Landmarks Preservation Commission

November 23rd, 2021
Public Hearing

The current proposal is:

Preservation Department – Item 3, LPC-22-00769

396 West Street – Weehawken Street Historic District

Borough of Manhattan

To Testify Please Join Zoom

Webinar ID: 823 3172 5442
Passcode: 915898

By Phone:

1 646-558-8656

US (New York) 877-853-5257 (Toll free)

US 888 475 4499 (Toll free)

Note: If you want to testify on an item, join the Zoom webinar at the agenda's "Be Here by" time (about an hour in advance). When the Chair indicates it's time to testify, "raise your hand" via the Zoom app if you want to speak (*9 on the phone). Those who signed up in advance will be called first.

Public Hearing Presentation

396 West Street, New York, NY

Community Board 2
Landmarks Preservation Commission

MANCINI:

Project Introduction

Project Introduction

Building Aerial View

Project Introduction

Building and the Weehawken Street Historic District

Corner at West Street and West 10th Street

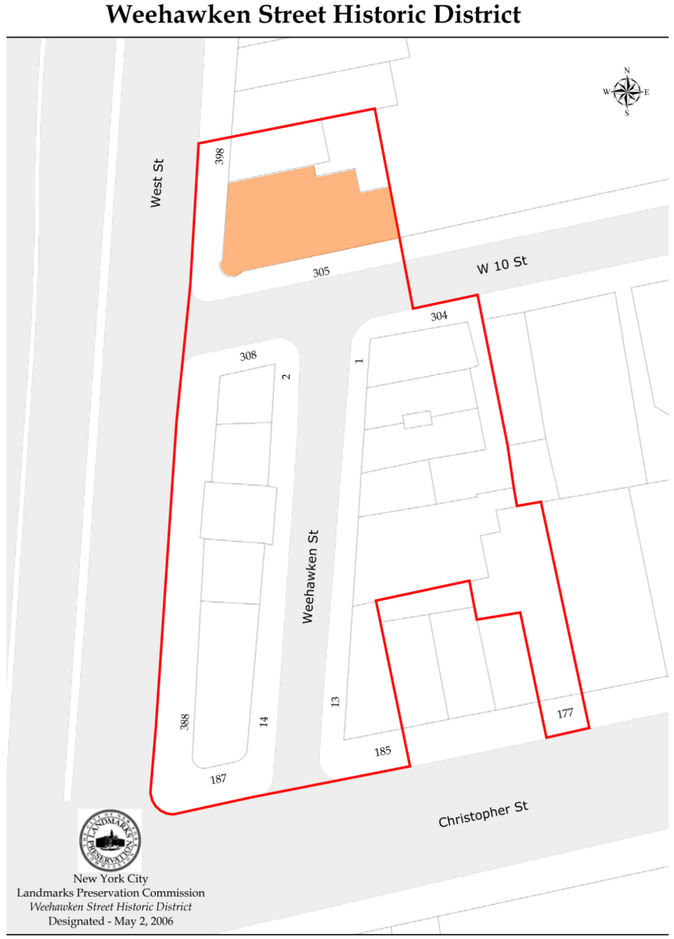

NYC LPC Designation Report

MANCINI

Project Introduction

Zoning Information

ZONING COMPUTATIONS

LOCATION: 396 WEST STREET NEW YORK, NY 10014 BLOCK: 636 LOT: 41
AKA: 305 WEST 10TH STREET BIN#: 1011987 ZIP: 10014

ZONING DISTRICT: C1-6A MAP #: 12A LANDMARK: YES
FLOOD ZONE: YES (AE) NAVD88 OF 1ST FL: 6.26' BFE / DFE: 12' / 13'
EXISTING # OF STORIES: 3 EXISTING HEIGHT: 37' - 2" YEAR BUILT: 1904

EXISTING OCCUPANCY: HOTEL - MOTEL (H4)
C. OF O: # 83406 DATED 03/07/1983

PROPOSED OCCUPANCY: COMMERCIAL BUILDING (RETAIL / OFFICES) - U.G.: 6

EXISTING LOT AREA: 3,612.00 SF

BULK REGULATIONS:

MAXIMUM ALLOWABLE FAR: 2.00 ZR 33 - 122

MAXIMUM ALLOWABLE FLOOR AREA:
COMMERCIAL USES: 3612.00 SF X 2.00 = 7224.00 SF

EXISTING FLOOR AREA: 10,112 SF (6,514 SF WITHOUT 1SF FLOOR) EXISTING NON-COMPLYING

PROPOSED FLOOR AREA: 8,192 SF

NOTE: EXISTING 1ST FLOOR IS 51% UNDER DFE, CONSIDERED PART OF CELLAR AND THUS ONLY A 2 STORY BUILDING FOR FAR PURPOSE. (ZR 64 - 11); FOR BUILDING CODE PURPOSES, 1ST FLOOR COUNT AS A STORY AND TOWARDS HEIGHT.

YARD REGULATIONS:

MINIMUM REQUIRED SIDE YARD: NONE ZR 33 - 25

EXISTING / PROPOSED SIDE YARDS: NONE COMPLIES

MINIMUM REQUIRED REAR YARD: NONE ZR 33 - 26

EXISTING / PROPOSED REAR YARD: NONE COMPLIES

HEIGHT AND SETBACK REGULATIONS: ZR 33 - 432
INITAL SETBACK ABOVE MAX. HEIGHT OF FRONT WALL: 15'
MAX. HEIGHT OF FRONT WALL: 60' OR 4 STORIES

SKY EXPOSURE PLANE:
HEIGHT ABOVE STREET: 60' ZR 33 - 26
SLOPE: 5.6 VERTICAL TO 1.0 HORIZONTAL

EXISTING / PROPOSED HEIGHT AND SETBACK: SEE PLOT DIAGRAM

PARKING REGULATIONS: ZR 36 – 2

PARKING REGULATIONS DO NOT APPLY SINCE THIS IS AN EXISTING BUILDING AND NOT A NEW DEVELOPMENT OR ENLARGEMENT.

EXISTING / PROPOSED PARKING: NONE COMPLIES

LOADING BERTH REQUIREMENTS: NONE ZR 36 - 62 & ZR 36 - 63

EXISTING / PROPOSED CONDITIONS: NO EXISTING LOADING BERTHS AND NONE PROPOSED

NOTE: WE ARE SEEKING A WAIVER BASED ON ZR 36 - 65 WAIVER OF REQUIREMENTS FOR ALL ZONING LOTS WHERE ACCESS WOULD BE FORBIDDEN.

Zoning Computation

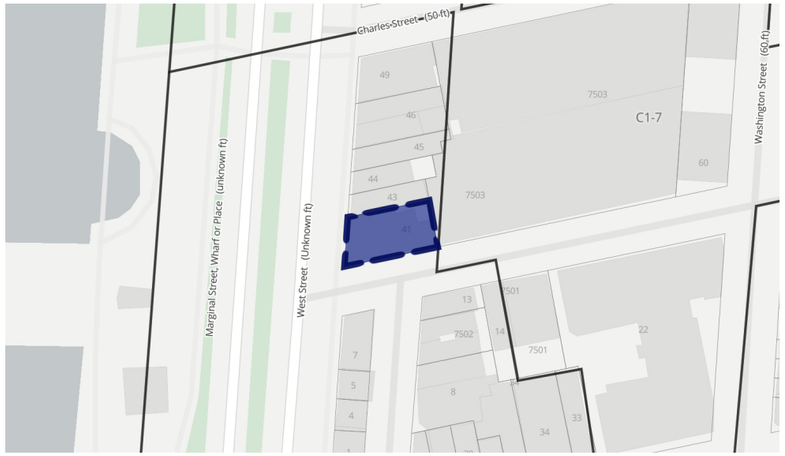

Zoning Plan from ZoLa

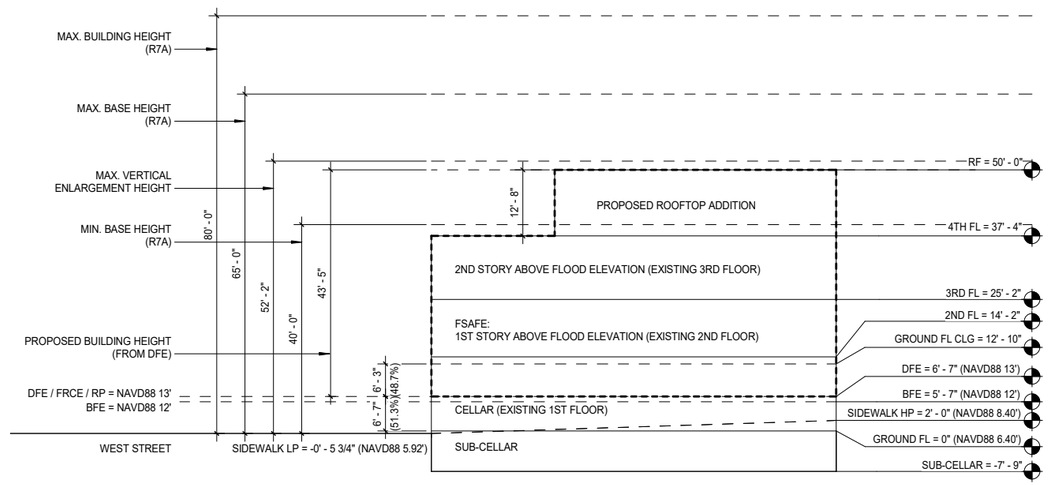

Zoning Section Diagram

MANCINI

Project Introduction

Goals & Objectives

To Make the Building Safer, Code Compliant, and Flood-Resilient

- ADA Compliant Access and Circulation
- Upgrades to Required Fire Ratings
- Upgrades MEP Systems
- Upgrades Fire Protection Systems
- Upgrades for Flood Resilience: Flood Barrier, Foundation Perimeter Enhancement, Foundation Structural Tie-down

To Restore the Building Envelope in Keeping with its Historic Design

- Facade Repair
- Repairs of Structural Issues on Facade
- Re-establish Historic Entrances
- Establish a New Contemporary Uniformity to the Ground Level Storefront Inspired by Historic precedents

To Promote Wellness and Interior Comfort through Building Upgrades

- Increased Access to Fresh Air and Natural Light at the Rooftop Addition
- Increased Access to Fresh Air at New Roof Terrace
- Upgrades Mechanical Systems to Improve Interior Comfort

Project Goals

Building Improvements: Accessibility & Egress

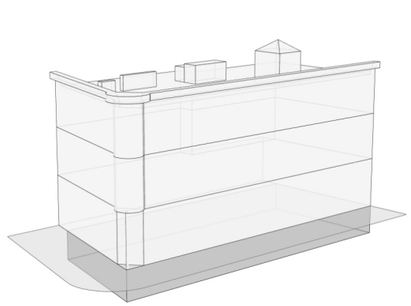

Existing Building

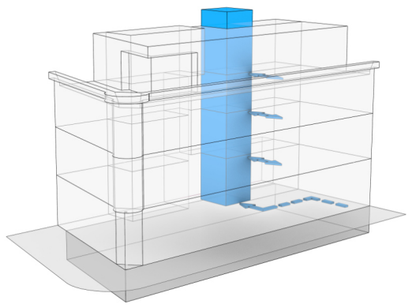

Accessibility Improvement 1:
ADA-Compliant Elevator

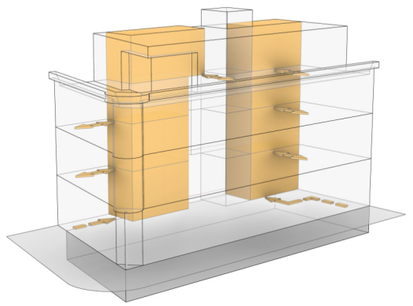

Accessibility Improvement 2:
New Stair Tower for Egress

Project Goals

Building Improvements: Flood Resilience

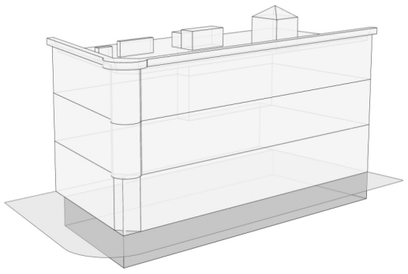

Existing Building

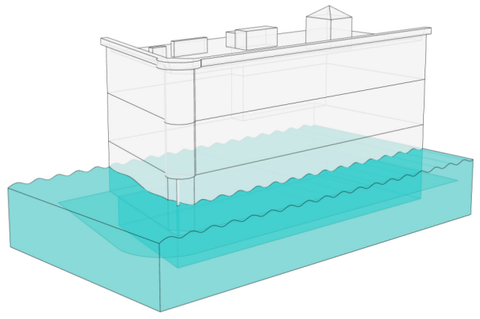

Existing Building:
Flood Condition

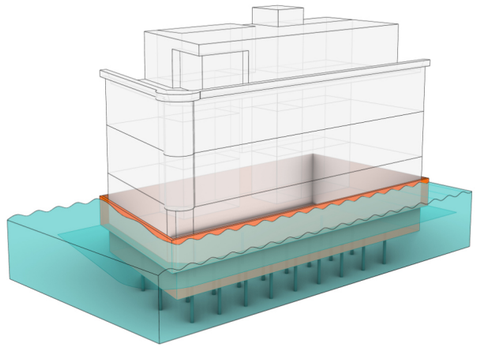

Flood Resilience Improvement:
Flood Barrier* + Foundation
Enhancement + Structural Tiedown

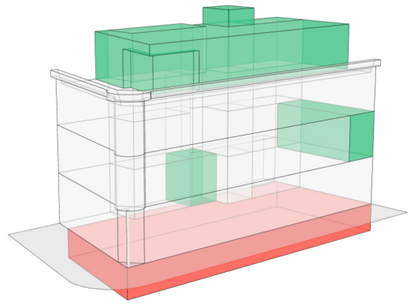

Building Services Redistribution:
Based on the NYC ZR and Building
Improvements

* See Page 111 for Flood Barrier Cutsheets, Specs, and Shop Drawings
* See Page 112 for Flood Barrier Sample Photos and Drawings

MANCINI

Building History

Building History

Building Facades Evolution

Building Timeline

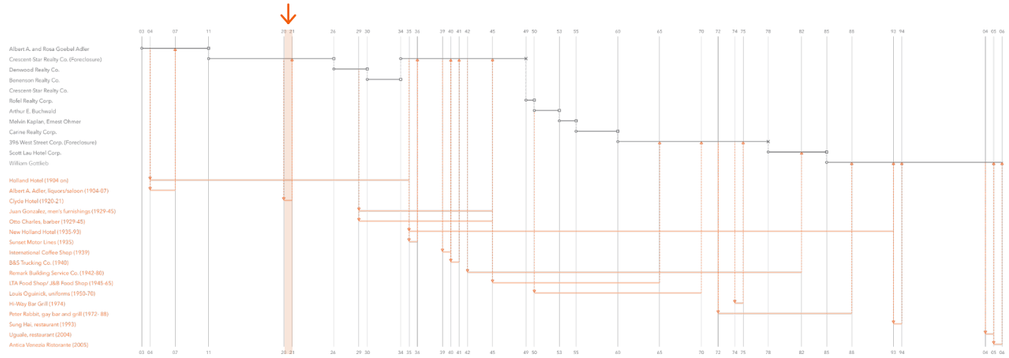

1920 (Museum of the City of New York)

Materials: Buff Brick, Terracotta (Painted*), Pressed Metal Cornice (Painted*), Wooden Door & Window Framing

* Presumed by Photos

MANCINI

Building History

Building Facades Evolution

Building Timeline

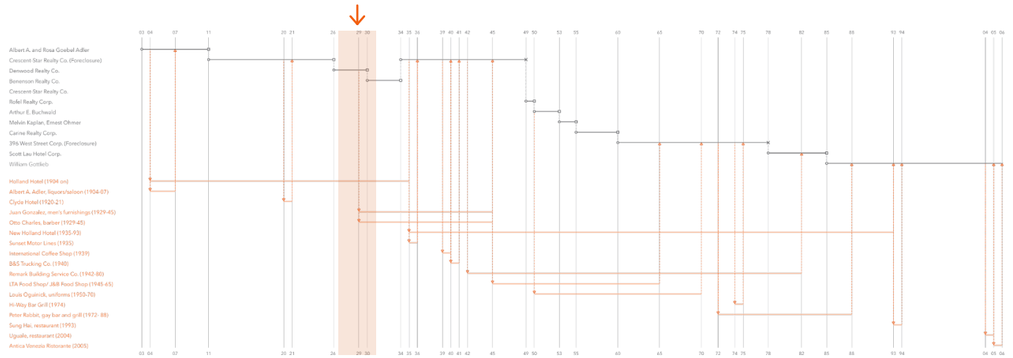

1927 (NYPL Digital Collection)

Materials: Buff Brick, Terracotta (Painted*), Pressed Metal Cornice (Painted*), Wooden Door & Window Framing

1932 (NYPL Digital Collection)

Materials: Buff Brick, Terracotta (Painted*), Pressed Metal Cornice (Painted*), Wooden Door & Window Framing

* Presumed by Photos

MANCINI:

Building History

Building Facades Evolution

Building Timeline

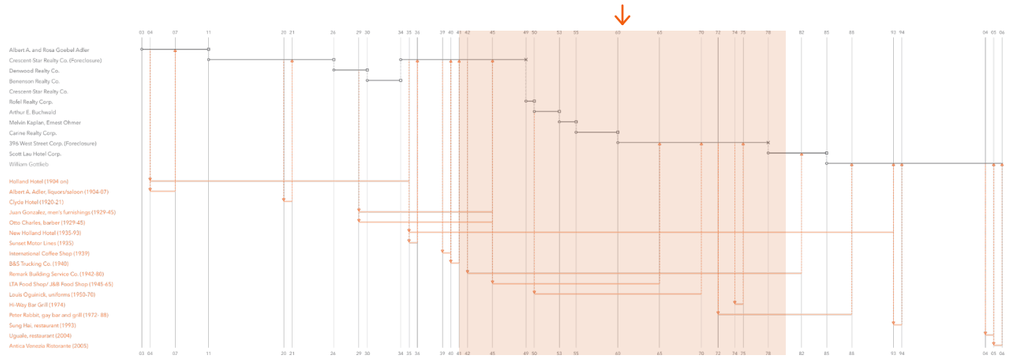

1941 (Tax Photo)

Materials: Buff Brick (Painted*), Terracotta (Painted*), Pressed Metal Cornice (Painted*), Wooden Door & Window Framing

1980 (Tax Photo)

Materials: Buff Brick (Painted*), Terracotta (Painted*), Pressed Metal Cornice (Painted*), Metal Door & Window Framing

* Presumed by Photos

MANCINI:

Building History

Building Facades Evolution

2021 (Current Condition)

Materials: Buff Brick (Painted), Terracotta (Painted), Pressed Metal Cornice (Painted), Aluminum Door & Window Framing

MANCINI

Building History

Existing Facade - South (Google Maps 2019)

South Facade (2019)

MANCINI

Building History

Existing Facade - West (Google Maps 2019)

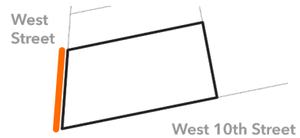

West Facade (2019)

MANCINI

Concepts & Scope

Multi-Layered Elevation

MANCINI

Concepts & Scope

Overall Concepts

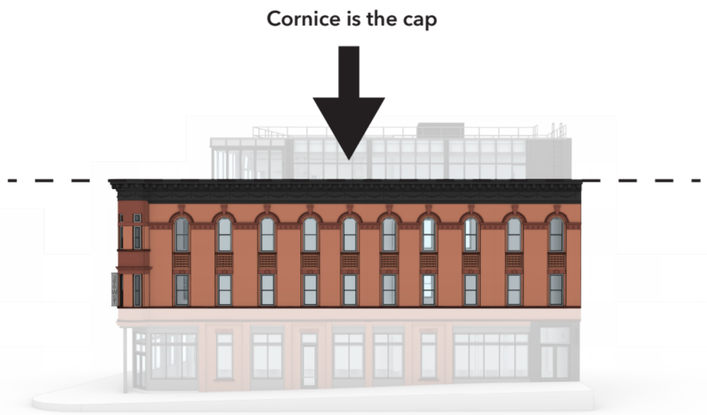

Historic Restoration*

* To the time it was designed (2004)

Historic Rehabilitation

Bring Consistent Identity to Ground Level

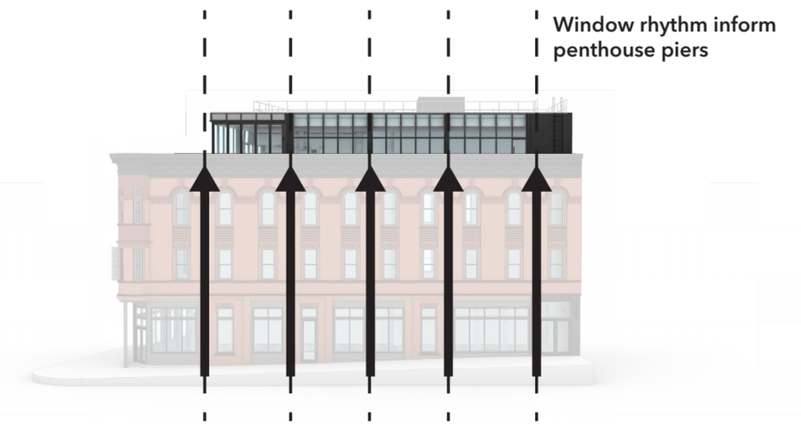

Contemporary Ties with Historic Context

MANCINI

Concepts & Scope

Facade Opening Study

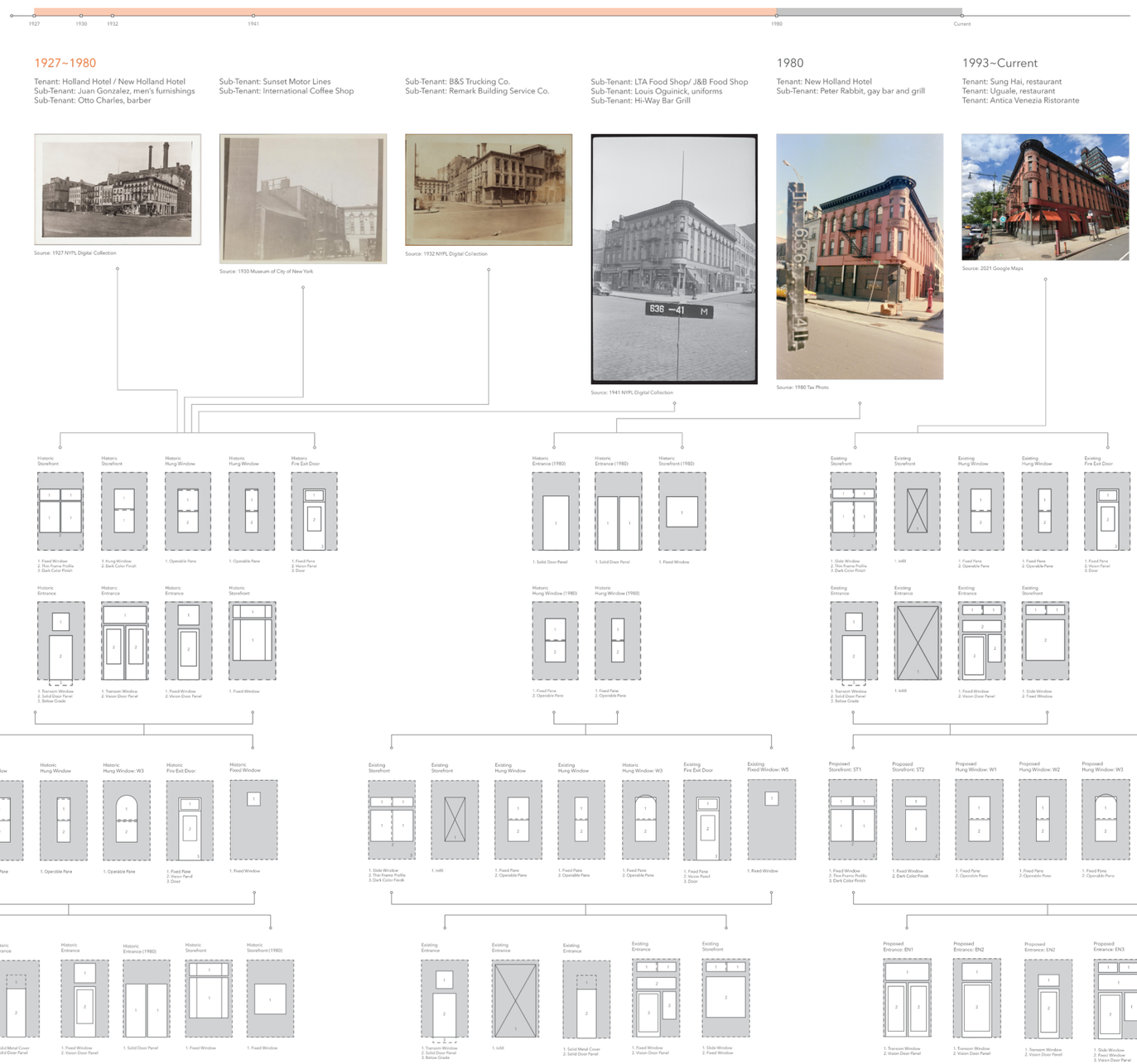

MANCINI

Concepts & Scope
Facade Opening Study

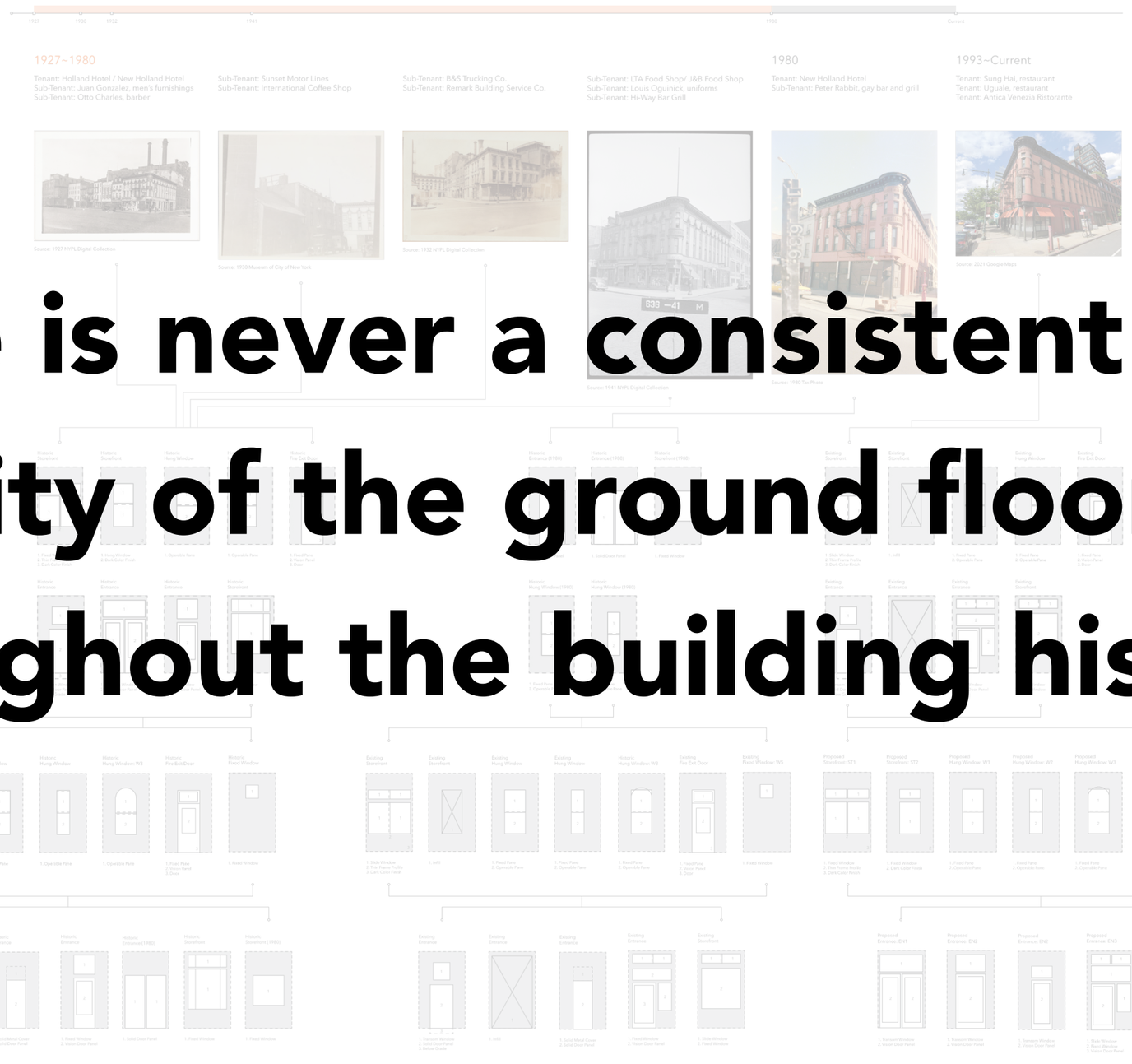

There is never a consistent identity of the ground floor throughout the building history.

MANCINI

Concepts & Scope

Typologies

punched window typologies

Concepts & Scope

Typologies

storefront typologies

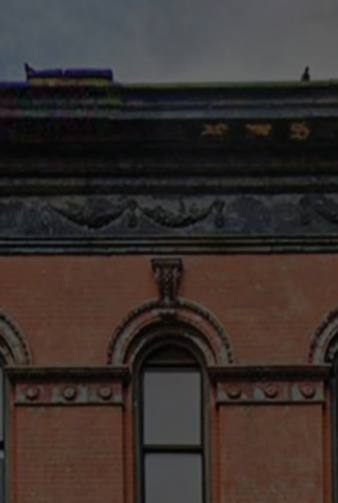

Concepts & Scope

Typologies

MANCINI

Concepts & Scope

Typologies

Concepts & Scope

From Southwest Corner

MANCINI

Concepts & Scope

Proposed Interventions - Axon

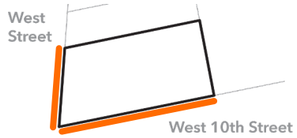

* See Page 88 for Masonry Cornice Coursing Details

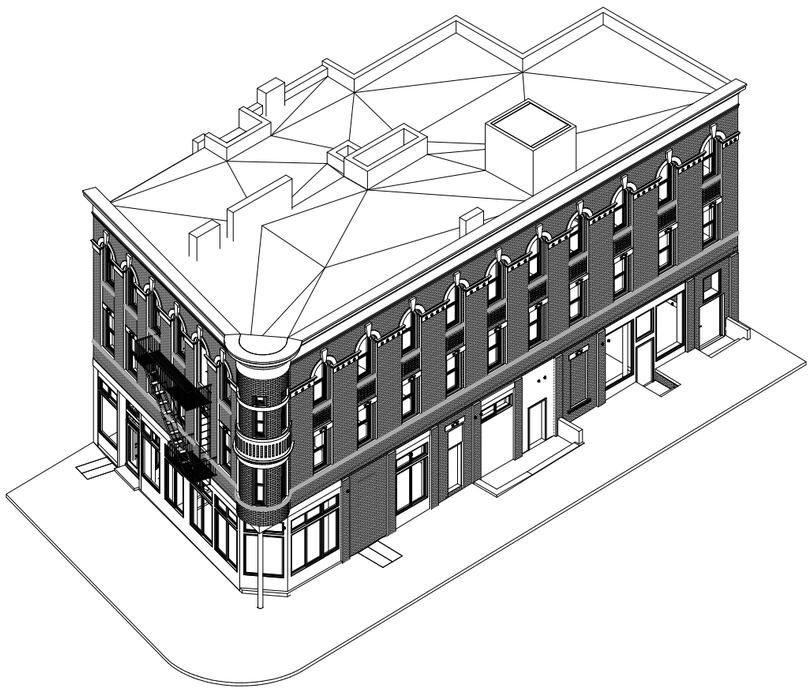

Existing Axon
(NTS)

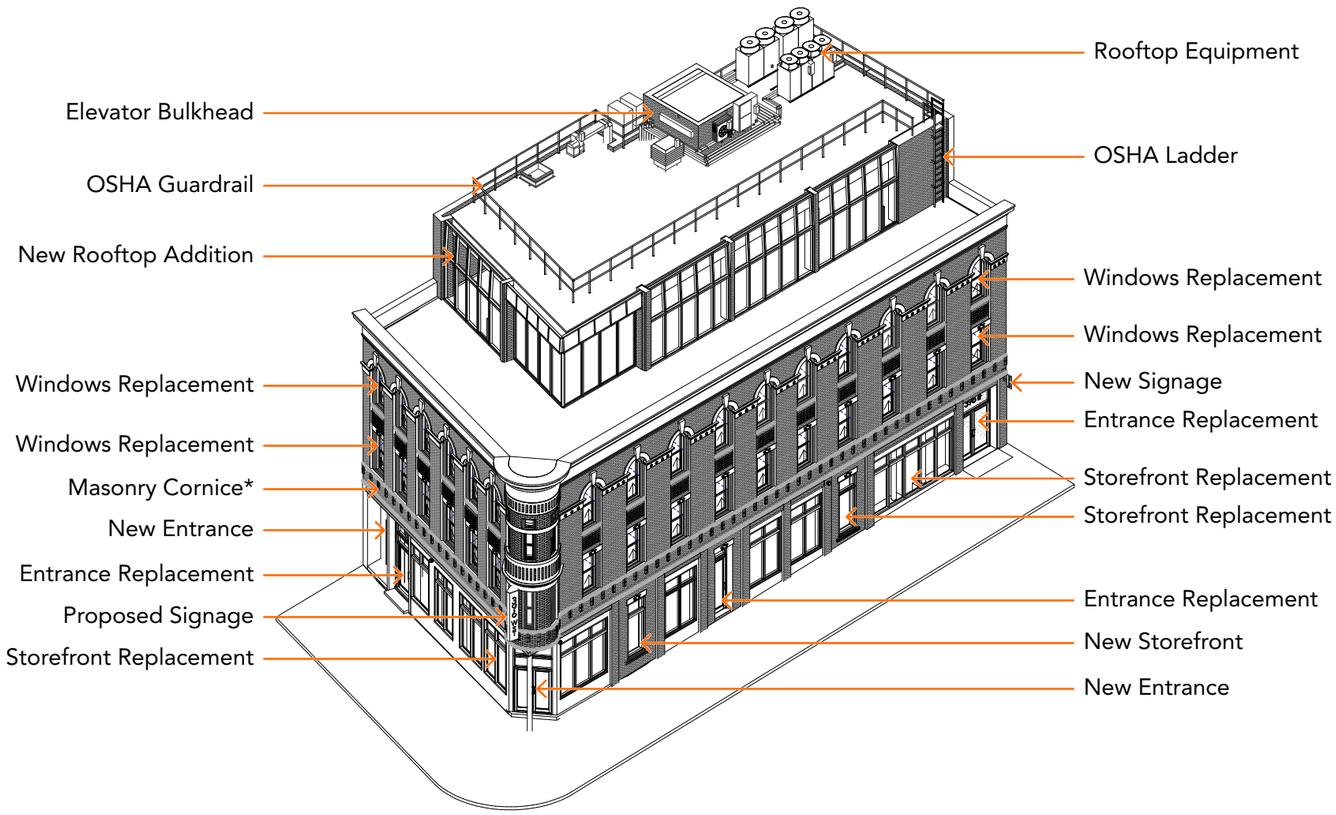

Proposed Axon
(NTS)

MANCINI:

Openings

Openings

Elevation Diagram - South

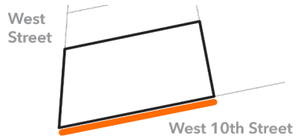

* See Page 77~81 for W1~W5 Staff-Level Work Details

MANCINI:

Openings

Elevation Diagram - West

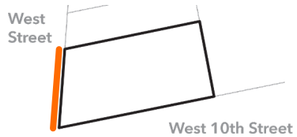

* See Page 77~81 for W1~W5 Staff-Level Work Details

MANCINI

Window

Historic/Existing/Proposed - ST1

Historic (1927/1941)

1932

ST1-Historic Is not Visible in the Historical Photo

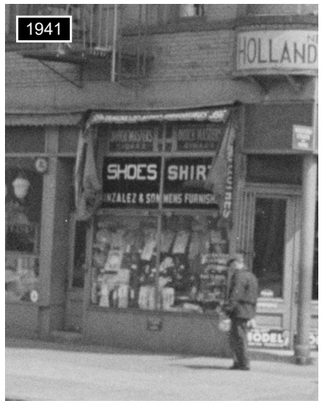

1980

ST1-Historic Is not Visible in the Historical Photo

Historic Storefront: ST1-Historic
(Photo)

Existing (2021)

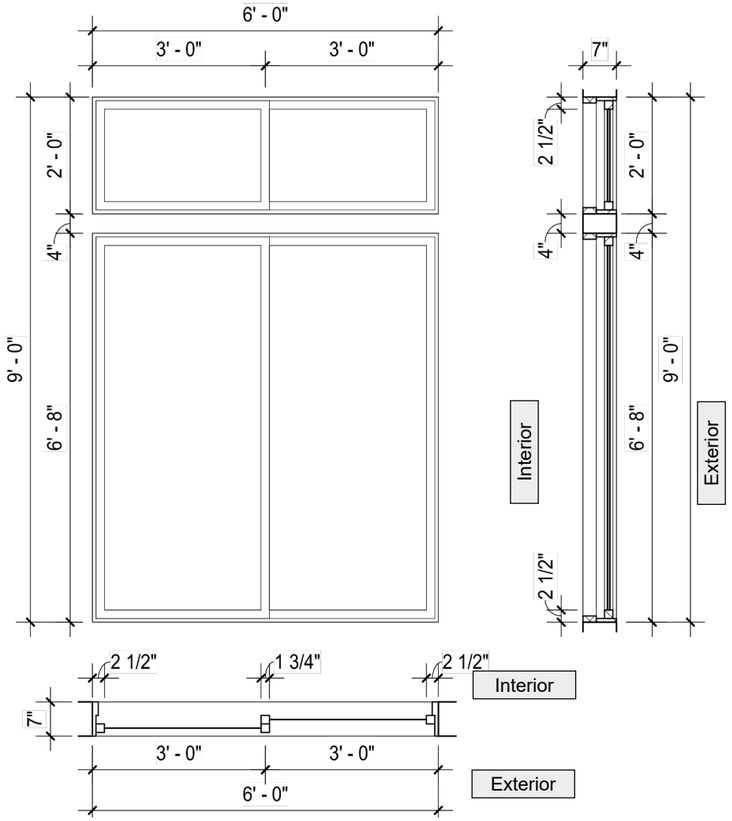

Existing Storefront: ST1-Existing
(3/8″ = 1′-0″)

Proposed

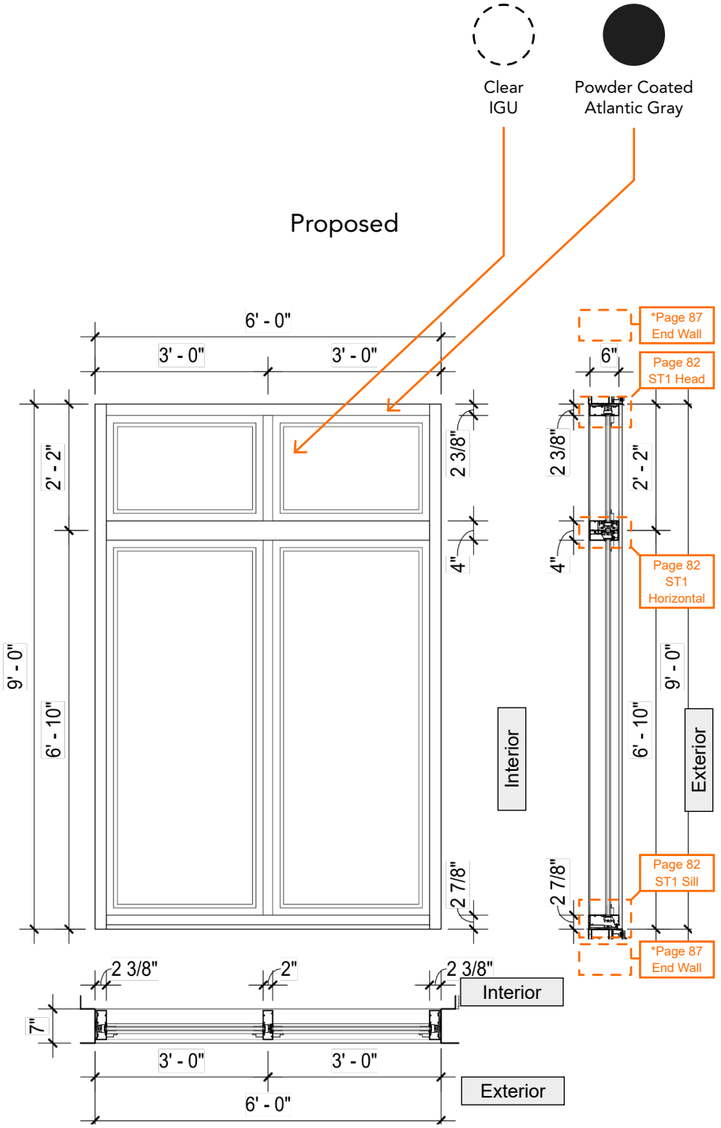

Proposed Storefront: ST1
(3/8″ = 1′-0″)

* See Page 87 for Details of New Metal Wall to Existing Structures
* See Page 87 for Metal Extrusion Detail

MANCINI

Window

Historic/Existing/Proposed - ST2

Historic (1927/1932/1941)

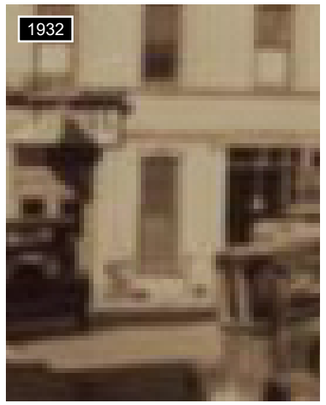

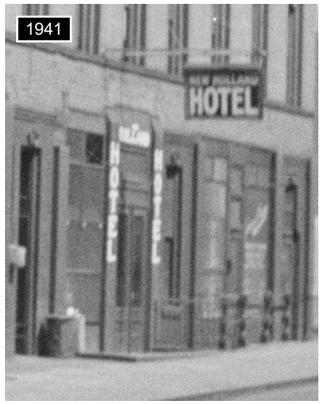

1980

ST2-Historic Is not Visible in the Historical Photo

Historic Storefront: ST2-Historic
(Photo)

Existing (2021)

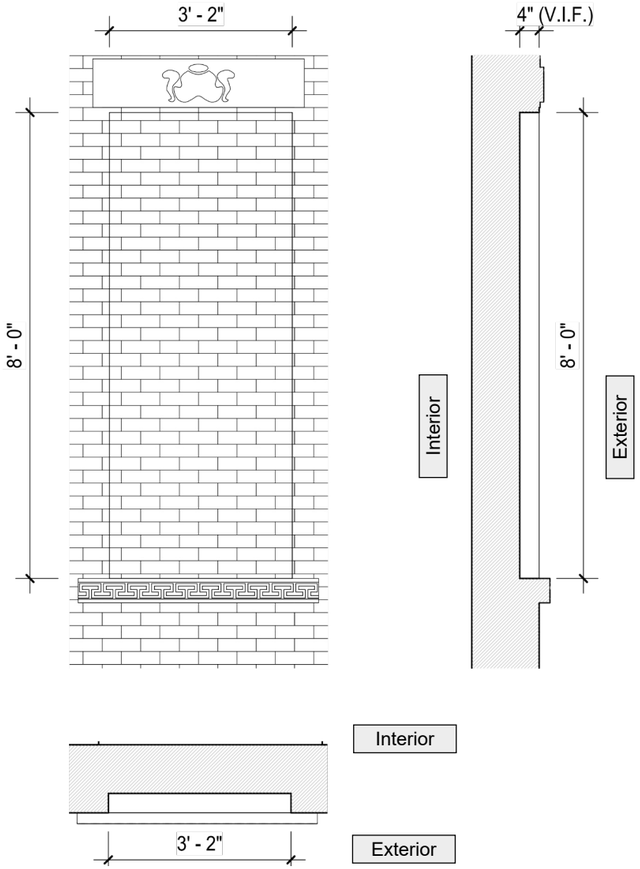

Existing Storefront: ST2-Existing
(3/8" = 1'-0")

Proposed

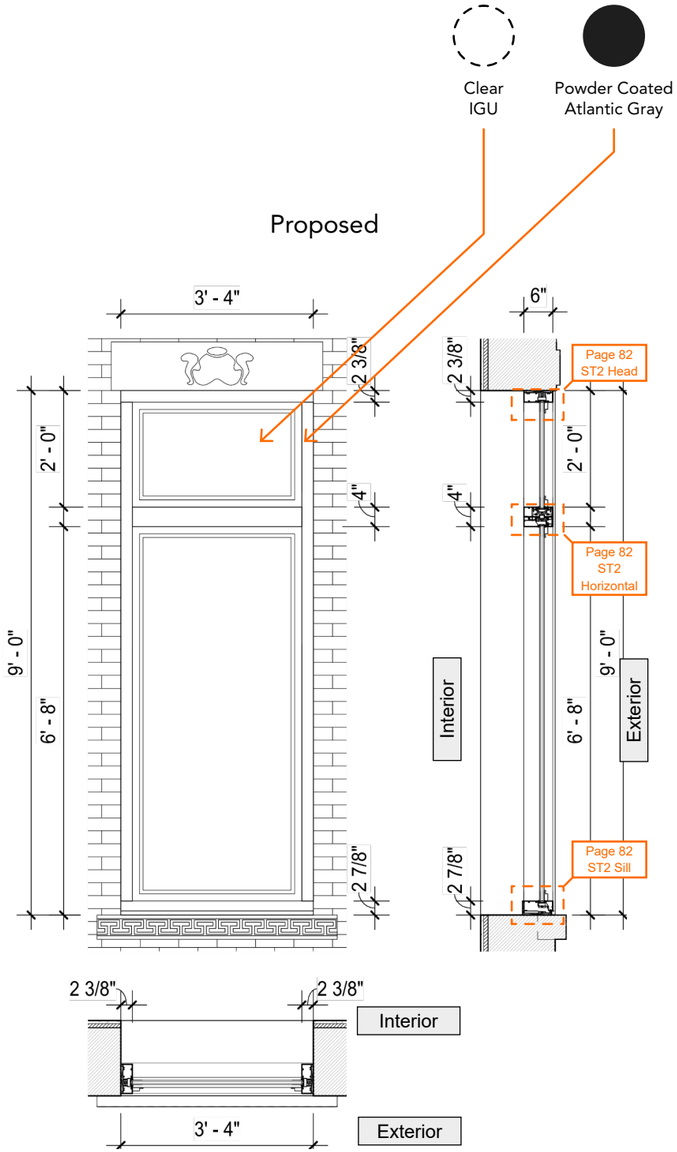

Proposed Storefront: ST2
(3/8" = 1'-0")

* See Page 87 for Metal Extrusion Detail

MANCINI

New Entrance

Historic/Existing/Proposed Drawings - EN1

Historic (1927/1932/1941)

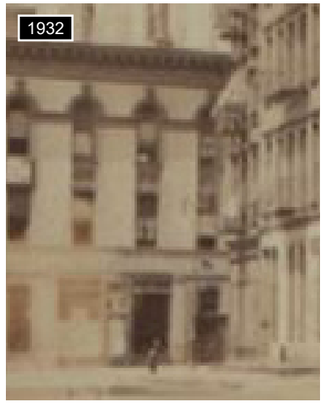

1980

EN1-Historic Is not Visible in the Historical Photo

Historic Entrance: EN1-Historic
(Photo)

Existing (2021)

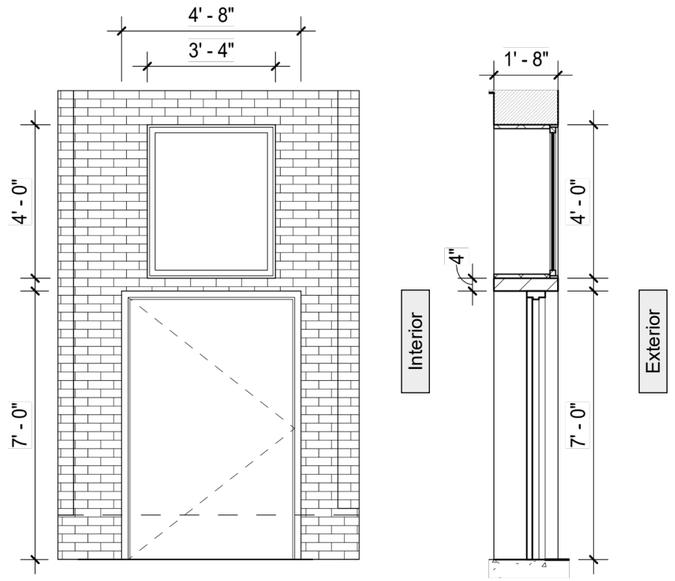

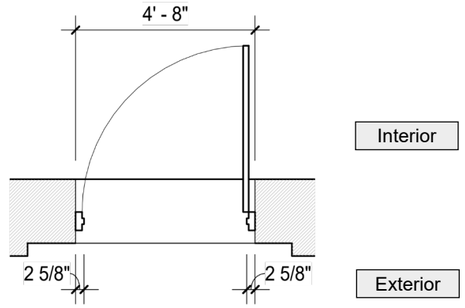

Existing Entrance: EN1-Existing
(1/4" = 1'-0")

Proposed

Clear IGU

Powder Coated Atlantic Gray

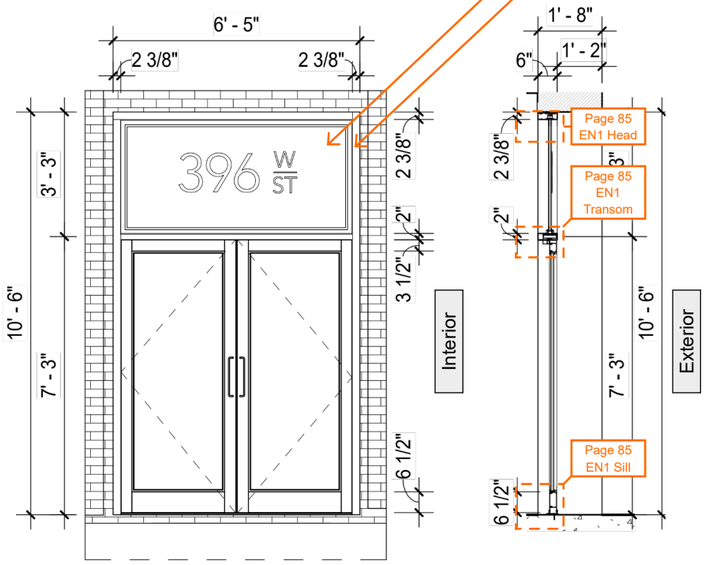

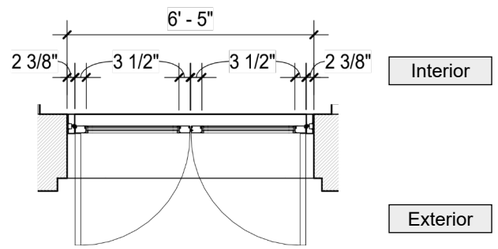

Proposed Entrance: EN1
(1/4" = 1'-0")

* Letter Signage on EN1 Is 17% of Glazed Area
* See Page 87 for Metal Extrusion Detail

MANCINI

New Entrance

Historic/Existing/Proposed Drawings - EN2

Historic (1927/1941/1980)

1932

EN2-Historic Is not Visible in the Historical Photo

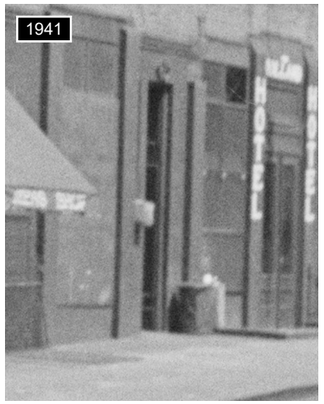

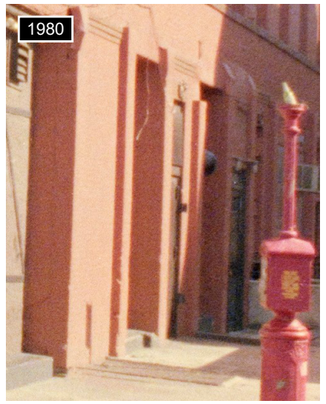

Historic Entrance: EN2-Historic
(Photo)

Existing (2021)

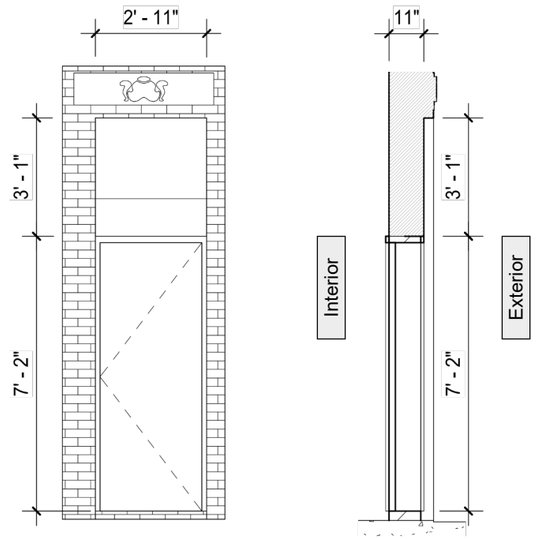

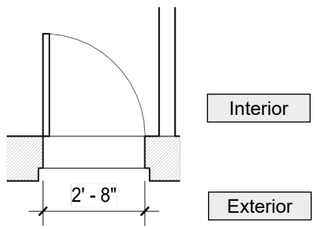

Existing Entrance: EN2-Existing
(1/4″ = 1′-0″)

Proposed

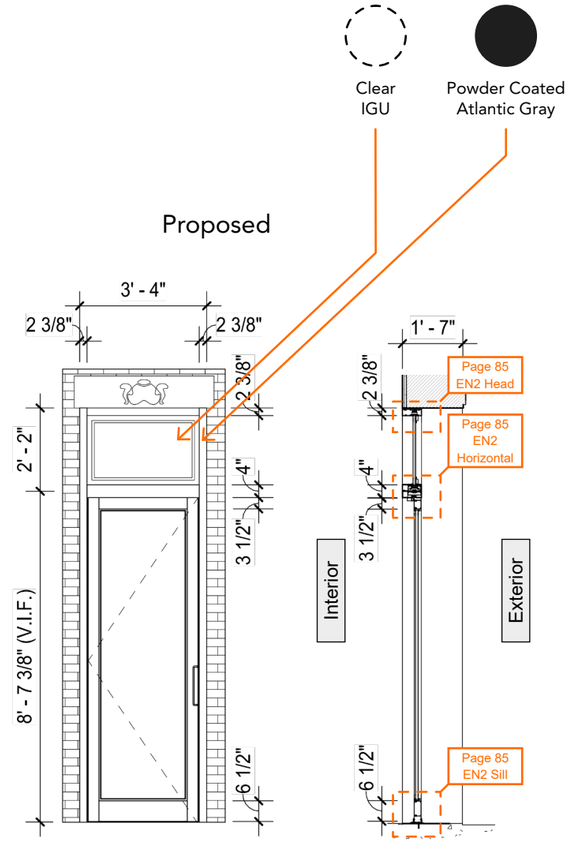

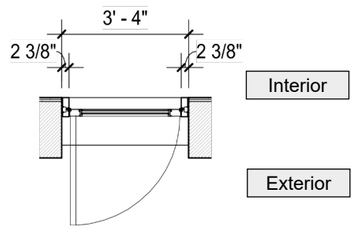

Proposed Entrance: EN2
(1/4″ = 1′-0″)

* See Page 87 for Metal Extrusion Detail

MANCINI:

New Entrance

Historic/Existing/Proposed Drawings - EN3

Historic (1927/1932/1941/1980)

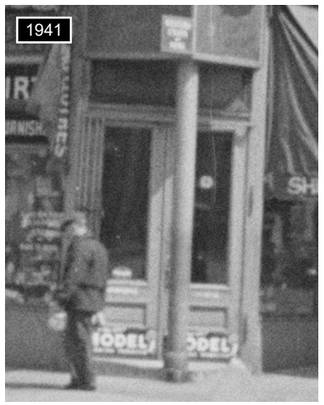

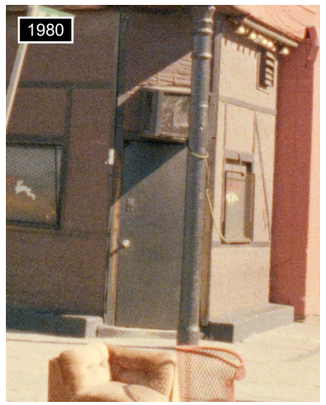

Historic Entrance: EN3-Historic
(Photo)

Existing (2021)

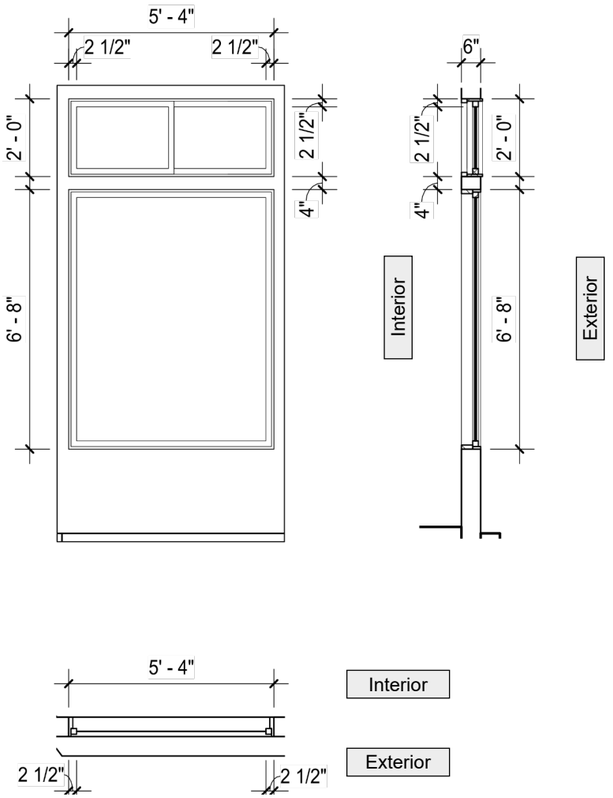

Existing Entrance: None
(1/4" = 1'-0")

Proposed

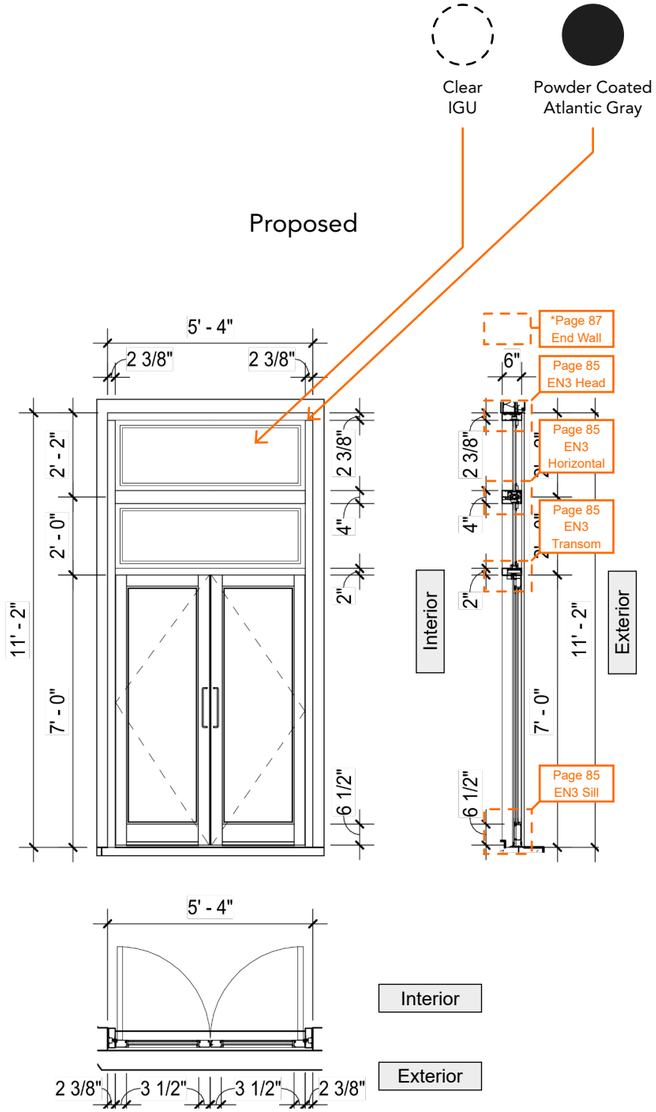

Proposed Entrance: EN3
(1/4" = 1'-0")

* See Page 87 for Details of New Metal Wall to Existing Structures
* See Page 87 for Metal Extrusion Detail

MANCINI

New Entrance

Historic/Existing/Proposed Drawings - EN4

Historic (1927/1941/1980)

1932

EN4-Historic Is not Visible in the Historical Photo

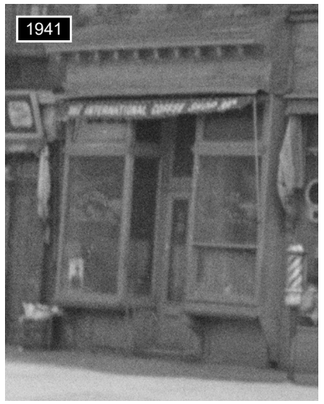

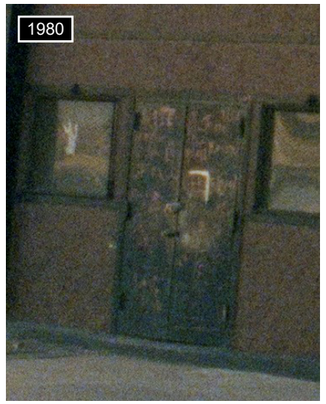

Historic Entrance: EN4-Historic
(Photo)

Existing (2021)

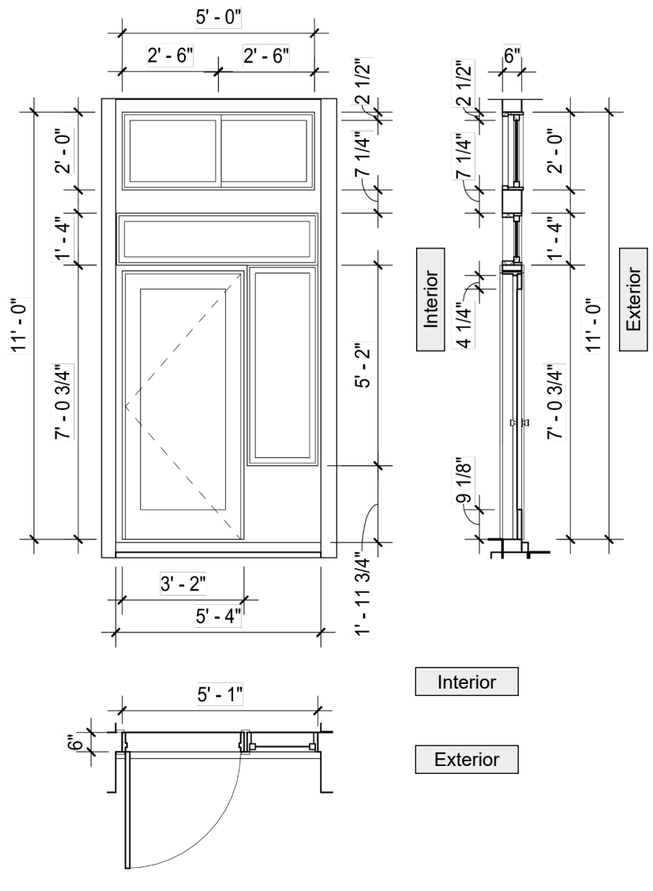

Existing Entrance: EN4-Existing
(1/4" = 1'-0")

Proposed

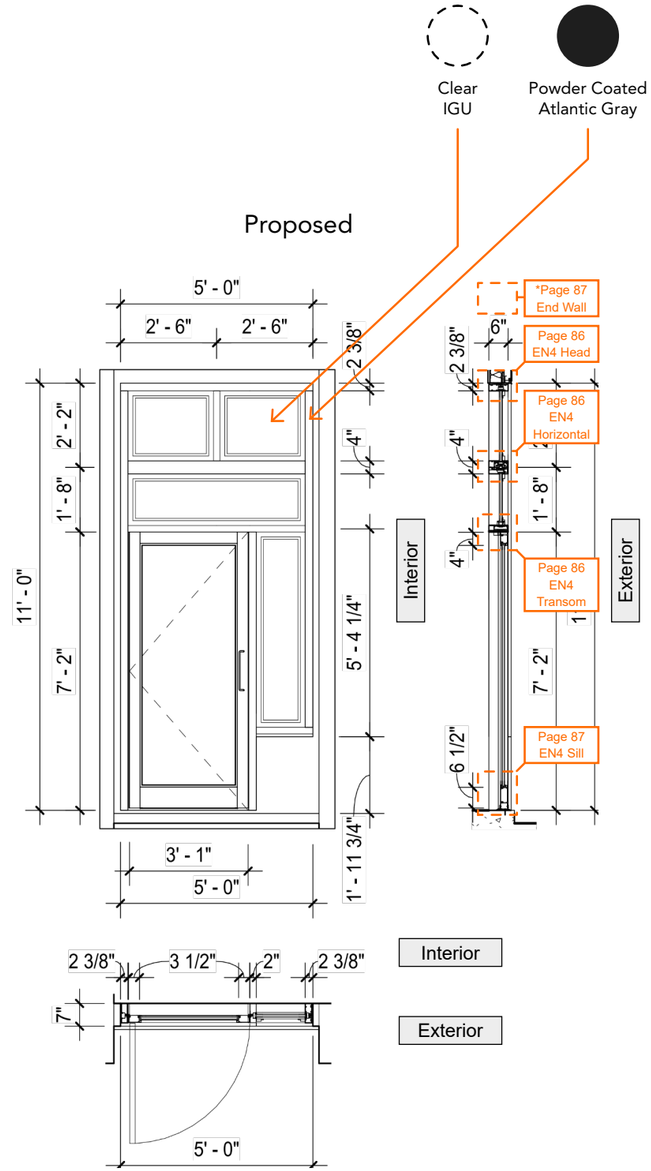

Proposed Entrance: EN4
(1/4" = 1'-0")

* See Page 87 for Details of New Metal Wall to Existing Structures
* See Page 87 for Metal Extrusion Detail

MANCINI:

New Entrance

Historic/Existing/Proposed Drawings - EN5

Historic (1927/1941/1980)

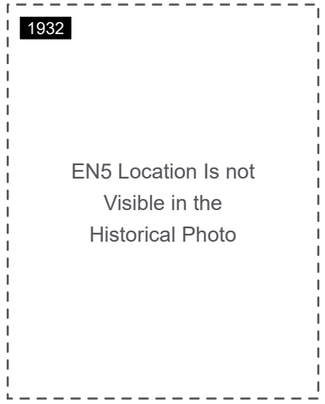

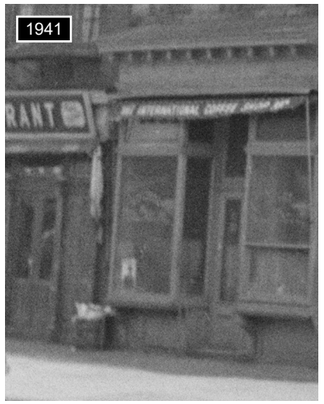

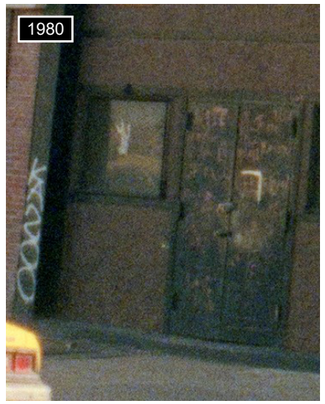

Historic Entrance: None
(Photo)

Existing (2021)

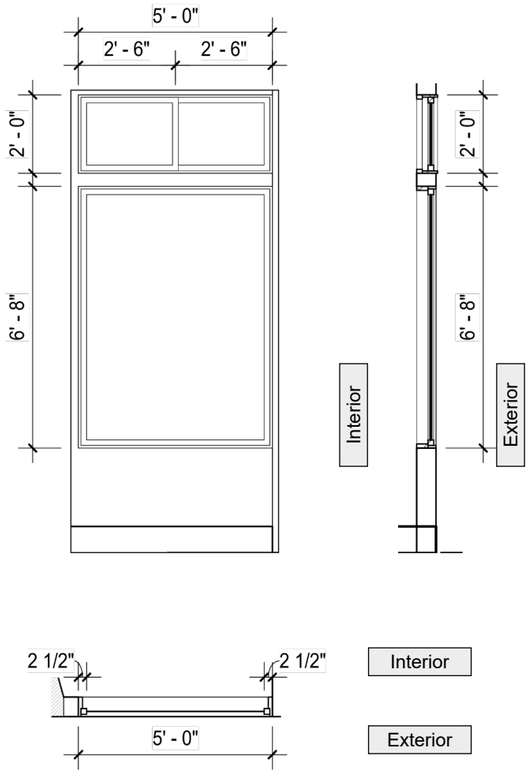

Existing Entrance: None
(1/4" = 1'-0")

Proposed

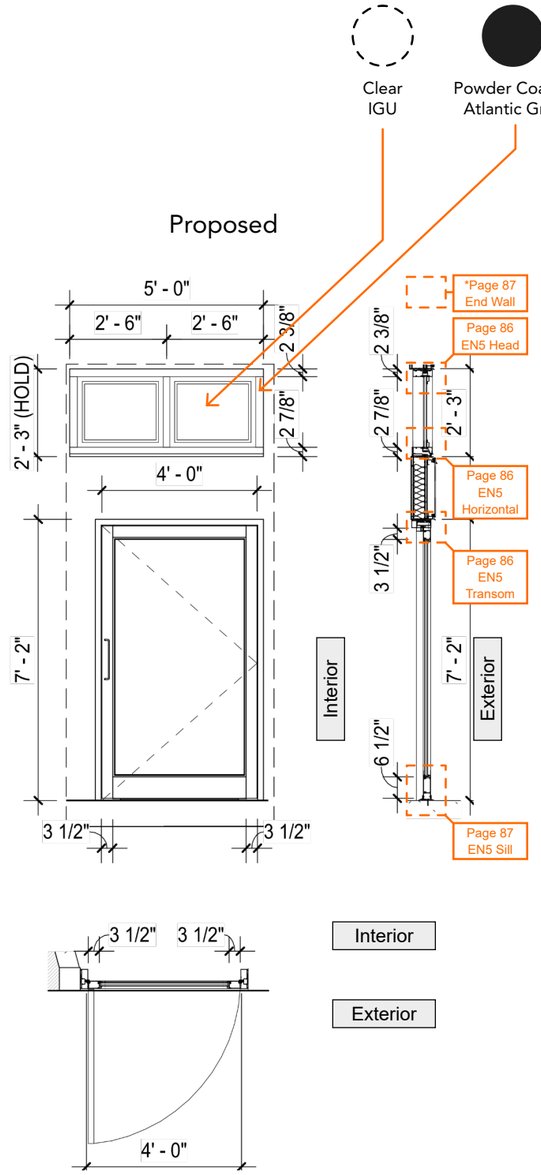

Proposed Entrance: EN5
(1/4" = 1'-0")

* See Page 87 for Details of New Metal Wall to Existing Structures
* See Page 87 for Metal Extrusion Detail

MANCINI:

Rooftop Addition

Rooftop Addition

Relevant Neighborhood Precedents

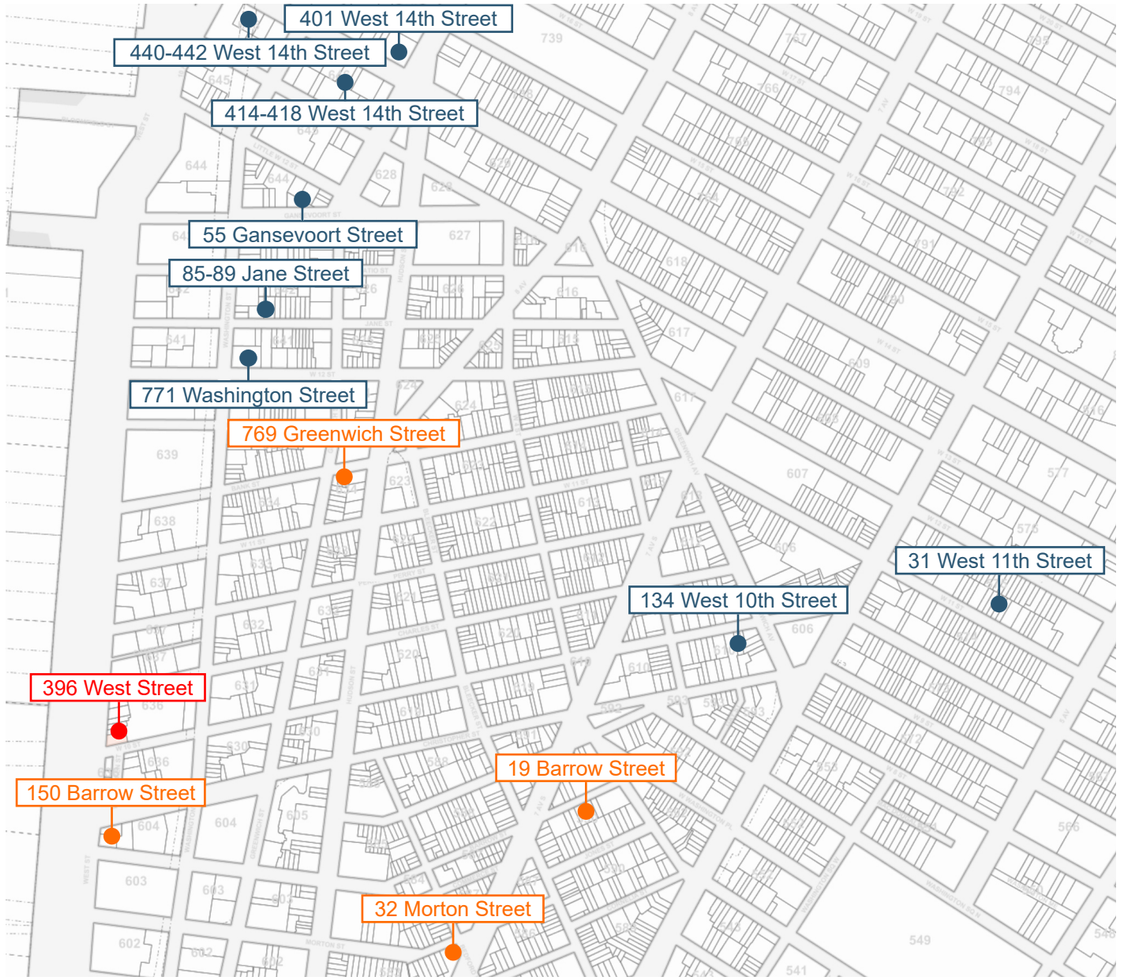

Neighborhood Map
(NTS)

769 Greenwich Street

19 Barrow Street

150 Barrow Street

32 Morton Street

MANCINI

Rooftop Addition

Relevant Neighborhood Precedents

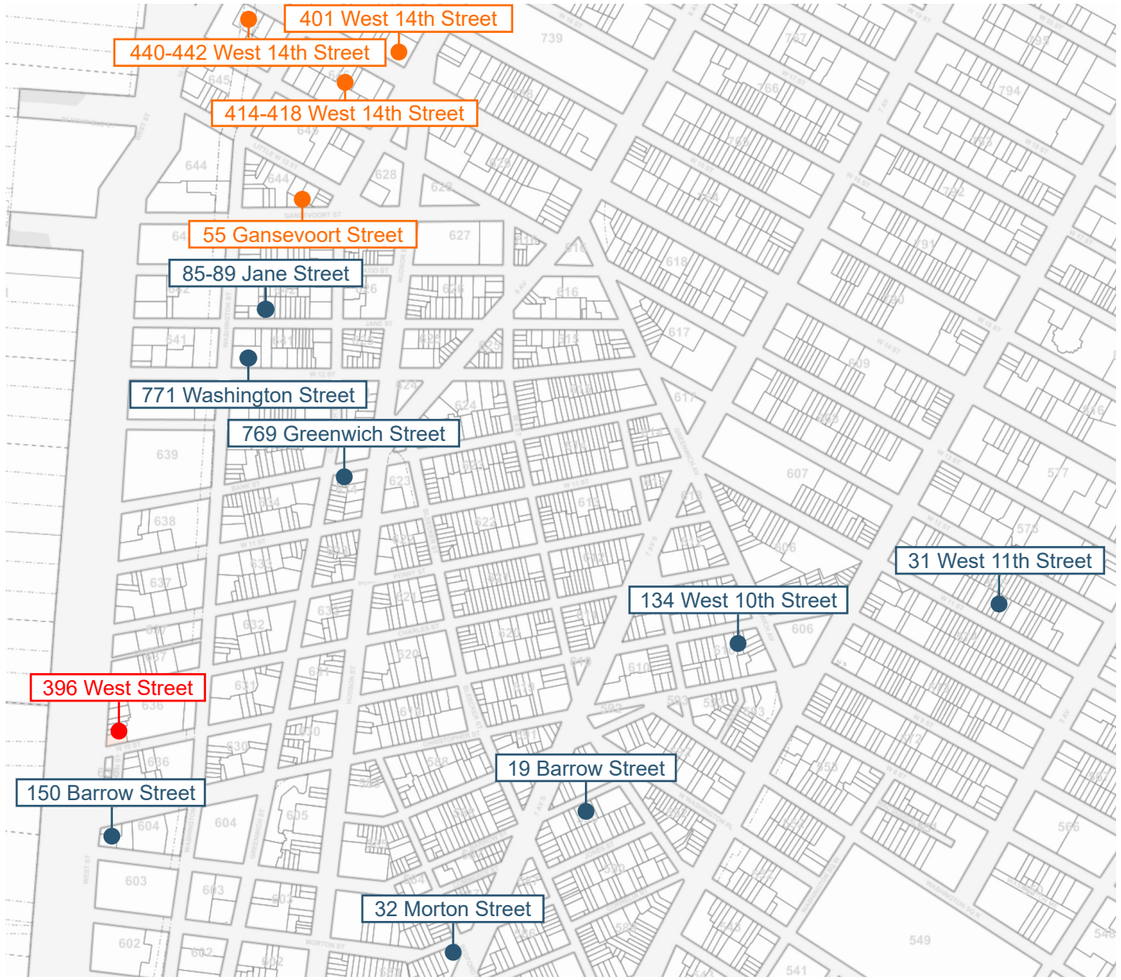

Neighborhood Map
(NTS)

440-442 West 14th Street

401 West 14th Street

55 Gansevoort Street

414-418 West 14th Street

MANCINI

Rooftop Addition

Relevant Neighborhood Precedents

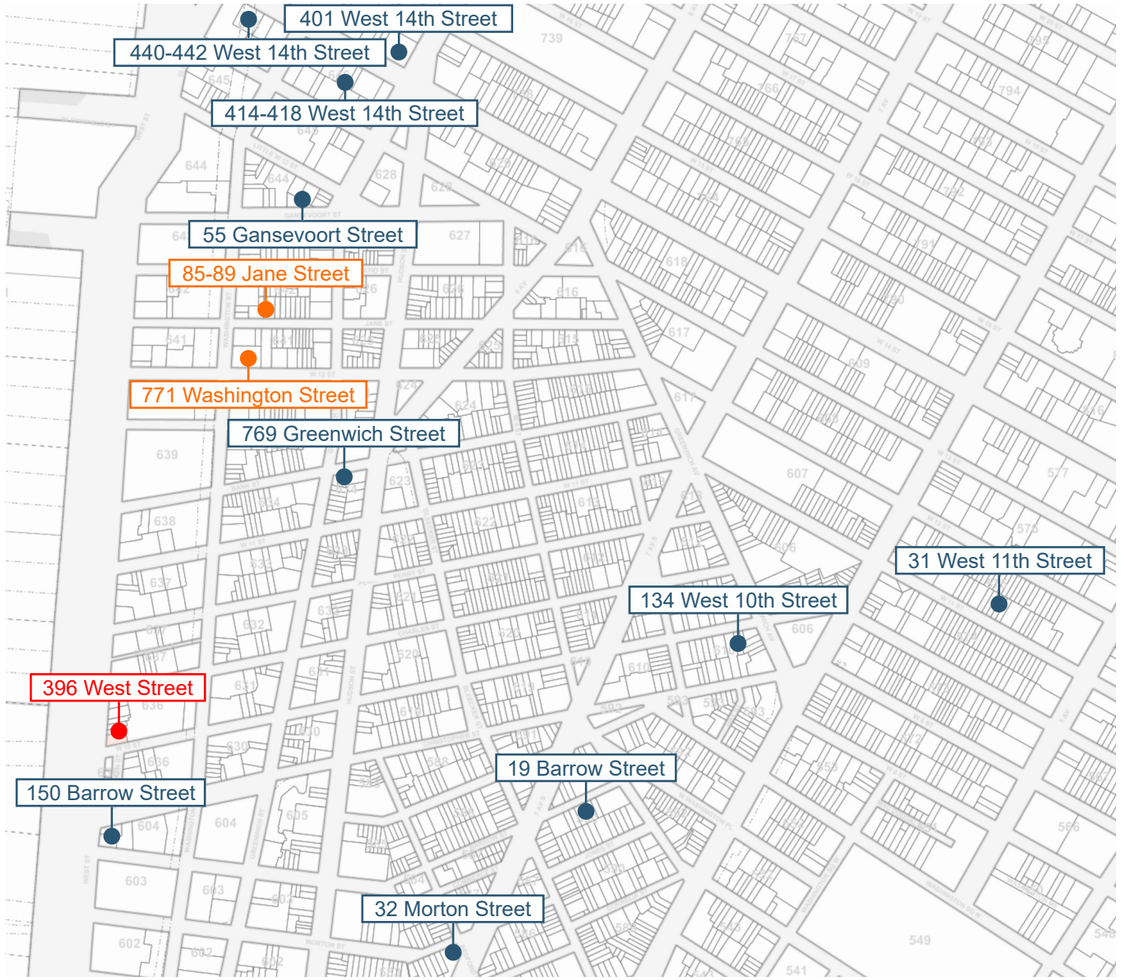

Neighborhood Map
(NTS)

85-89 Jane Street

771 Washington Street

MANCINI

Rooftop Addition

Relevant Neighborhood Precedents

Neighborhood Map
(NTS)

31 West 11th Street

134 West 10th Street

MANCINI:

Rooftop Addition

Relevant Neighborhood Precedents

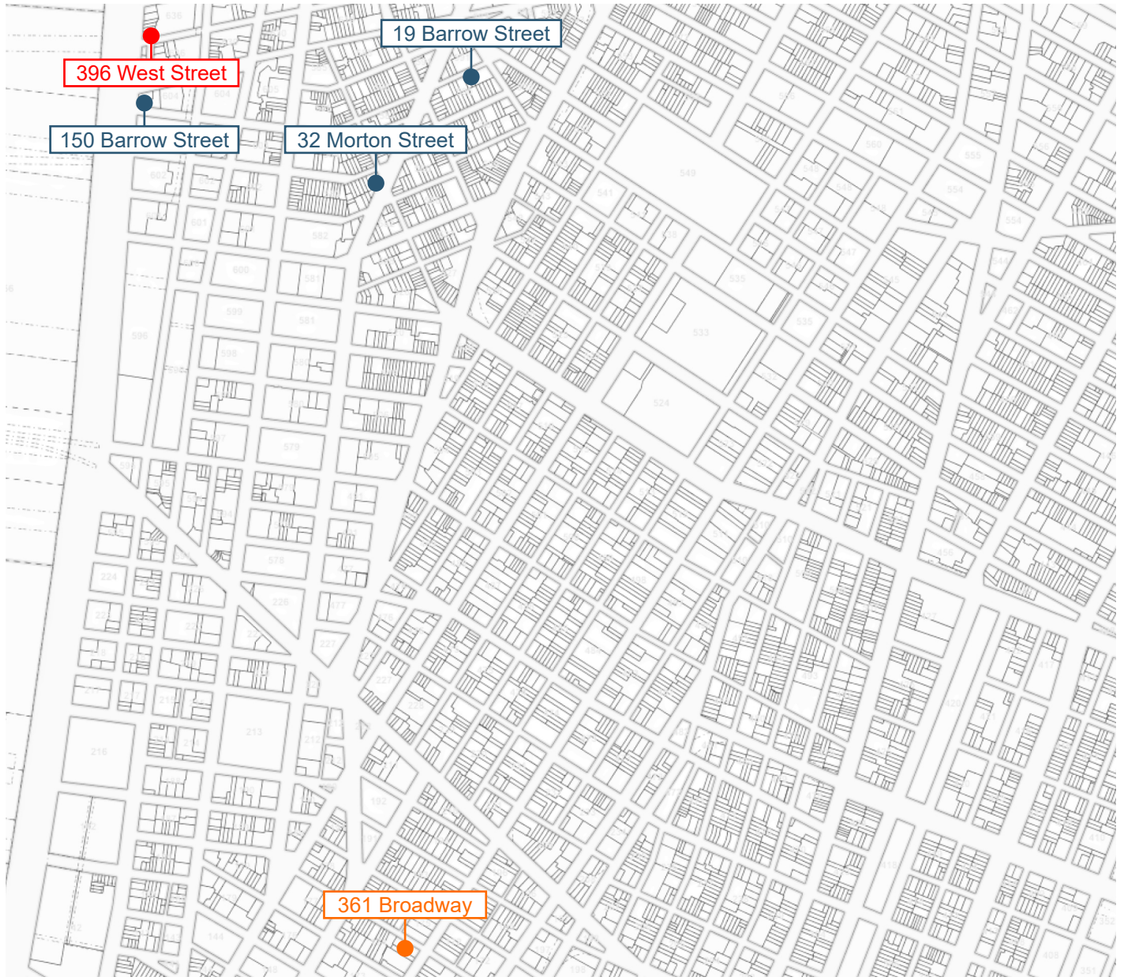

Neighborhood Map
(NTS)

361 Broadway

MANCINI:

Rooftop Addition

Proposed Design

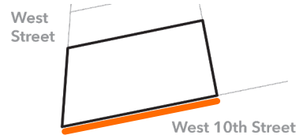

Kawneer 1620 SG
Curtain Wall System

75-Degree Open Corner
Folding Door

Elevator Bulkhead

OSHA Guardrail

OSHA Ladder

Existing Parapet

MANCINI:

Rooftop Addition

Proposed Design

MANCINI

Rooftop Addition

Proposed Design

MANCINI

Rooftop Addition

Proposed Design

MANCINI

Rooftop Addition

Proposed Design

MANCINI

Rooftop Addition

Proposed Design - Rendered Elevations

Rendered South Elevation
(NTS)

Rendered West Elevation
(NTS)

MANCINI

Rooftop Addition

Proposed Design - Whole Building Elevations

South Elevation - Whole Building
(NTS)

West Elevation - Whole Building
(NTS)

MANCINI:

Rooftop Addition

Proposed Design - Penthouse Elevations

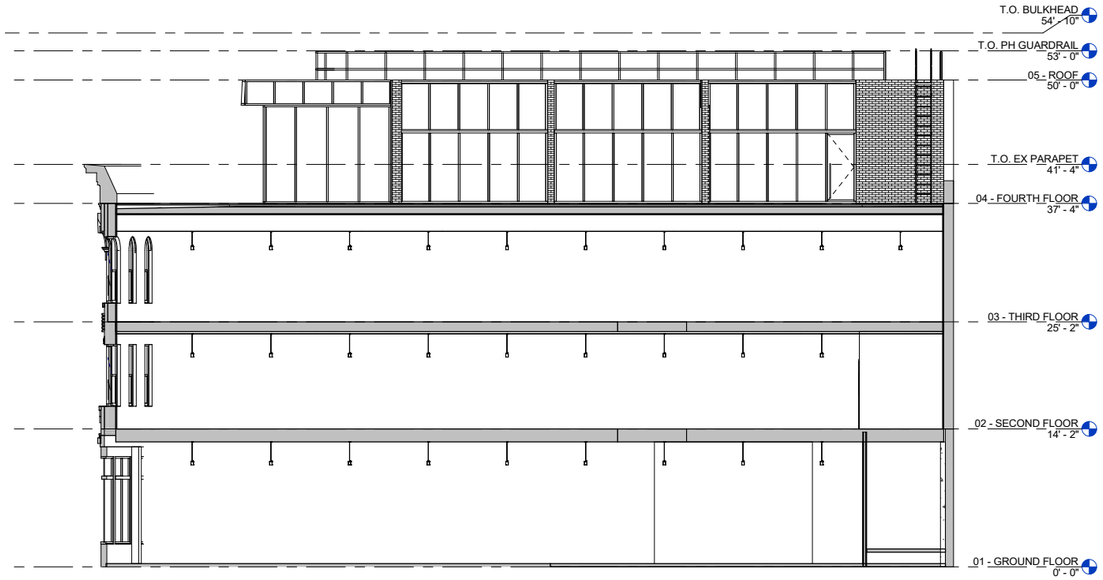

South Elevation - Penthouse Only
(NTS)

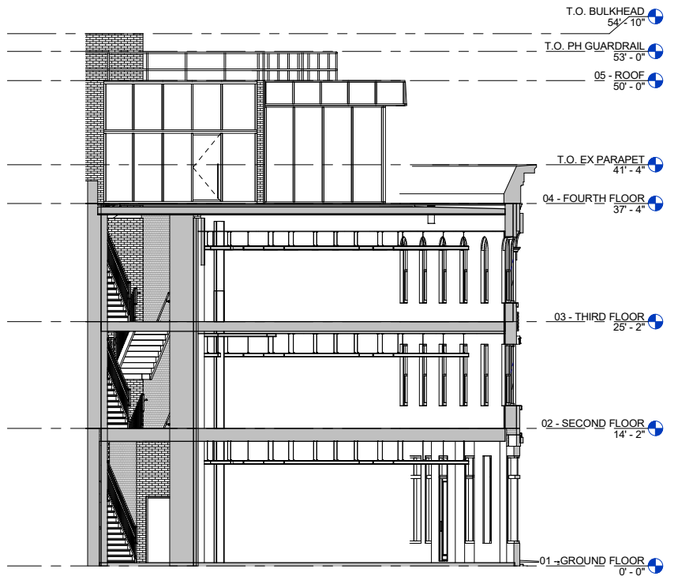

West Elevation - Penthouse Only
(NTS)

MANCINI

Rooftop Addition

Proposed Design - Overall Section

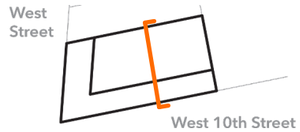

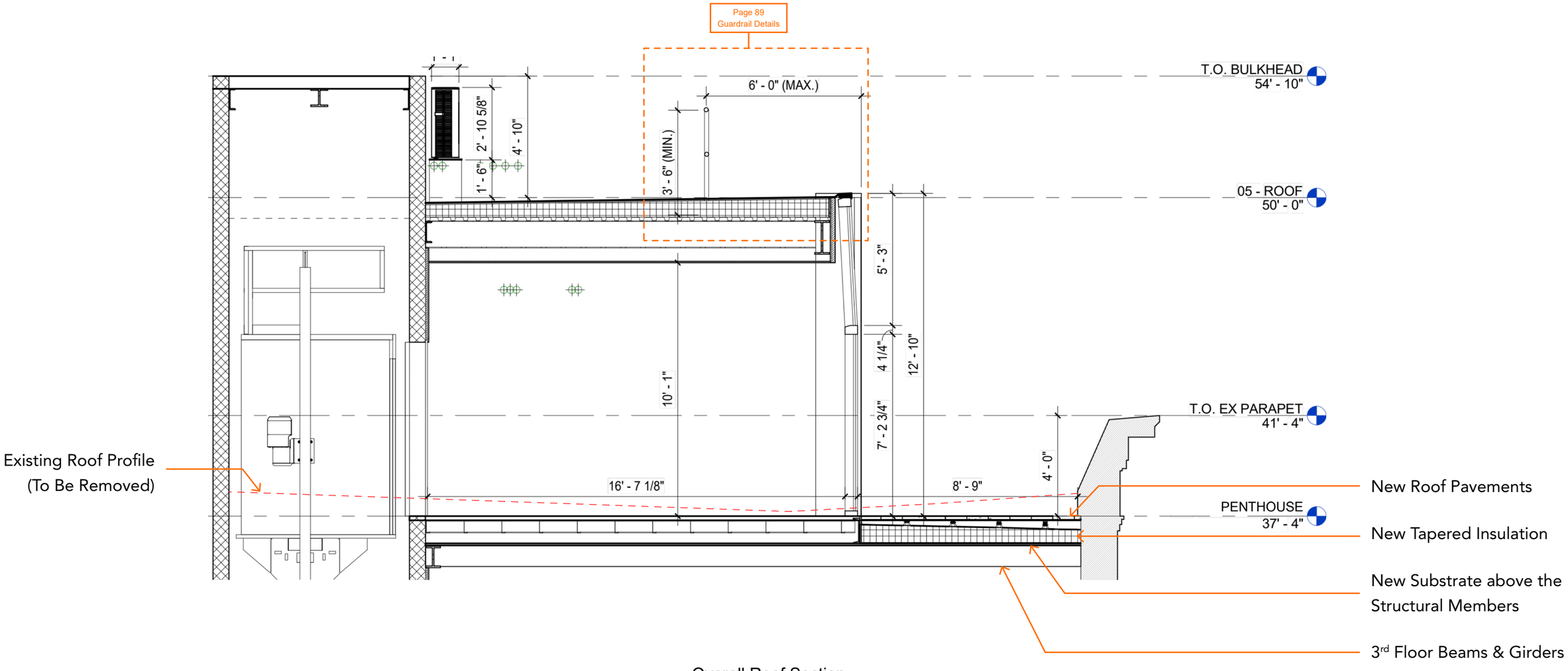

Overall Roof Section
(1/4" = 1'-0")

MANCINI

Rooftop Addition

Proposed Design - Equipment Axon

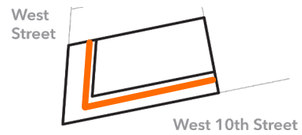

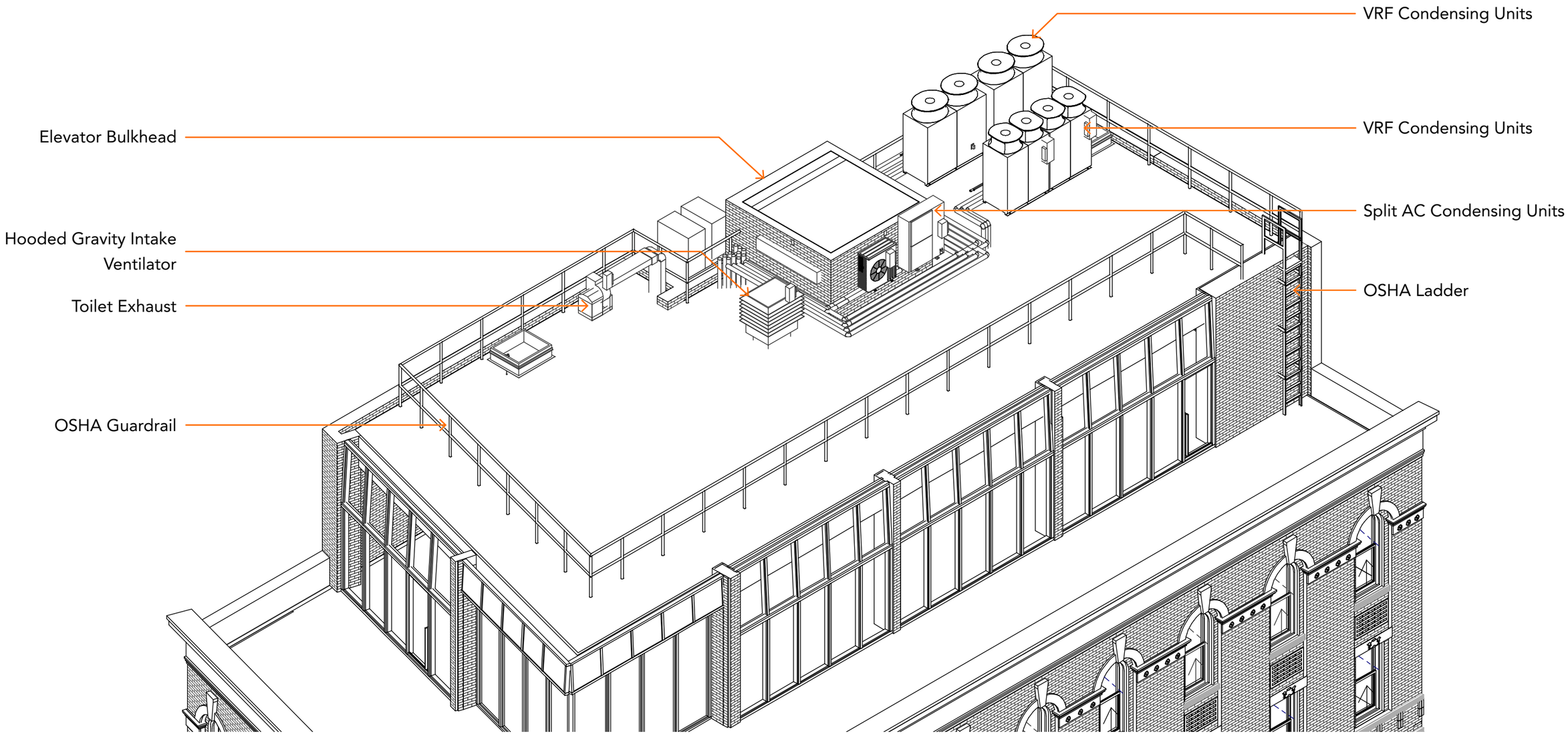

MANCINI

Rooftop Addition

Proposed Design - Equipment Plan

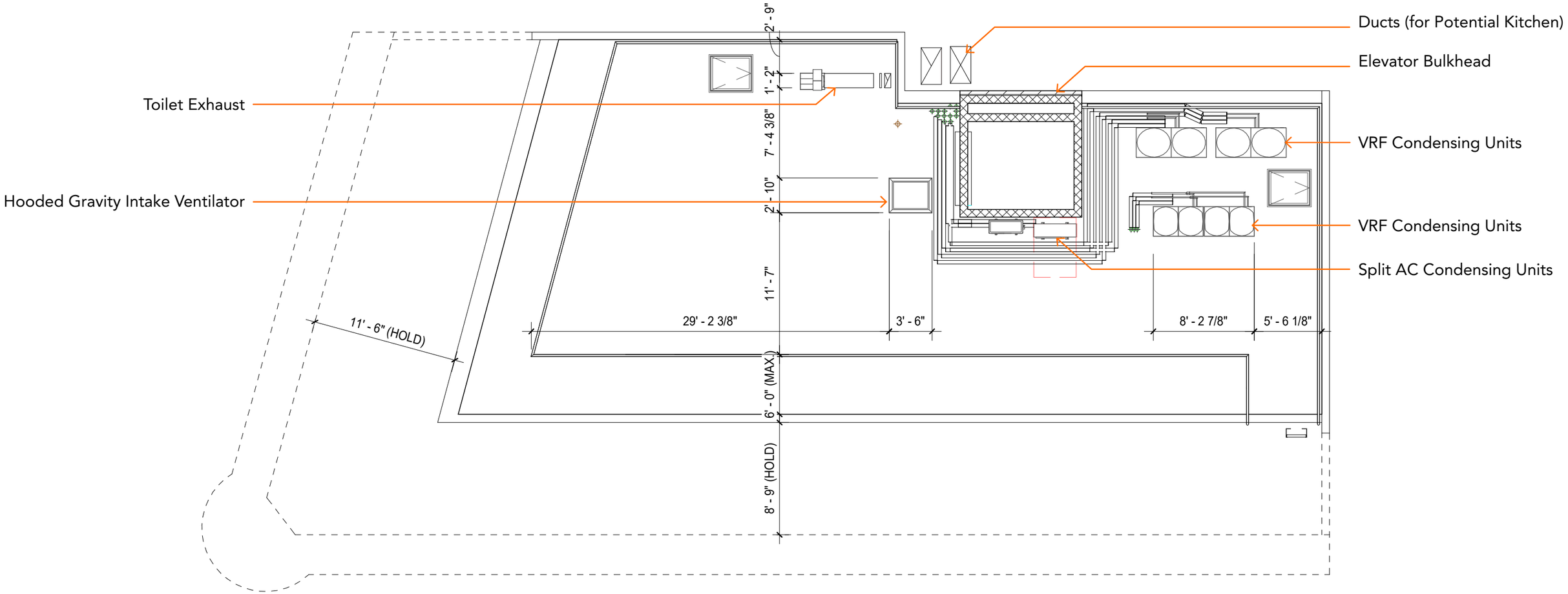

Mechanical Roof Equipment Plan
(1/8″ = 1′-0″)

MANCINI:

Rooftop Addition

Visibility Study - Locations

396 West Street
View with 3D + Physical Mockup
View with Physical Mockup

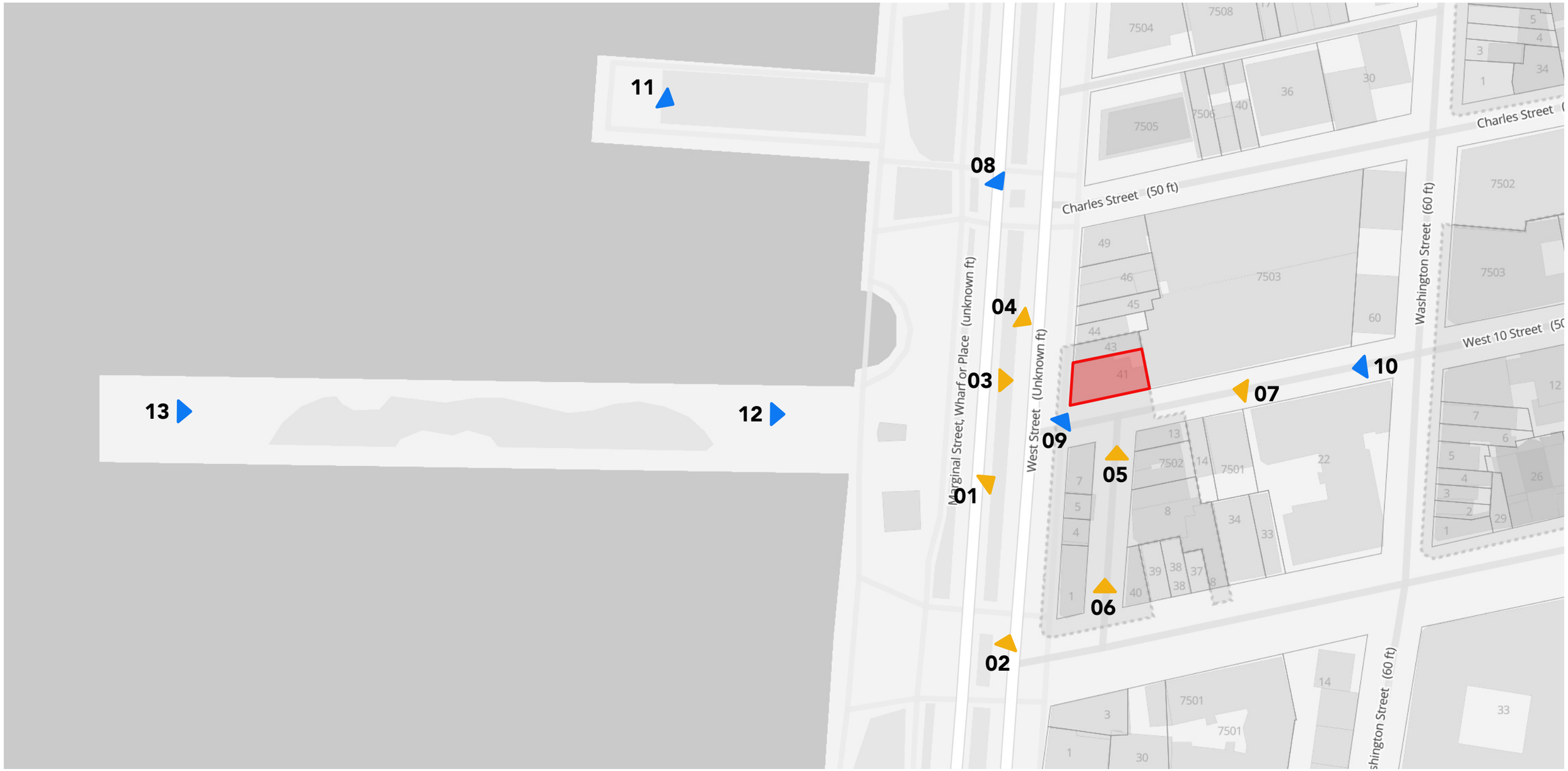

MANCINI:

Rooftop Addition

Visibility Study - View 01

396 West Street
View with 3D + Physical Mockup
View with Physical Mockup

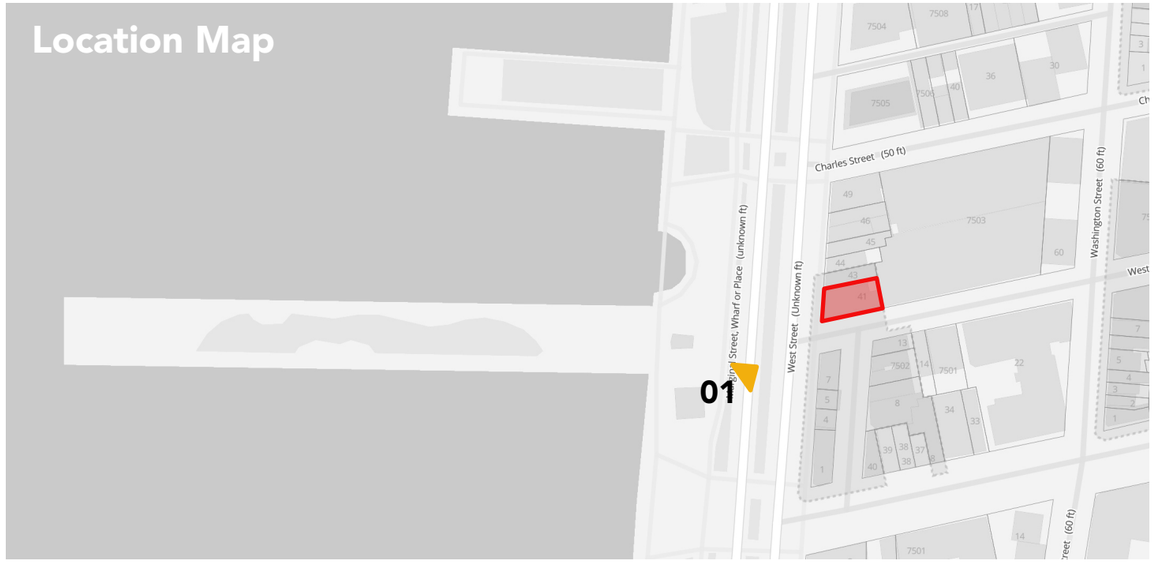

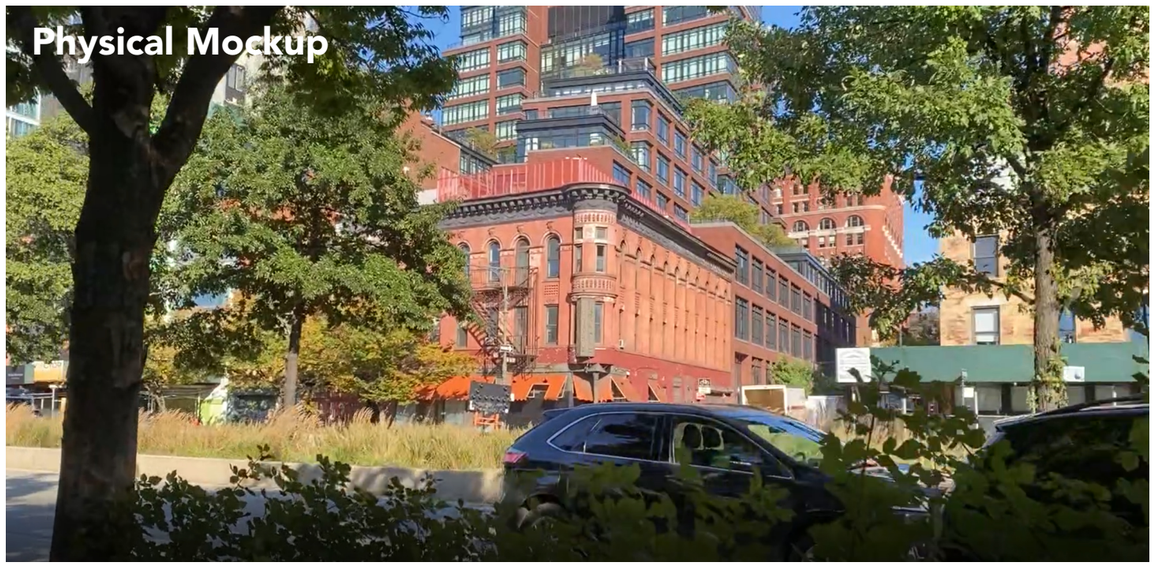

MANCINI

Rooftop Addition

Visibility Study - View 02

396 West Street
View with 3D + Physical Mockup
View with Physical Mockup

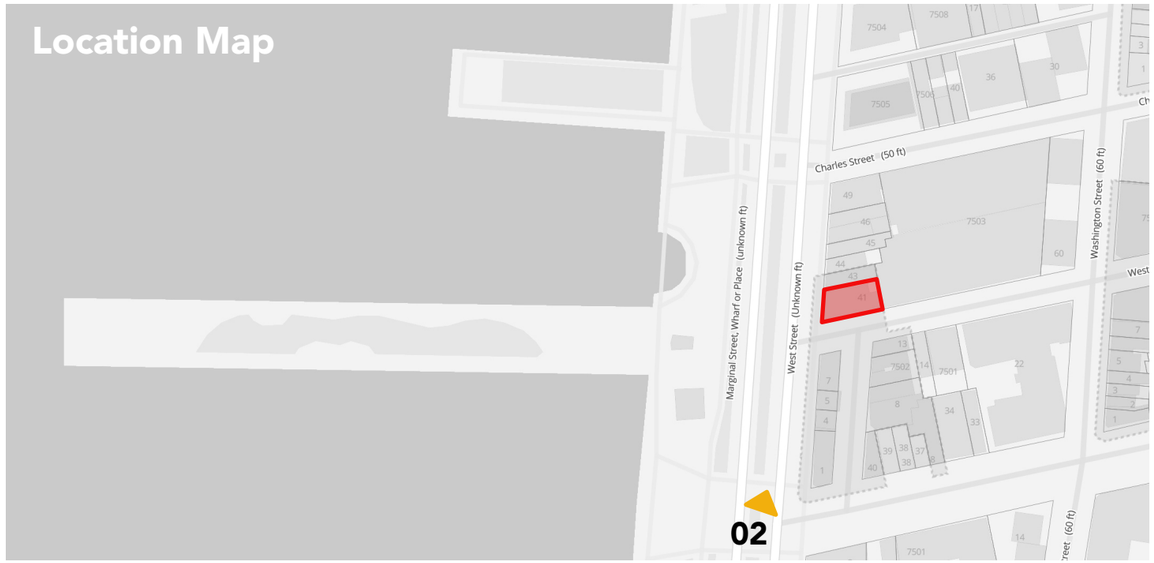

MANCINI

Rooftop Addition

Visibility Study - View 03

396 West Street
View with 3D + Physical Mockup
View with Physical Mockup

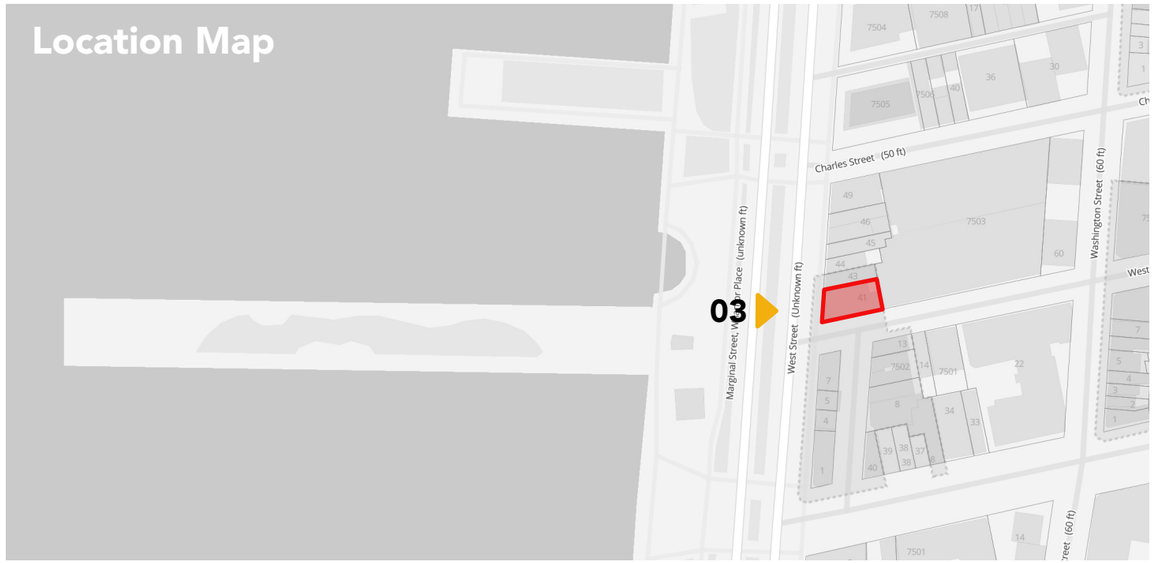

MANCINI

Rooftop Addition

Visibility Study - View 04

396 West Street
View with 3D + Physical Mockup
View with Physical Mockup

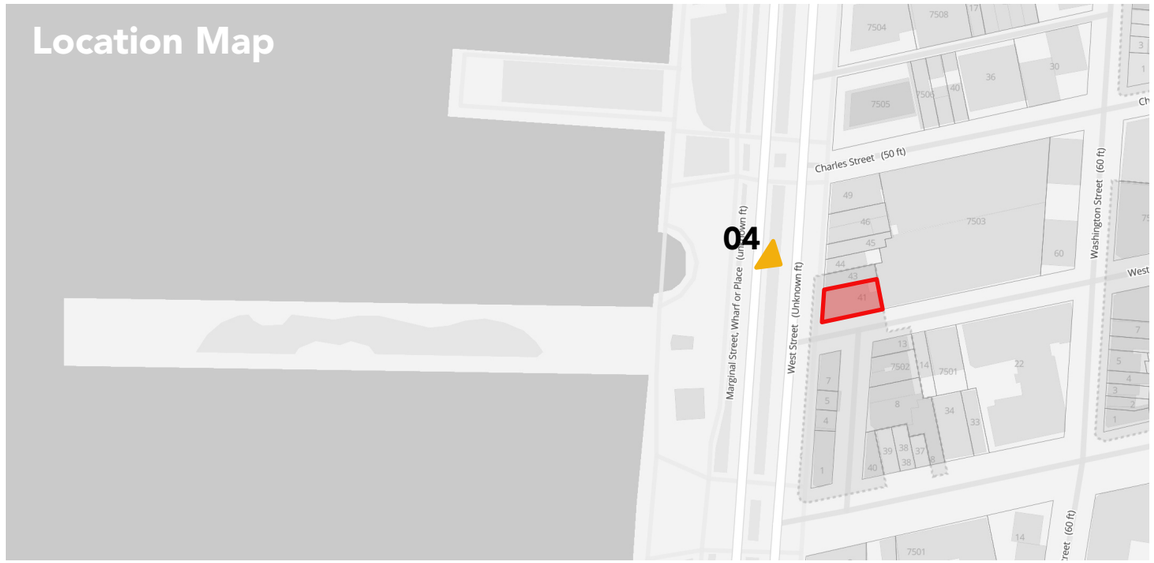

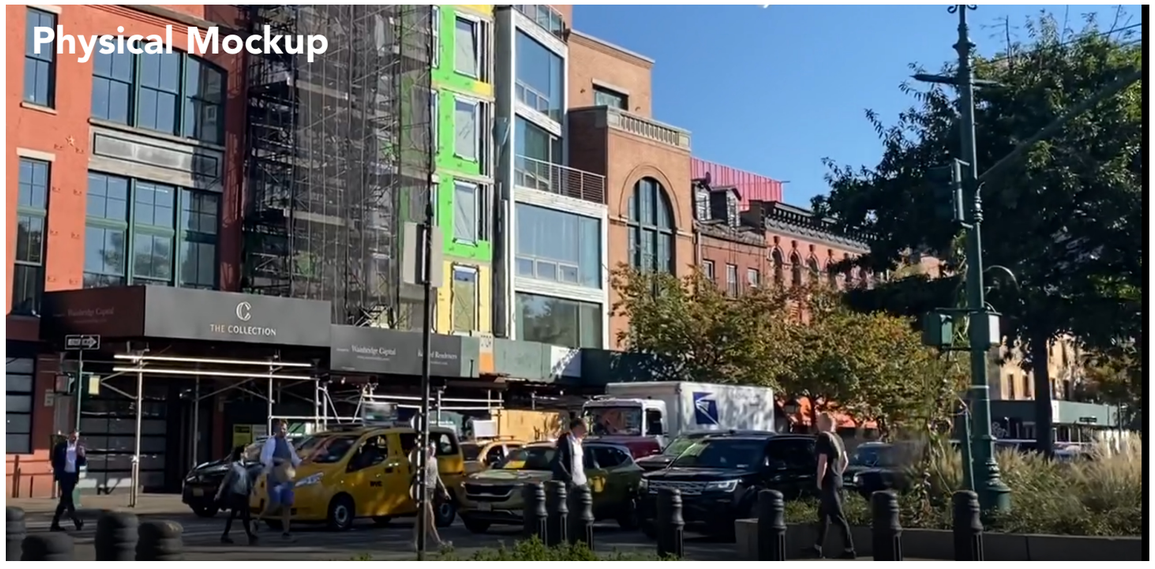

MANCINI

Rooftop Addition

Visibility Study - View 05

396 West Street
View with 3D + Physical Mockup
View with Physical Mockup

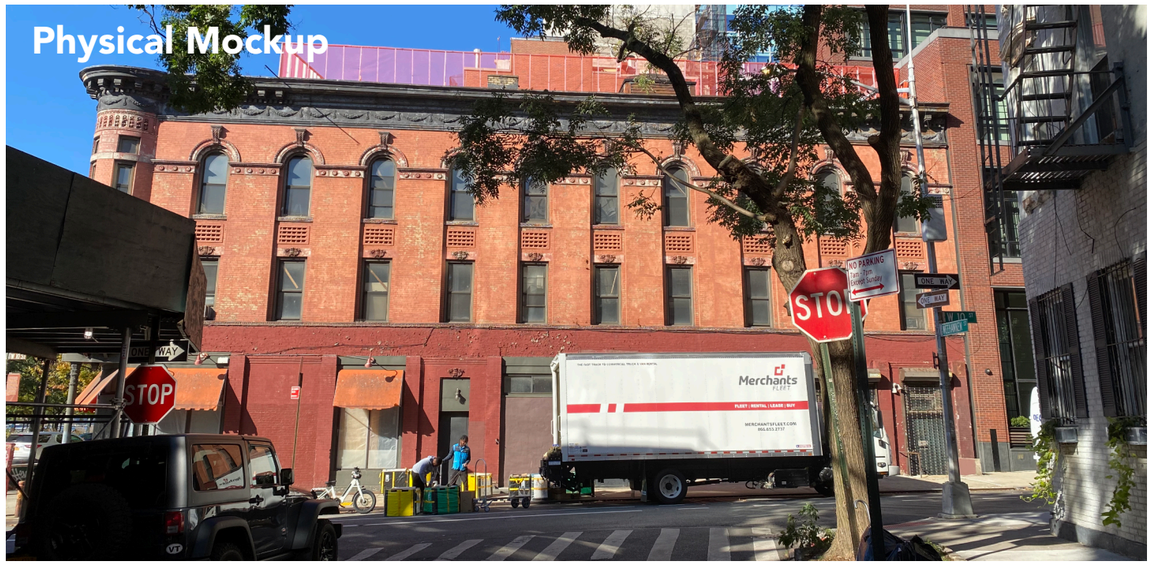

MANCINI

Rooftop Addition

Visibility Study - View 06

396 West Street
View with 3D + Physical Mockup
View with Physical Mockup

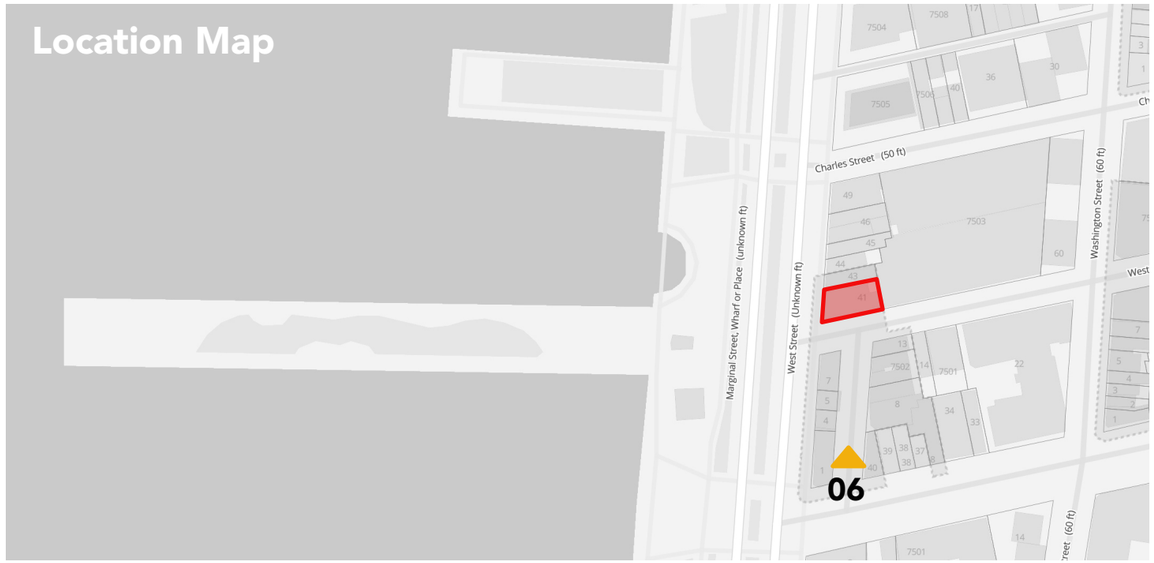

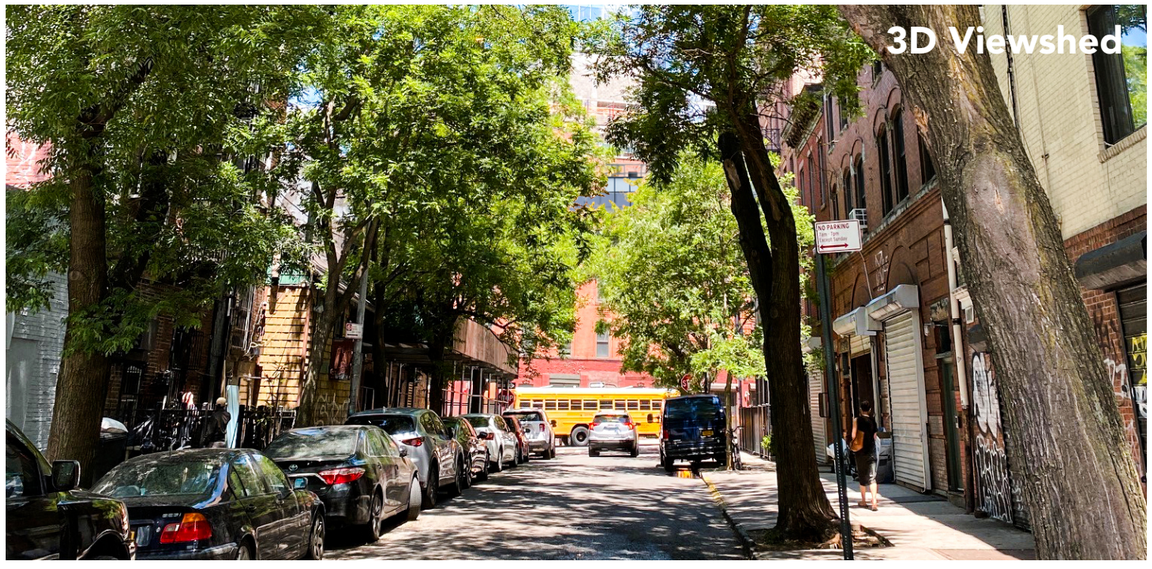

MANCINI

Rooftop Addition

Visibility Study - View 07

396 West Street
View with 3D + Physical Mockup
View with Physical Mockup

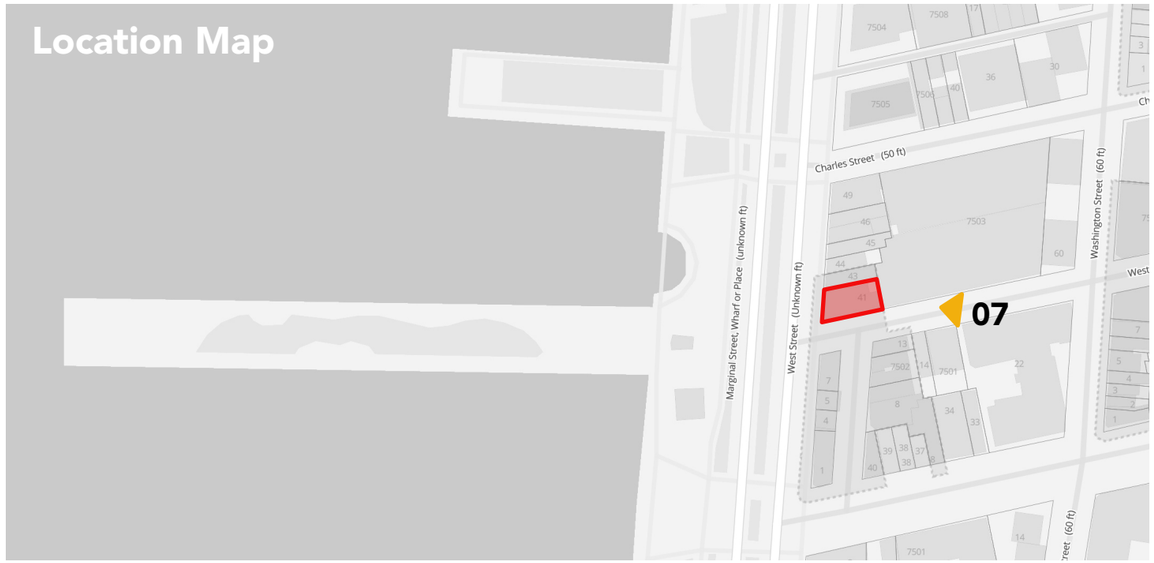

MANCINI

Rooftop Addition

Visibility Study - View 08 & 09 & 10

396 West Street
View with 3D + Physical Mockup
View with Physical Mockup

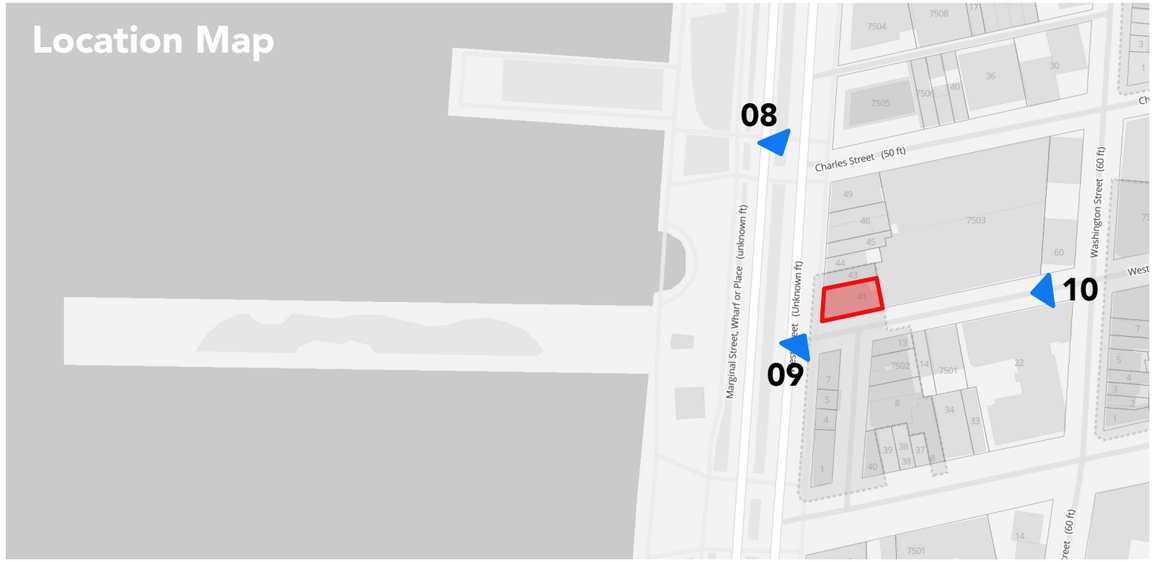

MANCINI

Rooftop Addition

Visibility Study - View 11 & 12 & 13

396 West Street
View with 3D + Physical Mockup
View with Physical Mockup

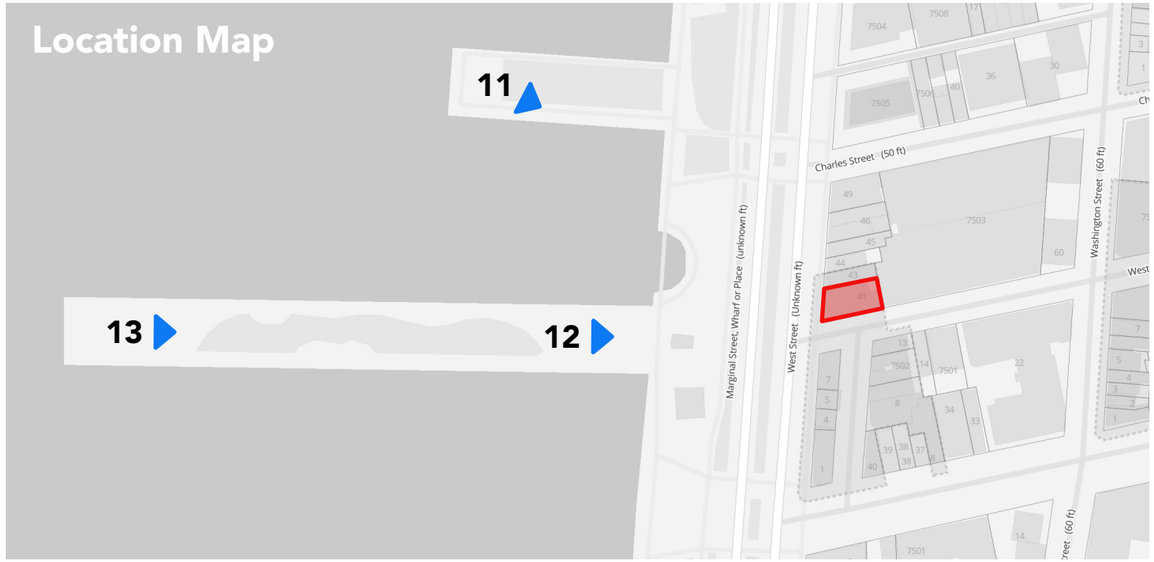

MANCINI

Rooftop Addition

Visibility Study - Mockup Axon Diagram

Presented Design Alterations After Mock-Up

Construction Mesh (or approved similar)

* Verify the height from the reference point plane to the existing slopped roof

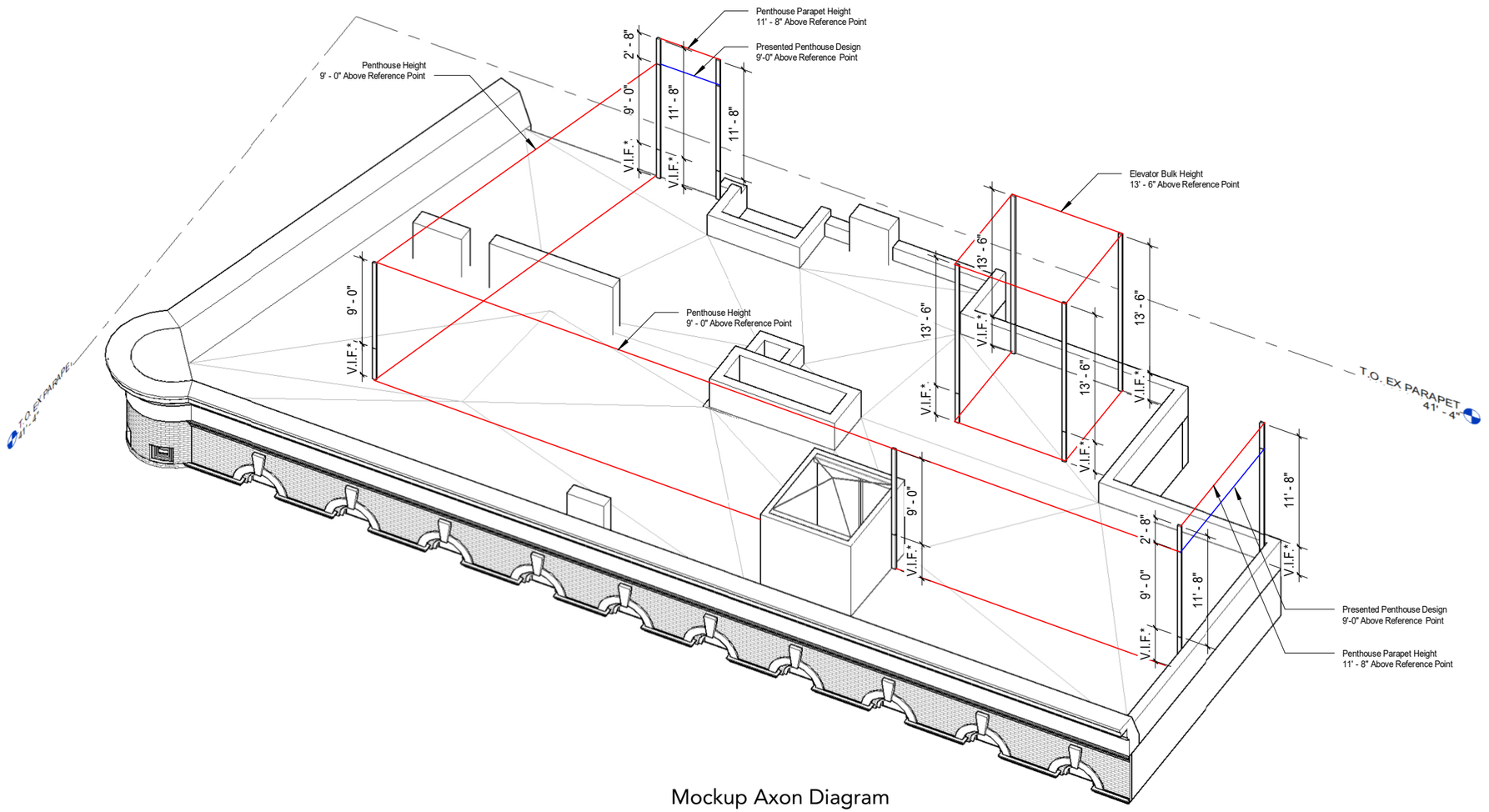

Mockup Axon Diagram
(NTS)

MANCINI

Rooftop Addition

Proposed Design - Autumn

MANCINI:

Rooftop Addition

Proposed Design - Autumn

MANCINI:

Rooftop Addition

Proposed Design - Autumn

MANCINI

Rooftop Addition

Proposed Design - Autumn

MANCINI

Floor Plans, Signage, and Security Camera

Floor Plans

Proposed Interior Plans - Ground & 2nd Floor

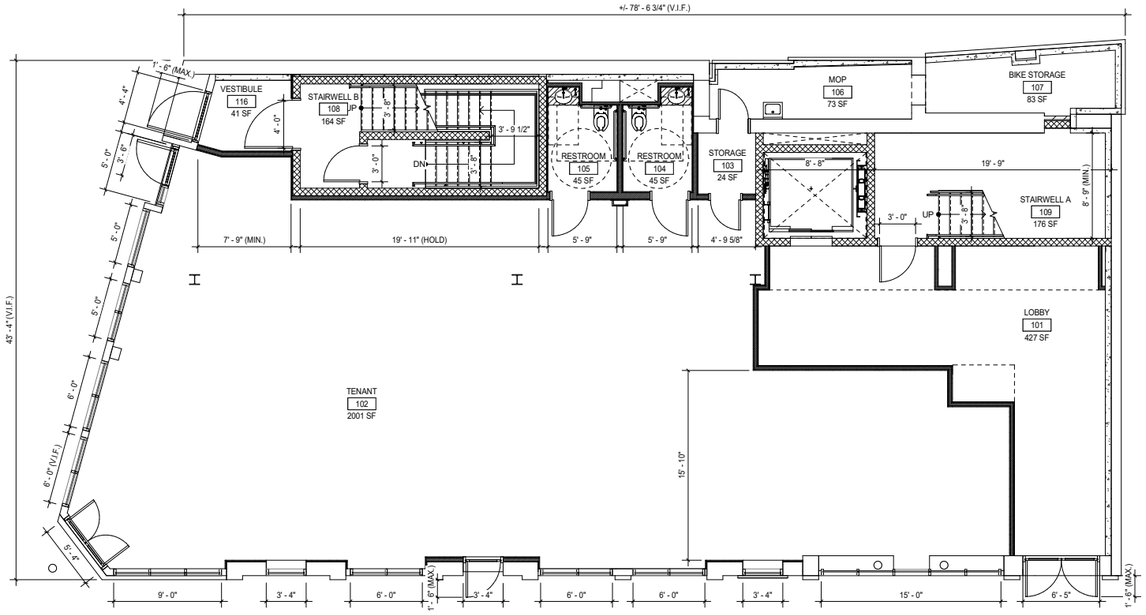

Ground Floor Plan
(NTS)

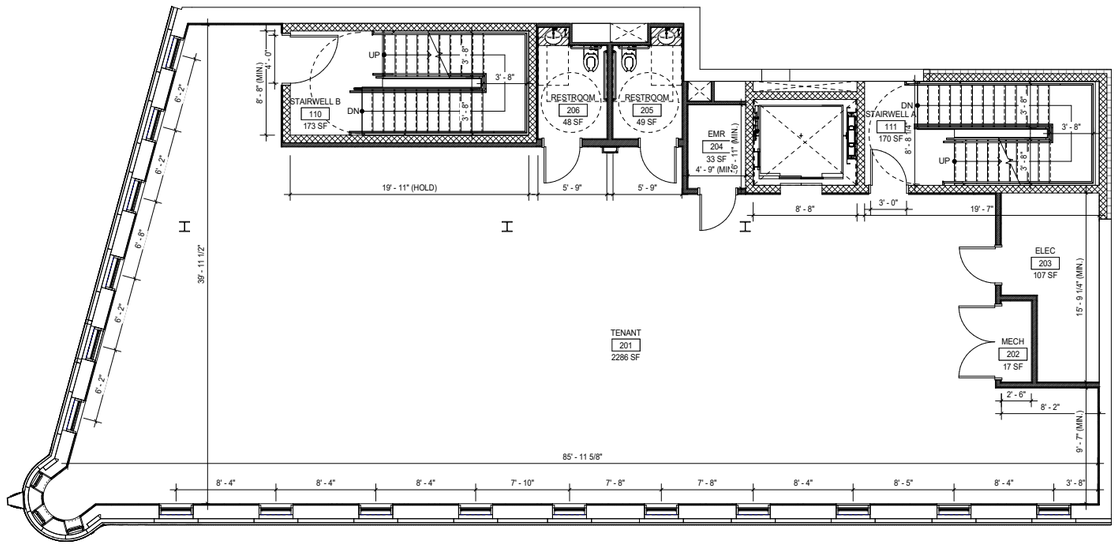

2nd Floor Plan
(NTS)

MANCINI

Floor Plans

Proposed Interior Plans - 3rd Floor & Penthouse

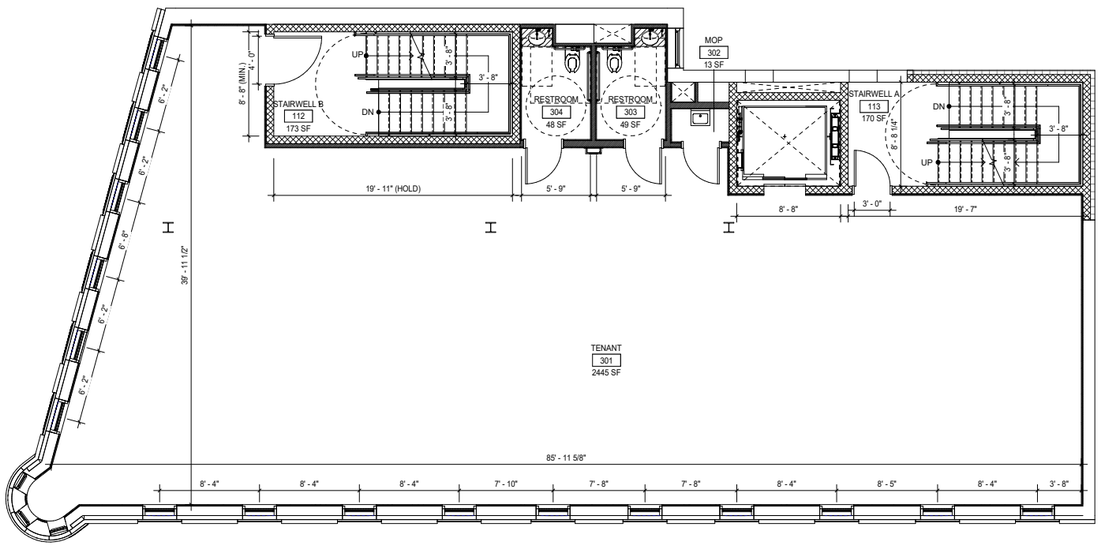

3rd Floor Plan
(NTS)

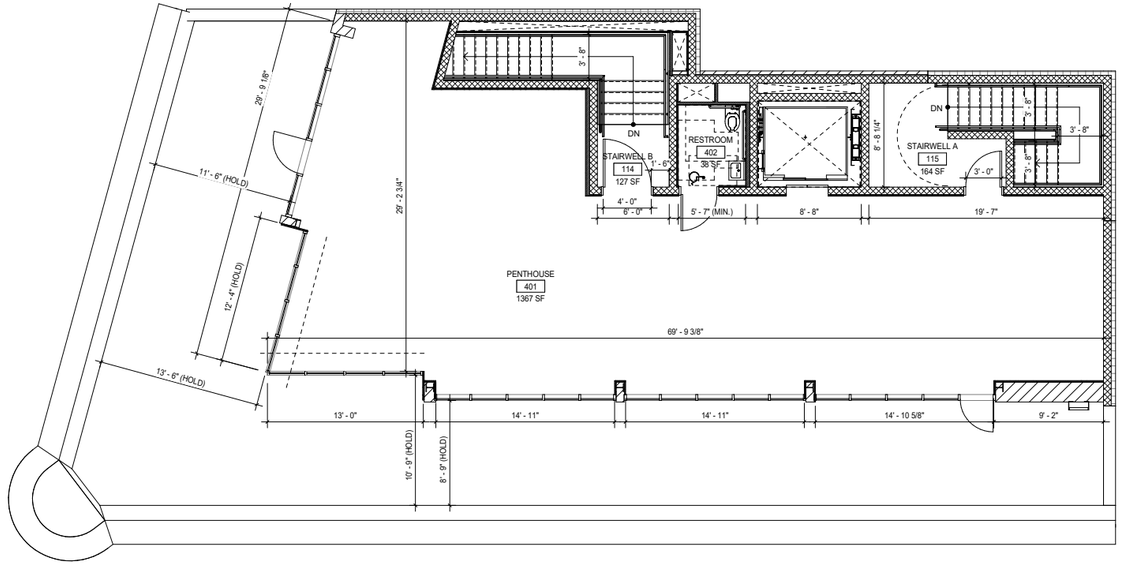

Penthouse Floor Plan
(NTS)

Signage
Historic Exterior Signage

Historic (1927/1932/1941/1980)

Historic Signage: 1927
(Photo)

Historic Signage: 1932
(Photo)

Historic Signage: 1941
(Photo)

Historic Signage: 1980
(Photo)

MANCINI:

Signage

Proposed Exterior Signage - Main & Blade

White Painted Plastic

Color-Matched Atlantic Gray

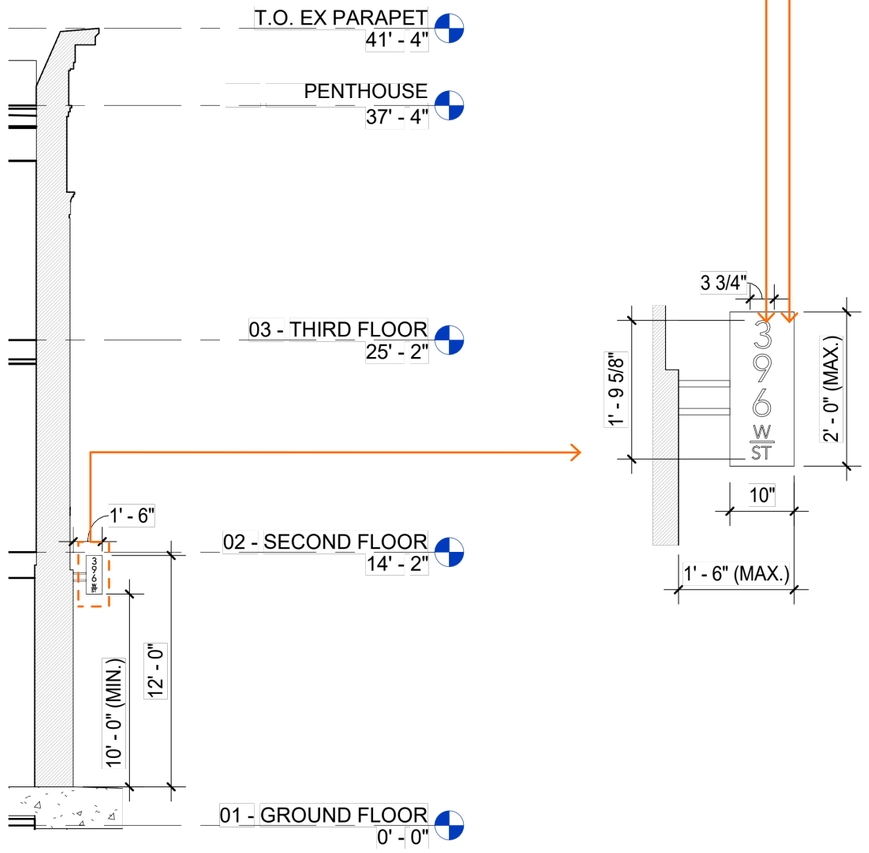

Main Signage

(1/2” = 1’-0” | 1/8” = 1’-0”)

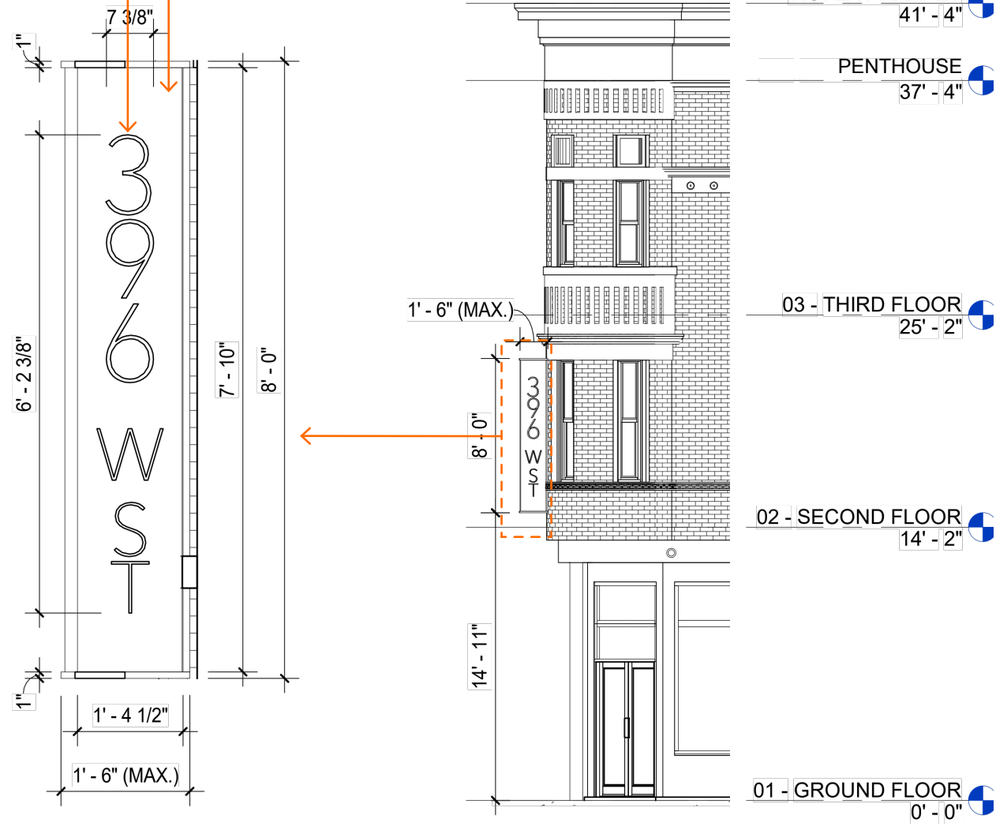

Blade Signage

(1/2” = 1’-0” | 1/8” = 1’-0”)

MANCINI

Signage & Camera

Proposed Mounting Details

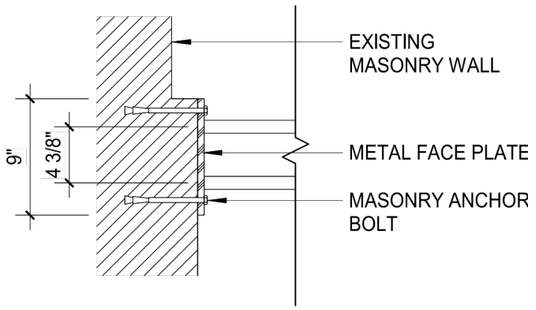

Bracket Signage Mounting Detail
(1” = 1’-0”)

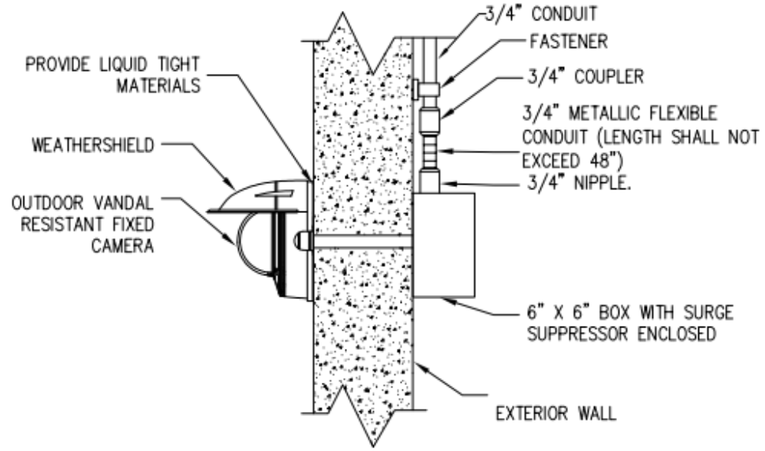

Security Camera Mounting Detail
(NTS)

MANCINI

Appendix

Appendix
Building Historic Reference

396-397 WEST STREET (aka 305 WEST 10TH STREET) HOLLAND HOTEL
Tax Map Block 636, Lot 41 [formerly lots 41, 42]

Date: 1903-04 (NB 162-1903)
Architect: Charles Stegmayer
Original Owner: Albert A. and Rosa Goebel Adler

Type: Hotel
Style: neo-Renaissance
Stories: 3
Facade Materials: buff brick (painted), terra cotta, pressed metal cornice

Ownership History
1903 Albert A. and Rosa Goebel Adler
1911 Crescent-Star Realty Co. (foreclosure)
1926 Denwood Realty Co.
1930 Benenson Realty Co.
1934 Crescent-Star Realty Co. (foreclosure)
1949 Rofel Realty Corp.
1950 Arthur E. Buchwald
1953 Melvin Kaplan, Ernest Ohmer
1955 Carine Realty Corp.
1960 396 West Street Corp. (foreclosure)
1978 Scott Lau Hotel Corp.
1985 William Gottlieb

Commercial Tenants
Holland Hotel (1904 on); Albert A. Adler, liquors/ saloon (1904-07); Clyde Hotel (1920-21); Juan Gonzalez, men's furnishings (1929-45); Otto Charles, barber (1929-45); New Holland Hotel (1935-93); Sunset Motor Lines (1935); International Coffee Shop (1939); B&S Trucking Co. (1940); Remark Building Service Co., renovations, repairs and cleaning (1942-80); LTA Food Shop/ J&B Food Shop (1945-65); Louis Oguinick, uniforms (1950-70); Hi-Way Bar Grill (1974); Peter Rabbit, gay bar and grill (1972-88); Sung Hai, restaurant (1993); Uguale, restaurant (2004); Antica Venezia Ristorante (2005)

History
In January 1903, this property, as well as a mortgage, were obtained by Albert A. Adler from Catherine A.Q. Trowbridge. Adler, an immigrant from Saxony, was a restaurateur who had married Rosa Goebel in 1881. Architect Charles Stegmayer filed in March for construction of a 3-story neo-Renaissance style hotel, expected to cost $20,000. The Holland Hotel was completed in February 1904. Adler was listed in directories operating a liquors/ saloon business here. In 1910, however, the property was foreclosed and advertised for sale in September. It was taken over by the Crescent-Star Realty Co., an entity associated with the Jacob Hoffman Brewing Co., which had extended mortgages on the property (Philip Hoffman was vice president of both Hoffman Brewing and Crescent-Star). Sometime before 1920, it became known as the Clyde Hotel. The hotel was acquired by the Denwood Realty Co. in 1926, which leased it the following year for 21 years to Charles E. Bacon and associates. At that time, it was announced that "extensive alterations" were to be made. A men's furnishings business and barbershop were located here until at least 1945. The Benenson Realty Co. was the owner from 1930 until foreclosure in 1934, when it reverted to the Crescent-Star Realty Co., under William J. Hoffman, and became the New Holland Hotel. Several long-term tenants were the Remark Building Service Co., "building renovations, masonry repairs, steam cleaning, water-proofing, painting" (c. 1942-80); LTA Food Shop/ J&B Food Shop (c. 1945-65); and Louis Oguinick's uniforms store (c. 1950-70). The New Holland Hotel, with 36 rooms plus stores, was purchased as a personal investment in 1950 by Arthur E. Buchwald (vice president of Sterling Investment Corp.). The property passed to Melvin Kaplan and Ernest Ohmer in 1953; Carine Realty Corp. in 1955; 396 West Street Corp. through foreclosure in 1960; Scott Lau Hotel Corp. in 1978; and in 1985 to William Gottlieb, a major investor in properties in the West Village. By 1972, Peter Rabbit, a gay bar and grill, was a commercial tenant, which remained until at least 1988.

Built during the third significant phase of the historic district's development, when it continued to be improved with residential, industrial, and commercial structures after the turn of the 20th century, this handsome 3-story, neo-Renaissance hotel, one of the last surviving hotels located along the Hudson River waterfront, contributes to the historically-mixed architectural character and varied uses – much of it maritime-related – of the Weehawken Street Historic District.

Architectural Features
The Holland Hotel is substantially unaltered on its upper two stories, aside from its buff brick and terra cotta being covered by a coat of red paint. The design, with 6 bays along West Street and 10 bays along West 10th Street, features a round corner oriel, monumental pilasters with bossed capitals, patterned spandrel panels, second-story rectangular windows with lintels ornamented with cartouches, third-story round arches with keystones, and a projecting metal cornice ornamented with swags, dentils, and modillions. The ground story has been altered several times, but the corner cast-iron column that supports the oriel survives. The fire escape on the West Street facade was installed in the 1920s.

Alterations
modillions and dentils removed from the central portion of the cornice on West 10th Street (c. 1939-61); West Street storefront (1988); West 10th Street ground-story openings and rolldown gates (post-1988); ground-story lighting fixtures (post-1988)

References
Kellerman; NY County, Office of the Register; NYC, Buildings Dept.; NYC Directories (1904-07); *Manhattan Address Directories* (1929-93); "Albert A. Adler," www.familysearch.org website and U.S. Census (1880); "Real Estate Transfers," *NYT*, Jan. 6, 1903, 14; "The Building Department," *NYT*, Mar. 14, 1903, 14; "Projected Buildings, *Real Estate Record & Builders Guide*, Mar. 14, 1903, 520; "Special Sales Day," *NYT*, Sept. 4, 1910, 12; Philip Hoffman obit., *NYT*, Mar. 22, 1915, 9; "'Manhattan's Oldest Houses' Turn Out to Be Fairly New," *New York Evening Post*, June 15, 1920, 6; "West Street Hotel Leased With Option," *NYT*, Oct. 11, 1927, 50; Remark Building Service Co. advertisement, *NYT*, Jan. 2, 1942, 66; "New Holland Hotel Sold on West Street," *NYT*, Aug. 4, 1949, 37; [Sterling Investing Corp.], *NYT*, May 1, 1950, 35; "Real Estate Notes," *NYT*, May 6, 1950, 23; John Francis Hunter, *The Gay Insider U.S.A.* (N.Y.: Stonehill Publg., 1972), 517; Spartacus, *The American Bicentennial Gay Guide* (1976), 259.

Photographs: Museum of the City of New York (1920); NYC, Dept. of Taxes (c. 1939); David McLane, *New York Sunday News*, Aug. 21, 1955; LPC, John Barrington Bayley (1964); LPC (c. 1983, 2005); Greenwich Village Society for Historic Preservation (1986, 1988, 1989, 2004).

Appendix

Historic/Existing/Proposed - W1

Historic (1927/1932/1941/1980)

Historic Hung Window: W1-Historic
(Photo)

Existing (2021)

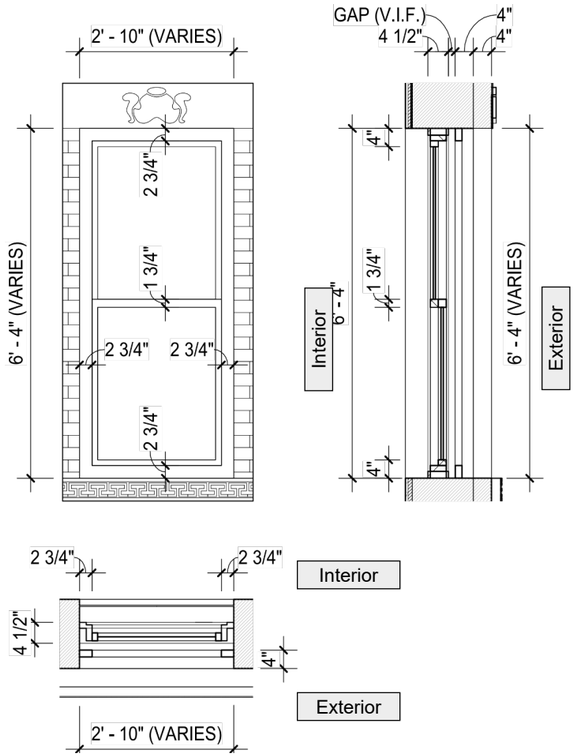

Existing Hung Window: W1-Existing
(3/8″ = 1′-0″)

Proposed

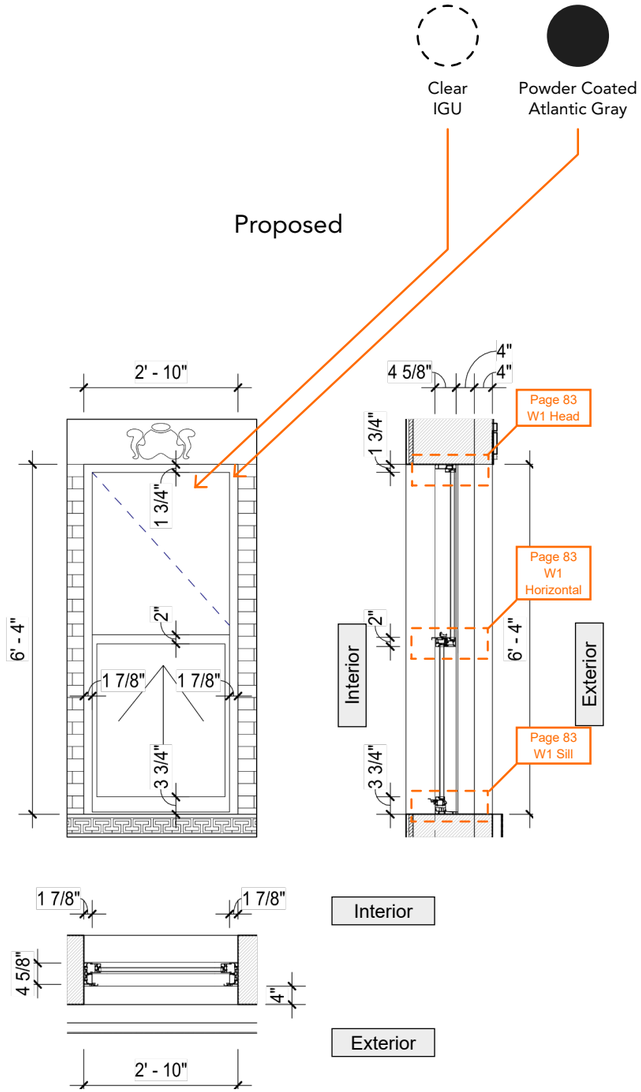

Proposed Hung Window: W1
(3/8″ = 1′-0″)

MANCINI

Appendix

Historic/Existing/Proposed - W2

Historic (1927/1932/1941/1980)

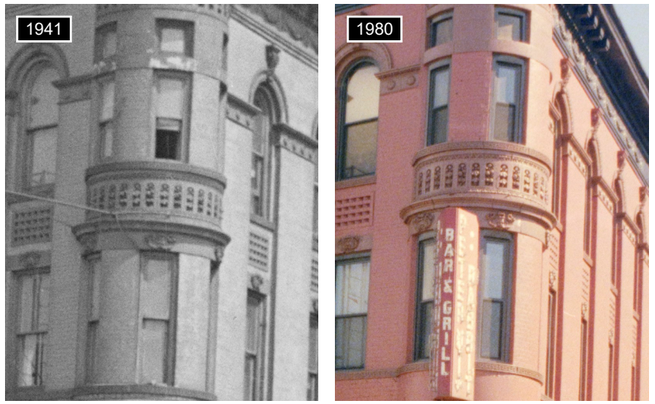

Historic Hung Window: W2-Historic
(Photo)

Existing (2021)

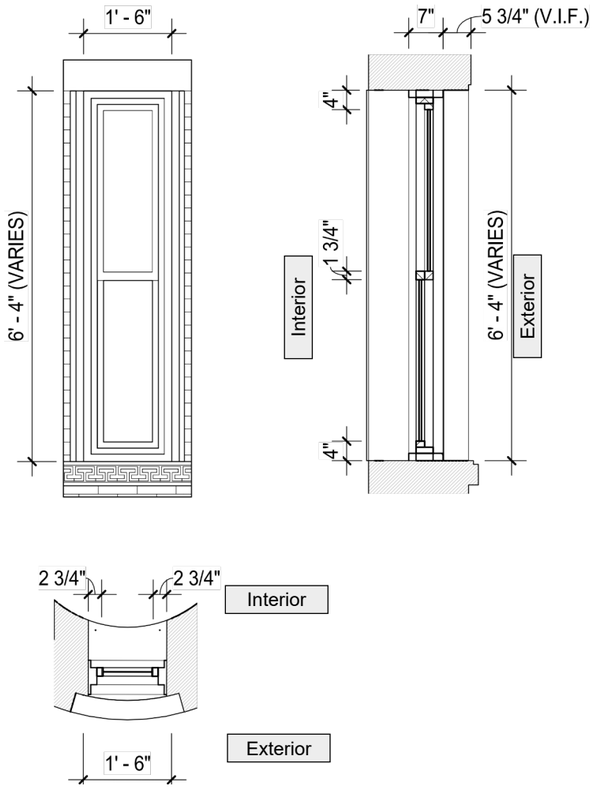

Existing Hung Window: W2-Existing
(3/8″ = 1′-0″)

Proposed

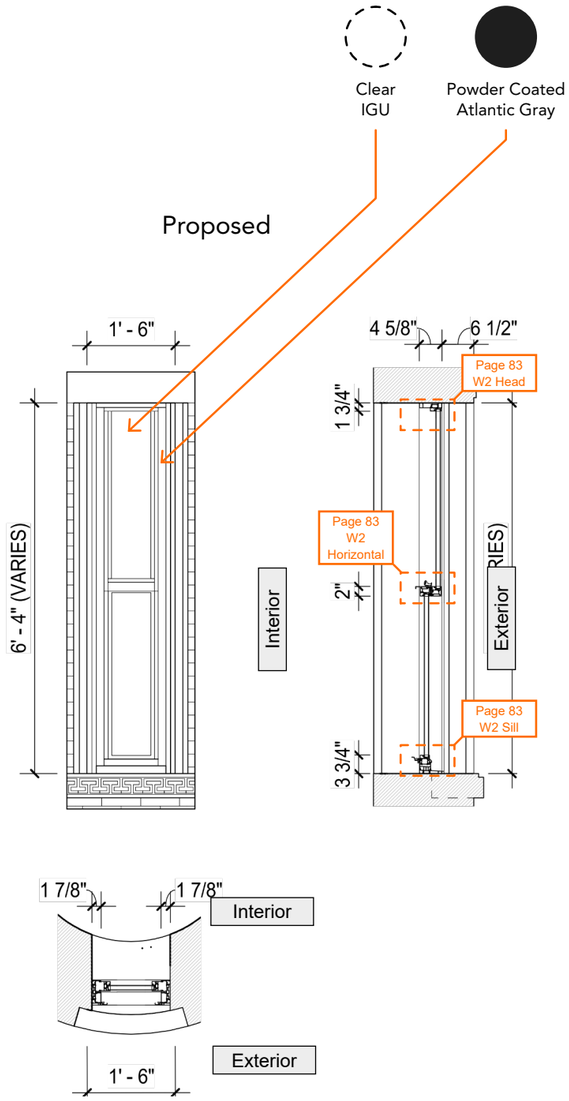

Proposed Hung Window: W2
(3/8″ = 1′-0″)

MANCINI

Appendix

Historic/Existing/Proposed - W3

Historic (1927/1932/1941/1980)

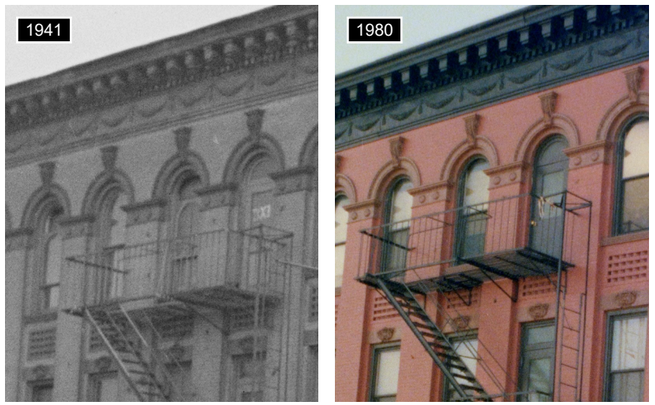

Historic Hung Window: W3-Historic
(Photo)

Existing (2021)

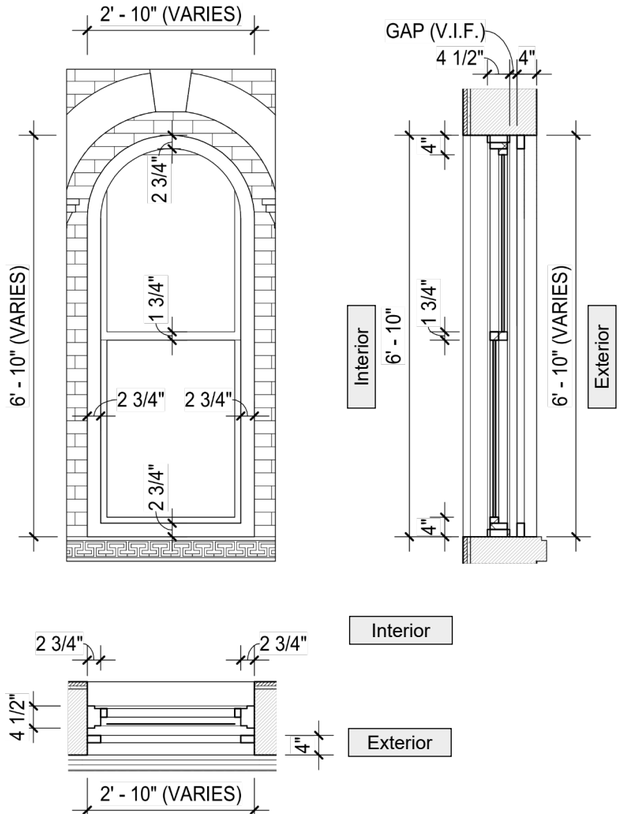

Existing Hung Window: W3-Existing
(3/8″ = 1′-0″)

Proposed

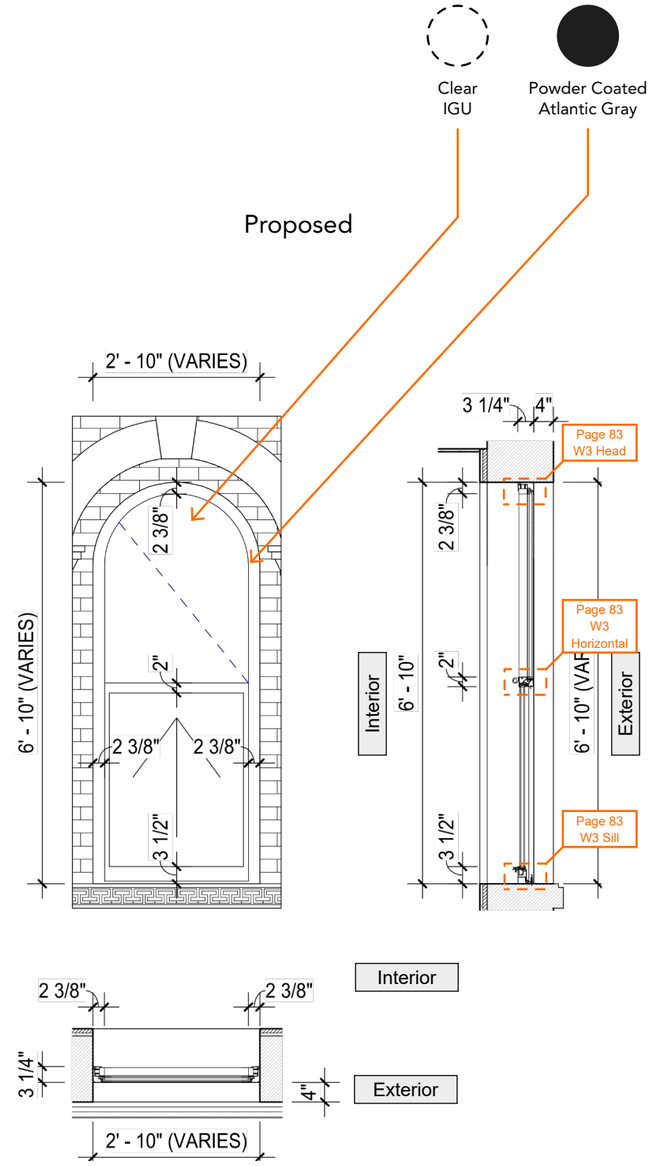

Proposed Hung Window: W3
(3/8″ = 1′-0″)

MANCINI:

Appendix

Historic/Existing/Proposed - W4

Historic (1927/1941/1980)

1932

W4-Historic Is not Visible in the Historical Photo

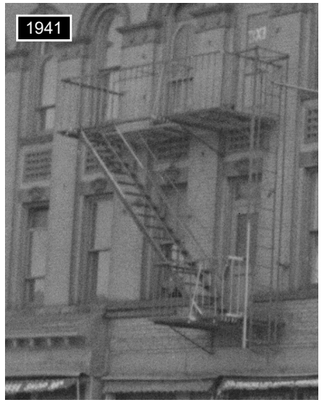

Historic Fire Exit Door
(Photo)

Existing (2021)

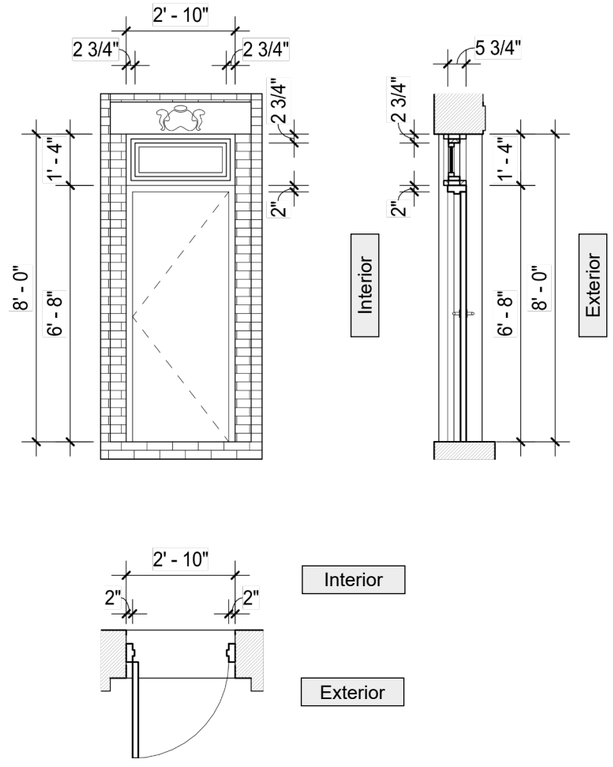

Existing Fire Exit Door
(1/4" = 1'-0")

Proposed

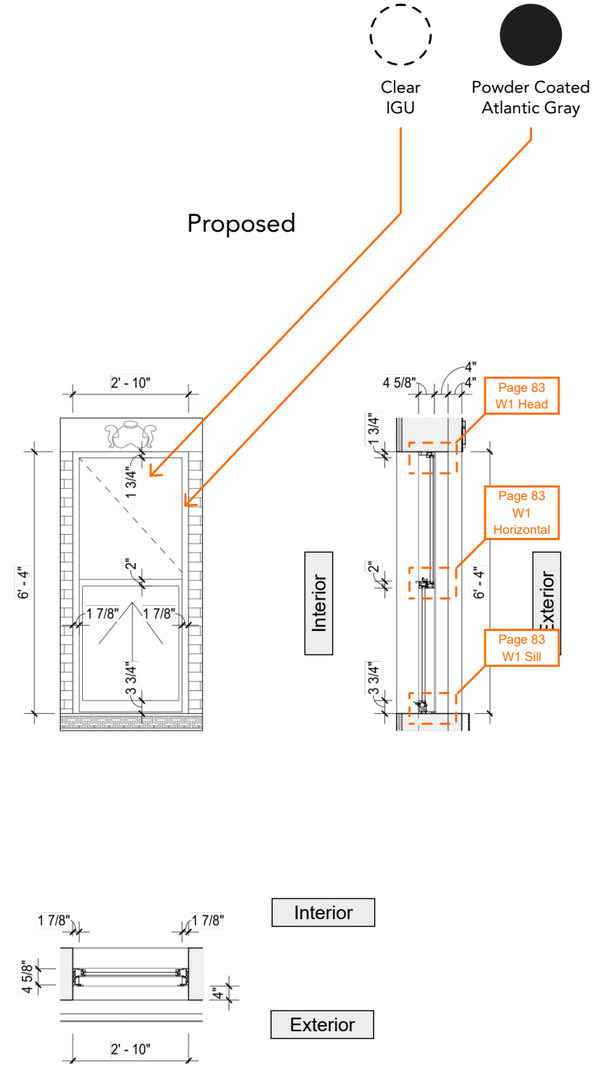

Proposed Hung Window W4
(1/4" = 1'-0")

MANCINI

Appendix

Historic/Existing/Proposed - W5

Historic (1927/1941/1980)

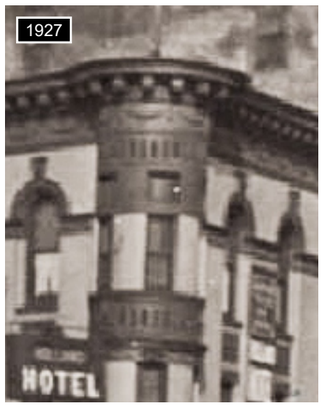

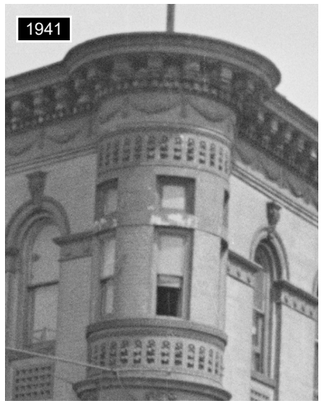

Historic Fixed Window: W5-Historic
(Photo)

Existing (2021)

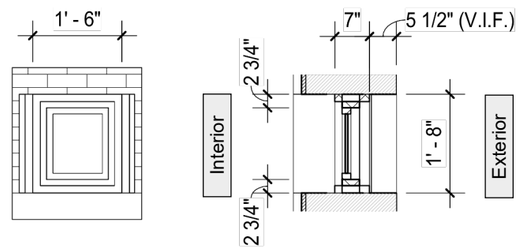

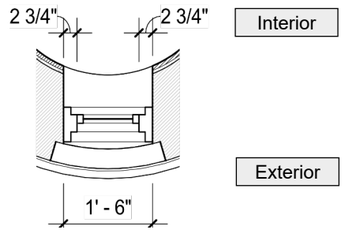

Existing Fixed Window: W5-Existing
(3/8″ = 1′-0″)

Proposed

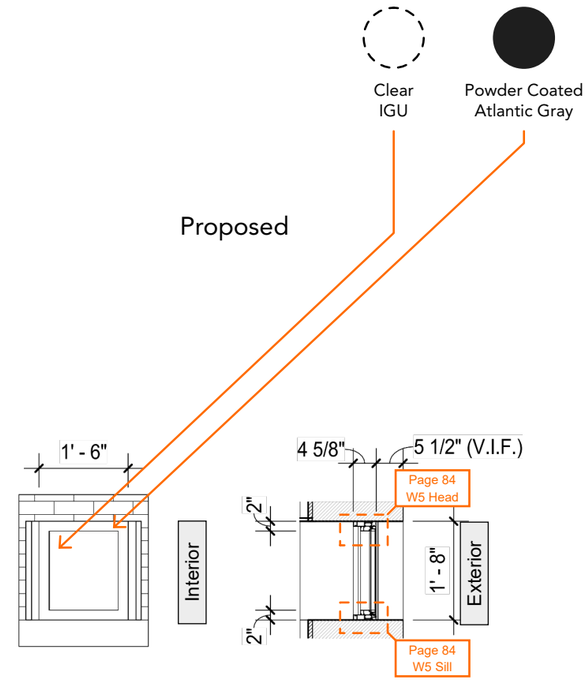

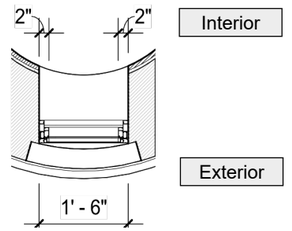

Proposed Fixed Window: W5
(3/8″ = 1′-0″)

MANCINI

Appendix

Enlarged Details - Storefront ST1 & ST2

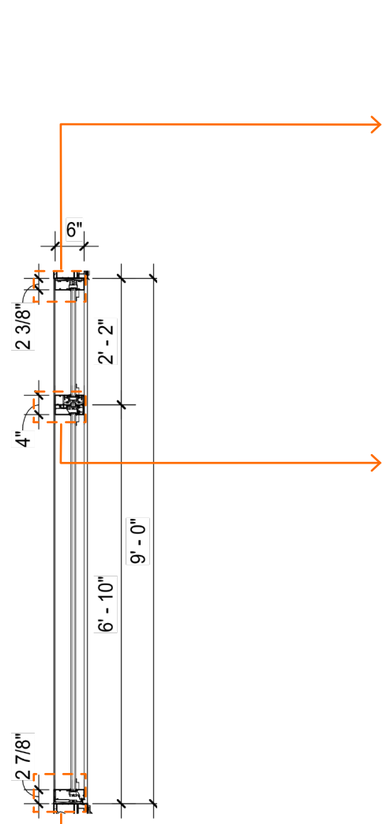

ST1 Section
(3/8" = 1'-0")

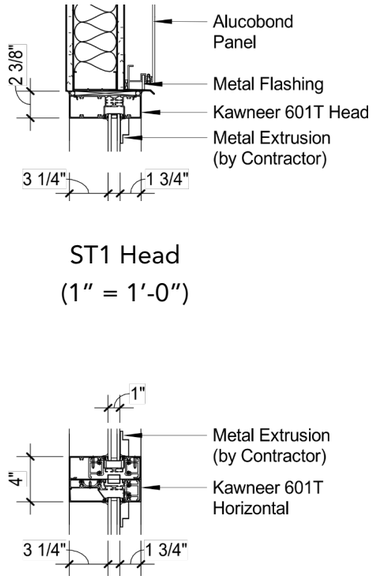

ST1 Head
(1" = 1'-0")

ST1 Horizontal
(1" = 1'-0")

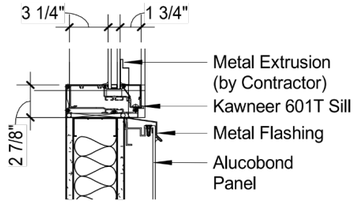

ST1 Sill
(1" = 1'-0")

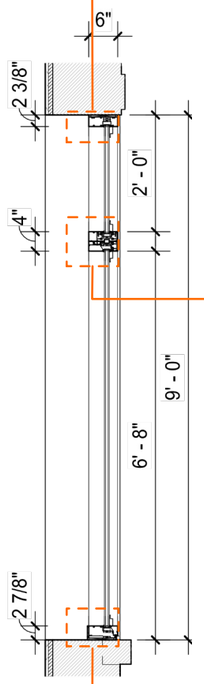

ST2 Section
(3/8" = 1'-0")

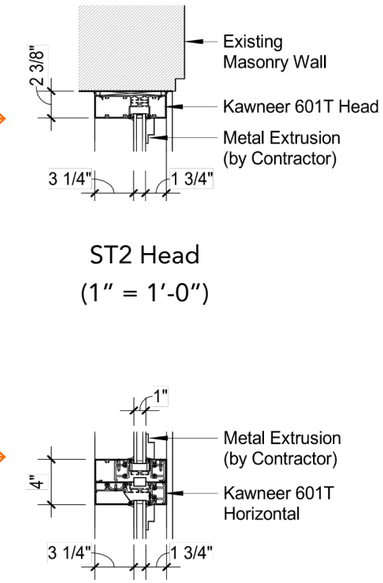

ST2 Head
(1" = 1'-0")

ST2 Horizontal
(1" = 1'-0")

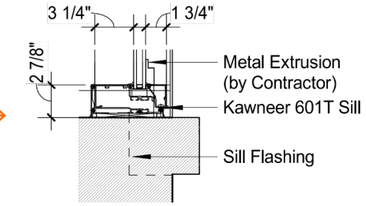

ST2 Sill
(1" = 1'-0")

MANCINI:

Appendix

Enlarged Details - Window W1, W2 & W3

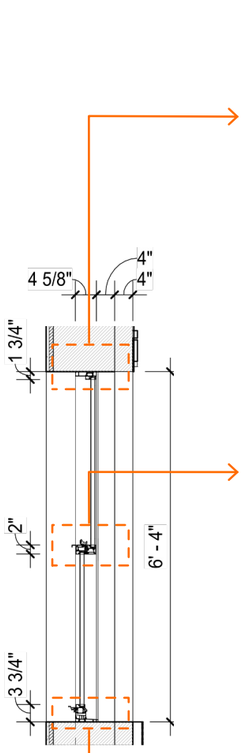

W1 Section
(3/8" = 1'-0")

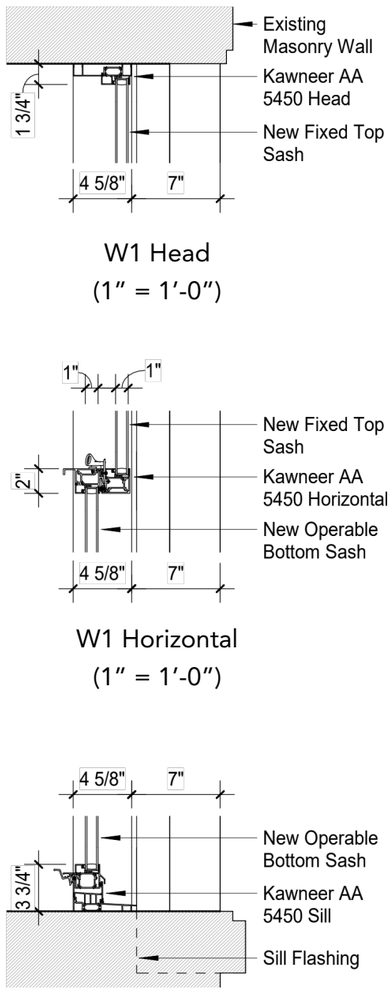

W1 Head
(1" = 1'-0")

W1 Horizontal
(1" = 1'-0")

W1 Sill
(1" = 1'-0")

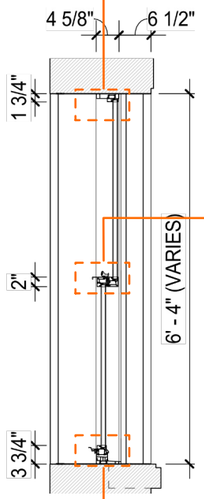

W2 Section
(3/8" = 1'-0")

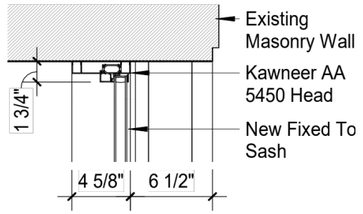

W2 Head
(1" = 1'-0")

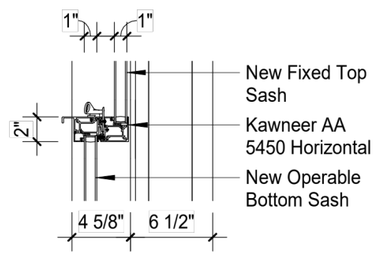

W2 Horizontal
(1" = 1'-0")

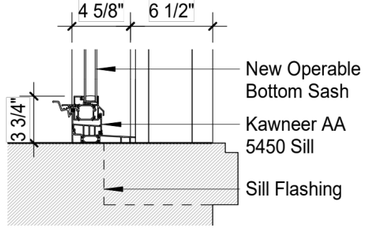

W2 Sill
(1" = 1'-0")

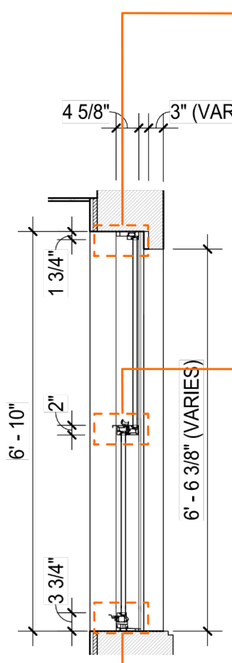

W3 Section
(3/8" = 1'-0")

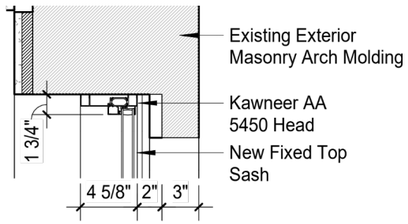

W3 Head
(1" = 1'-0")

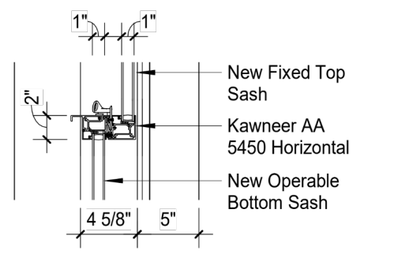

W3 Horizontal
(1" = 1'-0")

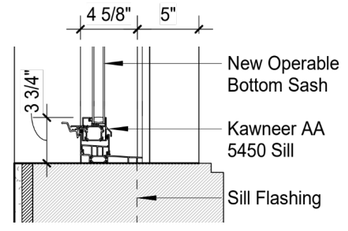

W3 Sill
(1" = 1'-0")

MANCINI

Appendix

Enlarged Details - Window W5

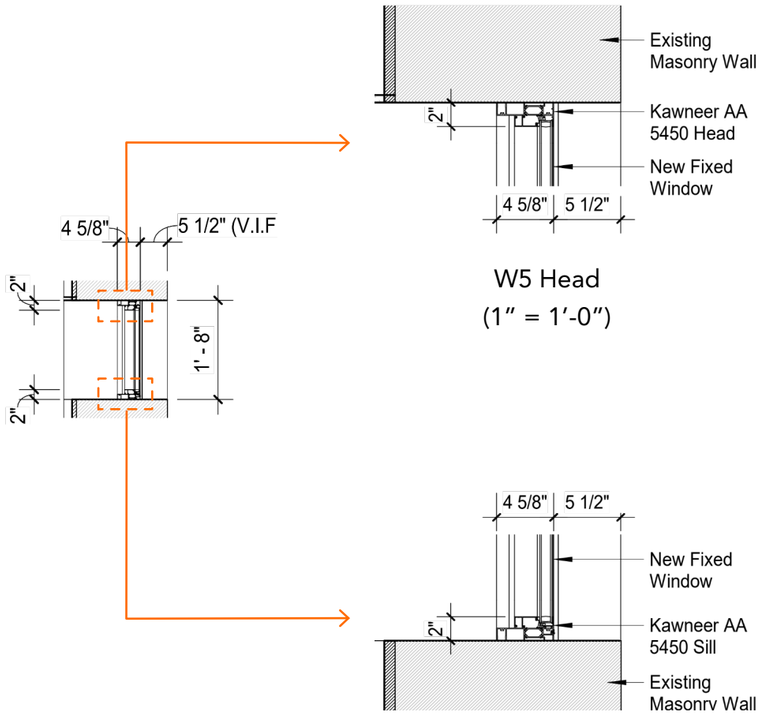

W5 Section
(3/8" = 1'-0")

W5 Head
(1" = 1'-0")

W5 Sill
(1" = 1'-0")

Appendix

Enlarged Details - Entrance EN1, EN2 & EN3

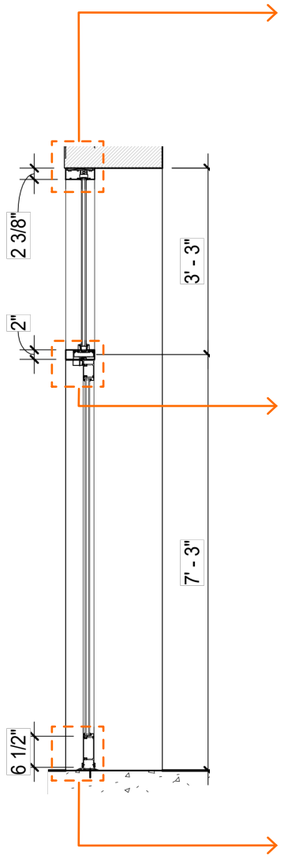

EN1 Section
(3/8" = 1'-0")

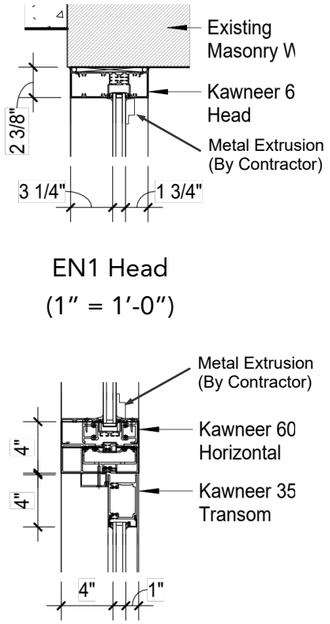

EN1 Head
(1" = 1'-0")

EN1 Transom
(1" = 1'-0")

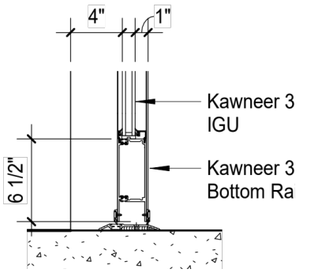

EN1 Sill
(1" = 1'-0")

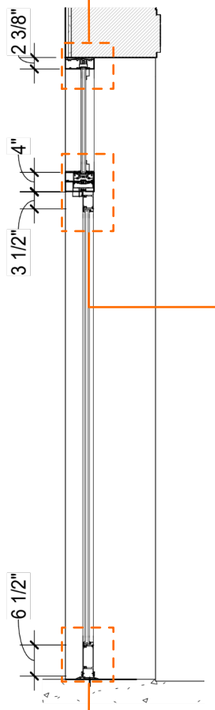

EN2 Section
(3/8" = 1'-0")

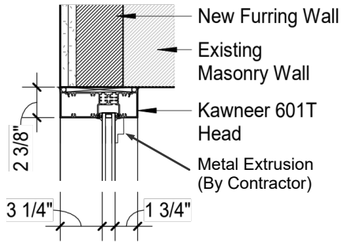

EN2 Head
(1" = 1'-0")

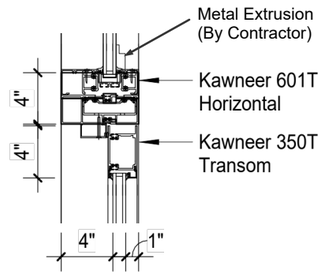

EN2 Transom
(1" = 1'-0")

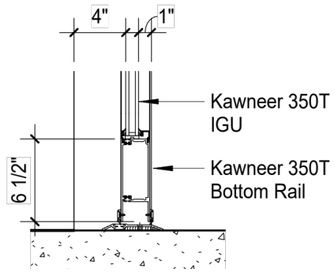

EN2 Sill
(1" = 1'-0")

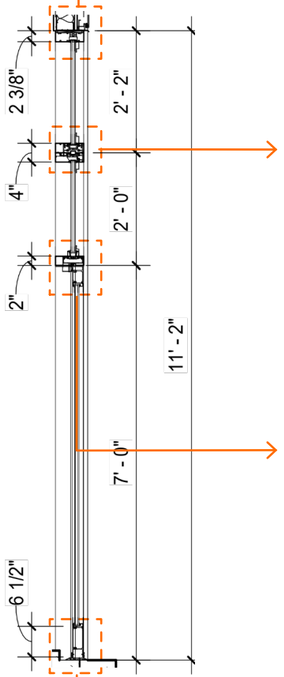

EN3 Section
(3/8" = 1'-0")

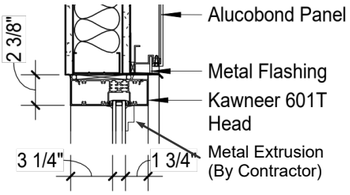

EN3 Head
(1" = 1'-0")

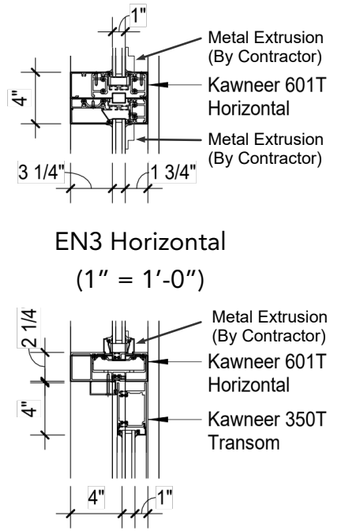

EN3 Horizontal
(1" = 1'-0")

EN3 Transom
(1" = 1'-0")

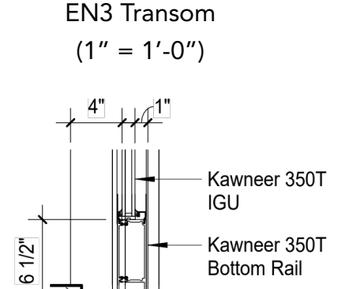

EN3 Sill
(1" = 1'-0")

MANCINI

Appendix

Enlarged Details - Entrance EN4 & EN5

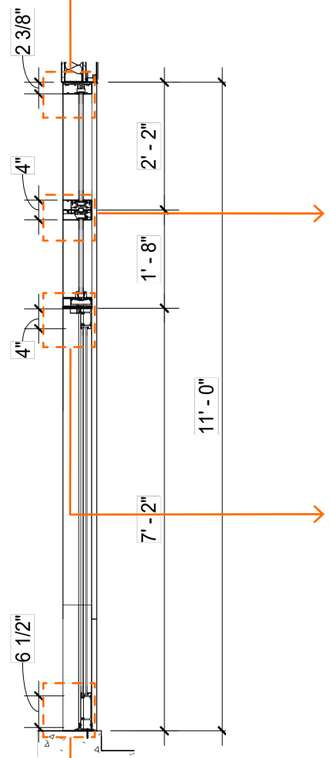

EN4 Section
(3/8" = 1'-0")

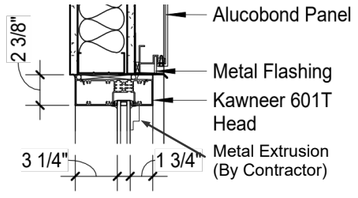

EN4 Head
(1" = 1'-0")

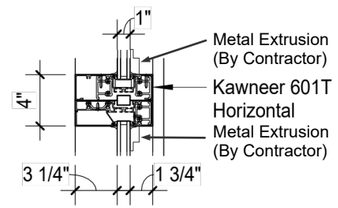

EN4 Horizontal
(1" = 1'-0")

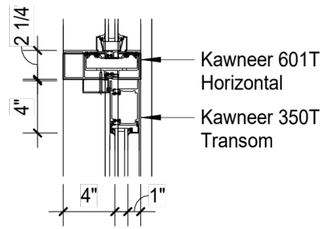

EN4 Transom
(1" = 1'-0")

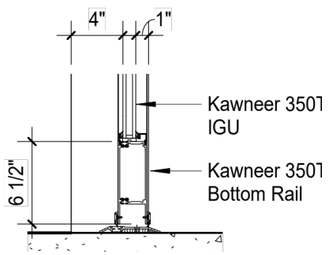

EN4 Sill
(1" = 1'-0")

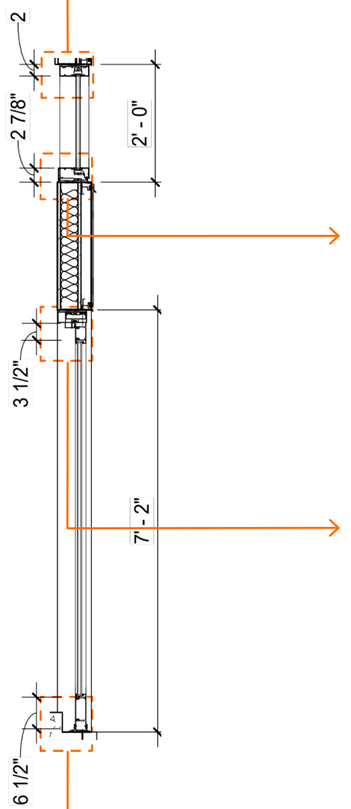

EN5 Section
(3/8" = 1'-0")

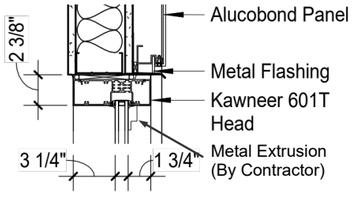

EN5 Head
(1" = 1'-0")

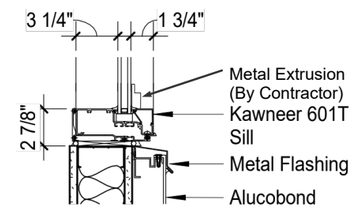

EN5 Horizontal
(1" = 1'-0")

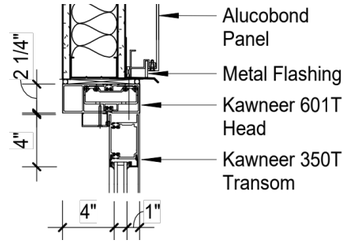

EN5 Transom
(1" = 1'-0")

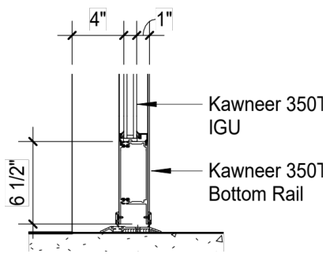

EN5 Sill
(1" = 1'-0")

MANCINI

Appendix

Enlarged Details - Typical End Wall

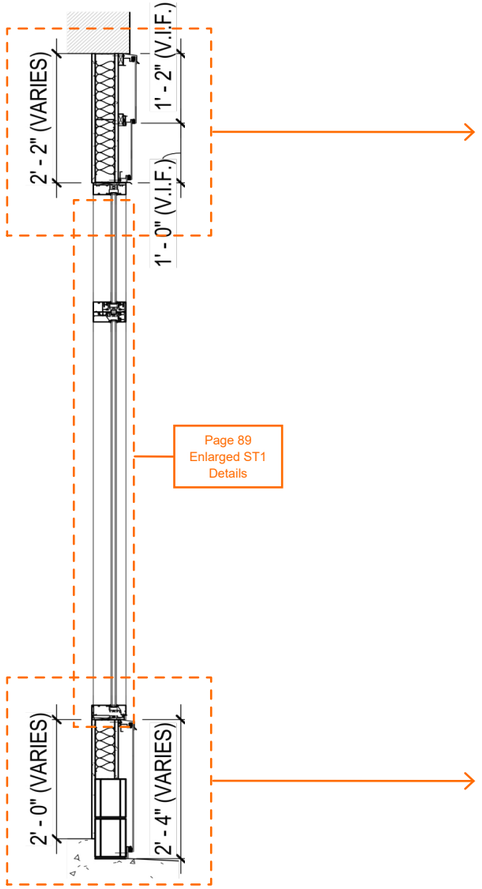

End Wall Section
(3/8" = 1'-0")

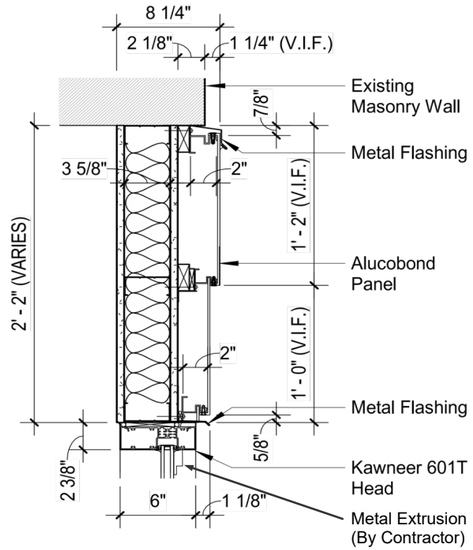

End Wall Top
(1" = 1'-0")

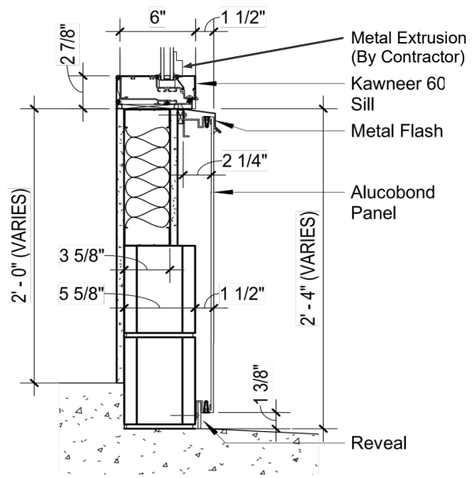

End Wall Bottom
(1" = 1'-0")

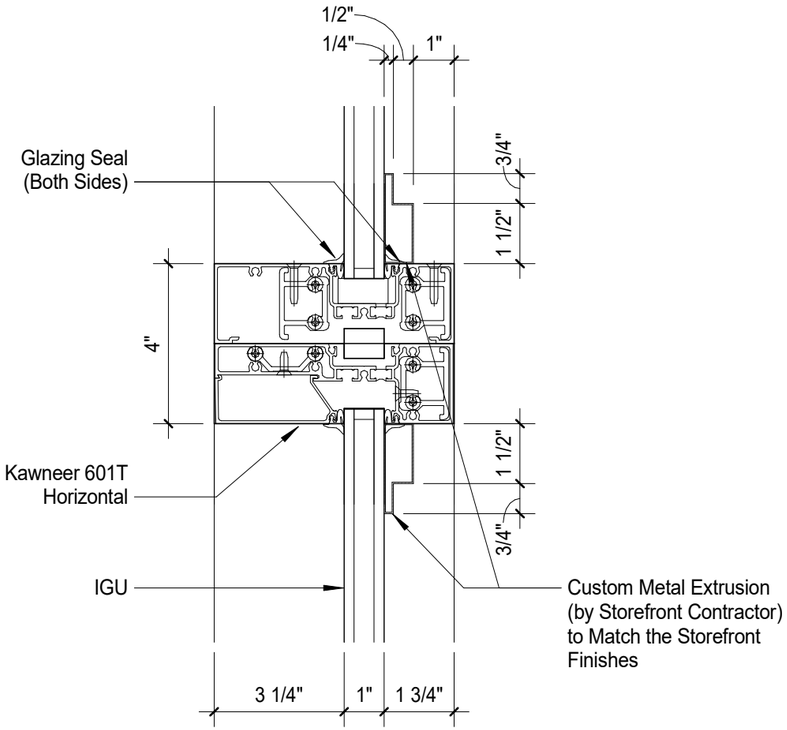

Enlarged Storefront
Mullion Detail
(3" = 1'-0")

MANCINI

Appendix

Masonry Cornice Coursing Details

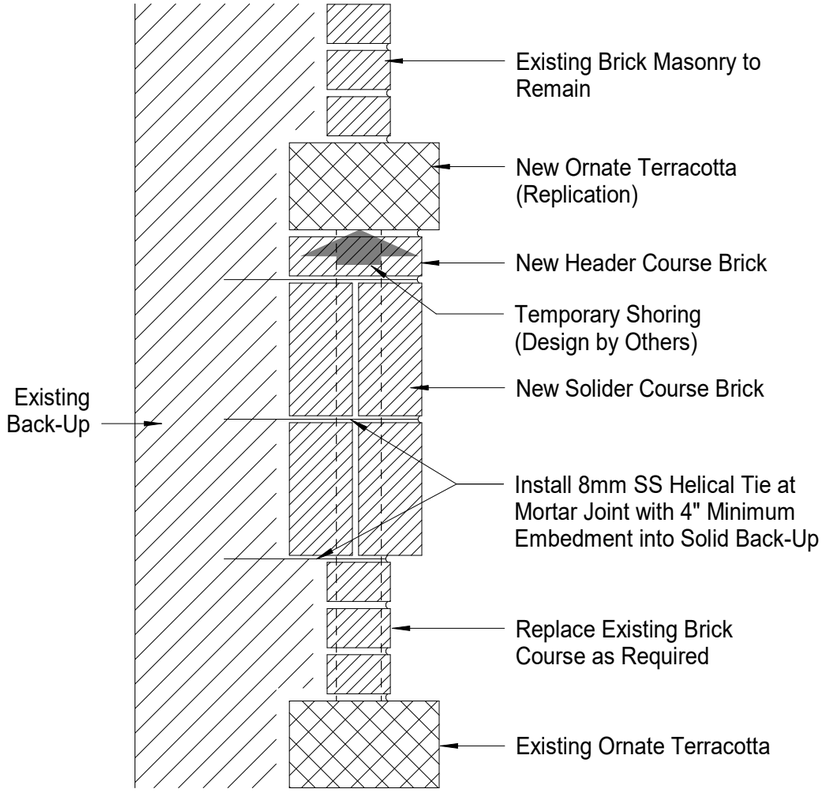

Masonry Cornice Section
(1 1/2″ = 1′-0″)

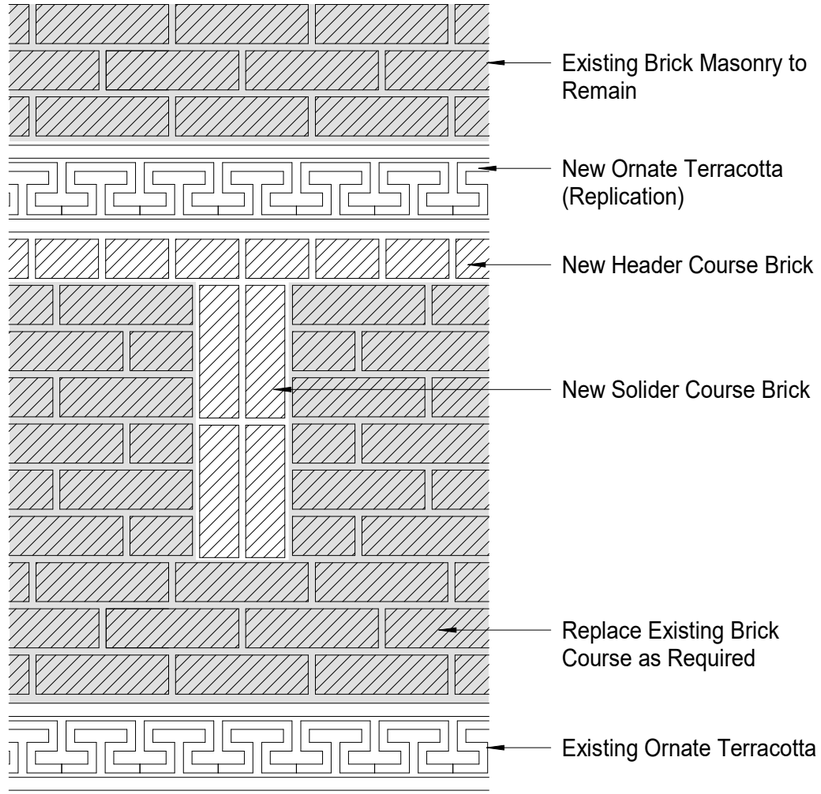

Masonry Cornice Elevation
(1 1/2″ = 1′-0″)

MANCINI:

Appendix
Guardrail Details

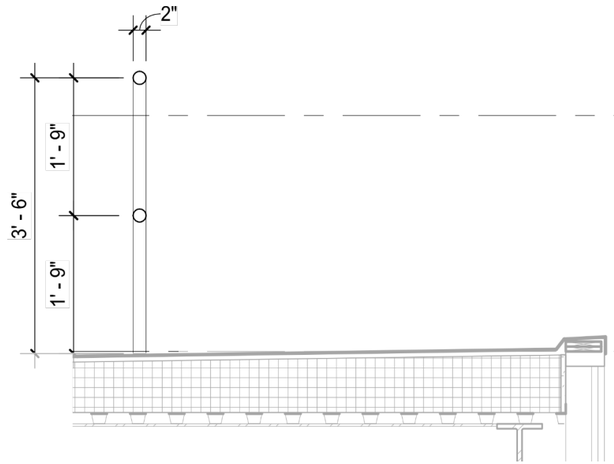

Guardrail Section
(1/2” = 1’-0”)

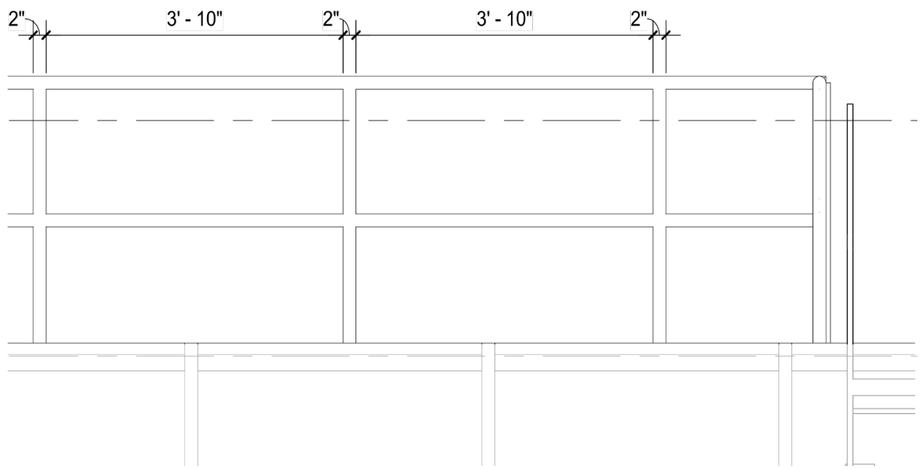

Guardrail Elevation
(1/2” = 1’-0”)

MANCINI

Appendix
Materials and Finishes

Storefront & Window & Curtain Wall System

Clear
IGU

Powder Coated
Atlantic Gray Aluminum
(Kawneer)

Masonry (2nd & 3rd Floor)

Edison Coatings Elasto Wall 351
(Color Match with BEHR Tiki Torch M180-6)

Page 101 Masonry Mortar Specifications
Page 102 Unit Masonry Specifications
Page 108 Sealants & Caulking Specifications

Security Camera Housing

Atlantic Gray
(Color Match)

Page 110 Security Camera Cutsheet

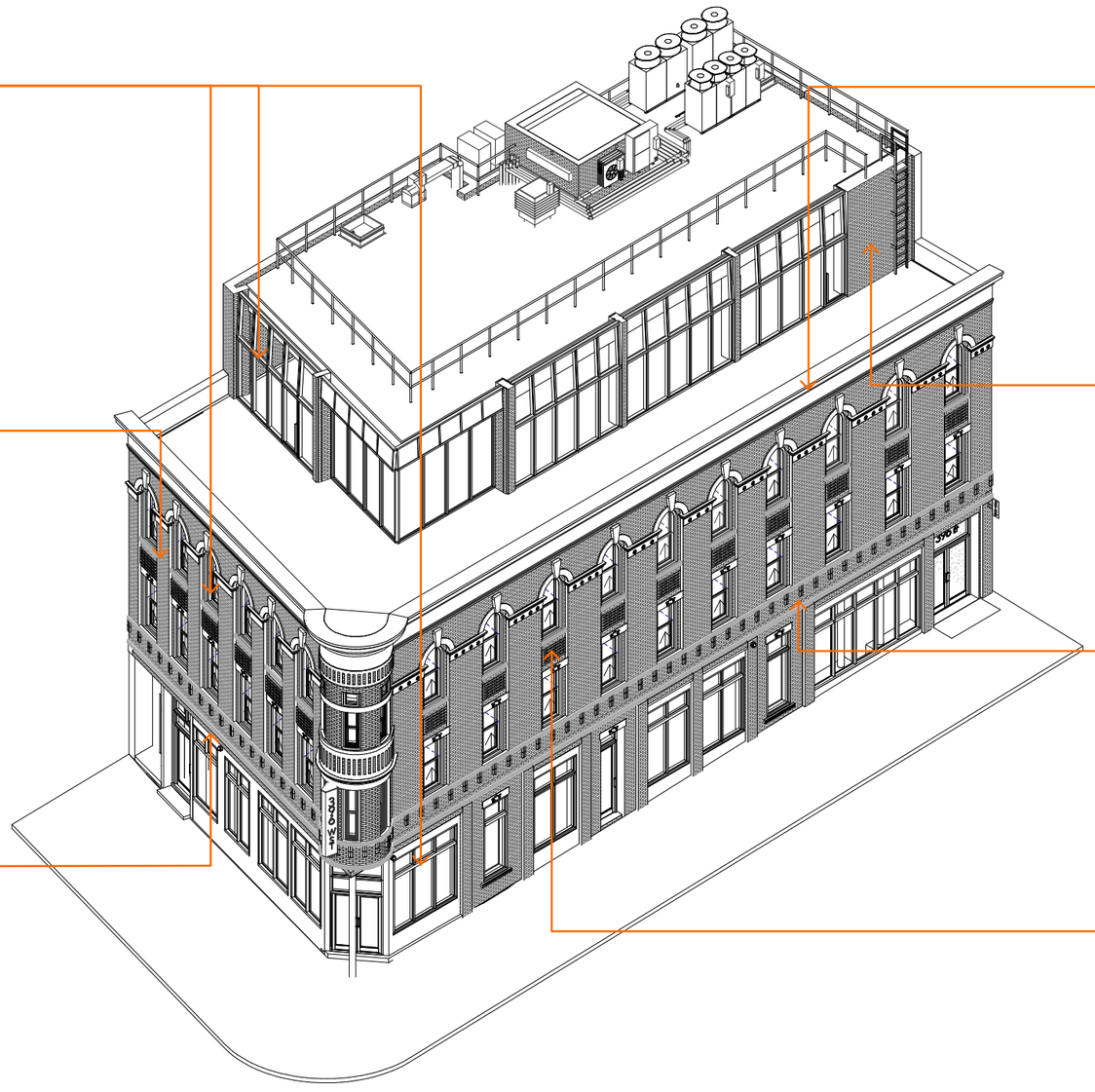

Galvanized Sheet Metal (Cornice)

Tnemic Chembuild Series 135
Black 35GR

Masonry (Penthouse)

BEHR Tiki Torch M180-6

Masonry (Ground Floor)

Edison Coatings Elasto Wall 351
(Color Match with BEHR Tibetan Orange PPU2-14)

Terracotta

Keim Restauro Mineral System Lasur + Fixativ
(Color Match with Benjamin Moore Egyptian Clay CSP-1140)

MANCINI

Appendix

South Elevation - Proposed Restoration Treatment

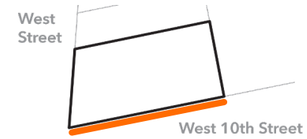

Notes:

1. Rake & Repoint All Terracotta Joints (TCOJ)
2. Scrape + Paint (S+P) Exposed Steel w/ Tnemic 'Chembuild' 135 or Equal (P-2)

Page 106 Masonry Cleaning Specifications

3. Power Wash Exist. Brick & Terracotta (500 PSI Max.) & Repaint w/ Edison Products Breathable Acrylic Coating or Equal (P-1)
4. Power Wash Exist. Pressed Galv. Sht. Mtl. (500 PSI Max.) Cornice. Solder All Open Seams. Repaint w/ Tnemic 'Chembuild' 135 or Equal
5. For Cornice Repair. Contractor to Match the Existing Cornice Components by Taking Accurate Field Measurements, Matching the Material and by Providing Shop Drawings for the Architect's Review

MANCINI

Appendix

West Elevation - Proposed Restoration Treatment

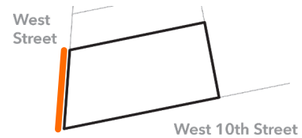

BEHR
Tiki Torch
M180-6
(Brick)

Benjamin Moore
Egyptian Clay
CSP-1140
(Terracotta)

BEHR
Tibetan Orange
PPU2-14
(Brick - GL)

BP	Page 98 Detail 1
(X)	Page 98 Detail 2
BC	Page 98 Detail 3
BR	Page 98 Detail 5/5A
LC	Page 98 Detail 4
P-1	See Specifications
PS	Page 100 Detail 10
Px	See Elevation
RA	Page 99 Detail 6
SOJ	Page 99 Detail 7
S&P	See Specifications
TCOJ	Page 98 Detail 1B
TC/ TCI	Page 98/99 Detail 4/8
TS	Page 100 Detail 9
TCR	See Specifications

Notes:

1. Rake & Repoint All Terracotta Joints (TCOJ)
2. Scrape + Paint (S+P) Exposed Steel w/ Tnemic ‘Chembuild’ 135 or Equal (P-2)
3. Power Wash Exist. Brick & Terracotta (500 PSI Max.) & Repaint w/ Edison Products Breathable Acrylic Coating or Equal (P-1)
4. Power Wash Exist. Pressed Galv. Sht. Mtl. (500 PSI Max.) Cornice. Solder All Open Seams. Repaint w/ Tnemic ‘Chembuild’ 135 or Equal
5. For Cornice Repair. Contractor to Match the Existing Cornice Components by Taking Accurate Field Measurements, Matching the Material and by Providing Shop Drawings for the Architect’s Review

Page 106 Masonry Cleaning Specifications

MANCINI:

Appendix

Existing Mortar Pointing Conditions

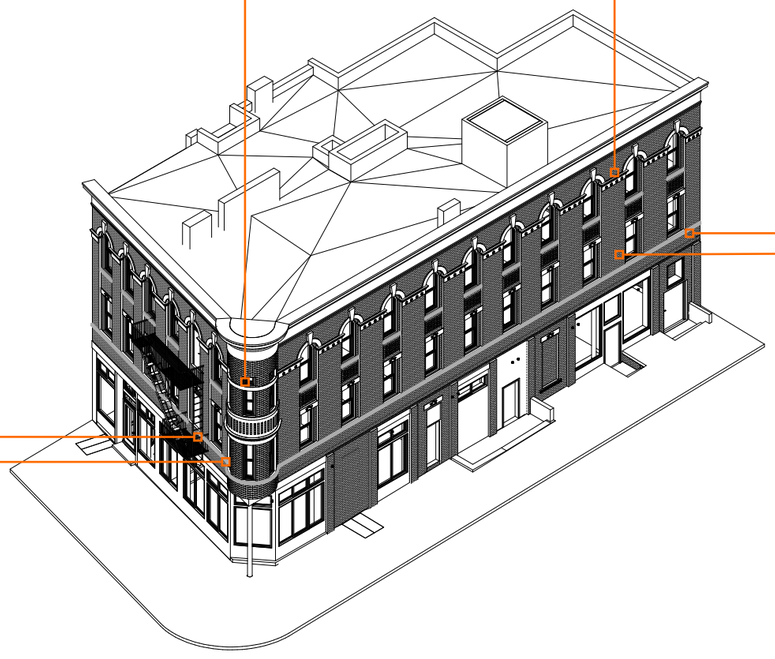

MANCINI:

Appendix

Masonry Test Cleaning Results*

* See Page 95 for Masonry Test Cleaning Documentations

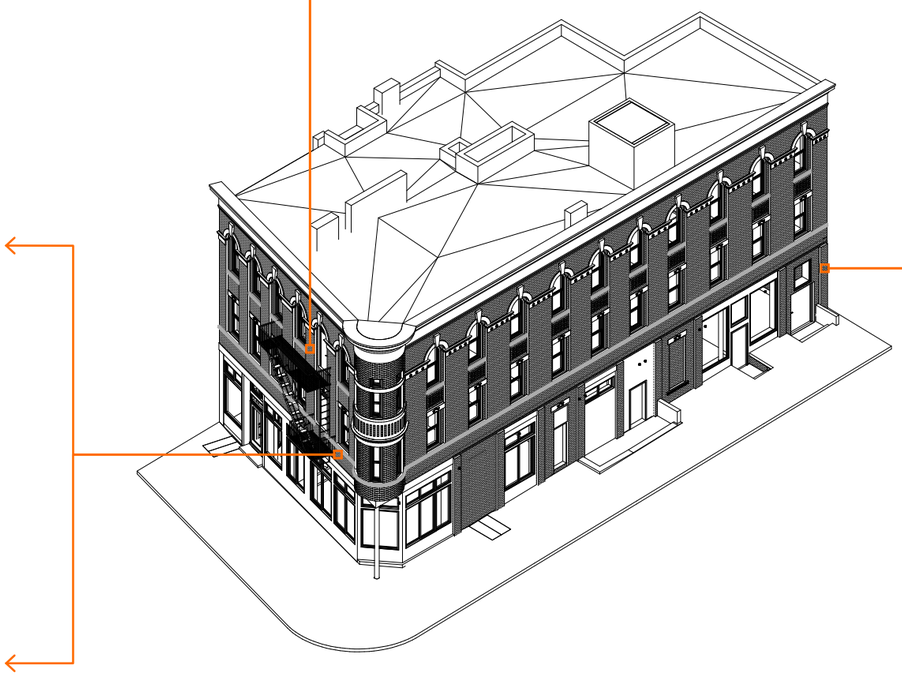

MANCINI:

Appendix

Masonry Test Cleaning Documentations

titanium

Daily Report

Project : 396 west st. Date : Tuesday, November 16, 2021

Weather: 48° cold

		No. Men	
Titanium			
	Site Superintendent		
	Competant Person	1	Loukas Murphy Safety, Site Maintenance, Front Gate and misc. Site Management, Organization
	Project Manager	0	
	Labour	0	
	Total for this Trade	1	
Milestone			
	Forman	1	Overseeing job
		2	Test cleaning at 3 locations TC-05 at the pilaster on the south fecade. TC-06 location just above the fire escape on the 3rd floor . TC-07 located ajacent to the fire escape on the 2nd floor
	Total for this Trade	3	
	Total for this Trade	0	
		0	
		0	
	Total for this Trade	0	
	Total for this Trade	0	
	Total for this Trade	()	
	Total for this Trade	()	
	Total for this Trade	()	
	Total for this Trade	()	
	Total for this Trade		
	Total	4	

Comments / Meetings / Deliveries/ Delays/ Safety
All areas of work have been walked and inspected for safety guidelines
Safety up keep, removing debris from site
Pre-tasks and daily sign in has been complete
Hot work permits filled out daily when required.
Muster point is on the cornor of West and Barrow St.
Weekly Tool box talks have been logged
All new workers have completed onsite orientation and have Osha 30 + 40HR SST card.

Superintendent
Juan Y Plasencia Registration #28624

Project Manager (Signature)
Salvatore Altieri

Competent Person
Loukas Murphy

Test Cleaning Site Report

Progress Photo (1/12)

Progress Photo (2/12)

Progress Photo (3/12)

Progress Photo (4/12)

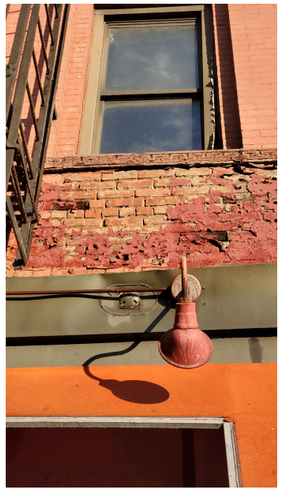

Progress Photo (5/12)

Progress Photo (6/12)

Progress Photo (7/12)

Progress Photo (8/12)

Progress Photo (9/12)

Progress Photo (10/12)

Progress Photo (11/12)

Progress Photo (12/12)

MANCINI

Appendix
Paint Analysis Report

DRAFT
SELECTIVE EXTERIOR FINISH INVESTIGATION
396 West Street
New York, NY

Prepared for:
CHAD 396 West LLC
1407 Broadway, 41st Floor
New York, NY 10018

Prepared by:
Jablonski Building Conservation
40 West 27th Street, Suite 1201
New York, NY 10001

November 11, 2021

INTRODUCTION

Jablonski Building Conservation, Inc. was retained by CHAD 396 West LLC to perform a selective paint color investigation of exterior finishes at 396 West Street located in New York City. The purpose of this investigation was to determine the earliest known painted finish layer. Architectural Conservator Helen M. Thomas-Haney from JBC visited the site on November 3, 2021 and removed a total of ten paint samples. The number of paint samples and sample locations were determined by the architect.

METHODOLOGY

Samples measuring approximately three to six millimeters in length were removed using a scalpel for further examination. In most cases, in situ cratering and close-up examination of the surfaces was performed to quickly determine the status (degree of surviving original paints) and complexity of the finishes before sample collection.

Upon returning to the laboratory, the samples were broken to reveal fresh cross-sections. Each sample was mounted in a clear resin and examined in reflected light under illumination conditions that simulate daylight (fiber optic illuminator) for the purpose of color-corrected stratigraphy identification. The samples were examined microscopically during the investigation using a Motic Stereo Zoom microscope with 10X - 63X magnification and a Zeiss Axioskop 40 polarizing light microscope with ultraviolet illuminator.

All layers have been recorded using a descriptive color name rather than a standardized color notation system. This was done to document the seriation of the samples for comparative purposes prior to the identification of early layers using both a standardized universal color system (Munsell) and a commercial paint color system (Benjamin Moore and Sherwin-Williams).

Under illumination conditions that simulate natural daylight, the earliest extant finish layers were matched to a commercially available paint system. A color designation and a representative color swatch from this system have been provided in the Summary section of this report. A chronochronology of each sample is included in Appendix A of this report. Photomicrographs are in Appendix B.

PAINT SAMPLE LOCATIONS

Sample #	Description
396West-01	Cornice, South Elevation
396West-02	Cornice, West Elevation
396West-03	Column Capital
396West-04	Column Shaft
396West-05	Column Base
396West-06	Terra Cotta, Third Story West Elevation
396West-07	Brick, Second Story West Elevation
396West-08	Brick Pilaster, First Story South Elevation
396West-09	Brick Signage Band, West Elevation
396West-10	Brick Signage Band, South Elevation

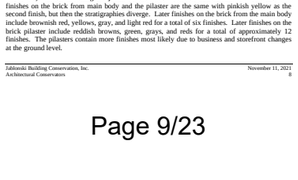

Figure 1: Sampling locations on south elevation.

Figure 2: Sampling locations on west elevation.

BRIEF HISTORY AND DESCRIPTION OF 396 WEST STREET[1]

Designed by Architect Charles Siegmayer for Albert A. Adler, 396 West Street was completed in 1904 as a three-story, neo-Renaissance style hotel. Originally named the Holland Hotel, it remains substantially unaltered on its upper two stories consisting of buff brick and white glazed terra cotta trim. The building is 6 bays along West Street and 10 bays along West 10th Street, with a round corner oriel, monumental pilasters with bossed capitals, patterned spandrel panels, second-story rectangular windows with lintels ornamented with cartouches, third-story round arches with keystones, and a projecting metal cornice ornamented with swags, dentils, and modillions. The ground story has been altered several times, but the corner cast-iron column that supports the oriel survives. The fire escape on the West Street facade was installed in the 1920s. It was designated a contributing building to the Weehawken Street Historic District in 2006.

The Holland Hotel changed ownership several times throughout the years, and numerous tenants have occupied the building. In 1910, the property was foreclosed and advertised for sale in September. It was taken over by the Crescent-Star Realty Co. Sometime before 1920, it became known as the Clyde Hotel. The hotel was acquired by the Derwood Realty Co. in 1926, which leased it the following year for 21 years to Charles E. Bacon and associates. At that time, it was announced that "extensive alterations" were to be made. (Photographs from 1927 and 1929 show a drastic change to the appearance of the building, including the addition of a fire escape to the west façade, Figures 3 and 4.) A men's furnishings business and barbershop were located here until at least 1945. The Benenson Realty Co. was the owner from 1930 until foreclosure in 1934, when it reverted to the Crescent-Star Realty Co., under William J. Hoffman, and became the New Holland Hotel. Several long-term tenants were the Remark Building Service Co., "building renovations, masonry repairs, steam cleaning, water-proofing, painting" (c. 1942-80); LTA Food

[1] Jay Shockley, *Weehawken Street Historic District Designation Report*, "396-398 West Street, East Side, between West 10th and Charles Street", New York City Landmarks Preservation Commission, (May 2, 2006), 58-60

Shop/ J&B Food Shop (c. 1945-65); and Louis Ogsinick's uniforms store (c. 1950-70). The New Holland Hotel, with 36 rooms plus stores, was purchased as a personal investment in 1950 by Arthur E. Buchwald (vice president of Sterling Investment Corp.). The property passed to Melvin Kaplan and Ernest Ohmer in 1953; Carine Realty Corp. in 1955; 396 West Street Corp. through foreclosure in 1960; Scott Lau Hotel Corp. in 1978; and in 1985 to William Gottlieb, a major investor in properties in the West Village. By 1972, Peter Rabbit, a gay bar and grill, was a commercial tenant, which remained until at least 1988.

Built during the third significant phase of the historic district's development, when it continued to be improved with residential, industrial, and commercial structures after the turn of the 20th century, this handsome 3-story, neo-Renaissance hotel, one of the last surviving hotels located along the Hudson River waterfront, contributes to the historically-mixed architectural character and varied uses – much of it maritime-related – of the Weehawken Street Historic District.

Figure 3: West Street, east side from West 10th, May 12, 1927, P.L. Sperr.[2]

[2] Irma and Paul Milstein Division of United States History, Local History and Genealogy, The New York Public Library. "Manhattan: West Street - 10th Street (West)" New York Public Library Digital Collections. Accessed November 11, 2021. https://digitalcollections.nypl.org/items/510d47dd-61c5-a3d9-e040-e00a18064a99.

Figure 4: The same, two years later. The Holland Hotel, on the north corner of West 10th, has been brightened up. March 8, 1929, P.L. Sperr.

PAINT HISTORY AND TECHNOLOGIES

Cast Iron Paint Colors

Owners and builders of cast-iron commercial structures often intended their buildings to look like stone. Popular Renaissance stone designs were faithfully copied into castings and the final product typically painted in light stone colors. Sand was sometimes added, either mixed into the paint or blown onto the wet surface, to simulate the texture of stone, though sanded paint was not used here. [3]

Zinc-based Paints

The use of zinc for paint was begun around 1840 by both the French and English. However, Messrs. Leclaire & Co. of Paris were widely recognized as the discovers of zinc paint. By 1850, imported zinc was being used on a limited scale. American manufacture of zinc paints also began around that time in New Jersey with the incorporation of the Sussex Zinc and Copper Mining and Manufacturing Company in 1849 and the New Jersey Exploring and Mining Company in 1850. The new "American Method" of making zinc oxide was simpler than the "French Method" which made it easier to produce.

Zinc paint became popular for several reasons-it was safer to produce and use than lead paint; it was cheaper to produce; and it produced a clear dead white color. Unfortunately, zinc paint lacked body and hiding power, so three to four coats of paint followed by a coat of varnish was required.[4]

[3] Margot Gayle and David W. Look, "Part I: A Historical Survey of Metals" in *Metals in America's Historic Buildings* (Washington, D.C.: U.S. Department of the Interior, National Park Service Cultural Resources Preservation Assistance, 1992): 51.
[4] Arthur Channing Downs, Jr., "Zinc for Paint and Architectural use in the 19th Century", *Bulletin of the Association for Preservation Technology*, vol. 8, No.4 (1976), 80-99.

FINDINGS

The painted finishes on the exterior of 396 West Street are severely deteriorated. The paint is peeling, and layers are missing throughout the facades. The building's history of foreclosure and various owners and tenants also makes the surviving paint record difficult to piece together. However, some patterns emerge.

The brick and terra cotta façade was not originally painted. The brick is a buff-colored face brick. The terra cotta has a white glazed surface. Soiling is present directly on the substrates further indicating that these materials were originally exposed.

The earliest painted finishes on the sheet metal cornice and cast iron column are pale yellowish white, which coordinate with the white glaze color of the terra cotta trim. Both terra cotta and cast iron were historically used to simulate stone, so their white color could have been used to mimic marble or limestone.

The signage band between the ground floor and second story is red common brick. It is probable that this band was originally covered with signage or a cornice, so a less expensive common brick was used. Also, wood blocking and steel beams are visible within the wall among the bricks, most likely used to mount the signage or cornice.

Figure 5: Wood block and steel beams in the signage band, most likely used to mount signage or a cornice.

Cornice

The contractor, Titanium Construction Service, removed two sections of the sheet metal cornice for JBC to sample. One section was from the south elevation (sample 396West-01), and one was from the west elevation (sample 396West-02). Very little paint remains on the cornice. Where paint is present, it is only a few layers. Paint samples were removed from the crevasses to try to capture the most layers.

The earliest retained finish, found in a fragment embedded in later layers, is an orange primer, followed by two layers of yellowish white (between Munsell 2.5Y 8/2 & 8/4) paint matching Benjamin Moore 185 "Precious Ivory", topped with a strong yellowish brown (Munsell 10YR 4/8) varnish matching Benjamin Moore 1049 "Toasted Marshmallow". Later finishes on the fragment include two yellow finishes. The majority of the cornice retains four finishes consisting of green, two gray paints, and black. Due to the low number of retained finishes, it is unknown if the earliest finish is original.

Earliest Finish
Cornice

Benjamin Moore
185
Precious Ivory

Finish Varnish
Cornice

Benjamin Moore
1049
Toasted
Marshmallow

Cast Iron Column

The earliest retained finish on the cast iron column capital consists of a white (Munsell 10Y 9/1) paint matching Benjamin Moore OC-69 "White Opulence." This color coordinates with the white glaze on the terra cotta. This finish is a zinc paint which was typically applied in several layers with a varnish layer over top. No varnish was apparent. However, a heavy layer of soiling is present. It is possible that the varnish eroded away from exposure. The sample retains eighteen finishes consisting of green, yellow, light orange, blue green, blue, white, pale pink, red, black, and the current gray.

Earliest Finish
Cast Iron Capital

Benjamin Moore
OC-69
White Opulence

The earliest finish found on the column shaft corresponds with the tenth layer on the capital. It is likely that the shaft was painted the same color as the capital.

The earliest finish found on the column base is a light brown (Munsell 7.5YR 6/4) paint matching Benjamin Moore HC-46 "Jackson Tan". It is not clear if this is the original color. The sample retains thirteen finishes consisting of yellow, green, pink, blue, red, and black

Earliest Finish
Column Base

Benjamin Moore
HC-46
Jackson Tan

Terra Cotta

The earliest painted finish found on the terra cotta is a dark grayish yellowish brown (Munsell 10YR 2/2) paint matching Sherwin Williams SW 9183 "Dark Clove". The terra cotta has a white glaze and was originally not painted. Later finishes include pale yellowish white, reddish brown, gray, and light red for a total of six finishes.

Earliest Painted Finish
Terra Cotta

Sherwin Williams
SW9183
Dark Clove

Brick Wall and Pilaster

The brick used for the main body of the building and the ground floor pilasters is a buff-colored face brick. The use of buff face brick and the presence of soiling on the brick indicate that it was not originally painted.

The earliest painted finish on these brick elements is a yellowish-white (Munsell 5Y 9/2) paint matching Benjamin Moore OC-107 "Antiquity", followed by a strong yellowish-brown (Munsell 10YR 4/8) varnish matching Benjamin Moore 1049 "Toasted Marshmallow." The first two finishes on the brick from main body and the pilaster are the same with pinkish yellow as the second finish, but then the stratigraphies diverge. Later finishes on the brick from the main body include brownish red, yellows, gray, and light red for a total of six finishes. Later finishes on the brick pilaster include reddish browns, green, grays, and reds for a total of approximately 12 finishes. The pilasters contain more finishes most likely due to business and storefront changes at the ground level.

Earliest Painted Finish
Brick Wall and Pilaster

Benjamin Moore
OC-107
Antiquity

Earliest Finish
Varnish
Brick Wall and Pilaster

Benjamin Moore
1049
Toasted
Marshmallow

Signage Band

The earliest painted finish on the bricks in the signage band is a yellowish white (between Munsell 2.5Y 8/2 and 8/4) zinc paint matching Benjamin Moore 185 "Precious Ivory" topped with a thin, strong yellowish-brown (Munsell 10YR 4/8) varnish matching Benjamin Moore 1049 "Toasted Marshmallow". The signage band was most likely originally covered, and the first painted finish appears to line up with the third finish from the pilasters (396West-08). Subsequent layers include grays, red, yellows, and green for a total of seven finishes.

Earliest Painted Finish
Signage Band

Benjamin Moore
185
Precious Ivory

Earliest Finish
Varnish
Signage Band

Benjamin Moore
1049
Toasted
Marshmallow

Appendix A
Paint Chromochronologies

396 West Street

TYPICAL PAINT CHROMOCHRONOLOGY AND COLOR MATCH

SAMPLE NUMBERS AND LOCATIONS: 396West-01 Cornice, South Elevation; 396West-02 Cornice, West Elevation

SUBSTRATE: Metal

CHROMOCHRONOLOGY	PRIMER/ FINISH	COMMERCIAL MATCH	MUNSELL MATCH
1. Orange Red	**Primer**		
2. Yellowish white	**Base**	**BM 185**	**2.5Y 8/2 & 8/4**
3. Yellowish white	**Finish**	**BM 185**	**2.5Y 8/2 & 8/4**
4. Yellowish brown	**Varnish**	**BM 1049**	**10YR 4/8**
5. Yellow	Primer		
6. Yellow	Finish		
7. Yellow	Finish		
8. Brown	Primer		
9. Green	Finish		
10. Orange	Primer		
11. Gray	Base		
12. Gray	Finish		
13. Orange	Primer		
14. Gray	Finish		
15. Black	Finish		

Notes:
Sample 396West-01 is typical.
Most of the cornice samples/pieces start with the brown primer (layer 8) and green finish (layer 9).
A fragment of early paint layers is present among the later layers on sample 396West-01

MANCINI:

Appendix
Paint Analysis Report

TYPICAL PAINT CHROMOCHRONOLOGY AND COLOR MATCH

SAMPLE NUMBERS AND LOCATIONS: 396West-03 Column Capital; 396West-04 Column Shaft

SUBSTRATE: Cast Iron

CHROMOCHRONOLOGY	PRIMER/ FINISH	COMMERCIAL MATCH	MUNSELL MATCH
1. White	**Primer**		
2. White	**Finish**	**BM OC-69**	**10Y 9/1**
3. Green (trace)	Finish		
4. Yellow	Finish		
5. Yellow	Finish		
6. Light orange	Finish		
7. Blue green	Finish		
8. Light blue green	Primer		
9. Light blue green	Finish		
10. Blue green	Finish		
11. Light blue	Finish		
12. White	Primer		
13. Pale yellowish white	Base		
14. White	Finish		
15. Pale pink	Finish		
16. Blue	Finish		
17. Red	Finish		
18. Red	Primer		
19. Red	Finish		
20. Yellow	Primer		
21. Yellow	Finish		
22. Black	Finish		
23. Black	Finish		
24. Gray	Finish		
25. Light green	Finish		
26. Gray	Finish		

Notes:
Sample 396West-03 is typical.
Sample 396West-04 starts at layer 11.

Page 13/23

PAINT CHROMOCHRONOLOGY AND COLOR MATCH

SAMPLE NUMBERS AND LOCATIONS: 396West-05 Column Base

SUBSTRATE: Cast Iron

CHROMOCHRONOLOGY	PRIMER/ FINISH	COMMERCIAL MATCH	MUNSELL MATCH
1. Light brown	**Primer**		
2. Light brown	**Finish**	**BM HC-46**	**7.5Y 6/4**
3. Light brown	Primer		
4. Light brown	Base		
5. Brown	Varnish		
6. Yellow	Finish		
7. Green	Primer		
8. Green	Finish		
9. White	Finish		
10. Pale pink	Finish		
11. Blue	Primer		
12. Blue	Finish		
13. Green	Primer		
14. Green	Finish		
15. Red	Finish		
16. Red	Primer		
17. Red	Finish		
18. Black	Finish		
19. Black	Finish		
20. Black	Finish		
21. Black	Finish		
22. Gray	Finish		

Notes:

Page 14/23

PAINT CHROMOCHRONOLOGY AND COLOR MATCH

SAMPLE NUMBERS AND LOCATIONS: 396West-06 Terra cotta, Third Story West elevation

SUBSTRATE: Terra Cotta

CHROMOCHRONOLOGY	PRIMER/ FINISH	COMMERCIAL MATCH	MUNSELL MATCH
1. Dark grayish yellowish brown	**Finish**	**SW 9183**	**10YR 2/2**
2. Pale yellowish white	Finish		
3. Reddish brown	Finish		
4. Gray (trace)	Finish		
5. Reddish brown	Finish		
6. Pinkish white	Primer		
7. Red	Finish		
8. Red	Primer		
9. Red	Finish		

Notes:
The terra cotta has a white glaze and was not originally painted.

Page 15/23

PAINT CHROMOCHRONOLOGY AND COLOR MATCH

SAMPLE NUMBERS AND LOCATIONS: 396West-07 Brick, Second Story West elevation

SUBSTRATE: Brick

CHROMOCHRONOLOGY	PRIMER/ FINISH	COMMERCIAL MATCH	MUNSELL MATCH
1. Yellowish white	**Primer**	**BM OC-107**	**5Y 9/2**
2. Yellowish white	**Base**	**BM OC-107**	**5Y 9/2**
3. Strong yellowish brown	**Varnish**	**BM 1049**	**10YR 4/8**
4. Pinkish yellow	Primer		
5. Pinkish orange	Finish		
6. Dark red	Primer		
7. Dark red	Finish		
8. Light yellow	Primer		
9. Yellow	Base		
10. Yellowish brown	Varnish		
11. Gray	Primer		
12. Gray	Finish		
13. White	Primer		
14. Red	Finish		

Notes:
The face brick is buff-colored and was not originally painted.

Page 16/23

PAINT CHROMOCHRONOLOGY AND COLOR MATCH

SAMPLE NUMBERS AND LOCATIONS: 396West-08 Brick Pilaster, First Story West Elevation

SUBSTRATE: Brick

CHROMOCHRONOLOGY	PRIMER/ FINISH	COMMERCIAL MATCH	MUNSELL MATCH
1. Yellowish white	**Primer**	**BM OC-107**	**5Y 9/2**
2. Yellowish white	**Base**	**BM OC-107**	**5Y 9/2**
3. Strong yellowish brown	**Varnish**	**BM 1049**	**10YR 4/8**
4. Pinkish yellow	Primer		
5. Pinkish orange	Finish		
6. Pale yellowish white	Primer		
7. Pale yellowish white	Base		
8. Yellowish brown	Varnish		
9. Reddish brown	Finish		
10. Green	Finish		
11. Gray	Finish		
12. Gray	Finish		
13. Bluish gray	Finish		
14. Gray	Primer		
15. Gray	Finish		
16. Black	Finish		
17. White	Primer		
18. Red	Finish		
19. Red	Finish		

Notes:
The face brick on the pilaster is buff-colored and was not originally painted.

Page 17/23

TYPICAL PAINT CHROMOCHRONOLOGY AND COLOR MATCH

SAMPLE NUMBERS AND LOCATIONS: 396West-09 Brick Signage Band, West Elevation; 396West-010 Brick Signage Band, South Elevation

SUBSTRATE: Brick

CHROMOCHRONOLOGY	PRIMER/ FINISH	COMMERCIAL MATCH	MUNSELL MATCH
1. Yellowish white	**Primer**	**BM 185**	**2.5Y 8/2 & 8/4**
2. Yellowish white	**Base**	**BM 185**	**2.5Y 8/2 & 8/4**
3. Strong yellowish brown	**Varnish**	**BM 1049**	**10YR 4/8**
4. Gray	Finish		
5. Red	Primer		
6. Red	Finish		
7. Olive green	Finish		
8. Yellow	Finish		
9. Brown	Finish		
10. White	Primer		
11. Red	Finish		
12. Red	Finish		

Notes:
The signage band was most likely not painted originally. The use of common red brick and wood blocks and imbedded steel suggest that the band was covered with an element mounted to the wall.

Page 18/23

Appendix B
Photomicrographs

122 East 42nd Street

Page 19/23

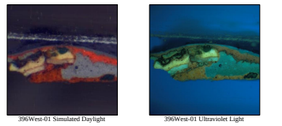
396West-01 Simulated Daylight

396West-01 Ultraviolet Light

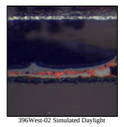
396West-02 Simulated Daylight

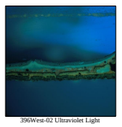
396West-02 Ultraviolet Light

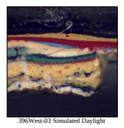
396West-03 Simulated Daylight

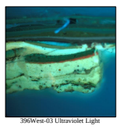
396West-03 Ultraviolet Light

Page 20/23

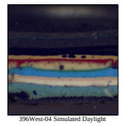
396West-04 Simulated Daylight

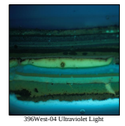
396West-04 Ultraviolet Light

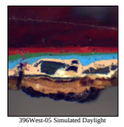
396West-05 Simulated Daylight

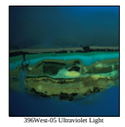
396West-05 Ultraviolet Light

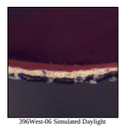
396West-06 Simulated Daylight

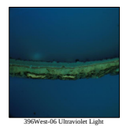
396West-06 Ultraviolet Light

Page 21/23

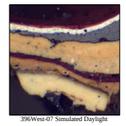
396West-07 Simulated Daylight

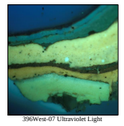
396West-07 Ultraviolet Light

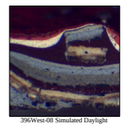
396West-08 Simulated Daylight

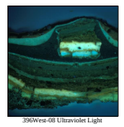
396West-08 Ultraviolet Light

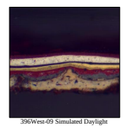
396West-09 Simulated Daylight

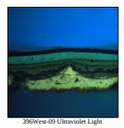
396West-09 Ultraviolet Light

Page 22/23

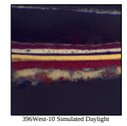
396West-10 Simulated Daylight

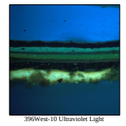
396West-10 Ultraviolet Light

Page 23/23

MANCINI:

Appendix

Masonry Restoration & Rehabilitation Details

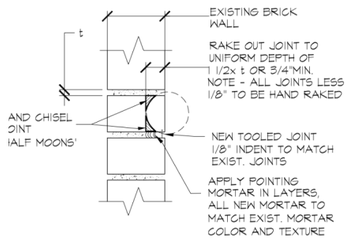

1A [BP] BRICK JOINT REPAIR

N.T.S.

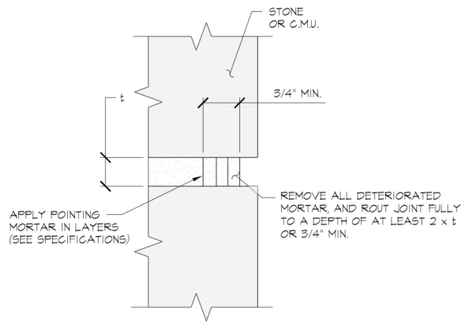

[TCOJ] / [LSOJ] / [GSOJ] TERRA COTTA/STONE OPEN JOINT REPAIR

1B

N.T.S.

NOTE:
1. SEE 4/S-002 FOR JTS. AT HORIZ. SURFACE.

1 MORTAR JOINT POINTING DETAILS

N.T.S.

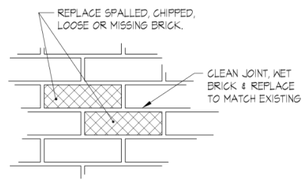

2 [BS/BM] SPALLED BRICK REPLACEMENT DETAIL

N.T.S.

NOTES:

1) NEW BRICK TO MATCH EXISTING IN SIZE, COLOR AND TEXTURE.
2) ANY ADJACENT BRICKS THAT BECOME LOOSE ARE TO BE REPLACED W/ NEW TO MATCH EXISTING.
3) USE THIS DETAIL IN CONJUNCTION WITH 1A/S-002.

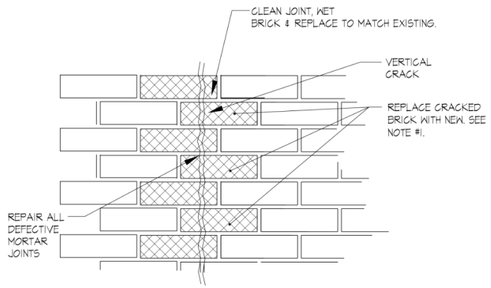

3 [BC] CRACKED BRICK REPAIR DETAIL

N.T.S.

NOTES:

1) NEW BRICK TO MATCH EXISTING IN SIZE, COLOR AND TEXTURE.
2) ANY ADJACENT BRICKS THAT BECOME LOOSE ARE TO BE REPLACED W/ NEW TO MATCH EXISTING.
3) USE THIS DETAIL IN CONJUNCTION WITH 1A/S-002 & 2/S-002.

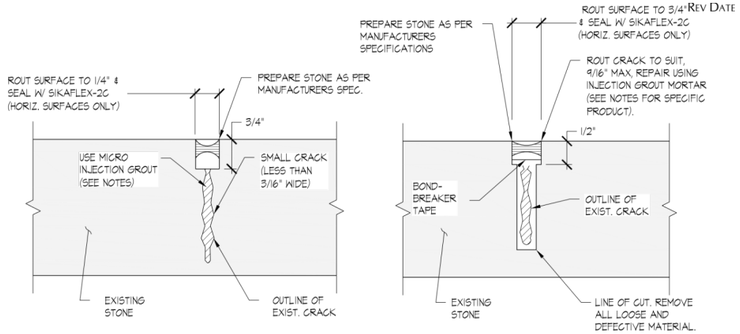

4A SMALL CRACK REPAIR DETAIL

N.T.S.

4B MODERATE CRACK REPAIR DETAIL

N.T.S.

[LC] OR [TC] LIMESTONE OR TERRACOTTA PARTIAL PENETRATION CRACK REPAIR DETAILS

4

SCALE: N.T.S.

NOTES:
1) MATCH EXISTING ARCHITECTURAL PROFILES ON SURFACE OF TERRACOTTA OR LIMESTONE ORNAMENTS WHERE APPLICABLE.
2) LIMESTONE IS TO BE REPAIRED WITH JAHN M70 REPAIR MORTAR. SEE DTL. 2/S-003.
3) TERRACOTTA IS TO BE REPAIRED WITH JAHN M110 REPAIR MORTAR. SEE DTL. 2/S-003.

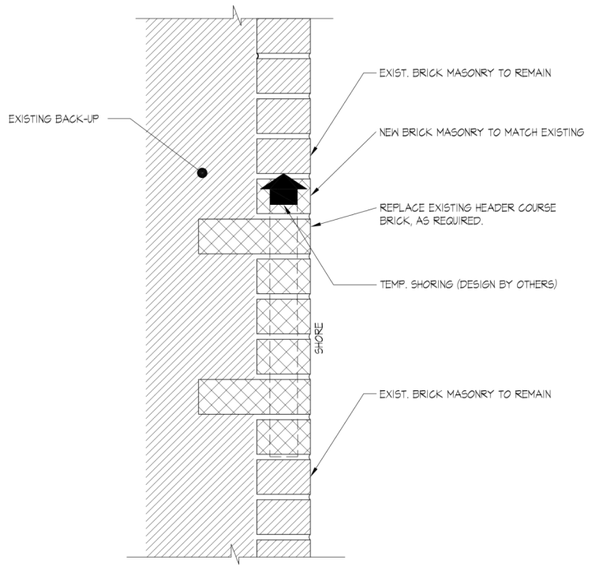

5 [BR] BRICK REMOVAL & BULGING BRICK REPAIR

N.T.S.

NOTES:

1) NEW BRICK TO MATCH EXISTING IN SIZE, COLOR AND TEXTURE.
2) SHORE EXISTING BRICK AS REQUIRED.

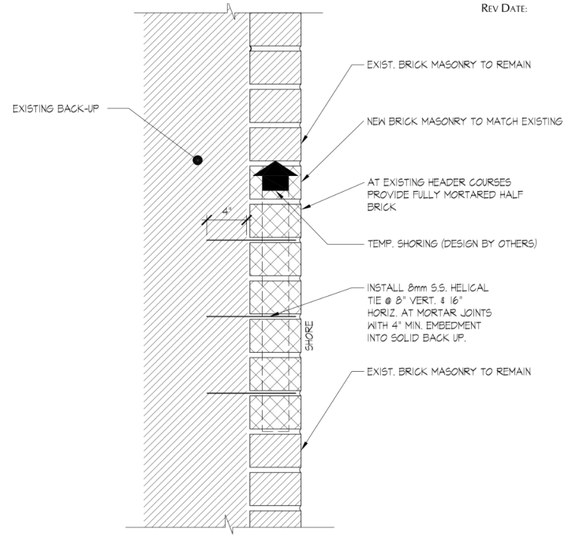

[BR] BRICK REMOVAL & BULGING BRICK REPAIR (ALTERNATE)

5A

N.T.S.

NOTES:

1) NEW BRICK TO MATCH EXISTING IN SIZE, COLOR AND TEXTURE.
2) SHORE EXISTING BRICK AS REQUIRED.

MANCINI

Appendix

Masonry Restoration & Rehabilitation Details

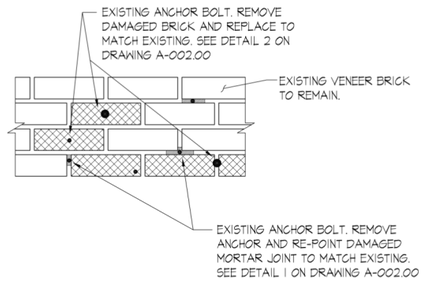

6 [RA] TYPICAL ANCHOR REMOVAL DETAIL

N.T.S.

NOTE(S):

1) NEW BRICK TO MATCH EXISTING IN SIZE, COLOR AND TEXTURE.
2) ANY ADJACENT BRICKS THAT BECOME LOOSE ARE TO BE REPLACED W/ NEW TO MATCH EXISTING.
3) USE THIS DETAIL IN CONJUNCTION WITH 1/A-002 & 2/A-002.

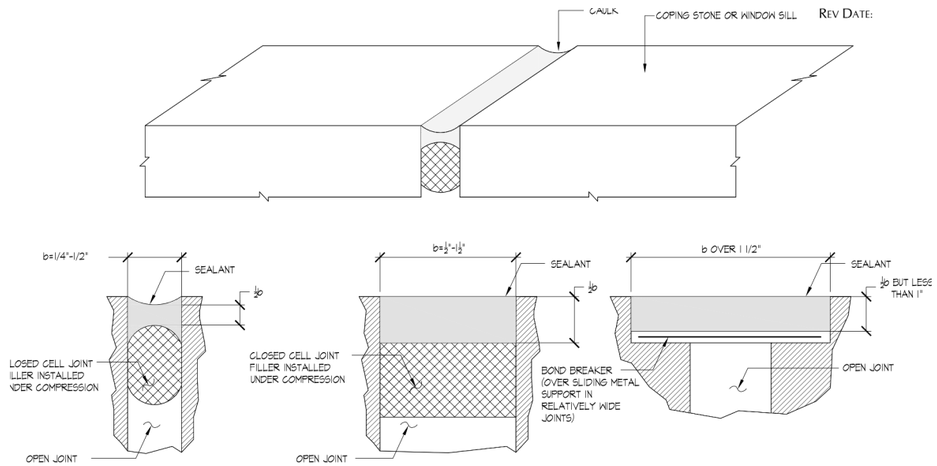

7 [SOJ] TYPICAL CAULKING JOINT

N.T.S.

1. THIS DETAIL IS FOR JOINTS AT HORIZONTAL SURFACES (SKY JTS.) OR VERTICAL CONTROL JOINTS.
2. FOR VERTICAL MORTAR JOINT REPAIR SEE DETAIL 1B/S-002.

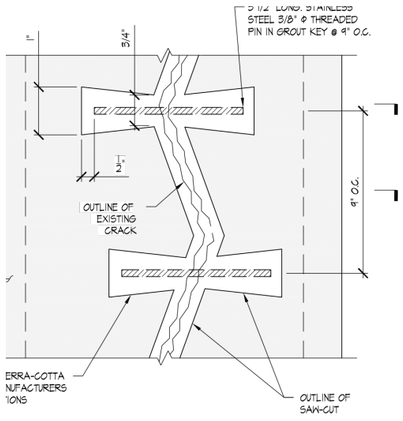

8A CRACK WITHOUT SPALLING REPAIR

N.T.S.

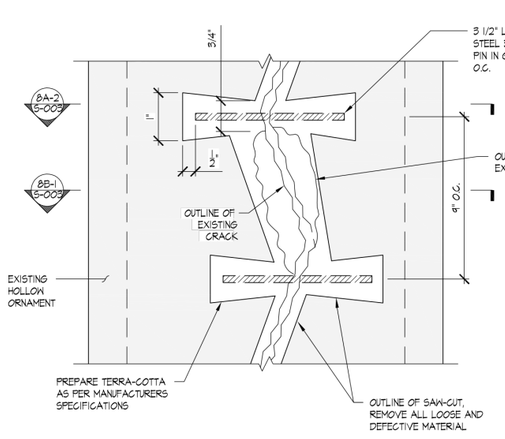

8B CRACK WITH SPALLING REPAIR

N.T.S.

8 [TCI] LARGE CRACK @ TERRA-COTTA ORNAMENT REPAIR DETAILS

SCALE: AS NOTED

NOTE(S):
1) MATCH EXISTING ARCHITECTURAL PROFILES ON SURFACE OF TERRA-COTTA ORNAMENTS WHERE APPLICABLE
2) GLAZE PATCHED TERRA COTTA TO MATCH EXISTING, REF. SPEC #09900.

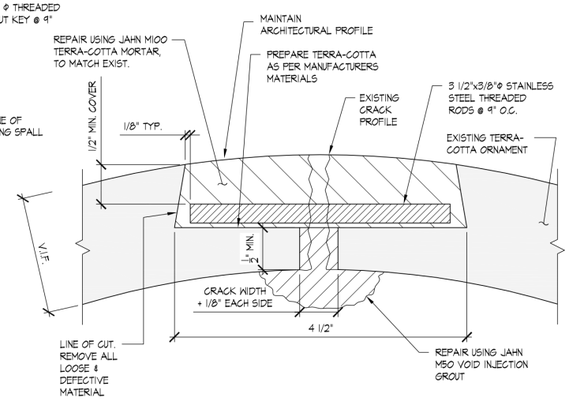

8A-2 SECTION @ KEYED PORTION

N.T.S.

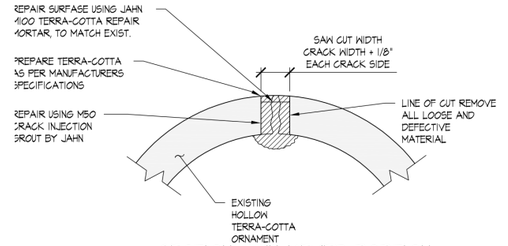

8A-1 SECTION @ UN-KEYED PORTION

N.T.S.

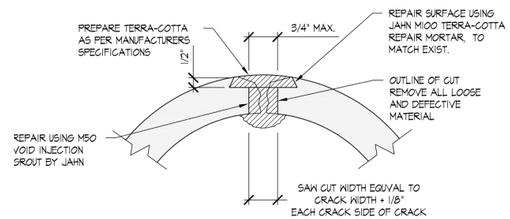

8B-1 SECTION @ UN-KEYED PORTION

N.T.S.

MANCINI:

Appendix

Masonry Restoration & Rehabilitation Details

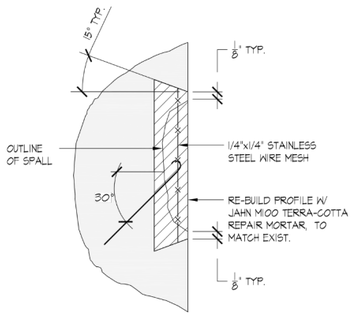

9A SECTION @ SPALL IN SOLID ORNAMENT
N.T.S.

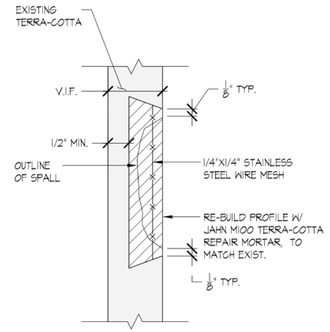

9B SECTION @ SPALL IN HOLLOW ORNAMENT
N.T.S.

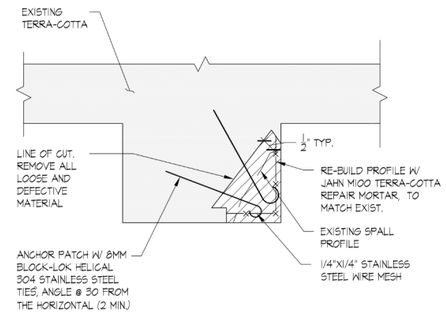

9C PLAN VIEW @ SPALL IN SOLID ORNAMENT
N.T.S.

9 [TS] TERRA-COTTA ORNAMENT SPALL REPAIR DETAILS
SCALE: AS NOTED

NOTES:
1) MATCH EXISTING ARCHITECTURAL PROFILES ON SURFACE OF TERRA-COTTA ORNAMENTS WHERE APPLICABLE.
2) GLAZE PATCHED TERRA-COTTA TO MATCH EXISTING. REFER TO SPECIFICATION #09900.

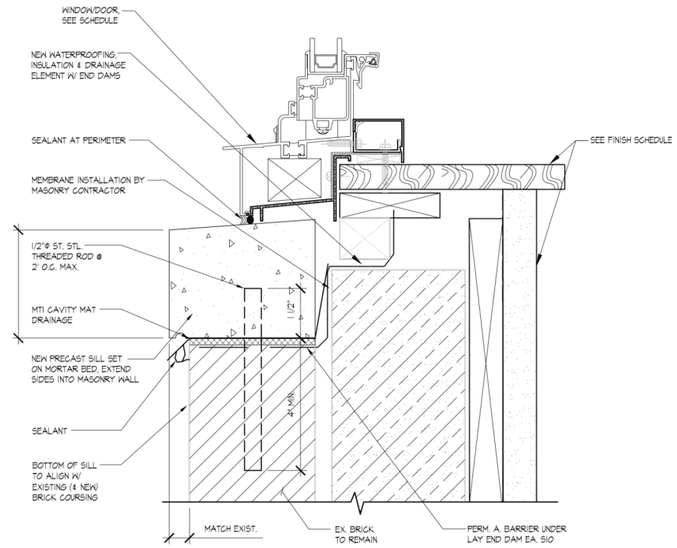

10 [PS] NEW PRECAST WINDOW/DOOR SILL
N.T.S.

NOTE:
1. PRECAST COLOR TO MATCH ORIGINAL ADJACENT STONE AT FACADE

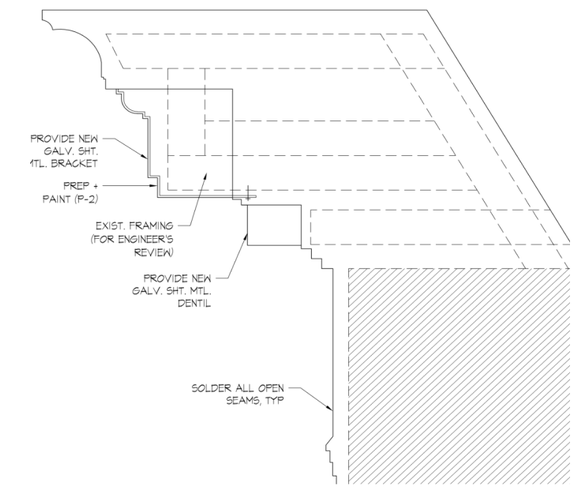

11 TYPICAL CORNICE REPAIR
N.T.S.

MANCINI

Appendix
Specifications - Masonry Mortar

SECTION 04100
MASONRY MORTARS

PART 1 - GENERAL

1.1 RELATED DOCUMENTS:

A. General Contract Provisions apply to Work of this Section.

1.2 WORK SUMMARY:

A. This specification covers mortars for use in the construction of all new unit masonry as may be required for the project. In this specification, the term mortar shall be understood to mean mortar composed of portland cement, hydrated lime, sand and water. At the option of the Contractor, patent mix may be substituted.

B. Mortar Designations and Locations: See Article 2.15, Section 04200 - Unit Masonry.

1.3 RELATED WORK SPECIFIED ELSEWHERE:

A. Section 04200 - Unit Masonry.

B. Section 07900 – Sealants and Caulking

1.4 REFERENCE STANDARDS:

A. ASTM Standards C5-79(R84), Quicklime for Structural Purpose; C91-83a, Masonry Cement; C144-87, Aggregate for Masonry Mortar, C150-86, Portland Cement; C207-79(R84), Hydrated Lime for Masonry Purposes; C270-89, Mortar for Unit Masonry; C387-83, Packaged, Dry Combined Materials for Mortar and Concrete; C476-83, Mortar and Grout for Reinforced Masonry.

B. "Portland Cement Lime Mortars for Brick Masonry" by the Brick Institute of America (McLean, Virginia).

1.5 SUBMITTALS:

A. Certification of Specification Compliance.

B. Mix Design.

C. Reports of quality control testing.

D. Provide mortar samples to the Architect for approval.

Masonry Mortar (1/4)

1.6 REQUIREMENTS AND RESTRICTIONS:

A. All manufactured materials shall be delivered to the job site in unopened factory sealed containers clearly labeled as to product, manufacturer, use and/or other pertinent characteristics.

B. All packaged and loose materials shall be stored under proper environmental conditions to prevent contamination from excessive temperature changes, foreign materials and the like that may have an adverse effect on same.

1. All perishable materials shall be properly protected and stored in weathertight structures, with floor raised not less than 1'-0" above adjoining grade OR, for short intervals, on raised platforms and covered with waterproof tarps.

2. Aggregates shall be stored in clean bins, scows, or platforms having hard, clean surfaces.

3. Aggregates of different kinds and sizes shall be placed in different stockpiles.

C. No air-entraining admixtures or cementitious materials containing air-entraining admixtures shall be used in the mortar. No antifreeze compounds or other substances shall be used in the mortar to lower the freezing point. Calcium chloride or admixtures containing same shall not be used in mortar in which reinforcement, metal ties or anchorage devices are embedded.

D. Should segregation of aggregates occur they should be remixed to conform to the grading requirements.

E. Frozen aggregates or aggregates containing frozen lumps shall be thawed before use.

F. Cement that has hardened or partially set shall be removed from the site and not used.

G. Washed aggregates and aggregates produced or manipulated by hydraulic methods shall be allowed to drain for at least 12 hours before use.

H. Contractor responsible to facilitate the special inspections.

1.7 ENVIRONMENTAL REQUIREMENTS:

A. Follow the requirements for cold weather masonry construction as specified in B.I.A. Technical Notes #1 and #1A and herein.

Masonry Mortar (2/4)

B. Heat mixing water when air temperature is below 40 degrees F and heat aggregates when air temperature is below 32 degrees F to assure mortar temperatures between 40 degrees and 120 degrees F until used.

C. Produce subsequent mortar batches within +/- 10 degrees F of first batch.

D. Do not heat water or sand above 120 degrees

E. Cold-Weather Construction: Comply with referenced standard for cold-weather construction and the following:

1. Remove mortar damaged by freezing conditions.

2. Install mortar only when the exterior temperature will remain a constant 45 degrees or above for a 72-hour period from the commencement of work.

PART 2 - PRODUCTS

2.1 MORTAR MIXES:

A. All mortar mixes shall comply with the requirements set forth in ASTM C270-89, "Standard of Specifications for MORTAR FOR UNIT MASONRY" and shall consist of mixes for respective locations designated in paragraph 1.02, B. of this Section.

B. Mix mortar materials to produce mortar cubes having the following compressive strengths when tested in accordance with Property Specification Paragraph 8 of reference standard.

1. Mortar Type "N": 750 psi at 28 days.

C. Mortar color to match existing, historic mortar.

2.2 MIXING PROCEDURES:

A. Measure materials by volume or equivalent weight.

B. Do not measure by shovel.

C. Mix ingredients in clean mechanical mixer for a minimum of 3 minutes, maximum 5, with the minimum amount of water to produce a workable consistency.

D. Mortars that have stiffened because of evaporation of water from the mortar shall be re-tempered by adding water as frequently as needed to restore the required

Masonry Mortar (3/4)

consistency. Mortars shall be used and placed in final position within 2-1/2 hours after initial mixing.

E. Masonry mortar shall be colored to match existing and as approved by the Architect. Color will be established using Flamingo colors of the Riverton Corp., in a factory controlled custom mix. Only premixed colored mortar materials will be acceptable; no liquid colorants permitted.

PART 3 - EXECUTION

3.1 GENERAL:

A. Apply mortar in accordance with requirements stated in Section 04200 - Unit Masonry.

B. Apply mortar when the exterior temperature remains a constant 45 degrees or above for a 72-hour period from the commencement of work

END OF SECTION

Masonry Mortar (4/4)

MANCINI

Appendix
Specifications - Unit Masonry

SECTION 04200
UNIT MASONRY

PART 1 - GENERAL

1.1 RELATED DOCUMENTS:

A. General Contract Provisions apply to Work of this Section.

1.2 WORK SUMMARY:

A. This Section includes the following:

1. Clay unit masonry in the form of brick.

1.3 SUBMITTALS:

A. Product data for each different masonry unit, accessory, and other manufactured product indicated.

B. Shop drawings for reinforcing detailing fabrication, bending, and placement of unit masonry reinforcing bars. Comply with ACI 315 "Details and Detailing of Concrete Reinforcing" showing bar schedules, stirrup spacing, diagrams of bent bars, and arrangement of masonry reinforcement.

C. Samples for verification purposes of the following:

1. Full-size units for each different exposed masonry unit required showing full range of exposed color, texture, and dimensions to be expected in completed construction.

a. Include size variation data verifying that actual range of sizes for brick falls within ASTM C 216 dimension tolerances for brick where modular dimensioning is indicated.

2. Accessories embedded in the masonry.

D. Material certificates for the following signed by manufacturer and Contractor certifying that each material complies with requirements.

1. Each different cement product required for mortar and grout including name of manufacturer, brand, type, and weight slips at time of delivery.

2. Each material and grade indicated for reinforcing bars.

Unit Masonry (1/14)

3. Each type and size of joint reinforcement.

4. Each type and size of anchors, ties, and metal accessories.

E. Material test reports from a qualified independent testing laboratory employed and paid by Contractor indicating and interpreting test results relative to compliance of the following proposed masonry materials with requirements indicated.

1. Mortar complying with property requirements of ASTM C270.

2. Grout mixes. Include description of type and proportions of grout ingredients.

3. Masonry units.

F. Cold-weather construction procedures evidencing compliance with requirements specified in referenced unit masonry standard.

G. Hot-weather construction procedures evidencing compliance with requirements specified in referenced unit masonry standard.

H. Qualification data for firms and persons specified in "Quality Assurance" Article to demonstrate their capabilities and experience. Include list of completed projects with project names, addresses, telephone numbers, names of Architects and Owner, and other information specified.

I. Results from tests and inspections performed by Owner's representatives will be reported promptly and in writing to Architect and Contractor.

1.4 QUALITY ASSURANCE:

A. Unit Masonry Standard: Comply with ACI 530.1/ASCE 6 "Specifications for Masonry Structures," except as otherwise indicated.

1. Revise ACI 530.1/ASCE 6 to exclude Sections 1.4 and 1.7; Parts 2.1.2, 3.1.2, and 4.1.2; and Articles 1.5.1.2, 1.5.1.3, 2.1.1.1, 2.1.1.2, and 2.3.3.9 and to modify Article 2.1.1.4 by deleting requirement for installing vent pipes and conduits built into masonry.

B. Inspecting Laboratory Qualifications: To qualify for employment in performing tests and inspection specified in this Section, an independent testing laboratory must demonstrate to Architect's satisfaction, based on evaluation of laboratory-submitted criteria conforming to ASTM C 1093, that it has the experience and capability to conduct satisfactorily the testing indicated without delaying the progress of work.

Unit Masonry (2/14)

C. Pre-construction Testing: Owner will employ and pay a qualified independent testing laboratory to perform the following pre-construction testing indicated as well as other inspecting and testing services required by referenced unit masonry standard or indicated herein for source and field quality control:

1. Clay unit masonry tests: For each different clay masonry unit indicated, units will be tested per ASTM C67.

2. Concrete Masonry Unit Tests: For each different concrete masonry unit indicated, units will be tested for strength, absorption, and moisture content per ASTM C 140.

3. Mortar properties will be tested per property specification of ASTM C270.

4. Grout compressive strength will be tested per ASTM C 1019.

D. Single-Source Responsibility for Masonry Units: Obtain exposed masonry units of uniform texture and color, or a uniform blend within the ranges accepted for these characteristics, from one manufacturer for each different product required for each continuous surface of visually related surfaces.

E. Single-Source Responsibility for Mortar Materials: Obtain mortar ingredients of uniform quality, including color for exposed masonry, from one manufacturer for each cementitious component and from one source and producer for each aggregate.

1.5 DELIVERY STORAGE AND HANDLING:

A. Deliver masonry materials to project in undamaged condition.

B. Store and handle masonry units off the ground, under cover, and in a dry location to prevent their deterioration or damage due to moisture, temperature changes, contaminants, corrosion, and other causes. If units become we, do not place until units are in an air-dried condition.

C. Store cementitious materials off the ground, under cover, and in dry locations.

D. Store aggregates where grading and other required characteristics can be maintained and contamination avoided.

E. Store masonry accessories including metal items to prevent corrosion and accumulation of dirt and oil.

Unit Masonry (2/14)

1.6 PROJECT CONDITIONS:

A. Protection of Masonry: During erection, cover tops of walls, projections, and sills with waterproof sheeting at end of each day's work. Cover partially completed masonry when construction is not in progress.

1. Extend cover a minimum of 24 inches down both sides and hold cover securely in place.

B. Do not apply uniform floor or roof loads for at least 12 hours and concentrated loads for at least 3 days after building masonry walls.

C. Stain Prevention: Prevent grout, mortar, and soil from staining the face of masonry to be left exposed. Remove immediately any grout, mortar, and soil that come in contact with such masonry.

1. Protect base of walls from rain-splashed mud and mortar splatter by means of coverings spread on ground and over wall surface.

2. Protect sills, ledges, and projections from mortar droppings.

3. Protect surfaces of window and door frames, as well as similar products with painted and integral finishes from mortar droppings.

D. Cold-Weather Construction: Comply with referenced unit masonry standard for cold-weather construction and the following:

1. Do not lay masonry units that are wet or frozen.

2. Remove masonry damaged by freezing conditions.

3. Lay masonry units only when the exterior temperature will remain a constant 45 degrees or above for a 72-hour period from the commencement of work.

E. Hot-Weather Construction: Comply with referenced unit masonry standard.

PART 2 - PRODUCTS

2.1 MATERIALS - GENERAL:

Unit Masonry (4/14)

MANCINI:

Appendix
Specifications - Unit Masonry

A. Comply with referenced unit masonry standard and other requirements specified in this Section applicable to each material indicated.

2.2 CLAY MASONRY UNITS:

A. General: Comply with the following requirements applicable to each form of brick required.

1. Provide special molded shapes where indicated and as follows:

a. For applications requiring brick of form, color, texture, and size on exposed surfaces that cannot be produced by sawing standard brick sizes.

b. For applications where stretcher units cannot accommodate special conditions including those at corners.

2. Provide units without cores or frogs and with all exposed surfaces finished for ends of headers and similar applications that expose brick surfaces that otherwise would be concealed from view.

B. Face Brick Standard: ASTM C 216 and as follows:

1. Grade and Unit Compressive Strength: Provide units of grade and minimum average net area compressive strength indicated below:

a. Grade SW.

b. 3000 psi

2. Type FBS.

3. Size: Provide bricks manufactured to the following actual dimensions within the tolerances specified in ASTM C 216:

a. Standard: Match Existing.

4. Shape units during manufacture as indicated below:

a. Molding.

5. Application: Use where brick is exposed, unless otherwise indicated.

6. Wherever shown to "match existing" provide face brick of matching color, texture, and size as existing adjacent brickwork.

7. Color and Texture: Match existing historic brick.

Unit Masonry (5/14)

8. Recommended Manufacturers:

a. Glen-Gery Corporation, Sommerville, NJ

b. The Belden Brick, Conton, OH

C. Building (Common) Brick: ASTM C 62, and as follows:

1. Grade and Unit Compressive Strength: Provide units of grade and minimum average net area compressive strength indicated below:

a. Grade MW or Grade SW.

b. 3000 psi.

2. Size: Provide bricks manufactured to the following actual dimensions within the tolerances specified in ASTM C 216:

a. Standard Modular: 3-5/8 inches thick by 2-1/4 inches high by 7-5/8 inches long.

3. Application: Use where brick is indicated for concealed locations.

2.3 GROUT MATERIALS:

A. Portland Cement: ASTM C 150, Type I or II.

B. Masonry Cement: ASTM C 91.

C. Hydrated Lime: ASTM C 207, Type S.

D. Aggregate for Grout: ASTM C 404.

E. Water: Clean and potable.

2.4 REINFORCING STEEL:

A. General: Provide reinforcing steel complying with requirements of referenced unit masonry standard and this article.

B. Steel Reinforcing Bars: Material and grade as follows:

1. Billet steel complying with ASTM A 615.

2. Grade 60.

Unit Masonry (6/14)

2.5 JOINT REINFORCEMENT:

A. General: Provide joint reinforcement complying with requirements of referenced unit masonry standard and this article, formed from the following:

1. Hot-dipped galvanized carbon steel wire, coating class as required by referenced unit masonry standard to application indicated.

B. Description: Welded-wire units prefabricated with deformed continuous side rods and plain cross rods into straight lengths of not less than 10 feet, with prefabricated corner and tee units, and complying with requirements indicated below:

1. Wire Diameter for Side Rods: 0.1483 inch (9 gauge).

2. Wire Diameter for Cross Rods: 0.1483 inch (9 gauge).

3. For multiwythe masonry provide type as follows:

a. Truss design with diagonal cross rods spaced not more than 16 inches o.c. and number of side rods as follows:

(1) Number of Side Rods for Multi-wythe Concrete Masonry: One side rod for each face shell of hollow masonry units more than 4 inches in nominal width plus one side rod for each style of masonry 4 inches or less in nominal width.

C. Available Manufacturers: Subject to compliance with requirements, manufacturers offering joint reinforcement that may be incorporated in the Work include, but are not limited to, the following:

1. AA Wire Products Co.

2. Dur-O-Wal, Inc.

3. Heckman Building Products, Inc.

4. Hohmann & Barnard, Inc.

2.6 TIES AND ANCHORS, GENERAL:

A. General: Provide ties and anchors specified in subsequent articles that comply with requirements for metal and size of referenced unit masonry standard and of this article.

Unit Masonry (7/14)

B. Galvanized Carbon Steel Wire: ASTM A 82, coating class as required by referenced unit masonry standard, for wire ties and anchors in interior walls, unless otherwise indicated.

1. Wire Diameter: 0.1875 inch.

C. Steel Plates and Bars: ASTM A 36, hot-dip galvanized to comply with ASTM A 123 or ASTM A 153, Class B3, as applicable to size and form indicated.

D. Available Manufacturers: Subject to compliance with requirements, manufacturers offering products that may be incorporated in the work include, but are not limited to, the following:

1. AA Wire Products Co.

2. Dur-O-Wal, Inc.

3. Heckman Building Products, Inc.

4. Hohmann & Barnard, Inc.

2.7 RIGID ANCHORS:

A. Provide straps of form and length indicated, fabricated from metal strips of following width and thickness:

1. 1-1/2 inches wide by 1/4 inch thick.

2.8 MISCELLANEOUS ANCHORS:

A. Unit Type Masonry Inserts in Concrete: Cast iron or malleable iron inserts of type and size indicated.

B. Dovetail Slots: Furnish dovetail slots, with filler strips, of slot size indicated, fabricated from 0.0336-inch (22-gauge) sheet metal.

C. Anchor Bolts: Steel bolts complying with A 307, Grade A; with ASTM A 563 hex nuts and, where indicated, flat washers; hot-dip galvanized to comply with ASTM A 153, Class C; of diameter and length indicated and in the following configurations:

D. Anchors for Tying New Brick Masonry to Existing Masonry: 1-1/2" x 14 gauge hot dipped galvanized corrugated box anchor with 1/4" x 1" galvanized metal hit anchor as manufactured by Hilti.

Unit Masonry (8/14)

Appendix
Specifications - Unit Masonry

2.9 MASONRY CLEANERS:

A. Job-Mixed Detergent Solution: Solution of trisodium phosphate (1/2-cup dry measure) and laundry detergent (1/2-cup dry measure) dissolved in one gallon of water.

B. Proprietary Acidic Cleaner: Manufacturer's standard-strength, general-purpose cleaner designed for removing mortar/grout stains, efflorescence, and other new construction stains from new masonry surfaces of type indicated below without discoloring or damaging masonry surfaces; expressly approved for intended use by manufacturer of masonry units being cleaned.

1. For masonry not subject to metallic oxidation stains, use formulation consisting of a concentrated blend of surface-acting acids, chelating, and wetting agents.

2. Available Products: Subject to compliance with requirements, a product that may be used to clean unit masonry surfaces includes, but is not limited to, the following:

a. "Sure Klean No. 600 Detergent," ProSoCo, Inc.

2.10 MORTAR AND GROUT MIXES:

A. General: Do not add admixtures including air-entraining agents, accelerators, retarders, water repellent agents, antifreeze compounds, or other admixtures, unless otherwise indicated.

1. Do not use calcium chloride in mortar or grout.

B. Mortar for Unit Masonry: Comply with ASTM C 270, Proportion Specification, for types of mortar indicated below:

1. Limit cementitious materials in mortar to portland cement-lime.

2. For masonry below grade and in contact with earth, and where indicted, us type indicated below:

a. Type S.

3. For reinforced masonry and above grade load bearing walls and where indicated, use type indicated below:

Unit Masonry (9/14)

a. Type S.

C. Grout for Unit Masonry: Comply with ASTM C 476 and referenced unit masonry standard.

2.11 SOURCE QUALITY CONTROL:

A. Brick Tests: For each type and grade of brick indicated, units will be tested by qualified independent testing laboratory per ASTM C 67 except 5 bricks will be selected at random for each 100,000 units or fraction thereof installed.

B. Concrete Masonry Unit Tests: For each type, class, and grade of concrete masonry unit indicated, units will be tested by qualified independent testing laboratory for strength, absorption, and moisture content per ASTM C 140.

PART 3 - EXECUTION

3.1 EXAMINATION:

A. Examine conditions, with Installer present, for compliance with requirements for installation tolerances and other specific conditions, and other conditions affecting performance of unit masonry.

1. For the record, prepare written report, endorsed by Installer, listing conditions detrimental to performance of unit masonry.

B. Do not proceed until unsatisfactory conditions have been corrected.

3.2 INSTALLATION, GENERAL:

A. Comply with referenced unit masonry standard and other requirements indicated applicable to each type of installation included in Project.

B. Thickness: Build composite walls and other masonry construction the full thickness shown.

C. Cut masonry units with motor-driven saws to provide clean, sharp, unchipped edges. Cut units as required to provide continuous pattern and to fit adjoining construction. Use full-size units without cutting where possible.

D. Matching Existing Masonry: Match coursing, bonding, color, and texture of new masonry with existing masonry.

3.3 CONSTRUCTION TOLERANCES:

Unit Masonry (10/14)

A. Comply with construction tolerances of referenced unit masonry standard.

3.4 LAYING MASONRY WALLS:

A. Lay out walls in advance for accurate spacing of surface bond patterns with uniform joint widths and for accurate locating of openings, movement-type joints, returns, and offsets. Avoid the use of less-than-half-size units at corners, jambs, and where possible at other locations.

B. Lay up walls to comply with specified construction tolerances, with courses accurately spaced and coordinated with other construction.

C. Bond Pattern for Exposed Masonry: Lay exposed masonry in the following bond pattern; do not use units with less than nominal 4-inch horizontal face dimensions at corners or jambs.

1. One-half running bond with vertical joint in each course centered on units in courses above and below.

D. Lay concealed masonry will all units in a wythe in running bond or bonded by lapping not less than 2 inches. Bond and interlock each course of each wythe at corners. Do not use units with less than nominal 4-inch horizontal face

E. Stopping and Resuming Work: In each course, rack back 1/2-unit length for one-half running bond or 1/3-unit length for one-third running bond; do not tooth. Clean exposed surfaces of set masonry, wet clay masonry units lightly (if required), and remove loose masonry units and mortar prior to laying fresh masonry.

F. Built-In Work: As construction progresses, build-in items specified under this and other Sections of the Specifications. Fill in solidly with masonry around built-in items.

1. Fill space between hollow metal frames and masonry solidly with mortar, unless otherwise indicated.

2. Where built-in items are to be embedded in cores of hollow masonry units, place a layer of metal lath in the joint below and rod mortar or grout into core.

3. Fill cores in hollow concrete masonry units with grout 3 courses (24 inches) under bearing plates, beams, lintels, posts, and similar items, unless otherwise indicated.

3.5 MORTAR BEDDING AND JOINTING:

Unit Masonry (11/14)

A. Cut joints flush for masonry walls to be concealed or to be covered by other materials, unless otherwise indicated.

3.6 STRUCTURAL BONDING OF MULTI-WYTHE MASONRY:

A. Use continuous horizontal joint reinforcement installed in horizontal mortar joints for bond tie between wythes.

B. Corners: Provide interlocking masonry unit bond in each course at corners, unless otherwise shown.

1. Provide continuity with horizontal joint reinforcement at corners using prefabricated "L" units, in addition to masonry bonding.

3.7 ANCHORING MASONRY TO STRUCTURAL MEMBERS:

A. Anchor masonry to structural members where masonry abuts or faces structural members to comply with the following:

1. Provide an open space not less than 1 inch in width between masonry and structural member, unless otherwise indicated. Keep open space free of mortar or other rigid materials.

2. Anchor masonry to structural members with flexible anchors embedded in masonry joints and attached to structure.

3. Space anchors as indicated, but not more than 24 inches o.c. vertically and 36 inches o.c. horizontally.

3.8 INSTALLATION OF REINFORCED UNIT MASONRY:

A. General: Install reinforced unit masonry to comply with requirements of referenced unit masonry standard.

B. Temporary Formwork: Construct formwork and shores to support reinforced masonry elements during construction.

1. Construct formwork to conform to shape, line, and dimensions shown. Make sufficiently tight to prevent leakage of mortar and grout. Brace, tie, and support forms to maintain position and shape during construction and curing of reinforced masonry.

C. Do not place grout until entire height of masonry to be grouted has attained sufficient strength to resist grout pressure.

Unit Masonry (12/14)

MANCINI:

Appendix
Specifications - Unit Masonry

D. Do not remove forms and shores until reinforced masonry members have hardened sufficiently to carry their own weight and other temporary loads that may be placed on them during construction.

3.9 FIELD QUALITY CONTROL:

A. Testing Frequency: Tests and evaluations listed in this article will be performed during construction for each 5000 sq. ft. of wall area or portion thereof.

1. Mortar properties will be tested per property specification of ASTM C 270.

2. Mortar composition and properties will be evaluated per ASTM C 780.

3. Grout compressive strength will be sampled and tested per ASTM C 1019.

B. Evaluation of Quality Control Tests: In absence of other indications of noncompliance with requirements, masonry will be considered satisfactory if results from construction quality control tests comply with minimum requirements indicated.

3.10 REPAIR OF EXISTING MASONRY:

A. Mortar joints in existing interior requiring re-pointing as shown on Drawings or as required to restore walls to structural stability.

B. Existing exterior brick masonry requiring re-pointing. Refer to Section 04500.

3.11 REPAIRING, POINTING, AND CLEANING:

A. Remove and replace masonry units that are lose, chipped, broken, stained, or otherwise damaged or if units do not match adjoining units. Install new units to match adjoining units and in fresh mortar or grout, pointed to eliminate evidence of replacement.

B. Pointing: During the tooling of joints, enlarge any voids or holes, except weep holes, and completely fill with mortar. Point-up all joints including corners, openings, and adjacent construction to provide a neat, uniform appearance, prepared for application of sealants.

C. Final Cleaning: After mortar is thoroughly set and cured, clean exposed masonry as follows:

1. Remove large mortar particles by hand with wooden paddles and nonmetallic scrape hoes or chisels.

Unit Masonry (13/14)

GACE consulting engineers dpc

2. Test cleaning methods on sample wall panel; leave 1/2 panel uncleaned for comparison purposes. Obtain Architect's approval of sample cleaning before proceeding with cleaning of masonry.

3. Protect adjacent pre-cast and non-masonry surfaces from contact with cleaner by covering then with liquid strippable masking agent, polyethylene firm, or waterproof masking tape.

4. Wet wall surfaces with water prior to application of cleaners; remove cleaners promptly by rinsing thoroughly with clear water.

5. Clean brick by means of bucket and brush hand-cleaning method described in BIA "Technical Note No. 20 Revised" using the following masonry cleaner:

a. Proprietary acidic cleaner; apply in compliance with directions of acidic cleaner manufacturer.

D. Protection: Provide final protection and maintain conditions, in a manner acceptable to Installer, that ensure unit masonry is without damage and deterioration at time of Substantial Completion.

END OF SECTION

Unit Masonry (14/14)

MANCINI

Appendix
Specifications - Masonry Cleaning

SECTION 04500
MASONRY CLEANING

PART 1 - GENERAL

1.1 GENERAL:

A. Drawings and general provisions of the Contract, including General and Special Conditions, apply to the work of this Section.

1.2 SCOPE OF WORK:

The work shall include furnishing all labor and materials, equipment, and services necessary to complete all work related to masonry cleaning, as shown on the drawings, herein specified, and as required by conditions or authorities for proper completion of the work.

A. Masonry Cleaning includes, but not by way of limitation:
Removal of all foreign substances from all exposed masonry surfaces on all facades.

B. Masonry Cleaning shall be done at the beginning of the work before the repair, removal or replacement of any of the face brick. After the masonry has been cleaned as specified herein, it shall be protected from dirt and staining for the remainder of the project. At the end of the project, all of the masonry affected by the work of this contract shall be as if just cleaned.

C. Goal of Masonry Cleaning: The goal of the work of this Section is to remove all stains, atmospheric dirt, and other residues from all exposed masonry surfaces of the building and give all masonry a clean, uniform appearance. Any work that does not achieve this goal will be considered unsuccessful and will have to be re-cleaned until this goal is achieved, to the satisfaction of the Engineer at no additional cost to the Owner.

1.3 QUALITY ASSURANCE:

A. Restoration Specialist: Work must be performed by a firm with not less than five (5) years successful experience in cleaning masonry materials similar to that on this project. Only workmen skilled in the cleaning process and having a minimum of three (3) years experience cleaning masonry similar to that of this project shall be employed for this work.

Masonry Cleaning (1/6)

B. Manufacturer's Representative: A representative on the full-time staff of the manufacturer of the cleaning products used for the work of this Section shall be present for the work on the test areas and shall be available as required throughout the work of this Section.

1.4 SUBMITTALS:

A. All Submittals: Comply with the requirements of Section 5.

B. Product Data: Submit manufacturer's specifications and other data for each manufactured product, including certification that each product complies with specified requirements. Include instructions for handling, storage, and protection of each product.

C. Methods of Application: Submit a written description of the entire methods and procedures proposed for cleaning and stain removal including but not limited to: method of application, dilution of application, temperature of application, length of time of surface contact, methods of rinsing surface (temperature, pressure, and duration), repetition of procedure, etc.

D. Methods of Protection: submit a written description of proposed materials and methods of protection for preventing damage to any non-masonry surfaces on the job site including but not limited to glass and wood, for approval by the Engineer. These methods and materials can include but are not limited to spray-on, peel-off type liquid materials and masking tape. Outline methods to keep water from reaching the interior of the buildings and to provide scaffolds and other methods of protection if so directed by the Engineer.

E. Test Areas: After Engineer's approval of product data and methods, test clean a designated 8 ft. by 8 ft. sample area for each type of cleaning as directed by the Engineer, showing materials and methods to be used for cleaning surface. Sample panels shall be protected and remain as minimum standards for the cleaning operations.

(1) Clean test areas using the materials and methods proposed. The gentlest methods shall be used to produce acceptable results.

(2) Representative of the manufacturer of the cleaning products shall be present during cleaning of test areas.

(3) Approval in writing of the quality and condition of the cleaned test areas and the method used to clean them must be obtained from the Engineer before the work of masonry cleaning is begun.

Masonry Cleaning (2/6)

(4) Cover test areas as approved by the Engineer with clear plastic covers, which shall be removed upon completion of all cleaning operations. Test areas will be considered an integral part of the work upon completion of the cleaning operation.

1.5 DELIVERY, STORAGE & HANDLING:

A. Deliver all materials in manufacturer's original sealed and labeled containers.

B. Store all materials according to manufacturer's recommendations and free from extremes of temperature.

1.6 PROJECT CONDITIONS:

A. Environmental Requirements: None of the work outlined in this section shall be conducted at surface and air temperature below 50 degrees F or above 90 degrees Work shall not be conducted when there is a change of the surface temperature falling below 40 degrees F in the 24 hours following application.

B. Protect, using extreme care, surrounding materials and buildings. Any damage to other materials is unacceptable and will be repaired to the satisfaction of the Engineer at no cost to the Owner.

C. Provide protection from water damage to building or structure.

D. Trees and plants around the building shall be protected from contamination.

E. Test all drains and other water removal systems to assure that drains and systems are functioning properly prior to performing any cleaning operations. Notify Engineer immediately of any and all drains or systems that are found to be stopped or blocked. Contractor shall repair drains if so directed by Engineer. Do not begin work of this Section until the drains are in working order.

F. Provide a method to prevent solids such as masonry residue from entering the drains or drain lines. Contractor shall be responsible for cleaning out drains and drain lines that become blocked or filled by sand or other solids because of work performed under this Contract.

Masonry Cleaning (3/6)

PART 2 - PRODUCTS

2.1 GENERAL:

A. Materials to be used for cleaning shall be part of a system of products (such as detergents, cleaning compounds, liquids, soap powders, etc.) produced by one manufacturer to insure compatibility. All materials with appropriate technical information are to be submitted to the Engineer for final approval. Cleaning materials are not to be restricted to those listed below.
Available product system: Subject to compliance with the requirements of this Section, the cleaning products used shall be products as manufactured by ProSoCo, Incorporated, KRC Research Corporation, Diedrich Technologies Inc. or products of an equally comprehensive cleaning system approved by the Engineer.

ProSoCo., Inc., Kansas City, Kansas.

KRC Research Corporation, 315 North Washington Avenue, Moorestown, NJ.

Diedrich Technologies Inc., 7373 South Street, Oak Creek, WI 553154

Dumond Chemicals, Inc., 104 Interchange Plaza, Suite 202, Monroe Township, NJ 08831

B. All materials shall have been manufactured for the purpose for which they are proposed for use.

C. Injurious substances or any ingredients that independently or in combination with other compounds, fluids or solutions will damage the masonry shall not be used. Methods or products causing abrasion damage to the surface finish of the masonry are prohibited.

D. No sand, silica flour, or any other grit shall be used either singularly or in combination with water or any other liquid.

E. All chemical materials, compounds, liquids, etc. shall be safe for use and shall not violate local, state, or federal environmental or safety regulations.

F. Materials for use in removing dirt, grease, oil, graffiti, paint, stains, efflorescence, plant growth, mineral deposits, bird droppings, bituminous coating or other discolorations such as copper or corrosion stains, shall be commercially available, and subject to environmental limitations.
Precise composition and strength of the chemicals to be used shall remain subject to the Engineer's approval.

Masonry Cleaning (4/6)

Appendix
Specifications - Masonry Cleaning

2.2 CLEANING MATERIALS:

A. Detergent: Non-acidic detergent such as:
   a. Ion - 417
   b. Aremi - 2002 marble cleaner
   c. Dumond - Ultimate Stone & Masonry Cleaner
   d. Dumond - Architectural Cleaner

B. Chemical Paint Removers, such as Prosoco Enviro Klean Safety Peel 1, or approved equal.

C. Other chemical cleaners as required for specific soiling and stains.

D. Poultices: a blend of clays and detergents. Provide recommended product from ProsoCo, Inc., or an approved equal.

E. Water for cleaning shall be clean, pure, and free from any injurious amounts of oil, acids, alkalines, organic materials, and other deleterious substances.
Filter all water used for work of this Section.
Provide a pump to achieve recommended pressures for the water used for the work of this Section.

F. Brushes for washing masonry: soft fibered "Tampico" masonry washing brushes or approved equal.

PART 3 – EXECUTION

3.1 REMOVAL METHODS:

A. General Cleaning:

(1) The maximum water pressure shall be 500 psi for masonry and 300 psi for cast iron.

(2) The cleaning method shall be the one recommended by the manufacturer of the cleaning products used and approved by the Engineer. All manufacturer's recommendations shall be followed.
The method submitted to the Engineer for approval shall describe the product, dilution, method of application, duration of time on surface, and methods of removal (including the pressure and flow rate of the rinse).

(3) [OMITTED]
(4) Use of wire brushes, grinders, or any other non-approved abrasive methods shall not be permitted.

Masonry Cleaning (5/6)

B. Special Cleaning:

(1) Method to be used for cleaning dirt, stains and coatings not removed by the above general cleaning procedures shall be recommended by the Contractor and approved by the Engineer. Methods may include, but shall not be limited to, prewash - afterwash systems, the use of nonferrous bristle brushes and application of poultices.

3.2 CORRECTIVE MEASURES:

a. Contractor shall repeat the processes of the work of this Section until the goal of a clean, uniform, harmonious masonry surface achieved to the complete satisfaction of the Engineer.

b. Any and all damage caused to the building or structures by the work of this Section shall be repaired to the satisfaction of the Engineer at no cost to the Owner.

END OF SECTION

Masonry Cleaning (6/6)

MANCINI

Appendix
Specifications - Sealants & Caulking

SECTION 07900
SEALANTS AND CAULKING

PART 1- GENERAL

1.1 GENERAL PROVISIONS:

A. Perform work of this section in accordance with the owner's general conditions, special requirements, drawings, and all other requirements of the contract documents.

1.2 QUALITY ASSURANCE:

A. Materials Manufacturer: Company specializing in manufacturing the products specified in this section with a minimum of ten years documented experience.

B. Applicator: Company specializing in the application of the products specified in this section with a minimum of five years documented experience and qualified by the materials manufacturer.

C. The contractor will meet with the manufacturer of the sealant at the job site prior to the use of the products specified.

1.3 SCOPE OF WORK:

A. Furnish all labor, materials, tools, and equipment required to perform the work in this section as shown on the drawings and as specified herein. In general, the work shall include, but not necessarily be limited to, the following:

1. Remove old caulking where existing, prepare joints, and caulk all: vertical expansion joints and cracks, all under the base bid using Type 1 sealant.
2. Caulk all horizontal expansion and control joints using Type 2 sealant.
3. Caulk in contact with metals and glazing at wall opening using Type 3 sealant.
4. Use the appropriate primer when the manufacturer, and/or field adhesion test requires to do so.

Sealants & Caulking (1/5)

B. Related work specified elsewhere:

1. The contractor will be required to coordinate the work of other sections with the work of this section and be responsible for the timely and expeditious performance of same.

1.4 SUBMITTALS:

A. When alternates to the specified product are submitted for acceptance, Include laboratory tests or data that validate product compliance using the same testing methods as the specified product.

B. Submit manufacturers technical data sheets and material safety data sheets for each product

C. Submit products from a single source manufacturer, including related work specified elsewhere, and noted in section 07900 1.3 B, in order to provide the owner a complete system of concrete repair and protection.

1.5 DELIVERY, STORAGE, AND HANDLING:

A. Deliver the specified product in original, unopened containers with the manufacturer's name, labels, product identification, and batch numbers.

B. Store and condition the specified product as recommended by the manufacturer.

PART 2 - PRODUCTS

2.1 The following products are components of a complete concrete repair and protection system from a single source manufacturer. The following is meant to set the quality standard required for this project.

A. Acceptable manufacturers: Dow Corning Corporation, Midland, Michigan Sika Corporation, 201 Polito Avenue, Lyndhurst, NJ, 07071; contact person: Joe Vullo (516) 968-6337.

2.2 MATERIALS:

Sealants & Caulking (2/5)

A. Materials to be used will be one of the following, as manufactured by Sika Corporation, Lyndhurst, N.J. and by Dow Corning Corporation, Midland, MI, and determined by the application:

1. **Type -1**: sealant shall be one part, neutral cure, low to no bleed silicone sealant that cures to durable, flexible building sealant Sikasil WS-290 to follow the following physical properties:
   a. Movement capabilities of (ASTM C-719) +100% / - 50%.
   b. Tensile Properties tested under (ASTM D-412), 21 days
      Tensile stress (ASTM D-412): 165 p.s.i.
      Elongation at break (ASTM D-419): 700%
      Modulus of elasticity (ASTM D419): 25% - 20 psi; 50% - 35 psi; 100% - 50 psi
   c. Shore A Hardness tested under (ASTM D-2240): 9 days
2. **Type – 2:** sealant shall be one part, neutral cure, low to no bleed silicone sealant Sikasil WS-295 to follow the following physical properties:
   a. Movement capabilities of (ASTM C-719) +/- 50%
   b. Tensile properties tested under (ASTM D-412): 21 days
      Tensile strength at break (ASTM D-419): 200 psi
      Tensile elongation (ASTM D-419): 800%, 100% modulus: 55 psi
   c. Shore A Hardness tested under (ASTM D-2240): 20 days
3. **Type – 3:** sealant shall be a 1-component, silicone base sealant, Dow Corning 795 with the following physical properties:
   a. Tensile Strength tested under (ASTM D-412): 170psi
      Tear Strength tested under (ASTM D-624): 27psi
      Hardness (Shore A) tested under (ASTM D-624): 30(min)
   b. Peel Strength tested under (MIL-s-8802D): 32lb/in.

B. Backer Rod: Sealant backer shall be closed cell, expanded polyethylene foam which shall not form a bond with the sealant. The backer rod shall be at least 30% wider than the width of the joint.

Sealants & Caulking (3/5)

C. Bond Breaker Tape: Bond breaker tape shall be self-adhesive, polyethylene tape, compatible with the specified sealant.

PART 3 - EXECUTION

3.1 SURFACE PREPARATION:

A. The joint and adjacent substrate must be clean, sound, dry and free of frost. Remove all traces of the old sealant, dust, grease, curing compounds, waxes, impregnations, foreign particles, efflorescence, and other bond inhibiting contaminants from the surface.

B. Prime the prepared substrate if field-testing indicates a need.

C. Install closed cell backer rod at the appropriate depth to allow the sealant to be placed at the proper width to depth ratio recommended by the sealant manufacturer. For shallow joints use the appropriate size bond breaker tape instead of backer rod.

3.2 INSTALLATION:

A. Install the appropriate sealant into the joint with the proper caulking gun by placing the nozzle of the gun into the bottom of the joint and filling. Keep the tip of the nozzle in the sealant, continue on with a steady flow of sealant proceeding the nozzle to avoid air entrapment. Avoid overlapping the sealant.

B. Tool as required to properly fill the joint.

C. All products mentioned in this section must be applied in strict accordance with the manufacturer's instructions. Carefully observe mixing, application, limitations and cautions as stated in the manufacturer's technical data sheet.

3.3 FIELD QUALITY CONTROL:

A. All work under this section shall be subject to detailed inspection. Any sealants or caulking found improperly installed or tooled, or any work otherwise defective or not in accordance with the specifications and details shall be taken out and replaced to the complete satisfaction of the Engineer or owner.

Sealants & Caulking (4/5)

MANCINI

Appendix
Specifications - Sealants & Caulking

3.4 CLEANING AND PROTECTION:

A. The applicator shall promptly remove all temporary coverings and protections of adjacent work areas and will clean these areas of all foreign materials resulting from their work.

END OF SECTION

Appendix

Cut Sheet - Security Camera

Datasheet

AXIS COMMUNICATIONS

AXIS P3367-VE Network Camera

5-megapixel, light-sensitive with remote focus and zoom

AXIS P3367-VE is a fixed dome network camera that offers superb video performance in HDTV 1080p/5 MP resolution. It complies with the SMPTE 274M standard and can cover a large area with exceptional detail and light sensitivity. Wide dynamic range and day/night functionality provides high image quality even in low-light conditions. With multi-view streaming, the full view and up to 8 individually cropped out view areas can be streamed simultaneously. AXIS P3367-VE has support for digital pan/tilt/zoom, two-way audio, audio detection and input/output ports for external devices. With its weather-proof and vandal-resistant casing, it is perfectly adapted for harsh environments.

> HDTV 1080p/5 MP
> P-Iris control
> Remote zoom and focus
> I/O ports and two-way audio
> Outdoor-ready and IK10 vandal-resistance

ONVIF | G S

HDTV NETWORK VIDEO

Security Camera Cutsheet (1/2)

AXIS P3367-VE Network Camera

Camera	
Image sensor	Progressive scan RGB CMOS 1/3.2"
Lens	3–9 mm, F1.2 Horizontal field of view: 84°–30° Vertical field of view: 63°–22° Varifocal, Remote focus and zoom, P-Iris control, IR corrected
Day and night	Automatically removable infrared-cut filter
Minimum illumination	Color: 0.2 lux, F1.2, B/W: 0.04 lux, F1.2
Shutter speed	1/28000 s to 2 s
Camera angle adjustment	Pan 360°, Tilt 160°, Rotation 340°
Video	
Video compression	H.264 Baseline and Main Profile (MPEG-4 Part 10/AVC) Motion JPEG
Resolution	2592x1944 (5 MP) to 160x90
Frame rate	2 MP 4:3 (1600x1200) and HDTV 1080p (1920x1080) capture modes: 30 fps in all resolutions, 3 MP capture mode: 20 fps in all resolutions, 5 MP capture mode: 12 fps in all resolutions
Video streaming	Multiple, individually configurable streams in H.264 and Motion JPEG Controllable frame rate and bandwidth VBR/MBR H.264
Multi-view streaming	Up to 8 individually cropped out view areas When streaming 4 view areas and 1 overview in VGA resolution, the frame rate is 12 fps per stream (5 MP capture mode) or 20 fps per stream (3 MP capture mode)
Pan/Tilt/Zoom	Digital PTZ Preset positions, guard tour
Image settings	Compression, color, brightness, sharpness, contrast, white balance, exposure control, exposure zones, fine tuning of behavior at low light, text and image overlay, mirroring of images, privacy mask Rotation 0°, 90°, 180°, 270°, including Corridor Format Wide Dynamic Range - dynamic contrast
Audio	
Audio streaming	Two-way audio
Audio encoding	AAC LC 8/16 kHz, G.711 PCM 8 kHz, G.726 ADPCM 8 kHz Configurable bit rate
Audio input/output	
Network	
Security	Password protection, IP address filtering, HTTPS[a] encryption, IEEE 802.1X[a] network access control, digest authentication, user access log
Supported protocols	IPv4, IPv6 USGv6, HTTP, HTTPS[a], SSL/TLS[a], QoS Layer 3 DiffServ, FTP, CIFS/SMB, SMTP, Bonjour, UPnP™, SNMPv1/v2c/v3 (MIB-II), DNS, DynDNS, SFTP, NTP, RTSP, RTP, TCP, UDP, IGMPv1/v2/v3, RTCP, ICMP, DHCP, ARP, SOCKS, SSH
System integration	
Application Programming Interface	Open API for software integration, including VAPIX® and AXIS Camera Application Platform, specifications at *axis.com* One-click cloud connection ONVIF® Profile S and ONVIF® Profile G, specification at *www.onvif.org*
Analytics	**Included** AXIS Video Motion Detection, active tampering alarm, audio detection **Supported** AXIS Cross Line Detection, AXIS Perimeter Defender AXIS Digital Autotracking Support for AXIS Camera Application Platform enabling installation of third-party applications, see *axis.com/acap*
Event triggers	Analytics, edge storage events, external input
Event actions	File upload: FTP, FTPS, HTTP, HTTPS, network share and email Notification: email, HTTP, HTTPS and TCP Video recording to edge storage Pre- and post-alarm video buffering External output activation, audio recording to edge storage, play audio clip Preset positions, guard tour
Data streaming	Event data
Built-in installation aids	Remote zoom, remote focus, pixel counter
General	
Casing	Polycarbonate transparent dome, auminum inner camera module with encapsulated electronics IP66- and NEMA 4X-rated, IK10 impact-resistant casing with aluminum base and dehumidifying membrane Color: White NCS S 1002-B. For repainting instructions and impact on warranty, contact your Axis partner.
Sustainability	PVC free
Mounting	Mounting bracket with junction box holes (double-gang, single-gang, 4" octagon and 4" square) ¼"-20 UNC tripod screw thread
Memory	512 MB RAM, 128 MB Flash
Power	Power over Ethernet IEEE 802.3af/802.3at Type 1 Class 3 Max 12.1 W
Connectors	RJ45 10BASE-T/100BASE-TX PoE Terminal block for 1 alarm input and 1 output, 3.5 mm mic/line in, 3.5 mm line out
Storage	Support for SD/SDHC/SDXC card Support for SD card encryption Support for recording to network-attached storage (NAS) For SD card and NAS recommendations see *www.axis.com*
Operating conditions	-40 °C to 55 °C (-40 °F to 131 °F) Humidity 10-100% RH (condensing)
Storage conditions	-40 °C to 65 °C (-40 °F to 149 °F)
Approvals	**EMC** EN 55022 Class B, EN 61000-6-1, EN 61000-6-2, EN 55024, FCC Part 15 Subpart B Class B, ICES-003 Class B, VCCI Class B, RCM AS/NZS CISPR 22 Class B, KCC KN22 Class B, KN24, EN 50581, EN 50121-4, IEC 62236-4 **Safety** IEC/EN/UL 60950-22, IS 13252 **Environment** IEC 60068-2-1, IEC 60068-2-2, IEC 60068-2-14, IEC 60068-2-27, IEC 60068-2-64, IEC 60068-2-78, IEC/EN 60529 IP66, IEC 62262 IK10, NEMA 250 Type 4X **Network** NIST SP500-267
Weight	1.7 kg (3.7 lb), with weathershield
Dimensions	Ø178 x 117 mm (Ø7 x 4 5/8 in)
Included accessories	Installation Guide, Windows® decoder 1-user license, Resistorx® L-key, drill hole template Connector kit, mounting bracket, smoked dome, weather shield, 5 m (16 ft) network cable with pre-mounted gasket
Video management software	AXIS Companion, AXIS Camera Station, Video management software from Axis' Application Development Partners available on *axis.com/vms*
Languages	English, German, French, Spanish, Italian, Russian, Simplified Chinese, Japanese, Korean, Portuguese, Traditional Chinese
Warranty	5-year warranty, see *axis.com/warranty*

a. *This product includes software developed by the OpenSSL Project for use in the OpenSSL Toolkit (http://www.openssl.org/), and cryptographic software written by Eric Young (eay@cryptsoft.com).*

Environmental responsibility:

axis.com/environmental-responsibility

©2014 - 2021 Axis Communications AB. AXIS COMMUNICATIONS, AXIS, ARTPEC and VAPIX are registered trademarks of Axis AB in various jurisdictions. All other trademarks are the property of their respective owners. We reserve the right to introduce modifications without notice.

AXIS COMMUNICATIONS

Security Camera Cutsheet (2/2)

MANCINI

Appendix

Flood Barrier Cutsheet, Specs, and Sample Shop Drawings

PRESRAY Critical Containment Solutions www.Presray.com — FastLogs™

Stackable Flood Barrier

DESIGNED FOR
- Large Openings, garage doors, loading docks, openings requiring rapid, easy to install protection where low leakage is acceptable.

PROTECTION TO
- Custom designed to match any siz need.

SEAL TYPE
- Neoprene outer envelop
- Combination compression/lip seal around perimeter

SEAL AREA
- 3 sides - floor and both sides

UNIQUE FEATURES
- Easy to install, quick to deploy modular flood barriers.
- Ingenious, patented interlocking design allows for rapid deployment by one person with no tools.
- All components are made from heavy-duty, rust-free materials for optimal performance in wet coastal areas.

INSTALLATION
- Available for vew or existing construction
- The surface that the logs sit on should be smooth and level
- At first sign of flood, simply stack logs one on the of the other until desired height is reached and hand-tighten the clamp on the brackets

PRESRAY P.O. BOX 200, 32 NELSON HILL ROAD, WASSAIC, NY 12592
P: 845.373.9300 • F: 845.855.8034 • E:CONTACT@PRESRAY.COM

Cutsheet (1/3)

PRESRAY Critical Containment Solutions www.Presray.com — FastLogs™ Design

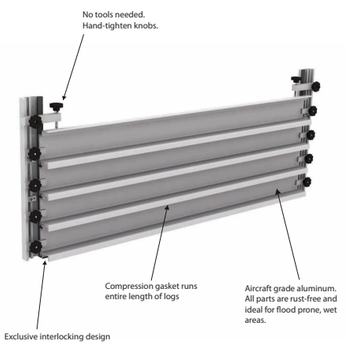

PRESRAY P.O. BOX 200, 32 NELSON HILL ROAD, WASSAIC, NY 12592
P: 845.373.9300 • F: 845.855.8034 • E:CONTACT@PRESRAY.COM

Cutsheet (2/3)

PRESRAY Critical Containment Solutions www.Presray.com — FastLogs™ Installation Detail

Apply caulking to the back of the jamb brackets and mount them on the face of the opening using the drill bit and hardware supplied.

High-quality finished shrouds are provided to protect and conceal the jamb brackets when not in use. They can be painted to match the color scheme of the building so they will not detract from your building's aesthetics.

Ensure that the floor and wall surfaces are level and smooth.

As water pushes against the "wet" side of FastLogs, the pressure actually tightens the logs by transferring horizontal water pressure into downward pressure on heavy-duty compression seals on the bottom of each "log". This exclusive design helps to prevent leakage between the logs.

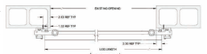

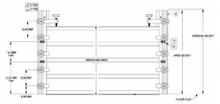

Exclusive interlocking design, providing heavy-duty, industrial-quality protection.

Logs are in 6" increments; jamb and shroud heights will vary depending on log height. Maximum height varies with width of openings.

PRESRAY P.O. BOX 200, 32 NELSON HILL ROAD, WASSAIC, NY 12592
P: 845.373.9300 • F: 845.855.8034 • E:CONTACT@PRESRAY.COM

Cutsheet (3/3)

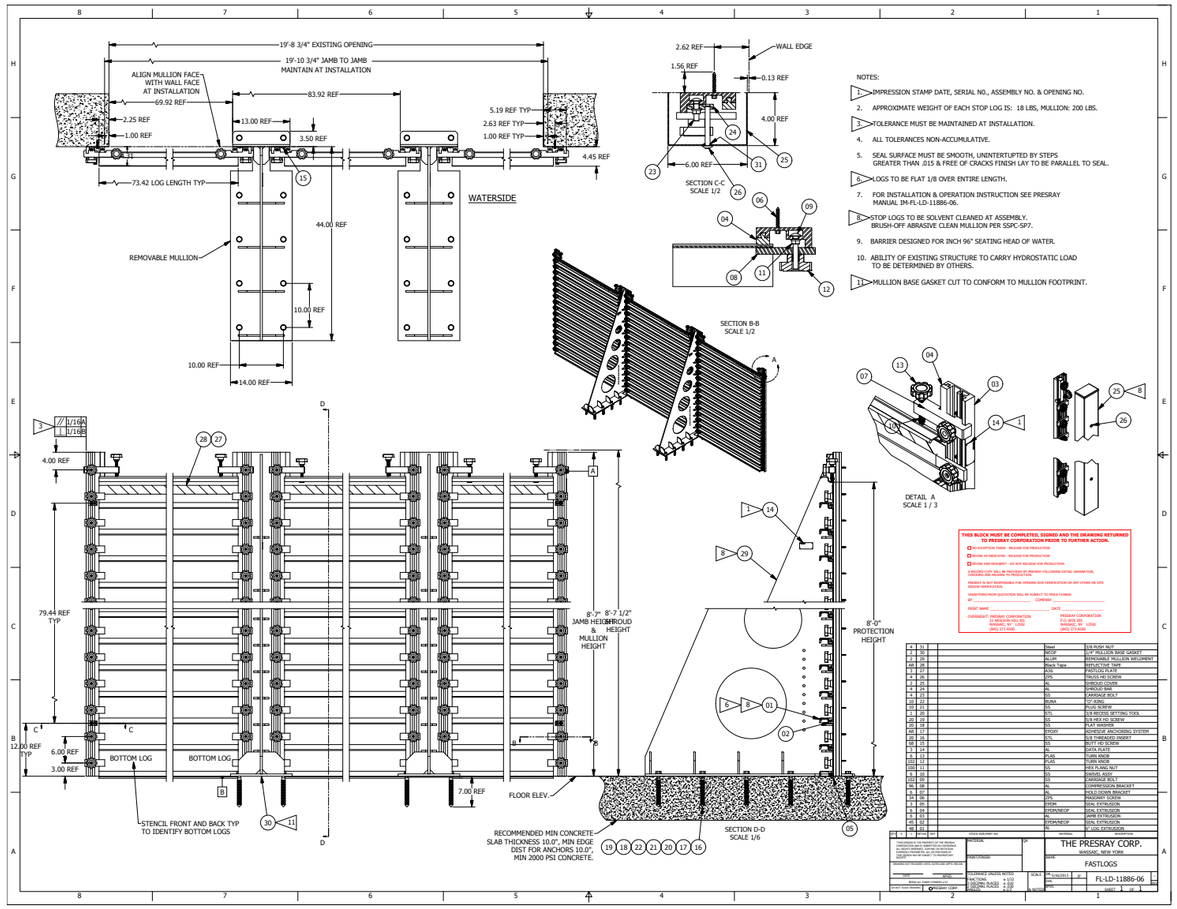

Sample Shop Drawings*

* The proposed design has less anchor required than the sample shop drawings.

* All anchors in the proposed design will be color-matched with the surface to which it is on.

PRESRAY Critical Containment Solutions

Presray Corporation
Fax: (845) 855-8034
Wassaic, NY 12592
Email: contact@presray.com

Suggested Specifications For Model FastLogs®-SD Gasketed Aluminum StopLog System

Part 1 - General
- 1.01 Description
  - A. **Work Included:** Provide flood barrier(s) factory assembled with frame(s) and hardware in accordance with the contract documents.
- 1.02 Standards
  - A. Comply with the provisions of (as applicable).
    1. AWS Structural Welding Code.
    2. ASME Structural Welding Code Section IX.
- 1.03 Submittals
  - A. **Manufacturers Data:** Submit installation and maintenance instructions for flood barriers.
  - B. **Shop Drawings:** Submit shop drawings for flood barriers including dimensioned plans and elevations, sections, connections and anchorage, and parts list.
  - C. **Calculations *(Optional)*:** Submit calculations, approved by a qualified engineer, to verify the barrier's ability to withstand the design pressure loading.
- 1.04 Qualifications
  - A. **Experience:** The manufacturer of the flood barrier(s) shall present evidence attesting to at least 5 years of successful experience in the design and manufacture of both the flood barrier and flood barrier seal of the type specified.

Part 2 - Products
- 2.01 Flood barrier shall be Model FastLogs™-SD as manufactured by Presray Corporation.
- 2.02 Materials
  - A. **Stop Logs:** Presray AL6061-T6 aluminum channels.
  - B. **Frames:** Presray AL6061-T6 Jamb Extrusion; no sills necessary unless mandated by Presray Engineering. Steel jambs optional for certain conditions
  - C. **Finish:** Stop logs mill-finish aluminum; jambs mill-finish aluminum. Steel jambs (if used) primed with one coat rust inhibitive, lead free, red primer.
  - D. **Gasket:** Presray type high-density closed cell neoprene sponge with skin, retained in the stop logs and jambs.

Specs (1/2)

- **E. Hardware:** Presray Compression Brackets; Presray Hold Down Brackets; KNBC Turn Knobs.
- 2.03 Design
  - A. Stop logs shall be designed with a minimum 2:1 factor of safety based on material yield strength, and shall provide an effective seal against the design flood level.
  - B. Frame shall have mounting holes for concrete anchors and bolts (options available include epoxy anchors for block walls, and studs for imbedment in concrete).

Part 3 — Execution
- 3.01 Installation
  - A. Install flood barriers in accordance with manufacturer's instructions and approved shop drawings.

Part 4 — Warranty
- 4.01 1 year limited against defects and workmanship from date of shipment

Specs (1/2)

MANCINI

Appendix

Flood Barrier Sample Photos & Drawings

Sample Photo:
Anchors on the Sidewalk (Color-Matched)

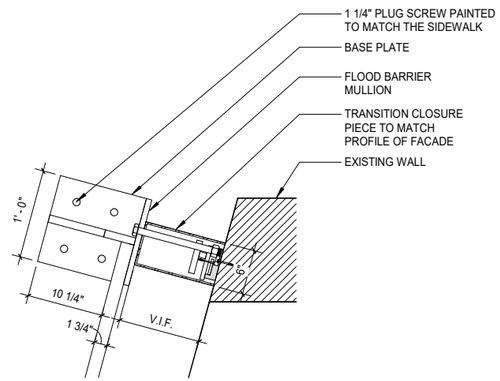

Flood Barrier Attachment
(NTS)

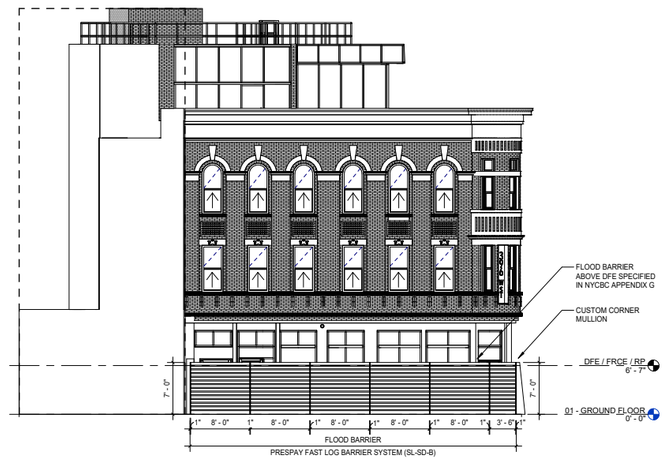

Flood Barrier Deployed
(West Elevation)

Sample Photo:
Flood Barrier Deployed

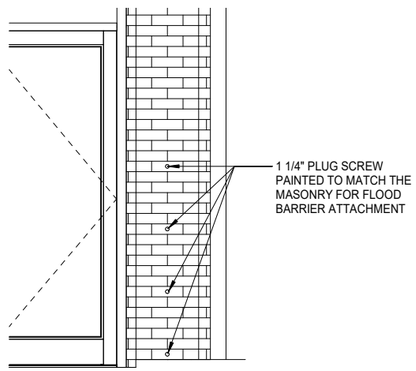

Attachment Anchors on Elevation
(South Elevation)

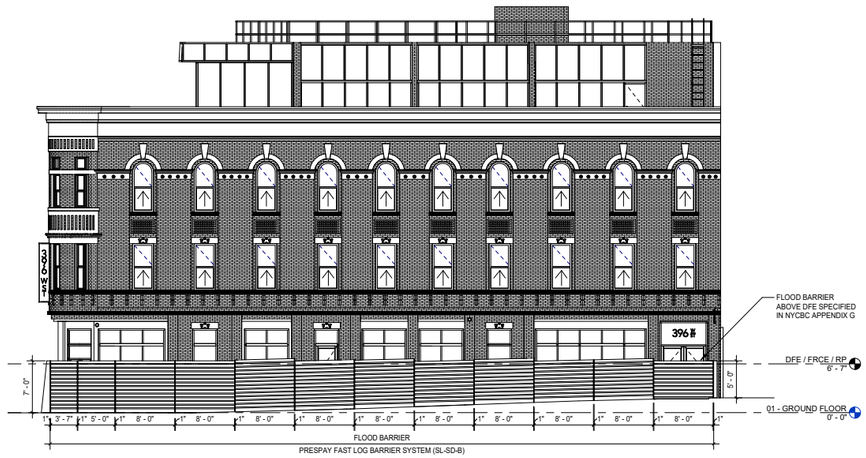

Flood Barrier Deployed
(South Elevation)

MANCINI

Landmarks Preservation Commission

November 23rd, 2021
Public Hearing

The current proposal is:

Preservation Department – Item 3, LPC-22-00769

396 West Street – Weehawken Street Historic District

Borough of Manhattan

To Testify Please Join Zoom

Webinar ID: 823 3172 5442
Passcode: 915898

By Phone:

1 646-558-8656

US (New York) 877-853-5257 (Toll free)

US 888 475 4499 (Toll free)

Note: If you want to testify on an item, join the Zoom webinar at the agenda's "Be Here by" time (about an hour in advance). When the Chair indicates it's time to testify, "raise your hand" via the Zoom app if you want to speak (*9 on the phone). Those who signed up in advance will be called first.