Appendix C1g
Preferred Alternative - Closure Structures

TABLE OF CONTENTS

SHEET NO.	DRAWING NO.	SHEET TITLE
FG100	SANDRESM1-FG100-00.DWG	CLOSURE FOUNDATION MONTGOMERY ST ROLLER GATE GENERAL PLAN
FG101	SANDRESM1-FG101-00.DWG	CLOSURE FOUNDATION MONTGOMERY ST ROLLER GATE GATE MONOLITH LAYOUT PLAN
FG102	SANDRESM1-FG102-00.DWG	CLOSURE FOUNDATION MONTGOMERY ST ROLLER GATE ELEVATION
FG103	SANDRESM1-FG103-00.DWG	CLOSURE STRUCTURES MONTGOMERY ST ROLLER GATE SECTIONS AND DETAILS
FG150	SANDRESM1-FG150-00.DWG	CLOSURE STRUCTURES PIER 42 SWING GATE GENERAL PLAN
FG155	SANDRESM1-FG155-00.DWG	CLOSURE STRUCTURES PIER 42 SWING GATE SECTIONS
FG201	SANDRESM1-FG201-00.DWG	CLOSURE STRUCTURES FDR DRIVE SWING GATES PLAN SHEET 1 OF 2
FG202	SANDRESM1-FG202-00.DWG	CLOSURE STRUCTURES FDR DRIVE SWING GATES PLAN SHEET 2 OF 2
FG206	SANDRESM1-FG206-00.DWG	CLOSURE FOUNDATION FDR DRIVE SWING GATES SECTIONS AND DETAILS
FG270	SANDRESM1-FG270-00.DWG	CLOSURE STRUCTURES FDR DRIVE SWING GATES OVERALL REGRADING PLAN
FG274	SANDRESM1-FG274-00.DWG	CLOSURE STRUCTURES FDR DRIVE SWING GATES REGRADING PROFILES SHEET 1 OF 2
FG275	SANDRESM1-FG275-00.DWG	CLOSURE STRUCTURES FDR DRIVE SWING GATES REGRADING PROFILES SHEET 2 OF 2
FG300	SANDRESM1-FG300-00.DWG	CLOSURE STRUCTURES 14TH STREET CROSSING GENERAL PLAN
FG301	SANDRESM1-FG301-00.DWG	CLOSURE STRUCTURES 14TH STREET CROSSING ELEVATION AND SECTIONS
FG400	SANDRESM1-FG400-00.DWG	CLOSURE STRUCTURES 15TH STREET PEDESTRIAN SWING GATE PLANS
FG401	SANDRESM1-FG401-00.DWG	CLOSURE STRUCTURES 15TH STREET PEDESTRIAN SWING GATE SECTIONS
FG420	SANDRESM1-FG420-00.DWG	CLOSURE STRUCTURES 15TH STREET VEHICULAR SWING GATE GENERAL PLAN
FG421	SANDRESM1-FG421-00.DWG	CLOSURE STRUCTURES 15TH STREET VEHICULAR SWING GATE PARTIAL PLAN
FG425	SANDRESM1-FG425-00.DWG	CLOSURE STRUCTURE 15TH STREET VEHICULAR SWING GATE SECTIONS
FG440	SANDRESM1-FG440-00.DWG	CLOSURE STRUCTURES 15TH STREET GATES REGRADING OVERALL PLAN
FG442	SANDRESM1-FG442-00.DWG	CLOSURE STRUCTURES 15TH STREET GATES REGRADING PROFILES SHEET 1 OF 2
FG500	SANDRESM1-FG500-00.DWG	CLOSURE STRUCTURES EAST 18TH STREET FDR ON RAMP & OCME GATE PLAN
FG501	SANDRESM1-FG501-00.DWG	CLOSURE STRUCTURES MURPHY BROTHERS & OCME SWING GATES ELEVATION
FG502	SANDRESM1-FG502-00.DWG	CLOSURE STRUCTURES EAST 18TH STREET FDR ON RAMP & OCME GATE SECTIONS
FG550	SANDRESM1-FG550-00.DWG	CLOSURE STRUCTURES EAST 18TH STREET FDR EXIT GATE PLAN
FG551	SANDRESM1-FG551-00.DWG	CLOSURE STRUCTURES FDR EXIT GATE SECTION
FG552	SANDRESM1-FG552-00.DWG	CLOSURE STRUCTURES EAST 18TH STREET FDR EXIT GATE REGRADING OVERALL PLAN
FG600	SANDRESM1-FG600-00.DWG	CLOSURE STRUCTURE STUYVESANT COVE SOUTH GATE PLAN
FG601	SANDRESM1-FG601-00.DWG	CLOSURE STRUCTURES FDR EXIT & STUY COVE SOUTH ROLLER GATE ELEVATION
FG609	SANDRESM1-FG609-00.DWG	CLOSURE STRUCTURES EAST 18TH STREET FDR EXIT GATE PLAN & ELEVATION SHEET 1 OF 2
FG610	SANDRESM1-FG610-00.DWG	CLOSURE STRUCTURES EAST 18TH STREET FDR EXIT GATE PLAN & ELEVATION SHEET 2 OF 2
FG611	SANDRESM1-FG611-00.DWG	CLOSURE STRUCTURES STUYVESANT COVE SOUTH GATE PLAN & ELEVATION SHEET 1 OF 2
FG650	SANDRESM1-FG650-00.DWG	CLOSURE STRUCTURES EAST 20TH STREET GATE PLAN
FG651	SANDRESM1-FG651-00.DWG	CLOSURE STRUCTURES EAST 20TH STREET GATE ELEVATION
FG652	SANDRESM1-FG652-00.DWG	CLOSURE STRUCTURES EAST 20TH STREET GATE REGRADING OVERALL PLAN
FG654	SANDRESM1-FG654-00.DWG	CLOSURE STRUCTURES EAST 20TH STREET GATE CONCRETE MONOLITH SHEET 1 OF 2
FG655	SANDRESM1-FG655-00.DWG	CLOSURE STRUCTURES EAST 20TH STREET GATE CONCRETE MONOLITH SHEET 2 OF 2
FG656	SANDRESM1-FG656-00.DWG	CLOSURE STRUCTURES EAST 20TH STREET GATE PLAN & ELEVATION SHEET 1 OF 2
FG657	SANDRESM1-FG657-00.DWG	CLOSURE STRUCTURES EAST 20TH STREET GATE PLAN & ELEVATION SHEET 2 OF 2
FG700	SANDRESM1-FG700-00.DWG	CLOSURE STRUCTURES STUYVESANT COVE NORTH SWING GATE PLAN
FG701	SANDRESM1-FG701-00.DWG	CLOSURE STRUCTURES STUYVESANT COVE NORTH GATE SECTION
FG702	SANDRESM1-FG702-00.DWG	CLOSURE STRUCTURES STUYVESANT COVE NORTH GATE REGRADING OVERALL PLAN
FG750	SANDRESM1-FG750-00.DWG	CLOSURE STRUCTURES EAST 23RD STREET SOUTH AND NORTH GATE PLAN
FG751	SANDRESM1-FG751-00.DWG	CLOSURE STRUCTURES EAST 23RD STREET CROSSING ELEVATION

TABLE OF CONTENTS

SHEET NO.	DRAWING NO.	SHEET TITLE
FG752	SANDRESM1-FG752-00.DWG	CLOSURE STRUCTURES EAST 23RD STREET CROSSING SECTIONS
FG755	SANDRESM1-FG755-00.DWG	CLOSURE STRUCTURES EAST 23RD STREET SOUTH & NORTH GATE CONCRETE MONOLITH SHEET 1 OF 2
FG757	SANDRESM1-FG757-00.DWG	CLOSURE STRUCTURES EAST 23RD STREET SOUTH GATE PLAN & ELEVATION SHEET 1 OF 2
FG800	SANDRESM1-FG800-00.DWG	CLOSURE STRUCTURES WEST SERVICE ROAD CROSSING PLAN
FG801	SANDRESM1-FG801-00.DWG	CLOSURE STRUCTURES WEST SERVICE ROAD CROSSING ELEVATION
FG802	SANDRESM1-FG802-00.DWG	CLOSURE STRUCTURES WEST SERVICE ROAD SECTIONS
FG850	SANDRESM1-FG850-00.DWG	CLOSURE STRUCTURES ASSER LEVY ROLLER GATE PLAN
FG851	SANDRESM1-FG851-00.DWG	CLOSURE STRUCTURES ASSER LEVY ROLLER GATE ELEVATION
FG852	SANDRESM1-FG852-00.DWG	CLOSURE STRUCTURES ASSER LEVY ROLLER GATE REGRADING OVERALL PLAN
FG853	SANDRESM1-FG853-00.DWG	CLOSURE STRUCTURES ASSER LEVY GATE PLAYGROUND GATE CONCRETE MONOLITH SHEET 1 OF 2

CONCEPTUAL REDESIGN SUBMISSION 1/31/2019

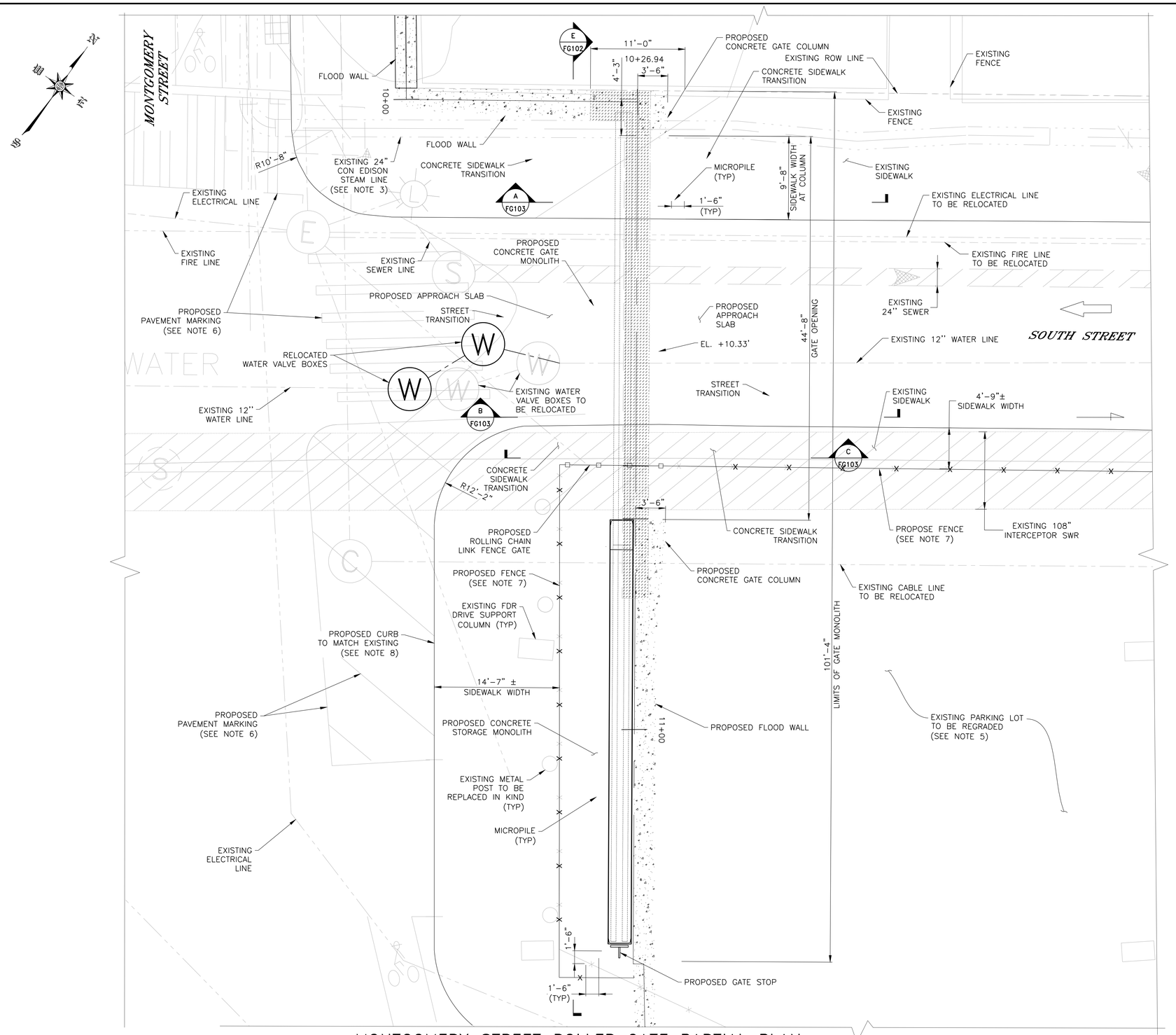

LEGEND:

PROPOSED JET GROUTING ZONE

NOTES:

1. ALL ITEMS CALLED OUT AS EXISTING ARE TO REMAIN UNLESS NOTED OTHERWISE.
2. ALL ELEVATION ARE IN FEET RELATIVE TO NAVD88.
3. GATE SHOWN IN STORED POSITION.
4. LOCATION OF CON EDISON STEAM LINE PER CON EDISON PLATE 16 NO. 567.
5. SEE DRAWING FG132 FOR PARKING LOT REGRADING.
6. SEE DRAWING XXXXX FOR STRIPING PLAN.
7. SEE DRAWING XXXXX FOR FENCING PLAN.
8. SEE DRAWING XXXXX FOR CURB DETAILS.
9. SEE DRAWING XXXXX FOR WATER VALVE BOX RECONSTRUCTION.

CONCEPTUAL

SUBMITTED DATE: 1/31/2019

1"=5' 0 5 10 FT.

TOPOGRAPHIC SURVEY PREPARED BY: FOR SURVEYOR INFORMATION SEE SURVEY SET SU100 DRAWINGS SERIES

MONTGOMERY STREET ROLLER GATE PARTIAL PLAN

SCALE: 1" = 5'

NO.	DATE	DESCRIPTIONS	BY	APPR'D

REVISIONS

FINAL DESIGN SUBMITTED BY: AKRF KSE The AKRF-KSE JV

FINAL DESIGN PREPARED BY: ch2m: CH2M HILL NEW YORK, INC. NAME OF CONSULTANT

SIGNATURE

DATE

CITY OF NEW YORK
DEPARTMENT OF DESIGN + CONSTRUCTION
DIVISION OF INFRASTRUCTURE
BUREAU OF DESIGN

CLOSURE FOUNDATION
MONTGOMERY ST ROLLER GATE
GENERAL PLAN

CH2M DRAWN BY

SANDRESM1-FG100-00.DWG CADD FILE

INSTALLATION OF
EAST SIDE COASTAL RESILIENCY
BOROUGH OF MANHATTAN

CAPITAL PROJECT NO. SANDRESM1 1/31/19

SHEET 162 OF 811

FG100

CONSULTANT DESIGN

CONCEPTUAL REDESIGN SUBMISSION 1/31/2019

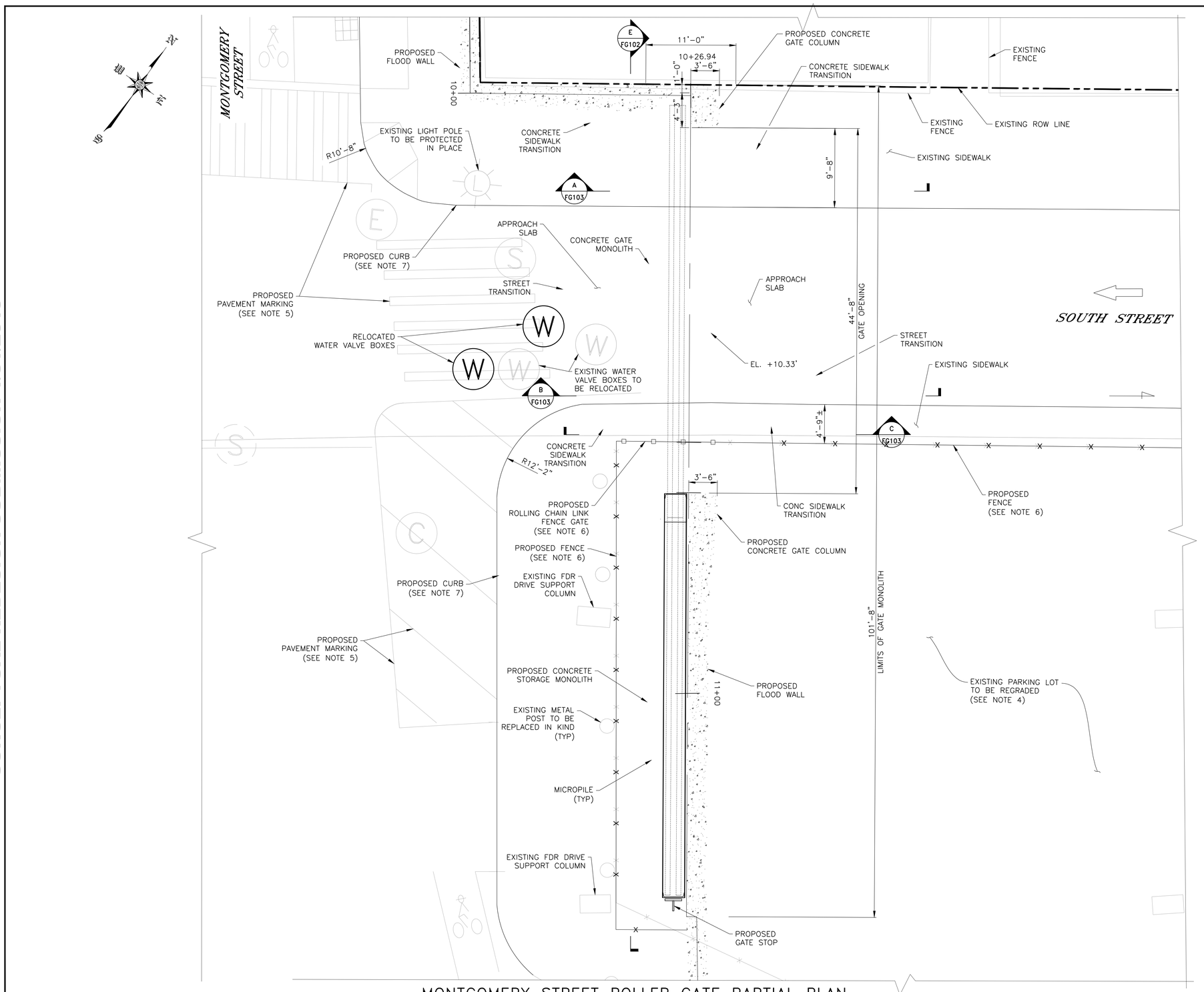

NOTES:

1. ALL ITEMS CALLED OUT AS EXISTING ARE TO REMAIN UNLESS NOTED OTHERWISE.
2. ALL ELEVATION ARE IN FEET RELATIVE TO NAVD88.
3. GATE SHOWN IN STORED POSITION.
4. SEE DRAWING FG132 FOR PARKING LOT REGRADING.
5. SEE DRAWING XXXXX FOR STRIPING PLAN.
6. SEE DRAWING XXXXX FOR FENCING PLAN.
7. SEE DRAWING XXXXX FOR CURB DETAILS.

CONCEPTUAL

SUBMITTED DATE: 1/31/2019

1"=5' 0 5 10 FT.

TOPOGRAPHIC SURVEY PREPARED BY: FOR SURVEYOR INFORMATION SEE SURVEY SET SU100 DRAWINGS SERIES

MONTGOMERY STREET ROLLER GATE PARTIAL PLAN

SCALE: 1" = 5'

NO.	DATE	DESCRIPTIONS	BY	APPR'D

REVISIONS

FINAL DESIGN SUBMITTED BY: AKRF KSE The AKRF-KSE JV

FINAL DESIGN PREPARED BY: ch2m: CH2M HILL NEW YORK, INC. NAME OF CONSULTANT

SIGNATURE

DATE

CITY OF NEW YORK
DEPARTMENT OF DESIGN + CONSTRUCTION
DIVISION OF INFRASTRUCTURE
BUREAU OF DESIGN

CLOSURE STRUCTURES
MONTGOMERY ST ROLLER GATE
GATE MONOLITH LAYOUT PLAN

CH2M DRAWN BY

SANDRESM1-FG101-00.DWG CADD FILE

INSTALLATION OF
EAST SIDE COASTAL RESILIENCY
BOROUGH OF MANHATTAN

CAPITAL PROJECT NO. SANDRESM1 1/31/19

SHEET 163 OF 811

FG101

CONSULTANT DESIGN

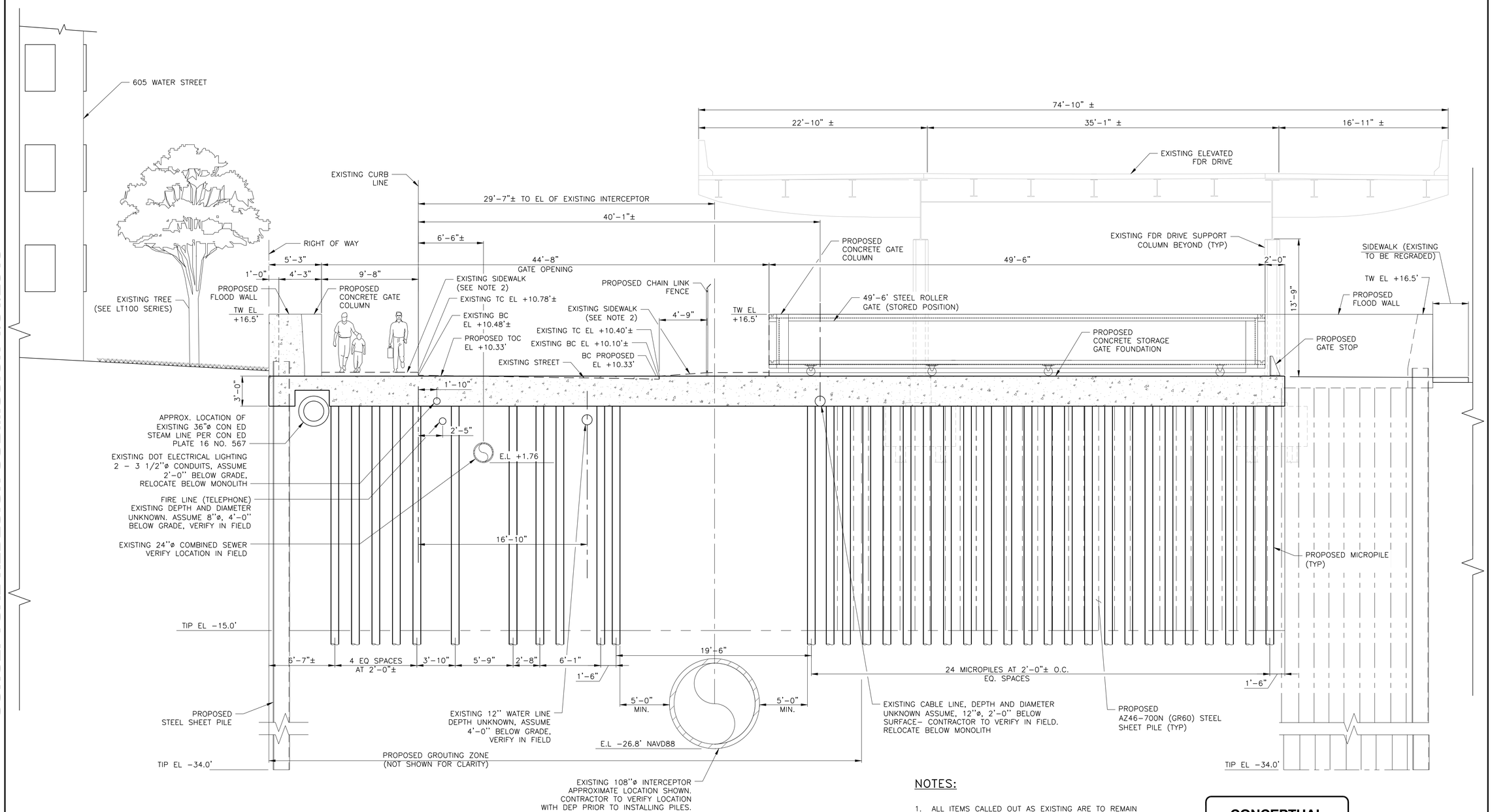

NOTES:

1. ALL ITEMS CALLED OUT AS EXISTING ARE TO REMAIN UNLESS NOTED OTHERWISE.
2. SEE DRAWING XXXXX FOR SIDEWALK RECONSTRUCTION.

CONCEPTUAL

SUBMITTED DATE: 1/31/2019

A5 / F300 ELEVATION LOOKING EAST AT SOUTH STREET W/ GATE OPEN

SCALE 1/4" = 1'-0"

CONCEPTUAL REDESIGN SUBMISSION 1/31/2019

TOPOGRAPHIC SURVEY PREPARED BY: FOR SURVEYOR INFORMATION SEE SURVEY SET SU100 DRAWINGS SERIES

NO.	DATE	DESCRIPTIONS	BY	APPR'D
		REVISIONS		

FINAL DESIGN SUBMITTED BY: AKRF KSE — The AKRF-KSE JV

FINAL DESIGN PREPARED BY: ch2m — CH2M HILL NEW YORK, INC. NAME OF CONSULTANT

SIGNATURE

DATE

CITY OF NEW YORK
DEPARTMENT OF DESIGN + CONSTRUCTION
DIVISION OF INFRASTRUCTURE
BUREAU OF DESIGN

CLOSURE STRUCTURES
MONTGOMERY ST ROLLER GATE
ELEVATION

CH2M DRAWN BY

SANDRESM1-FG102-00.DWG CADD FILE

INSTALLATION OF
EAST SIDE COASTAL RESILIENCY
BOROUGH OF MANHATTAN

CAPITAL PROJECT NO. SANDRESM1 1/31/19

SHEET 164 OF 811

FG102

CONSULTANT DESIGN

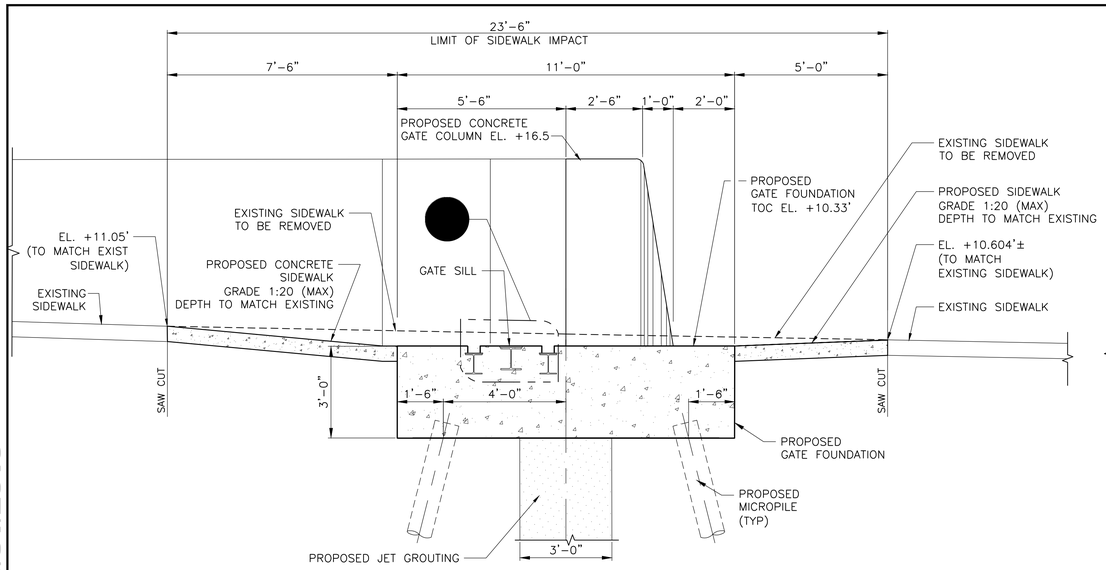

A FG100 SECTION THROUGH SIDEWALK AT NORTH END OF SOUTH STREET
SCALE 1/2" = 1'-0"

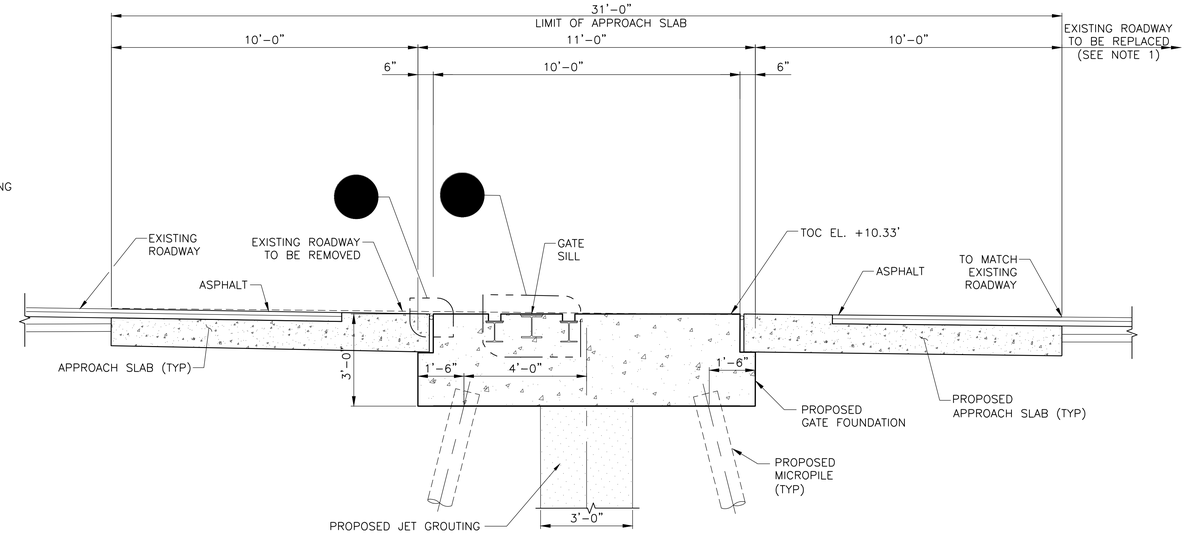

B FG100 SECTION THROUGH STREET AT END OF SOUTH STREET
SCALE 1/2" = 1'-0"

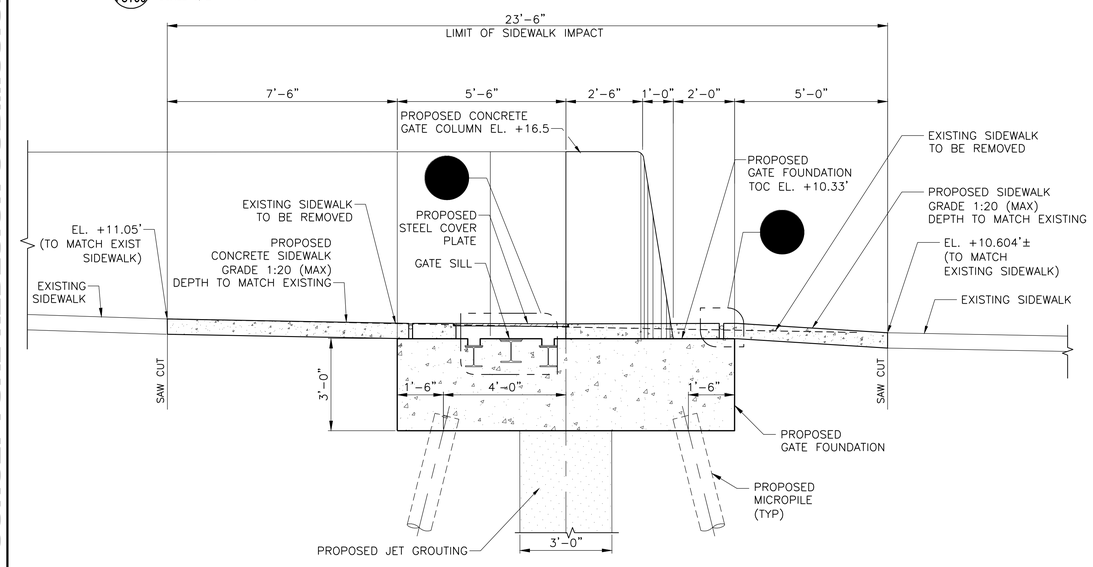

A FG100 ALTERNATIVE SECTION THROUGH SIDEWALK AT NORTH END OF SOUTH STREET
SCALE 1/2" = 1'-0"

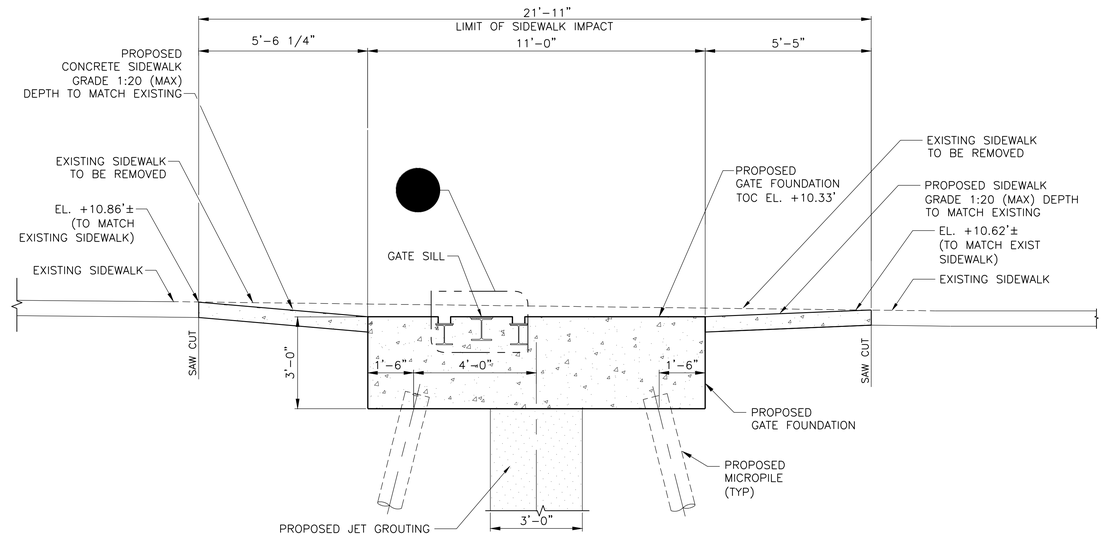

C FG100 SECTION THROUGH SIDEWALK AT SOUTH END OF SOUTH STREET
SCALE 1/2" = 1'-0"

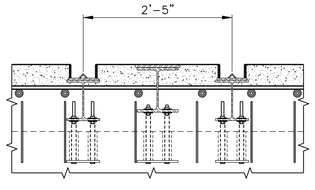

1 SECTION PLATE DETAIL
SCALE 1" = 1'-0"

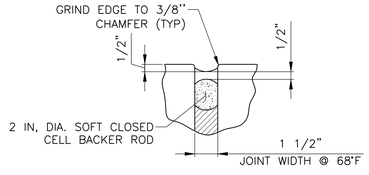

2 JOINT SEALING DETAIL
SCALE 3"=1'-0"

CONCEPTUAL

SUBMITTED DATE: 1/31/2019

NOTES:

1. ALL ITEMS CALLED OUT AS EXISTING ARE TO REMAIN UNLESS NOTED OTHERWISE.
2. SEE DWG FG130, FG132, FG133 AND FG134 FOR REGRADING PLAN AND PROFILE.

TOPOGRAPHIC SURVEY PREPARED BY: FOR SURVEYOR INFORMATION SEE SURVEY SET SU100 DRAWINGS SERIES

NO.	DATE	DESCRIPTIONS	BY	APPR'D
		REVISIONS		

FINAL DESIGN SUBMITTED BY: AKRF KSE The AKRF-KSE JV

FINAL DESIGN PREPARED BY: ch2m CH2M HILL NEW YORK, INC. NAME OF CONSULTANT

SIGNATURE

DATE

CITY OF NEW YORK
DEPARTMENT OF DESIGN + CONSTRUCTION
DIVISION OF INFRASTRUCTURE
BUREAU OF DESIGN

CLOSURE STRUCTURES
MONTGOMERY ST ROLLER GATE
SECTIONS AND DETAILS

CH2M DRAWN BY

SANDRESM1-FG103-00.DWG CADD FILE

INSTALLATION OF
EAST SIDE COASTAL RESILIENCY
BOROUGH OF MANHATTAN

CAPITAL PROJECT NO. SANDRESM1 1/31/19

SHEET 165 OF 811

FG103

CONSULTANT DESIGN

CONCEPTUAL REDESIGN SUBMISSION 1/31/2019

CONCEPTUAL REDESIGN SUBMISSION 1/31/2019

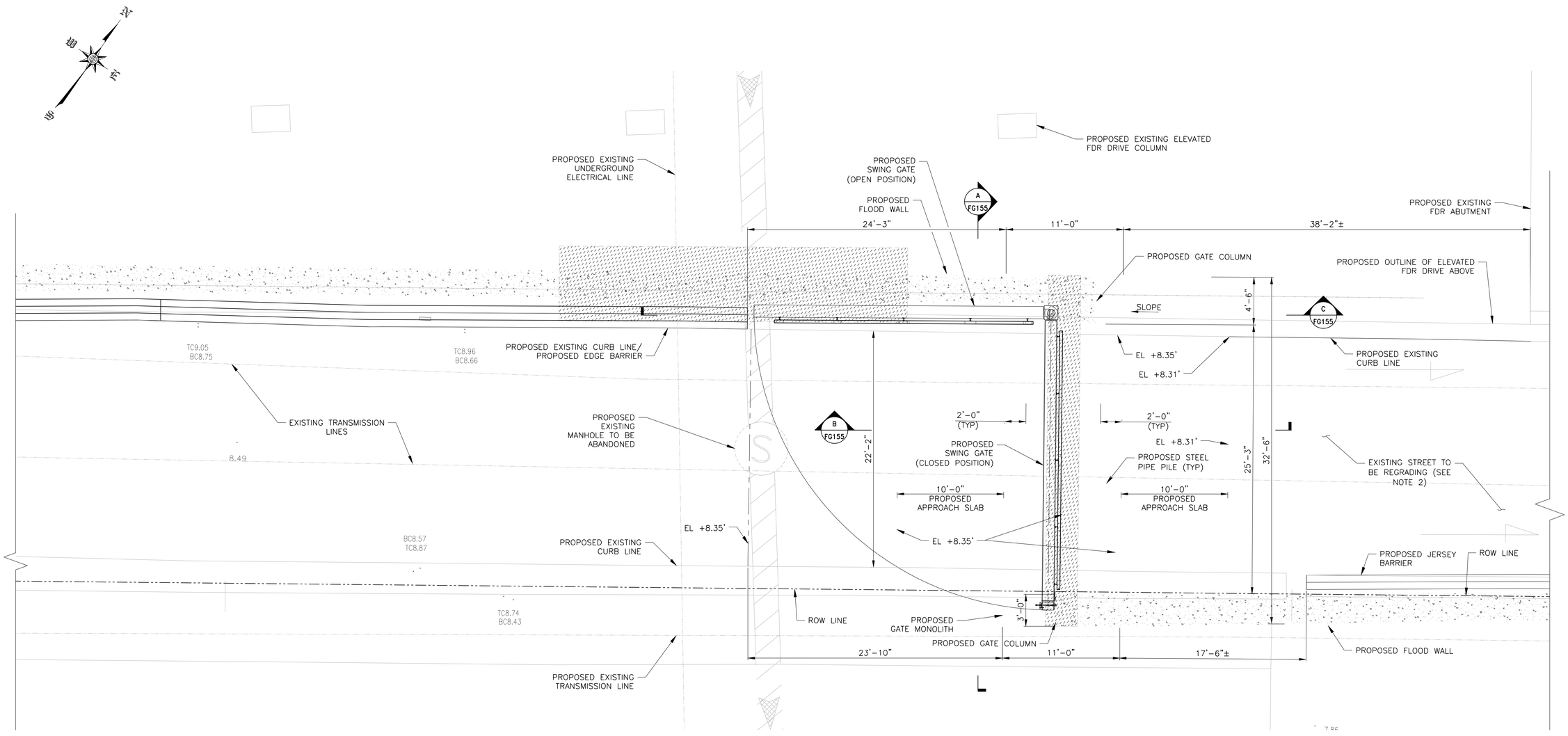

PIER 42 SWING GATE
PARTIAL PLAN
SCALE: ¼" = 1'-0"

CONCEPTUAL

SUBMITTED DATE: 1/31/2019

NOTE:

1. ALL ITEMS CALLED OUT AS EXISTING ARE TO REMAIN UNLESS NOTED OTHERWISE.
2. SEE DRAWING FG170, FG171 AND FG172 FOR STREET REGRADING.

LEGEND:

PROPOSED JET GROUTING ZONE

TOPOGRAPHIC SURVEY PREPARED BY: FOR SURVEYOR INFORMATION SEE SURVEY SET SU100 DRAWINGS SERIES

NO.	DATE	DESCRIPTIONS	BY	APPR'D

REVISIONS

FINAL DESIGN SUBMITTED BY: AKRF KSE — The AKRF-KSE JV

FINAL DESIGN PREPARED BY: ch2m — CH2M HILL NEW YORK, INC. NAME OF CONSULTANT

SIGNATURE

DATE

CITY OF NEW YORK
DEPARTMENT OF DESIGN + CONSTRUCTION
DIVISION OF INFRASTRUCTURE
BUREAU OF DESIGN

CLOSURE STRUCTURES
PIER 42 SWING GATE
GENERAL PLAN

CH2M DRAWN BY

SANDRESM1-FG150-00.DWG CADD FILE

INSTALLATION OF
EAST SIDE COASTAL RESILIENCY
BOROUGH OF MANHATTAN

CAPITAL PROJECT NO. SANDRESM1 1/31/19

SHEET 177 OF 811

FG150

CONSULTANT DESIGN

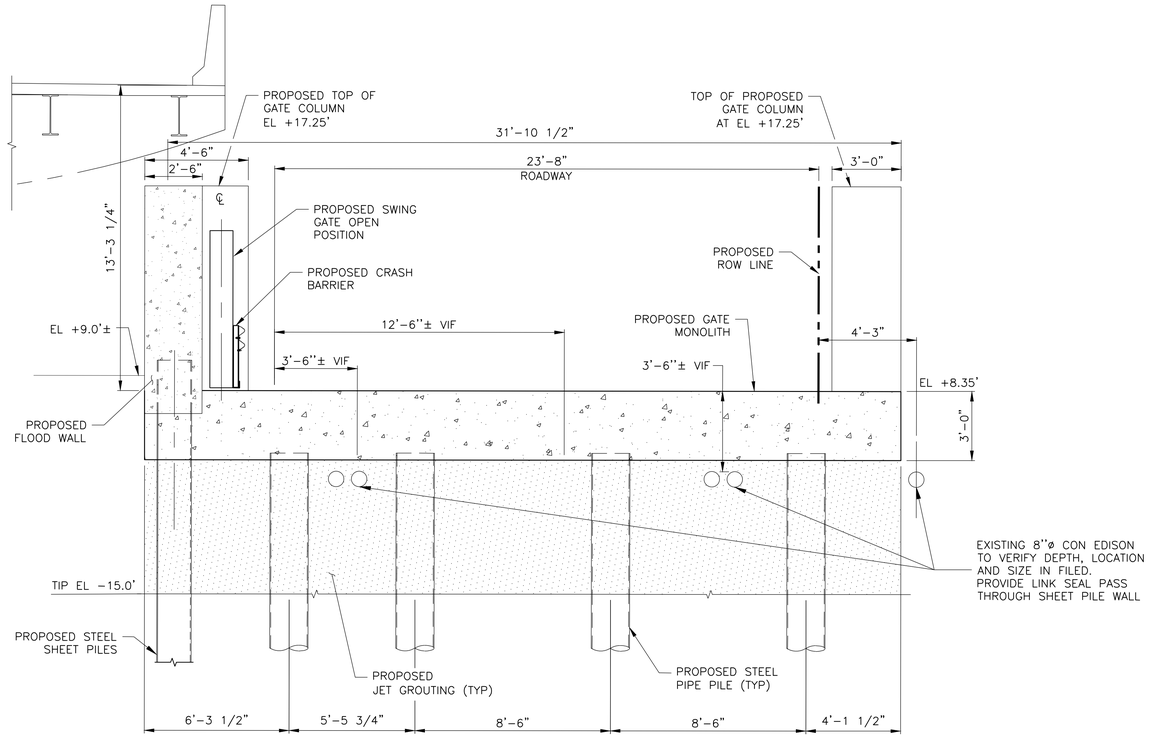

A FG150 SECTION LOOKING NORTH TOWARD RAMP
SCALE 3/8"=1'-0"

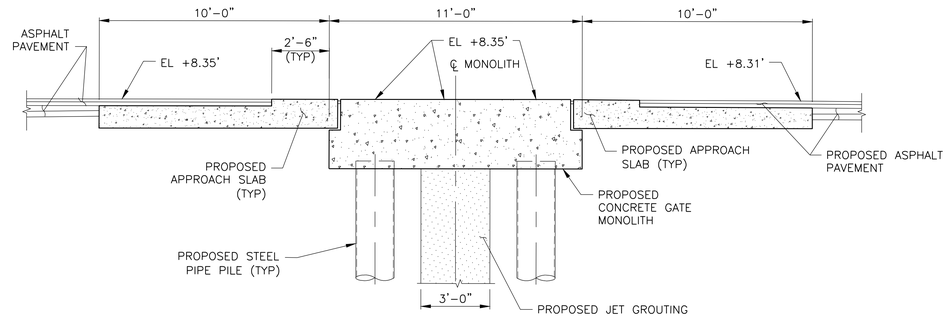

B FG150 SECTION
SCALE 3/8"=1'-0"

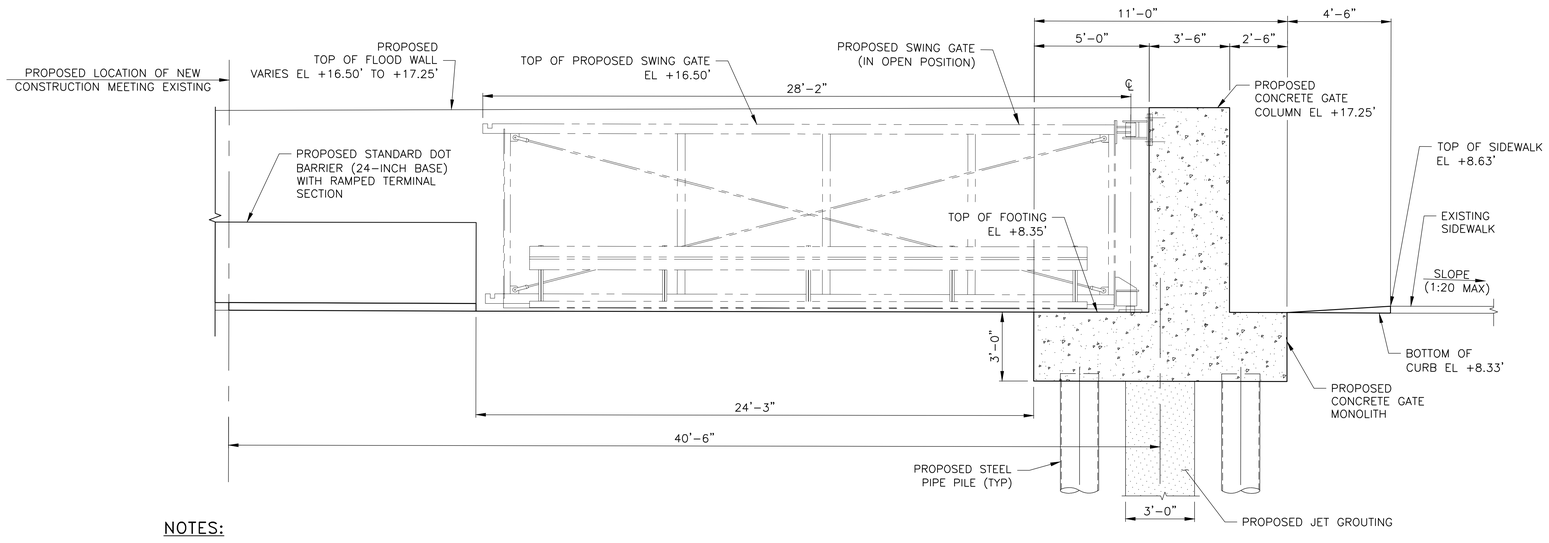

C FG150 SECTION
SCALE 3/8"=1'-0"

NOTES:

1. ALL ITEMS CALLED OUT AS EXISTING ARE TO REMAIN UNLESS NOTED OTHERWISE.
2. ALL TC AND BC ELEVATIONS ARE EXISTING SPOT ELEVATIONS RELATIVE TO NAVD88.

CONCEPTUAL

SUBMITTED DATE: 1/31/2019

TOPOGRAPHIC SURVEY PREPARED BY: FOR SURVEYOR INFORMATION SEE SURVEY SET SU100 DRAWINGS SERIES

NO.	DATE	DESCRIPTIONS	BY	APPR'D
		REVISIONS		

FINAL DESIGN SUBMITTED BY: AKRF KSE The AKRF-KSE JV

FINAL DESIGN PREPARED BY: ch2m: CH2M HILL NEW YORK, INC. NAME OF CONSULTANT

SIGNATURE

DATE

CITY OF NEW YORK
DEPARTMENT OF DESIGN + CONSTRUCTION
DIVISION OF INFRASTRUCTURE
BUREAU OF DESIGN

CLOSURE STRUCTURES
PIER 42 SWING GATE
SECTIONS

CH2M DRAWN BY

SANDRESM1-FG155-00.DWG CADD FILE

INSTALLATION OF
EAST SIDE COASTAL RESILIENCY
BOROUGH OF MANHATTAN

CAPITAL PROJECT NO. SANDRESM1 1/31/19

SHEET 179 OF 811

FG155

CONSULTANT DESIGN

CONCEPTUAL REDESIGN SUBMISSION 1/31/2019

CONCEPTUAL REDESIGN SUBMISSION 1/31/2019

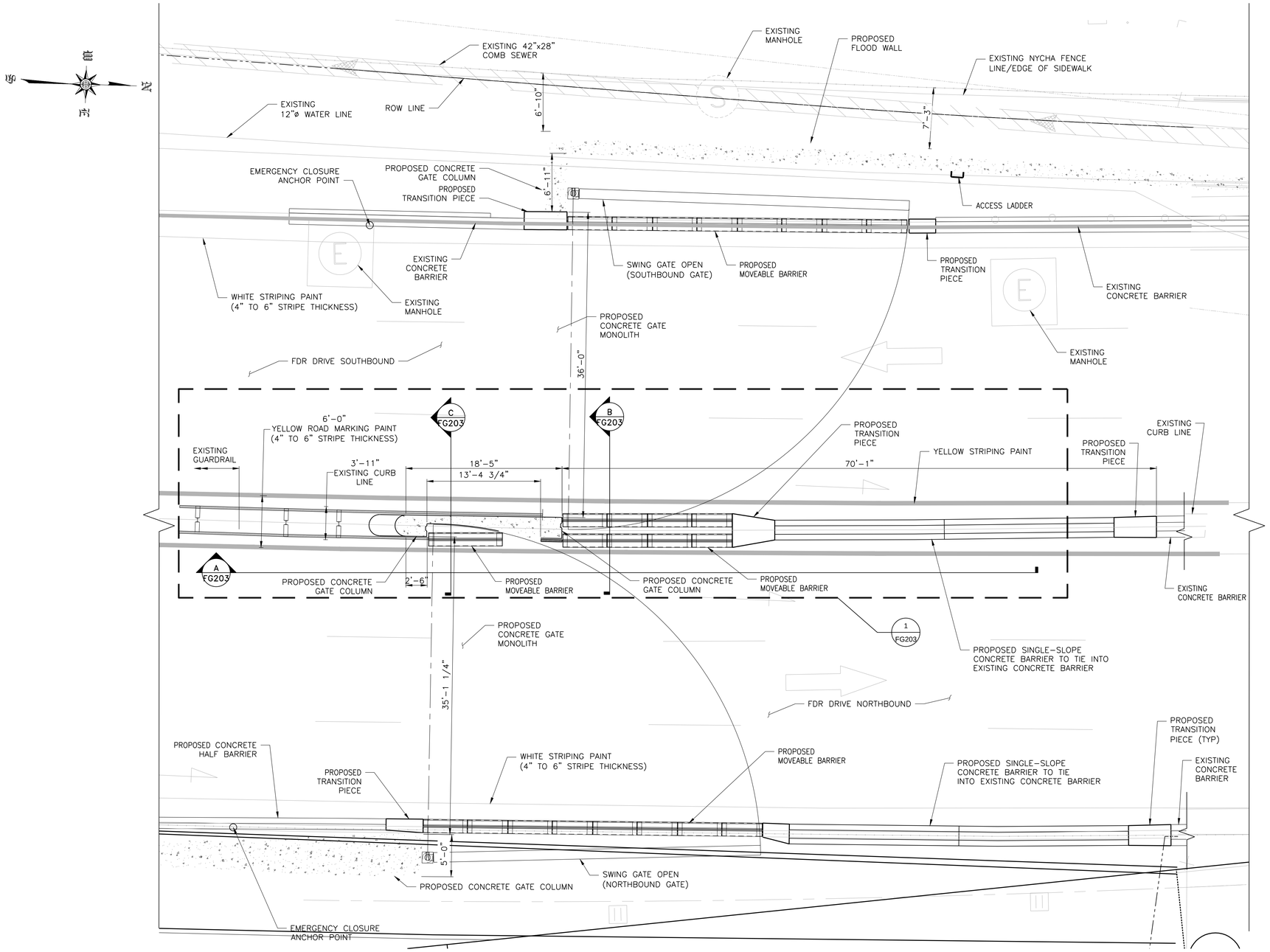

NOTES:

1. ALL EXISTING ITEMS CALLED OUT ARE TO REMAIN UNLESS NOTED OTHERWISE.
2. FOUNDATION ELEMENTS NOT SHOWN FOR CLARITY.
3. SEE DRAWINGS XXX FOR ROAD STRIPING PLAN.
4. SEE DRAWINGS FG270, FG274 AND FG275 FOR STREET REGRADING.
5. SEE DRAWINGS XXX FOR ROADWAY, CURB AND SIDEWAK LAYOUT.

CONCEPTUAL

SUBMITTED DATE: 1/31/2019

FDR DRIVE CROSSING
SWING GATE PLAN – OPEN POSITION

SCALE: 3/16" = 1'-0"

TOPOGRAPHIC SURVEY PREPARED BY: FOR SURVEYOR INFORMATION SEE SURVEY SET SU100 DRAWINGS SERIES

NO.	DATE	DESCRIPTIONS	BY	APPR'D

REVISIONS

FINAL DESIGN SUBMITTED BY: AKRF KSE The AKRF-KSE JV

FINAL DESIGN PREPARED BY: ch2m: CH2M HILL NEW YORK, INC. NAME OF CONSULTANT

SIGNATURE

DATE

CITY OF NEW YORK
DEPARTMENT OF DESIGN + CONSTRUCTION
DIVISION OF INFRASTRUCTURE
BUREAU OF DESIGN

CLOSURE STRUCTURES
FDR DRIVE SWING GATES PLAN
SHEET 1 OF 2

CH2M DRAWN BY

SANDRESM1-FG201-00.DWG CADD FILE

INSTALLATION OF
EAST SIDE COASTAL RESILIENCY
BOROUGH OF MANHATTAN

CAPITAL PROJECT NO. SANDRESM1 1/31/19

SHEET 190 OF 811

FG201

CONSULTANT DESIGN

CONCEPTUAL REDESIGN SUBMISSION 1/31/2019

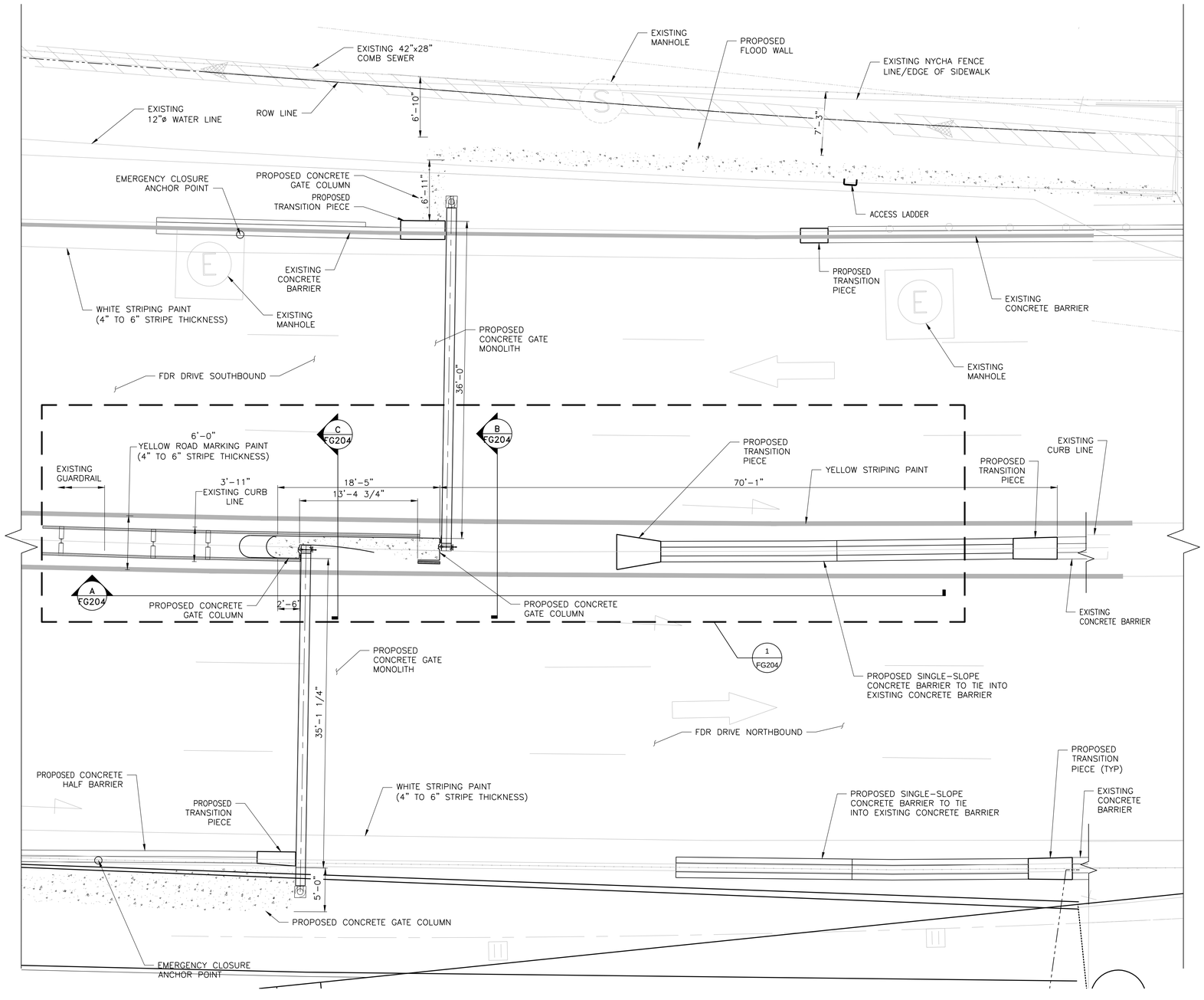

FDR DRIVE CROSSING
SWING GATE PLAN – CLOSED POSITION

SCALE: 3/16" = 1'-0"

NOTES:

1. ALL EXISTING ITEMS CALLED OUT ARE TO REMAIN UNLESS NOTED OTHERWISE.
2. FOUNDATION ELEMENTS NOT SHOWN FOR CLARITY.
3. SEE DRAWINGS XXX FOR ROAD STRIPING PLAN.
4. SEE DRAWINGS FG270, FG274 AND FG275 FOR STREET REGRADING.
5. SEE DRAWINGS XXX FOR ROADWAY, CURB AND SIDEWAK LAYOUT.

CONCEPTUAL

SUBMITTED DATE: 1/31/2019

TOPOGRAPHIC SURVEY PREPARED BY: FOR SURVEYOR INFORMATION SEE SURVEY SET SU100 DRAWINGS SERIES

NO.	DATE	DESCRIPTIONS	BY	APPR'D

REVISIONS

FINAL DESIGN SUBMITTED BY: AKRF KSE — The AKRF-KSE JV

FINAL DESIGN PREPARED BY: ch2m — CH2M HILL NEW YORK, INC. NAME OF CONSULTANT

SIGNATURE

DATE

CITY OF NEW YORK
DEPARTMENT OF DESIGN + CONSTRUCTION
DIVISION OF INFRASTRUCTURE
BUREAU OF DESIGN

CLOSURE STRUCTURES
FDR DRIVE SWING GATES PLAN
SHEET 2 OF 2

CH2M DRAWN BY

SANDRESM1-FG202-00.DWG CADD FILE

INSTALLATION OF
EAST SIDE COASTAL RESILIENCY
BOROUGH OF MANHATTAN

CAPITAL PROJECT NO. SANDRESM1 1/31/19

SHEET 191 OF 811

FG202

CONSULTANT DESIGN

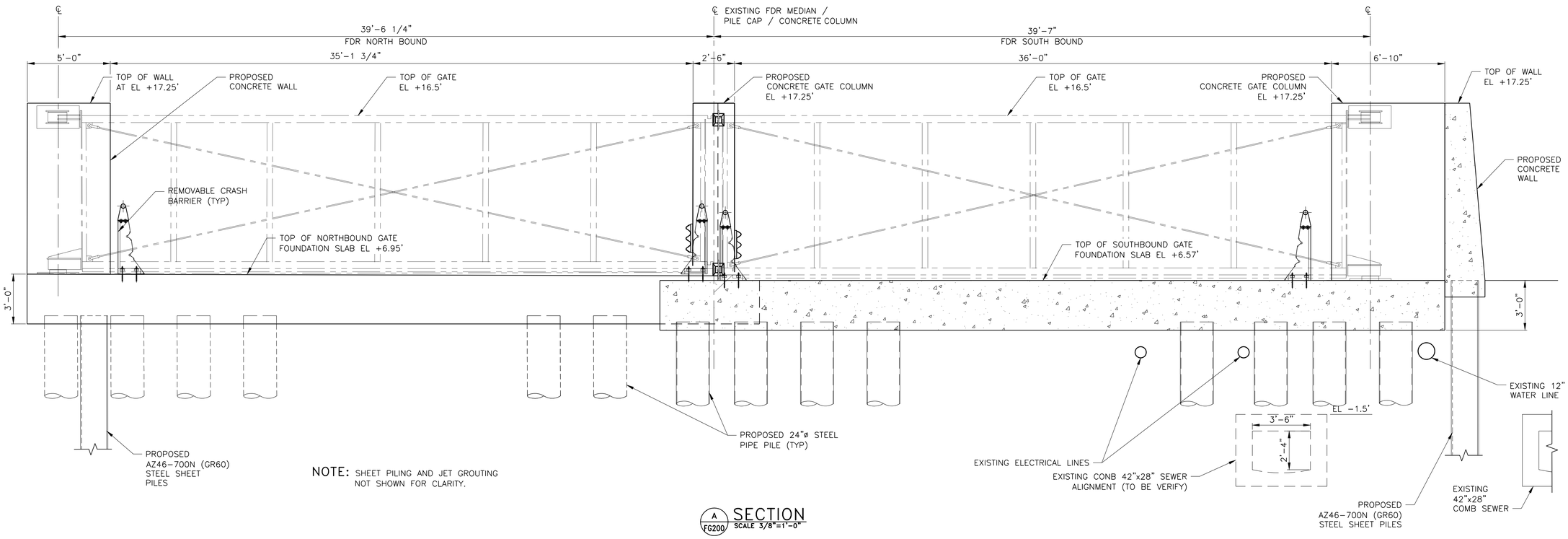

NOTE: SHEET PILING AND JET GROUTING NOT SHOWN FOR CLARITY.

A FG200 SECTION
SCALE 3/8"=1'-0"

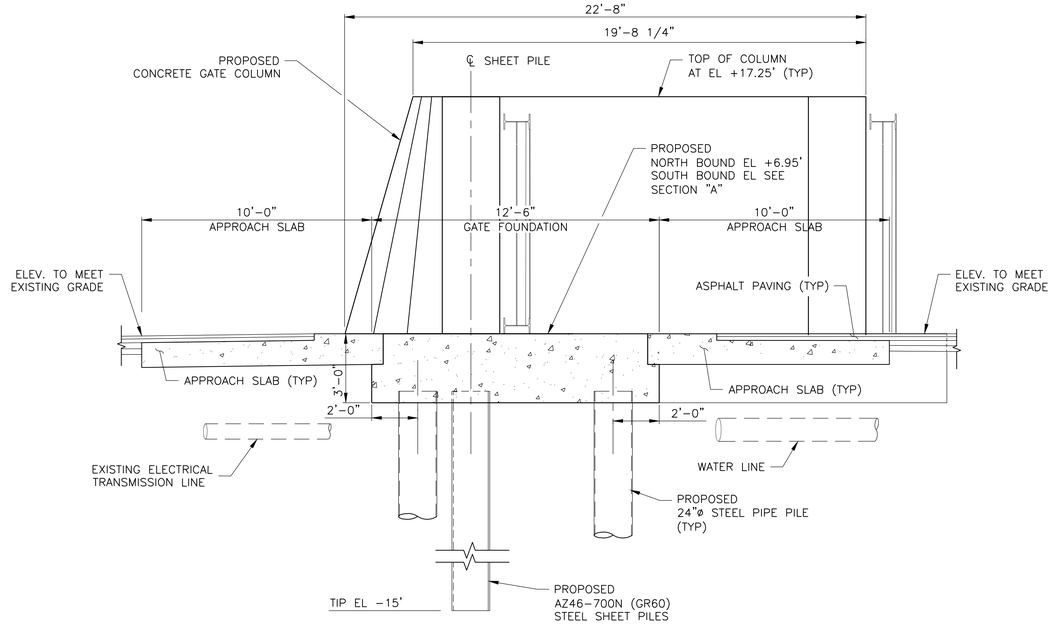

B FG200 SECTION
SCALE 3/8"=1'-0"

NOTES:

1. ALL ITEMS CALLED OUT AS EXISTING ARE TO REMAIN UNLESS NOTED OTHERWISE.
2. SEE DRAWING FG207 FOR PILE AND MONOLITH LAYOUT.
3. UTILITIES ARE SHOWN IN APPROXIMATE LOCATIONS AND SHALL BE VERIFIED IN THE FIELD. THE INSTALLATION OF PILE FOUNDATION SHALL BE COORDINATED WITH FIELD VERIFIED LOCATION OF UTILITIES.

CONCEPTUAL

SUBMITTED DATE: 1/31/2019

CONCEPTUAL REDESIGN SUBMISSION 1/31/2019

TOPOGRAPHIC SURVEY PREPARED BY: FOR SURVEYOR INFORMATION SEE SURVEY SET SU100 DRAWINGS SERIES

NO.	DATE	DESCRIPTIONS	BY	APPR'D

REVISIONS

FINAL DESIGN SUBMITTED BY: AKRF KSE — The AKRF-KSE JV

FINAL DESIGN PREPARED BY: ch2m — CH2M HILL NEW YORK, INC. NAME OF CONSULTANT

SIGNATURE

DATE

CITY OF NEW YORK
DEPARTMENT OF DESIGN + CONSTRUCTION
DIVISION OF INFRASTRUCTURE
BUREAU OF DESIGN

CLOSURE FOUNDATION
FDR DRIVE SWING GATES
SECTIONS AND DETAILS

CH2M — DRAWN BY
SANDRESM1-FG206-00.DWG — CADD FILE

INSTALLATION OF
EAST SIDE COASTAL RESILIENCY
BOROUGH OF MANHATTAN

CAPITAL PROJECT NO. SANDRESM1 1/31/19

SHEET 194 OF 811

FG206

CONSULTANT DESIGN

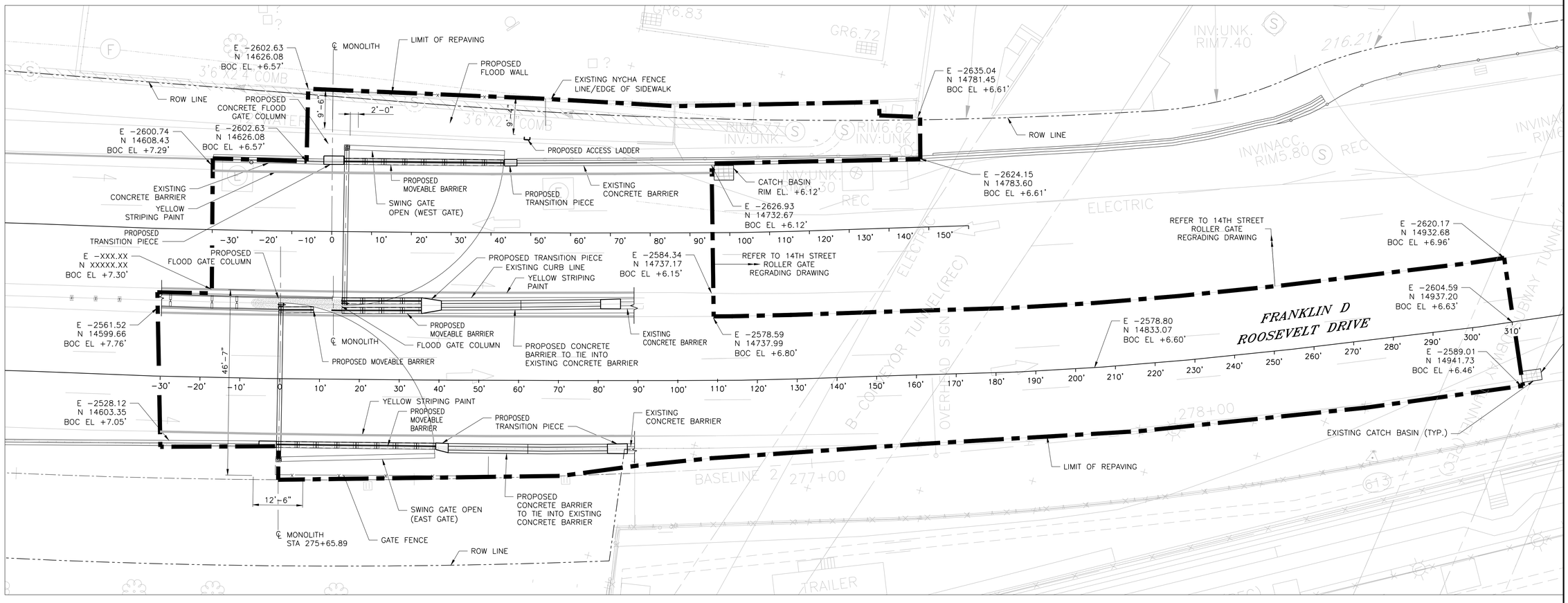

FDR DRIVE VEHICULAR CROSSING
SWING GATES – REGRADING PLAN

SCALE: 3/32" = 1'-0"

NOTES:

1. ALL ITEMS CALLED OUT AS EXISTING ARE TO REMAIN UNLESS NOTED OTHERWISE.

CONCEPTUAL

SUBMITTED DATE: 1/31/2019

CONCEPTUAL REDESIGN SUBMISSION 1/31/2019

TOPOGRAPHIC SURVEY PREPARED BY: FOR SURVEYOR INFORMATION SEE SURVEY SET SU100 DRAWINGS SERIES

NO.	DATE	DESCRIPTIONS	BY	APPR'D

REVISIONS

FINAL DESIGN SUBMITTED BY: AKRF KSE — The AKRF-KSE JV

FINAL DESIGN PREPARED BY: ch2m — CH2M HILL NEW YORK, INC. NAME OF CONSULTANT

SIGNATURE

DATE

CITY OF NEW YORK
DEPARTMENT OF DESIGN + CONSTRUCTION
DIVISION OF INFRASTRUCTURE
BUREAU OF DESIGN

CLOSURE STRUCTURES
FDR DRIVE SWING GATES
OVERALL REGRADING PLAN

CH2M DRAWN BY

SANDRESM1-FG270-00.DWG CADD FILE

INSTALLATION OF
EAST SIDE COASTAL RESILIENCY
BOROUGH OF MANHATTAN

CAPITAL PROJECT NO. SANDRESM1 1/31/19

SHEET 208 OF 811

FG270

CONSULTANT DESIGN

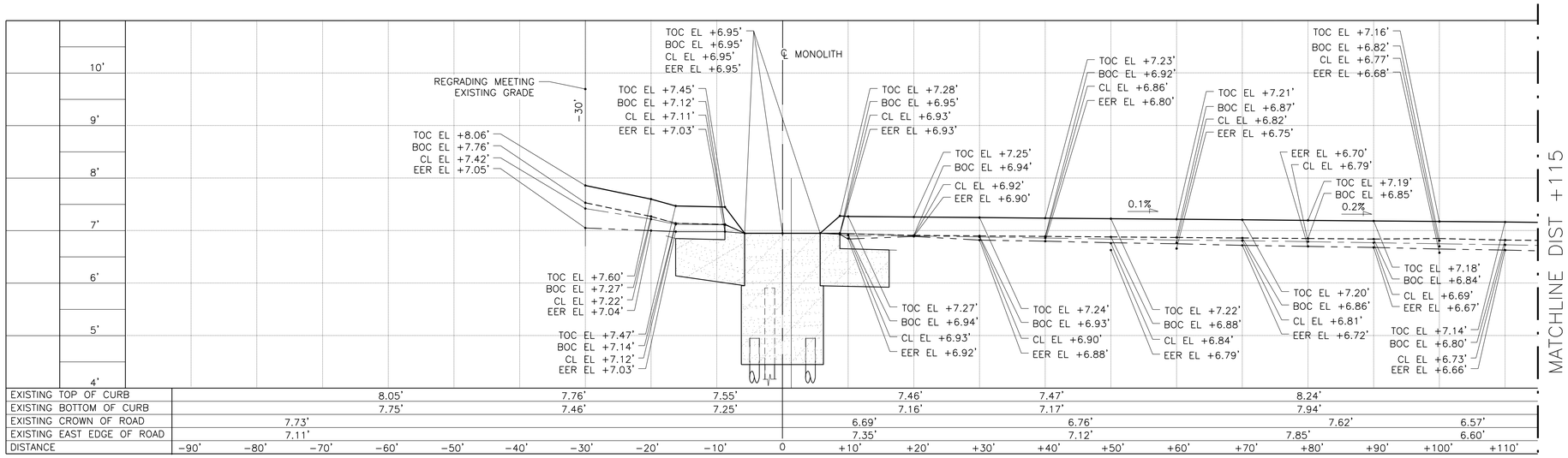

FDR DRIVE SWING GATE
NORTHBOUND STREET PROFILE

HORIZ. SCALE 1/8" = 1'-0", VERT. SCALE 1" = 1'-0"

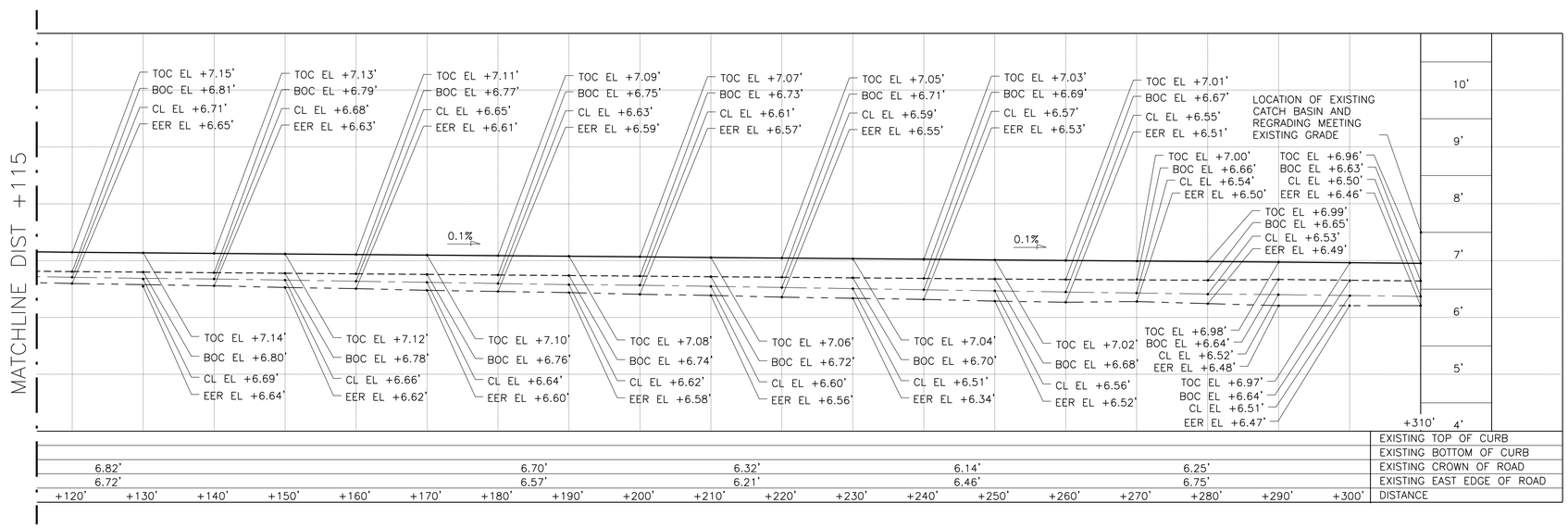

FDR DRIVE SWING GATE
NORTHBOUND STREET PROFILE

HORIZ. SCALE 1/8" = 1'-0", VERT. SCALE 1" = 1'-0"

LEGEND

- TOP OF CURB (TOC)
- CROWN/ CL OF ROAD (CL)
- BOTTOM OF CURB (BOC)
- CL CENTERLINE
- EAST EDGE OF ROAD (EER)

CONCEPTUAL

SUBMITTED DATE: 1/31/2019

CONCEPTUAL REDESIGN SUBMISSION 1/31/2019

TOPOGRAPHIC SURVEY PREPARED BY: FOR SURVEYOR INFORMATION SEE SURVEY SET SU100 DRAWINGS SERIES

NO.	DATE	DESCRIPTIONS	BY	APPR'D
		REVISIONS		

FINAL DESIGN SUBMITTED BY: AKRF KSE — The AKRF-KSE JV

FINAL DESIGN PREPARED BY: ch2m — CH2M HILL NEW YORK, INC. NAME OF CONSULTANT

SIGNATURE

DATE

CITY OF NEW YORK
DEPARTMENT OF DESIGN + CONSTRUCTION
DIVISION OF INFRASTRUCTURE
BUREAU OF DESIGN

CLOSURE STRUCTURES
FDR DRIVE SWING GATES
REGRADING PROFILES SHEET 1 OF 2

CH2M DRAWN BY

SANDRESM1-FG274-00.DWG CADD FILE

INSTALLATION OF
EAST SIDE COASTAL RESILIENCY
BOROUGH OF MANHATTAN

CAPITAL PROJECT NO. SANDRESM1 1/31/19

SHEET 209 OF 811

FG274

CONSULTANT DESIGN

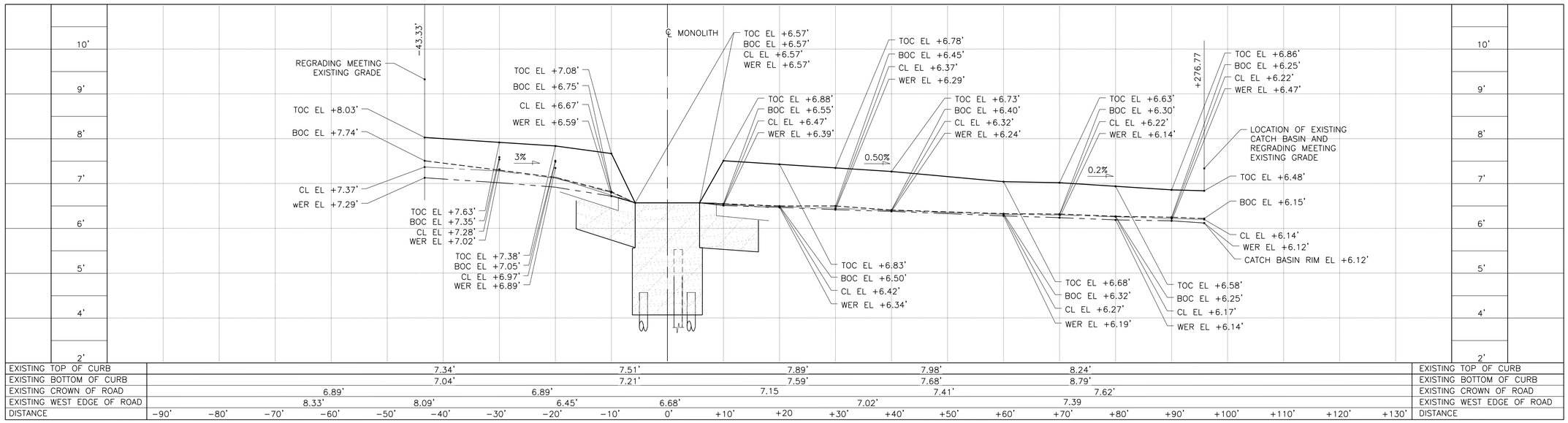

EXISTING TOP OF CURB	7.34'						7.51'					7.89'				7.98'			8.24'					
EXISTING BOTTOM OF CURB	7.04'						7.21'					7.59'				7.68'			8.79'					
EXISTING CROWN OF ROAD	6.89'						6.89'					7.15				7.41'			7.62'					
EXISTING WEST EDGE OF ROAD	8.33'				8.09'		6.45'			6.68'		7.02'							7.39					
DISTANCE	-90'	-80'	-70'	-60'	-50'	-40'	-30'	-20'	-10'	0'	+10'	+20	+30'	+40'	+50'	+60'	+70'	+80'	+90'	+100'	+110'	+120'	+130'	

FDR DRIVE SWING GATE
SOUTHBOUND STREET PROFILE

HORIZ. SCALE 1/8" = 1'-0", VERT. SCALE 1" = 1'-0"

LEGEND

- TOP OF CURB (TOC)
- CROWN/ CL OF ROAD (CL)
- BOTTOM OF CURB (BOC)
- CL CENTERLINE
- WEST EDGE OF ROAD (WER)

CONCEPTUAL

SUBMITTED DATE: 1/31/2019

NO.	DATE	DESCRIPTIONS	BY	APPR'D

REVISIONS

TOPOGRAPHIC SURVEY PREPARED BY: FOR SURVEYOR
INFORMATION SEE SURVEY SET SU100 DRAWINGS SERIES

FINAL DESIGN SUBMITTED BY: AKRF KSE — The AKRF-KSE JV

FINAL DESIGN PREPARED BY: ch2m — CH2M HILL NEW YORK, INC. NAME OF CONSULTANT

SIGNATURE

DATE

CITY OF NEW YORK
DEPARTMENT OF DESIGN + CONSTRUCTION
DIVISION OF INFRASTRUCTURE
BUREAU OF DESIGN

CLOSURE STRUCTURES
FDR DRIVE SWING GATES
REGRADING PROFILES SHEET 2 OF 2

CH2M DRAWN BY

SANDRESM1-FG275-00.DWG CADD FILE

INSTALLATION OF
EAST SIDE COASTAL RESILIENCY
BOROUGH OF MANHATTAN

CAPITAL PROJECT NO. SANDRESM1 1/31/19

SHEET 210 OF 811

FG275

CONSULTANT DESIGN

CONCEPTUAL REDESIGN SUBMISSION 1/31/2019

CONCEPTUAL REDESIGN SUBMISSION 1/31/2019

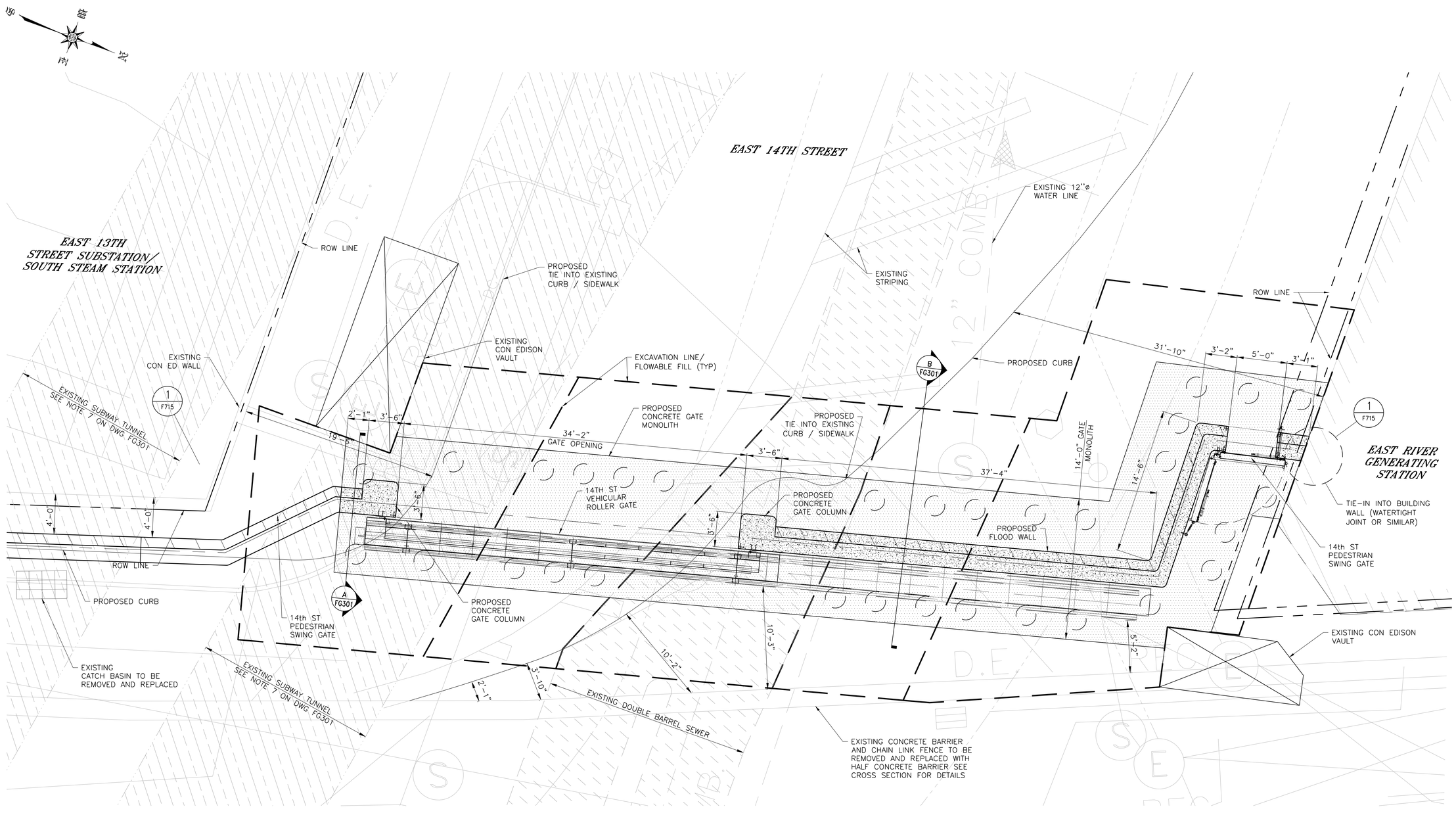

14TH STREET CROSSING – PLAN

SCALE: ¼" = 1'-0"

NOTES:

1. ALL ITEMS CALLED OUT AS EXISTING ARE TO REMAIN UNLESS NOTED OTHERWISE.
2. SEE DRAWINGS FG320, FG322 AND FG323 FOR STREET REGRADING.
3. SEE DRAWING F302 FOR PILE AND MONOLITH LAYOUT.
4. SEE DRAWING XXXXX FOR ROAD STRIPING PLAN.
5. SEE DRAWING XXXXX FOR ROADWAY, CURB AND SIDEWALK LAYOUT.

CONCEPTUAL

SUBMITTED DATE: 1/31/2019

NO.	DATE	DESCRIPTIONS	BY	APPR'D

REVISIONS

TOPOGRAPHIC SURVEY PREPARED BY: FOR SURVEYOR INFORMATION SEE SURVEY SET SU100 DRAWINGS SERIES

FINAL DESIGN SUBMITTED BY: AKRF KSE — The AKRF-KSE JV

FINAL DESIGN PREPARED BY: ch2m — CH2M HILL NEW YORK, INC. NAME OF CONSULTANT

SIGNATURE

DATE

CITY OF NEW YORK
DEPARTMENT OF DESIGN + CONSTRUCTION
DIVISION OF INFRASTRUCTURE
BUREAU OF DESIGN

CLOSURE STRUCTURES
14TH STREET CROSSING
GENERAL PLAN

CH2M — DRAWN BY

SANDRESM1-FG300-00.DWG — CADD FILE

INSTALLATION OF
EAST SIDE COASTAL RESILIENCY
BOROUGH OF MANHATTAN

CAPITAL PROJECT NO. SANDRESM1 1/31/19

SHEET 211 OF 811

FG300

CONSULTANT DESIGN

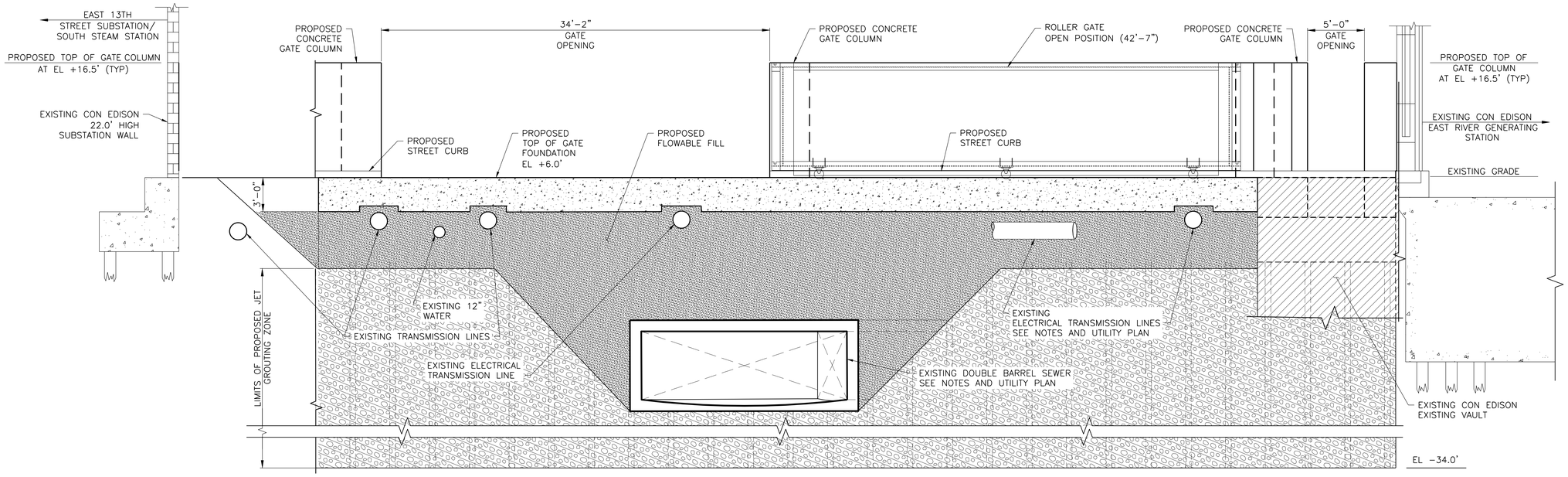

NOTE: PIPE PILES NOT SHOWN FOR CLARITY.

14TH STREET CROSSING – ELEVATION

SCALE: 1" = 50'

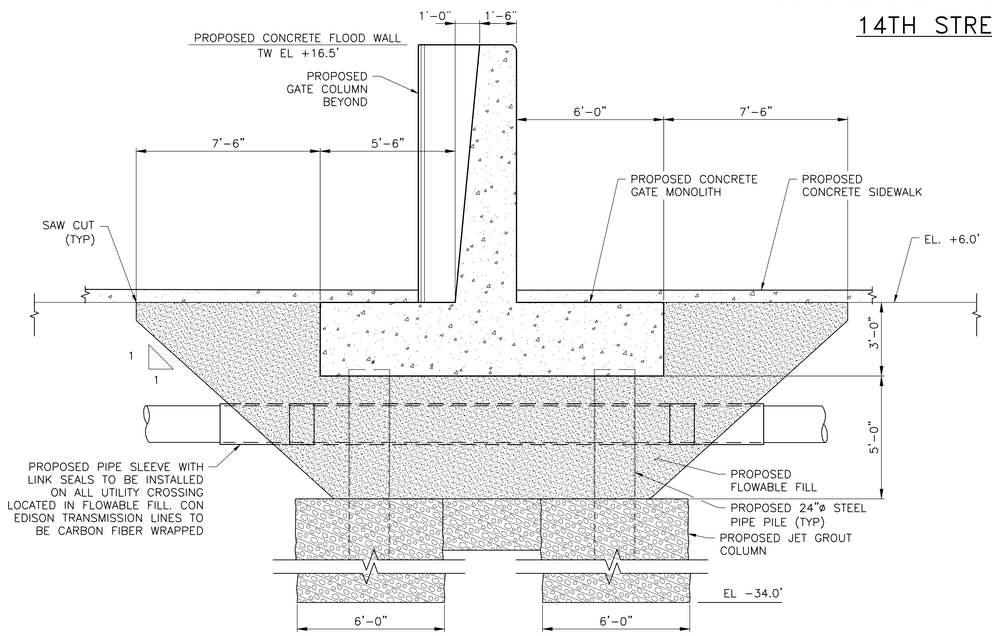

A FG300 SECTION
SCALE: 1" = 30'

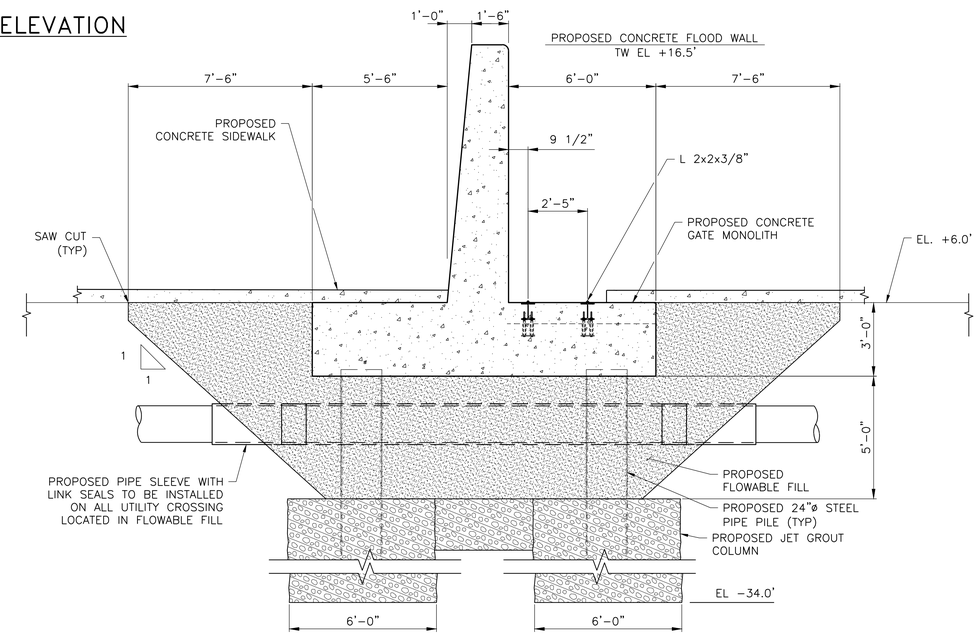

B FG300 SECTION
SCALE: 1" = 30'

CONCEPTUAL

SUBMITTED DATE: 1/31/2019

LEGEND:

- PROPOSED FLOWABLE FILL
- PROPOSED JET GROUT

TOPOGRAPHIC SURVEY PREPARED BY: FOR SURVEYOR INFORMATION SEE SURVEY SET SU100 DRAWINGS SERIES

NOTES:

1. ALL ITEMS CALLED OUT AS EXISTING ARE TO REMAIN UNLESS NOTED OTHERWISE.
2. JET GROUTING SHALL BE PERFORMED WITH THE TRIPLE FLUID SYSTEM.
3. THE MINIMUM UNCONFINED COMPRESSIVE DESIGN STRENGTH OF THE JET GROUT SHALL BE 500 PSI AT 3 DAYS AND 750 PSI AT 28 DAYS.
4. THE DESIGN PERMEABILITY OF THE JET GROUT SHALL BE LESS THAN 1.0 X 10^{-6} CM/SEC.
5. USE VERTICAL AND ANGLED SLEEVE PIPES AS REQUIRED TO PERFORM JET GROUTING AROUND AND BELOW THE UTILITY LINES.
6. PRIOR TO PERFORMING JET GROUTING AND DRIVING SHEET PILES AT/NEAR EACH UTILITY LINE CROSSING LOCATION, PRE-TRENCH EXCAVATION TO LOCATE/EXPOSE THE UTILITY LINE (THEN BACKFILLING) AS REQUIRED.
7. FOR EXISTING UTILITY LINES LOCATED WITHIN THE LIMITS OF PROPOSED SOIL IMPROVEMENTS, SEE UTILITY CROSSING TYPE A, B, C AND D.
8. 14TH STREET CANARSIE L- TUNNEL.
9. ALL SPOT ELEVATIONS ARE EXISTING ELEVATIONS IN NAVD88.
10. EXCAVATABLE FILL SHALL HAVE A COMPRESSIVE STRENGTH OF 100PSI.
11. UTILITIES ARE SHOWN FOR INFORMATION PURPOSES ONLY AND ARE NOT EXACT LOCATIONS. CONTRACTOR SHALL EXCAVATE A 4 FT DEEP 10 FT WIDE TRENCH TO IDENTIFY UTILITY TYPE, DEPTH AND DIMENSIONS PRIOR TO BEGINNING SOIL IMPROVEMENT WORK. SUBMIT DETAILS OF ALL SITE OBSERVED UTILITIES TO DDC DESIGN RESIDENT ENGINEER AND ENGINEER OF RECORD BEFORE BEGINNING WORK.
12. ALL ITEM CALLED OUT AS EXISTING ARE TO REMAIN UNLESS NOTED OTHERWISE.
13. SEE DRAWINGS XXX FOR ROADWAY, CURB AND SIDEWALK LAYOUT.
14. SEE FG302 FOR PILE AND MONOLITH LAYOUT.

NO.	DATE	DESCRIPTIONS	BY	APPR'D

REVISIONS

FINAL DESIGN SUBMITTED BY: AKRF KSE — The AKRF-KSE JV

FINAL DESIGN PREPARED BY: ch2m — CH2M HILL NEW YORK, INC. NAME OF CONSULTANT

SIGNATURE

DATE

CITY OF NEW YORK
DEPARTMENT OF DESIGN + CONSTRUCTION
DIVISION OF INFRASTRUCTURE
BUREAU OF DESIGN

CLOSURE STRUCTURES
14TH STREET CROSSING
ELEVATION AND SECTIONS

CH2M DRAWN BY

SANDRESM1-FG301-00.DWG CADD FILE

INSTALLATION OF
EAST SIDE COASTAL RESILIENCY
BOROUGH OF MANHATTAN

CAPITAL PROJECT NO. SANDRESM1 1/31/19

SHEET 212 OF 811

FG301

CONSULTANT DESIGN

CONCEPTUAL REDESIGN SUBMISSION 1/31/2019

CONCEPTUAL REDESIGN SUBMISSION 1/31/2019

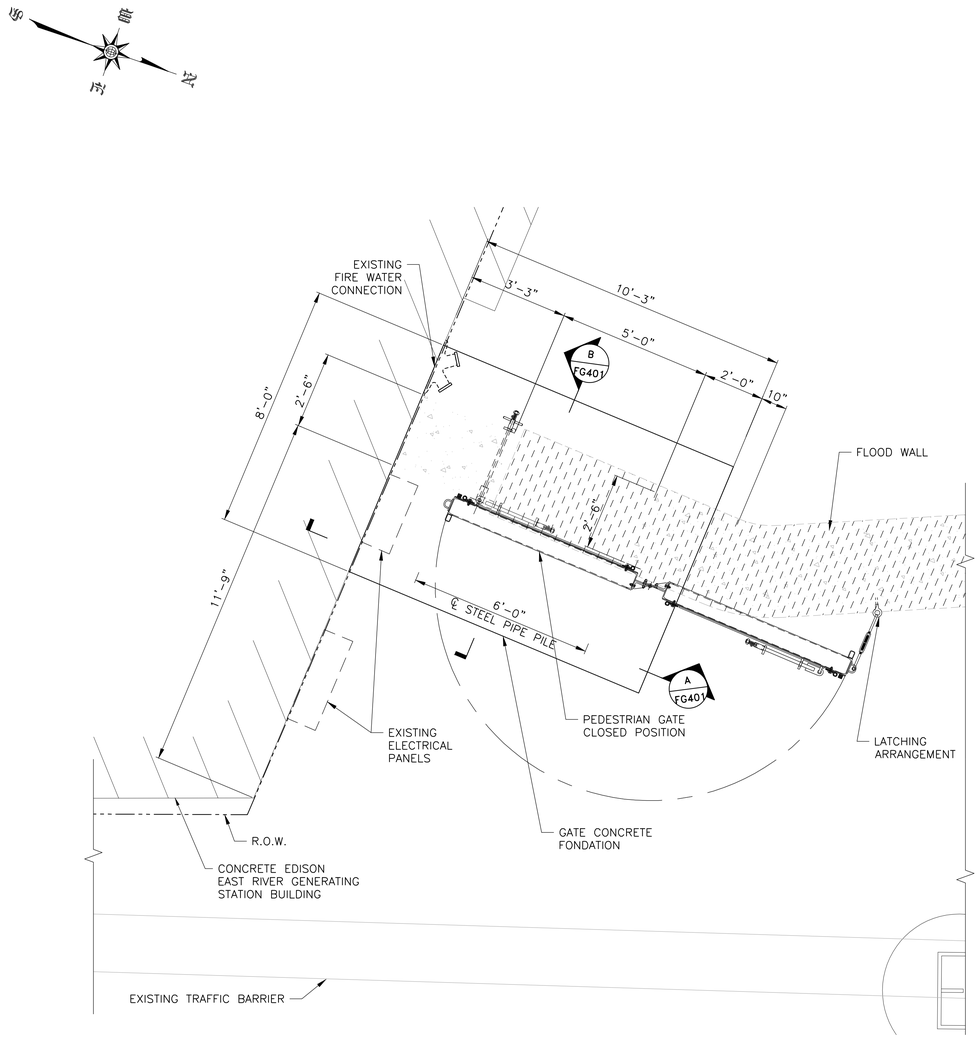

15TH STREET PEDESTRIAN SWING GATE FOUNDATION PLAN

SCALE: ½" = 1'-0"

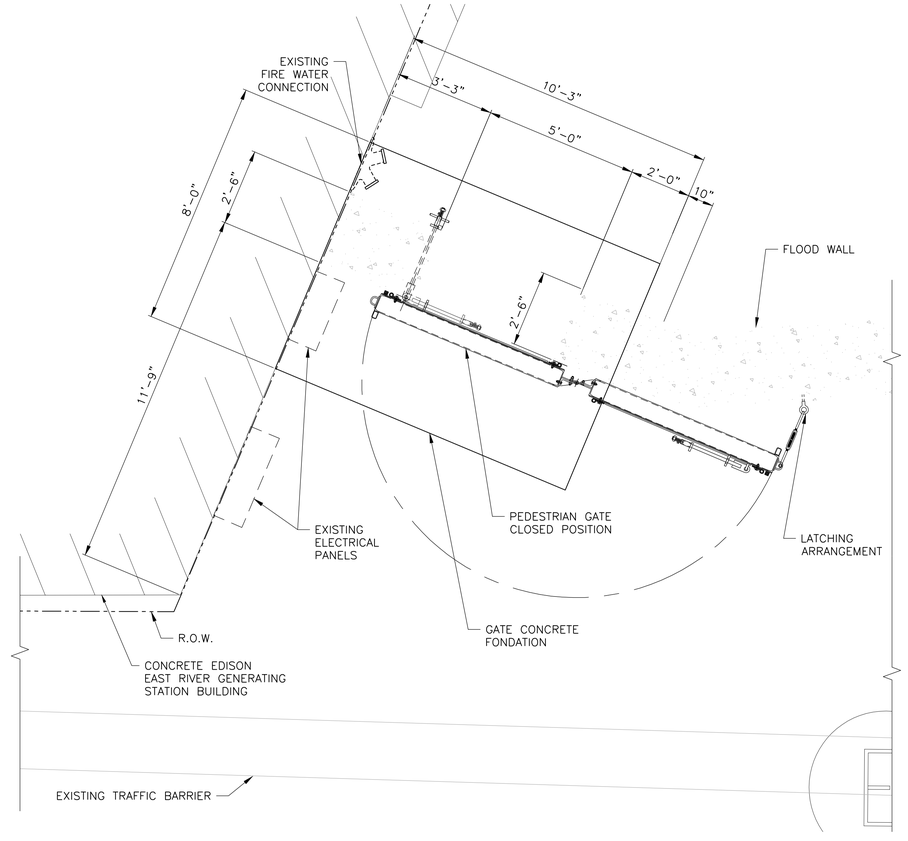

15TH STREET PEDESTRIAN SWING GATE PLAN

SCALE: ½" = 1'-0"

LEGEND:

JET GROUTING ZONE

NOTES:

1. ALL ITEMS CALLED OUT AS EXISTING ARE TO REMAIN UNLESS NOTED OTHERWISE.

CONCEPTUAL

SUBMITTED DATE: 1/31/2019

TOPOGRAPHIC SURVEY PREPARED BY: FOR SURVEYOR INFORMATION SEE SURVEY SET SU100 DRAWINGS SERIES

NO.	DATE	DESCRIPTIONS	BY	APPR'D

REVISIONS

FINAL DESIGN SUBMITTED BY: AKRF KSE — The AKRF-KSE JV

FINAL DESIGN PREPARED BY: ch2m — CH2M HILL NEW YORK, INC. NAME OF CONSULTANT

SIGNATURE

DATE

CITY OF NEW YORK
DEPARTMENT OF DESIGN + CONSTRUCTION
DIVISION OF INFRASTRUCTURE
BUREAU OF DESIGN

CLOSURE STRUCTURES
15TH STREET PEDESTRIAN SWING GATE
PLANS

CH2M — DRAWN BY

SANDRESM1-FG400-00.DWG — CADD FILE

INSTALLATION OF
EAST SIDE COASTAL RESILIENCY
BOROUGH OF MANHATTAN

CAPITAL PROJECT NO. SANDRESM1 1/31/19

SHEET 221 OF 811

FG400

CONSULTANT DESIGN

CONCEPTUAL REDESIGN SUBMISSION 1/31/2019

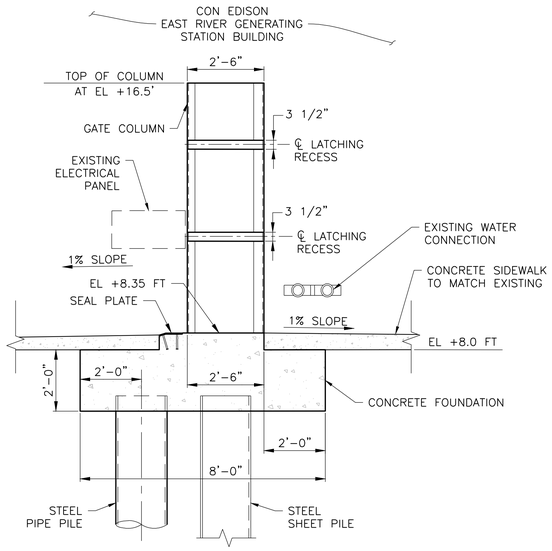

B FG400 SECTION
SCALE 1/2"=1'-0"

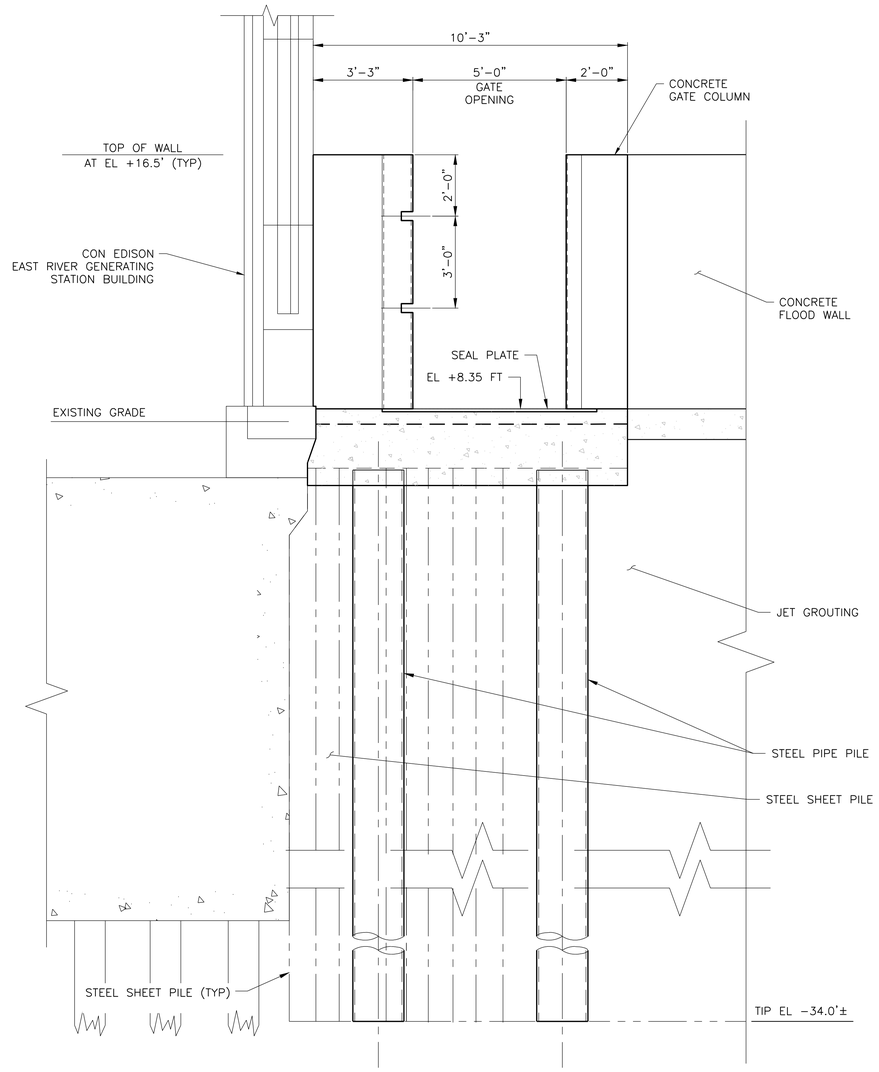

A FG400 SECTION
SCALE 1/2"=1'-0"

NOTES:

1. ALL ITEMS CALLED OUT AS EXISTING ARE TO REMAIN UNLESS NOTED OTHERWISE.

CONCEPTUAL

SUBMITTED DATE: 1/31/2019

NO.	DATE	DESCRIPTIONS	BY	APPR'D

REVISIONS

TOPOGRAPHIC SURVEY PREPARED BY: FOR SURVEYOR INFORMATION SEE SURVEY SET SU100 DRAWINGS SERIES

FINAL DESIGN SUBMITTED BY: AKRF KSE The AKRF-KSE JV

FINAL DESIGN PREPARED BY: ch2m: CH2M HILL NEW YORK, INC. NAME OF CONSULTANT

SIGNATURE

DATE

CITY OF NEW YORK
DEPARTMENT OF DESIGN + CONSTRUCTION
DIVISION OF INFRASTRUCTURE
BUREAU OF DESIGN

CLOSURE STRUCTURES
15TH STREET PEDESTRIAN SWING GATE
SECTIONS

CH2M DRAWN BY

SANDRESM1-FG401-00.DWG CADD FILE

INSTALLATION OF
EAST SIDE COASTAL RESILIENCY
BOROUGH OF MANHATTAN

CAPITAL PROJECT NO. SANDRESM1 1/31/19

SHEET 222 OF 811

FG401

CONSULTANT DESIGN

CONCEPTUAL REDESIGN SUBMISSION 1/31/2019

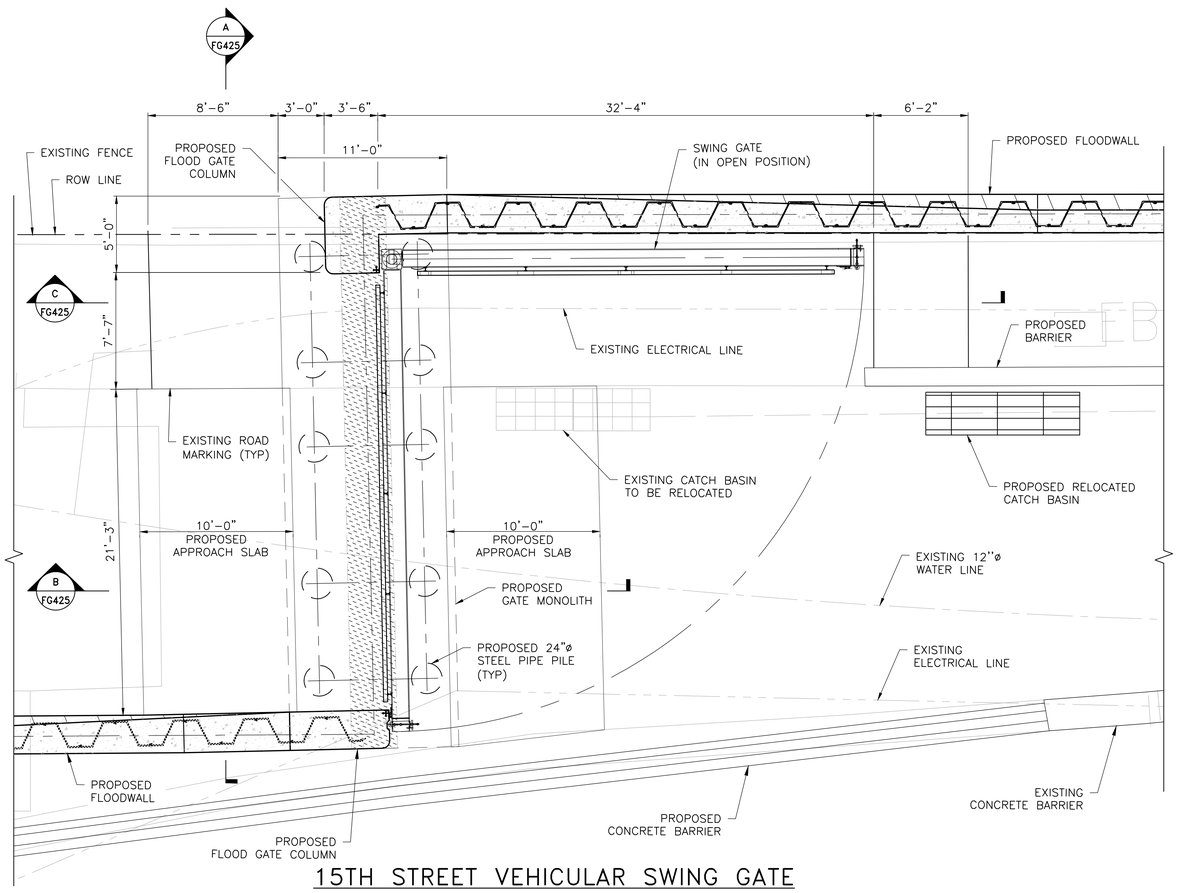

15TH STREET VEHICULAR SWING GATE PLAN

SCALE: ¼" = 1'-0"

LEGEND:

PROPOSED JET GROUTING ZONE

NOTES:

1. ALL ITEMS CALLED OUT AS EXISTING ARE TO REMAIN UNLESS NOTED OTHERWISE.
2. SEE DRAWINGS FG440, FG442, FG443, FG444, FG445, FG446, FG447, FG448 AND FG449 FOR STREET REGRADING.
3. SEE DRAWING FG426 FOR PILE AND MONOLITH LAYOUT.
4. SEE DRAWING XXXXX FOR ROAD STRIPING PLAN.
5. SEE DRAWINGS XXXXX FOR ROADWAY, CURB AND SIDEWALK LAYOUT.

CONCEPTUAL

SUBMITTED DATE: 1/31/2019

NO.	DATE	DESCRIPTIONS	BY	APPR'D

REVISIONS

TOPOGRAPHIC SURVEY PREPARED BY: FOR SURVEYOR INFORMATION SEE SURVEY SET SU100 DRAWINGS SERIES

FINAL DESIGN SUBMITTED BY: AKRF KSE — The AKRF-KSE JV

FINAL DESIGN PREPARED BY: ch2m — CH2M HILL NEW YORK, INC. NAME OF CONSULTANT — SIGNATURE — DATE

CITY OF NEW YORK
DEPARTMENT OF DESIGN + CONSTRUCTION
DIVISION OF INFRASTRUCTURE
BUREAU OF DESIGN

CLOSURE STRUCTURES
15TH STREET VEHICULAR SWING GATE
GENERAL PLAN

CH2M — DRAWN BY
SANDRESM1-FG420-00.DWG — CADD FILE

INSTALLATION OF
EAST SIDE COASTAL RESILIENCY
BOROUGH OF MANHATTAN

CAPITAL PROJECT NO. SANDRESM1 1/31/19

SHEET 223 OF 811

FG420

CONSULTANT DESIGN

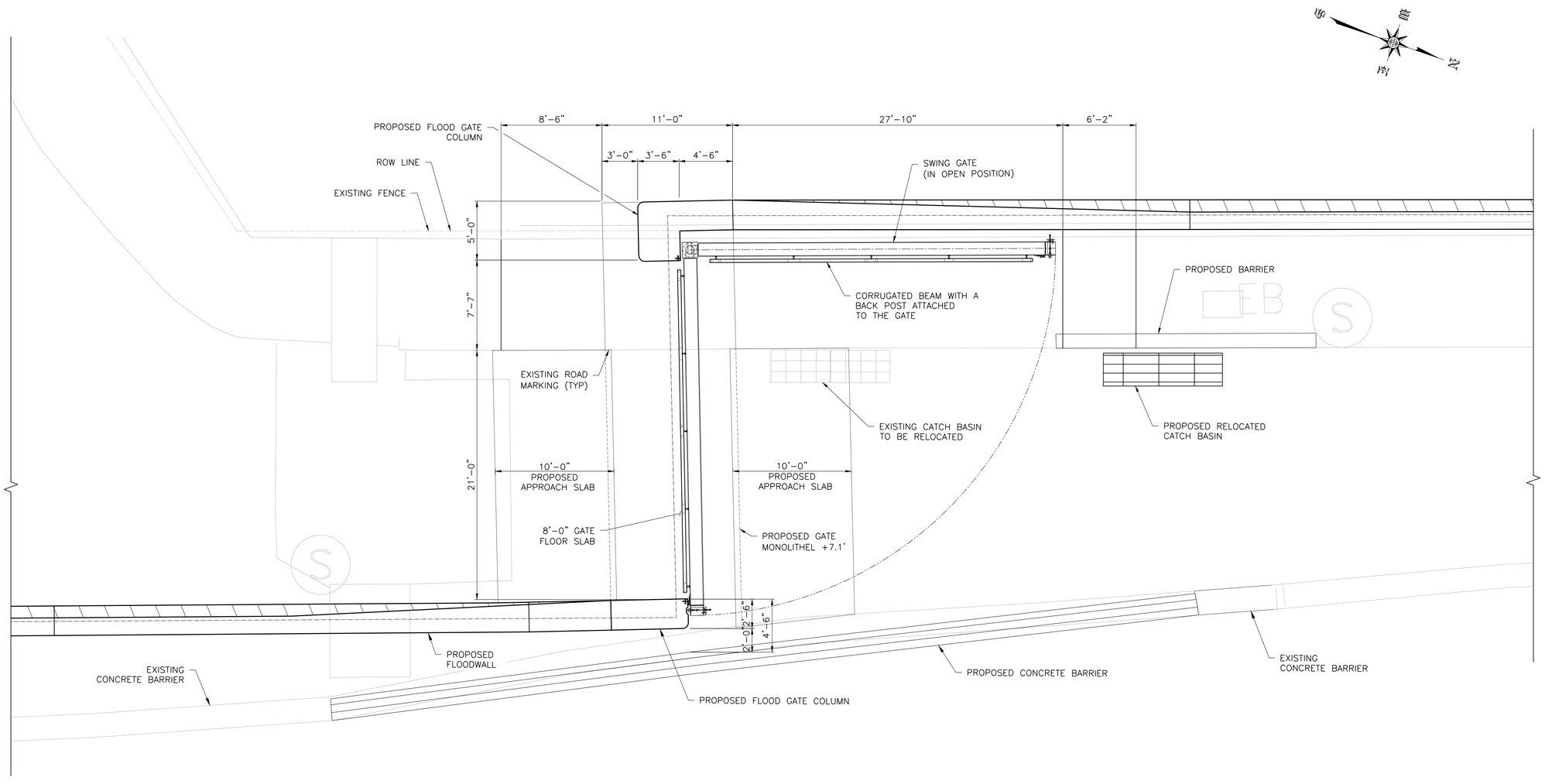

15TH STREET VEHICULAR SWING GATE PARTIAL PLAN

SCALE: ¼" = 1'-0"

NOTES:

1. ALL ITEMS CALLED OUT AS EXISTING ARE TO REMAIN UNLESS NOTED OTHERWISE.
2. SEE DRAWING FG440, FG442, FG443, FG444, FG445, FG446, FG447, FG448 AND FG449 FOR STREET REGRADING.
3. SEE DRAWING FG426 FOR PILE AND MONOLITH LAYOUT.
4. SEE DRAWING X FOR ROAD STRIPING PLAN.
5. SEE DRAWINGS X FOR ROADWAY, CURB AND SIDEWALK LAYOUT.

CONCEPTUAL

SUBMITTED DATE: 1/31/2019

CONCEPTUAL REDESIGN SUBMISSION 1/31/2019

TOPOGRAPHIC SURVEY PREPARED BY: FOR SURVEYOR INFORMATION SEE SURVEY SET SU100 DRAWINGS SERIES

NO.	DATE	DESCRIPTIONS	BY	APPR'D

REVISIONS

FINAL DESIGN SUBMITTED BY: AKRF KSE — The AKRF-KSE JV

FINAL DESIGN PREPARED BY: ch2m: — CH2M HILL NEW YORK, INC. NAME OF CONSULTANT

SIGNATURE

DATE

CITY OF NEW YORK
DEPARTMENT OF DESIGN + CONSTRUCTION
DIVISION OF INFRASTRUCTURE
BUREAU OF DESIGN

CLOSURE STRUCTURES
15TH STREET VEHICULAR SWING GATE
PARTIAL PLAN

CH2M — DRAWN BY

SANDRESM1-FG421-00.DWG — CADD FILE

INSTALLATION OF
EAST SIDE COASTAL RESILIENCY
BOROUGH OF MANHATTAN

CAPITAL PROJECT NO. SANDRESM1 1/31/19

SHEET 224 OF 811

FG421

CONSULTANT DESIGN

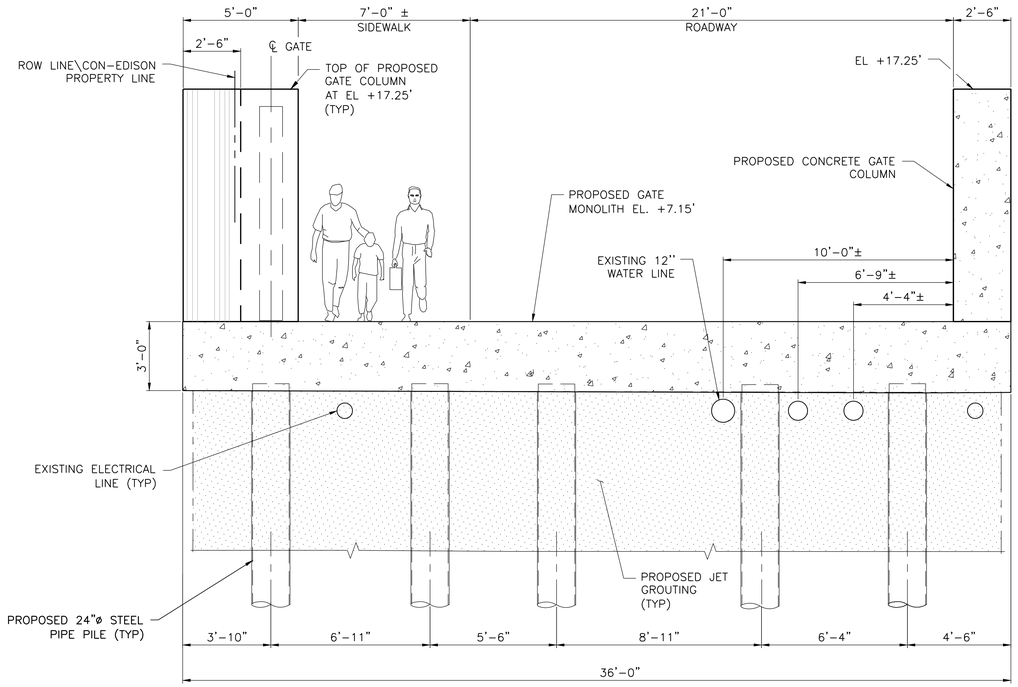

A FG420 SECTION
SCALE 3/8" = 1'-0"

NOTES:

1. ALL ITEMS CALLED OUT AS EXISTING ARE TO REMAIN UNLESS NOTED OTHERWISE.
2. SEE DRAWINGS FG440, FG442, FG443, FG444, FG445, FG446, FG447, FG448, FG449 FOR STREET REGRADING.
3. SEE DRAWING FG426 FOR PILE AND MONOLITH LAYOUT.
4. SEE DRAWING XXXXX FOR ROAD STRIPING PLAN.

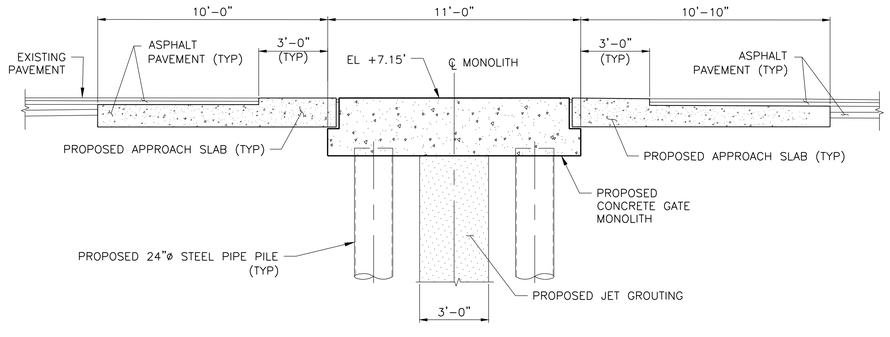

B FG420 SECTION
SCALE 3/8" = 1'-0"

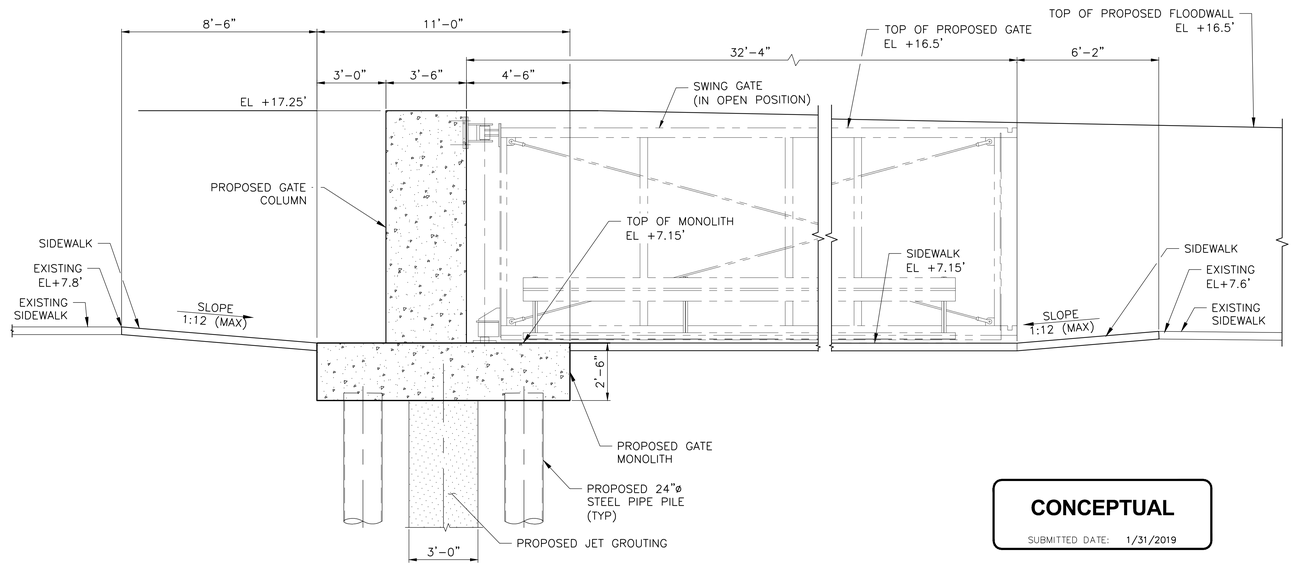

C FG420 SECTION
SCALE 3/8" = 1'-0"

CONCEPTUAL

SUBMITTED DATE: 1/31/2019

CONCEPTUAL REDESIGN SUBMISSION 1/31/2019

TOPOGRAPHIC SURVEY PREPARED BY: FOR SURVEYOR INFORMATION SEE SURVEY SET SU100 DRAWINGS SERIES

NO.	DATE	DESCRIPTIONS	BY	APPR'D

REVISIONS

FINAL DESIGN SUBMITTED BY: AKRF KSE — The AKRF-KSE JV

FINAL DESIGN PREPARED BY: ch2m — CH2M HILL NEW YORK, INC. NAME OF CONSULTANT

SIGNATURE

DATE

CITY OF NEW YORK
DEPARTMENT OF DESIGN + CONSTRUCTION
DIVISION OF INFRASTRUCTURE
BUREAU OF DESIGN

CLOSURE STRUCTURES
15TH STREET VEHICULAR SWING GATE SECTIONS

CH2M DRAWN BY

SANDRESM1-FG456-00.DWG CADD FILE

INSTALLATION OF
EAST SIDE COASTAL RESILIENCY
BOROUGH OF MANHATTAN

CAPITAL PROJECT NO. SANDRESM1 1/31/19

SHEET 225 OF 811

FG425

CONSULTANT DESIGN

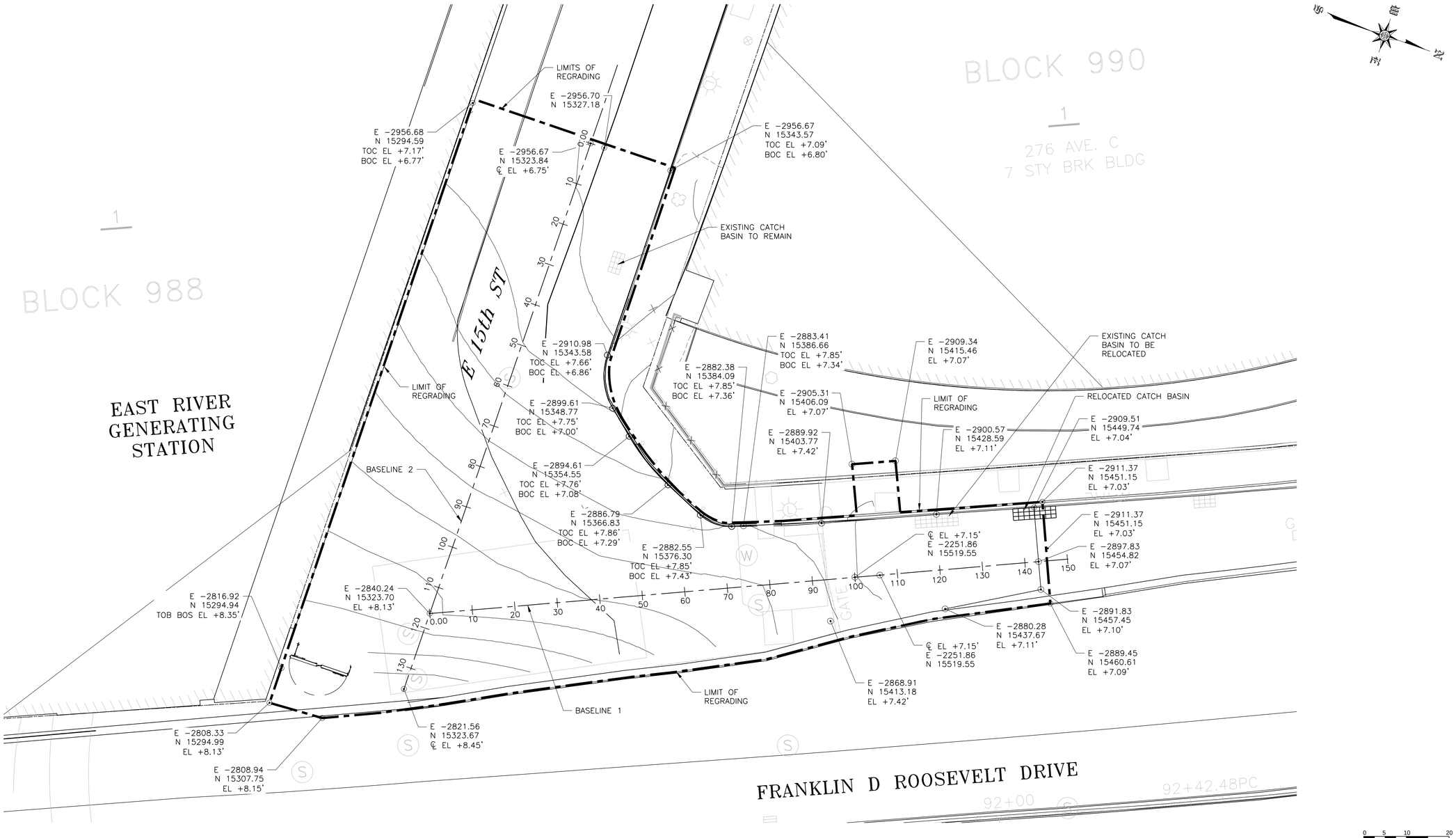

15TH STREET GATES
REGRADING OVERALL PLAN

SCALE: 1" = 10'

0 5 10 20
SCALE: 1" = 10'

LEGEND

TOC	TOP OF CURB
BOC	BOTTOM OF CURB
TOS	TOP OF SIDEWALK
BOS	BACK OF SIDEWALK
CL	ROAD CENTERLINE/CROWN

CONCEPTUAL

SUBMITTED DATE: 1/31/2019

CONCEPTUAL REDESIGN SUBMISSION 1/31/2019

TOPOGRAPHIC SURVEY PREPARED BY: FOR SURVEYOR INFORMATION SEE SURVEY SET SU100 DRAWINGS SERIES

NO.	DATE	DESCRIPTIONS	BY	APPR'D

REVISIONS

FINAL DESIGN SUBMITTED BY: AKRF KSE — The AKRF-KSE JV

FINAL DESIGN PREPARED BY: ch2m — CH2M HILL NEW YORK, INC. NAME OF CONSULTANT

SIGNATURE

DATE

CITY OF NEW YORK
DEPARTMENT OF DESIGN + CONSTRUCTION
DIVISION OF INFRASTRUCTURE
BUREAU OF DESIGN

CLOSURE STRUCTURES
15TH STREET GATES
REGRADING OVERALL PLAN

CH2M DRAWN BY

SANDRESM1-FG440-00.SHEET CADD FILE

INSTALLATION OF
EAST SIDE COASTAL RESILIENCY
BOROUGH OF MANHATTAN

CAPITAL PROJECT NO. SANDRESM1 1/31/19

SHEET 232 OF 811

FG440

CONSULTANT DESIGN

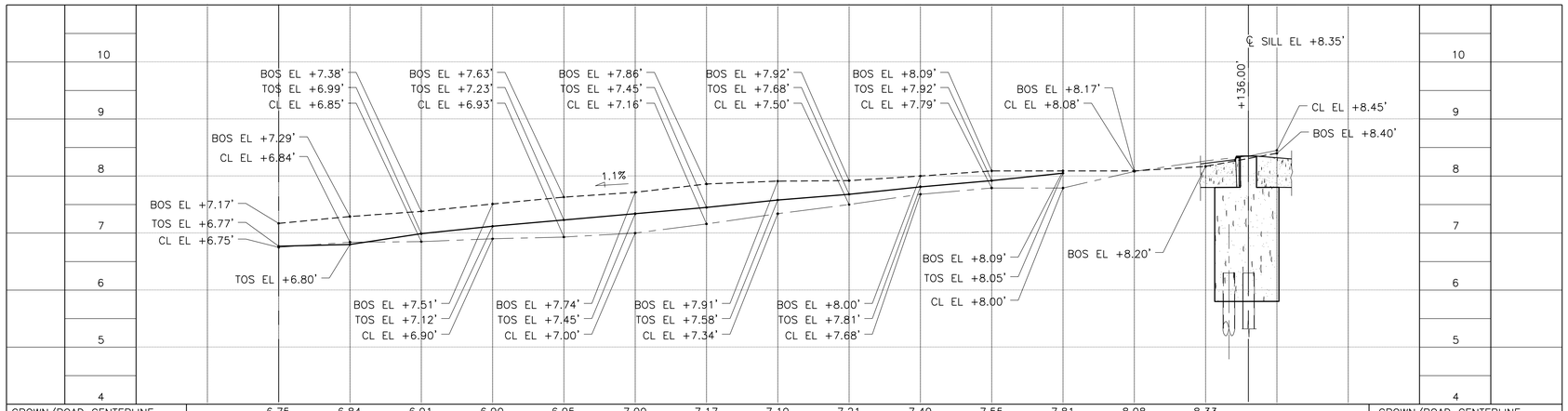

CROWN/ROAD CENTERLINE		6.75	6.84	6.91	6.90	6.95	7.00	7.17	7.19	7.21	7.49	7.55	7.81	8.08	8.33			CROWN/ROAD CENTERLINE
EXISTING TOP OF SIDEWALK		6.77	6.80	6.83	6.87	6.90	6.92	6.94	6.95	6.97	7.07	7.32	7.58	7.83	8.08	8.23 8.33		EXISTING TOP OF SIDEWALK
EXISTING BACK OF SIDEWALK		7.09	7.21	7.32	7.43	7.55	7.67	7.76	7.84	7.85	8.08	7.94	7.89	7.87				EXISTING BACK OF SIDEWALK
DISTANCE	−10	0	+10	+20	+30	+40	+50	+60	+70	+80	+90	+100	+110	+120	+130	+140	+150	DISTANCE

PROFILE ALONG 15TH STREET– SOUTH SIDE (BASELINE 2)

HORIZ. SCALE 1/8" = 1'-0", VERT. SCALE 1" = 1'-0"

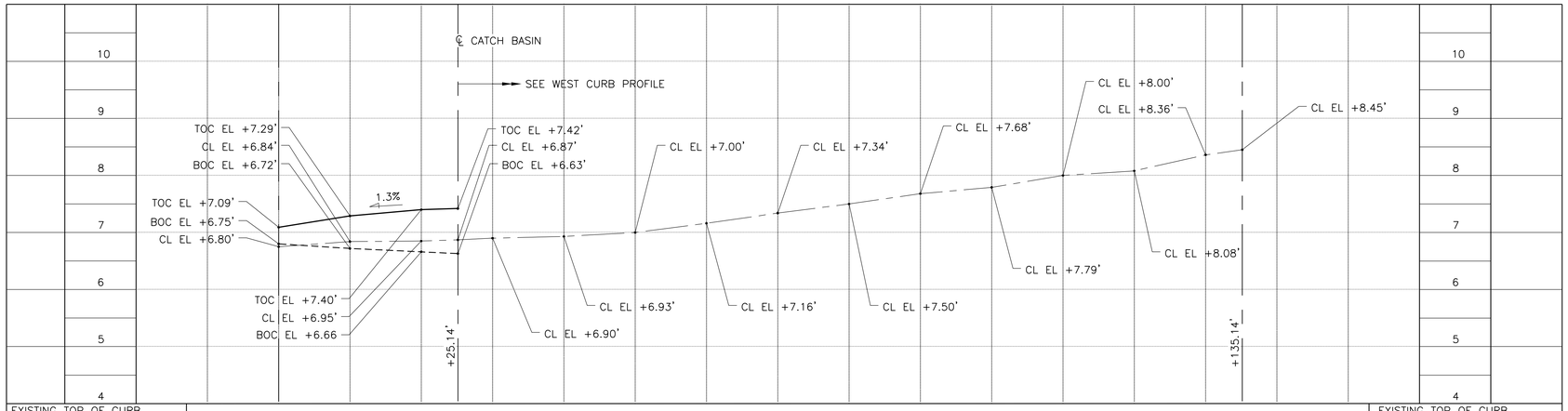

EXISTING TOP OF CURB																		EXISTING TOP OF CURB
EXISTING CL/CROWN OF ROAD		6.75	6.84	6.91	6.90	6.95	7.00	7.17	7.19	7.21	7.49	7.55	7.81	8.08	8.33			EXISTING CL/CROWN OF ROAD
EXISTING BOTTOM OF CURB		6.80	6.83	6.87														EXISTING BOTTOM OF CURB
DISTANCE	−10	0	+10	+20	+30	+40	+50	+60	+70	+80	+90	+100	+110	+120	+130	+140	+150	DISTANCE

PROFILE ALONG 15TH STREET– NORTH SIDE (BASELINE 2)

HORIZ. SCALE 1/8" = 1'-0", VERT. SCALE 1" = 1'-0"

LEGEND

- TOP OF CURB (TOC) / TOP OF SIDEWALK (TOS)
- CROWN/ CL OF ROAD (CL)
- BOTTOM OF CURB (BOC) / BACK OF SIDEWALK (BOS)
- CL — CENTERLINE

CONCEPTUAL

SUBMITTED DATE: 1/31/2019

CONCEPTUAL REDESIGN SUBMISSION 1/31/2019

TOPOGRAPHIC SURVEY PREPARED BY: FOR SURVEYOR INFORMATION SEE SURVEY SET SU100 DRAWINGS SERIES

NO.	DATE	DESCRIPTIONS	BY	APPR'D

REVISIONS

FINAL DESIGN SUBMITTED BY: AKRF KSE — The AKRF-KSE JV

FINAL DESIGN PREPARED BY: ch2m — CH2M HILL NEW YORK, INC. NAME OF CONSULTANT

SIGNATURE

DATE

CITY OF NEW YORK
DEPARTMENT OF DESIGN + CONSTRUCTION
DIVISION OF INFRASTRUCTURE
BUREAU OF DESIGN

CLOSURE STRUCTURES
15TH STREET GATES REGRADING PROFILES
SHEET 1 OF 2

CH2M — DRAWN BY
SANDRESM1-FG442-00.DWG — CADD FILE

INSTALLATION OF
EAST SIDE COASTAL RESILIENCY
BOROUGH OF MANHATTAN

CAPITAL PROJECT NO. SANDRESM1 1/31/19

SHEET 233 OF 811

FG442

CONSULTANT DESIGN

CONCEPTUAL REDESIGN SUBMISSION 1/31/2019

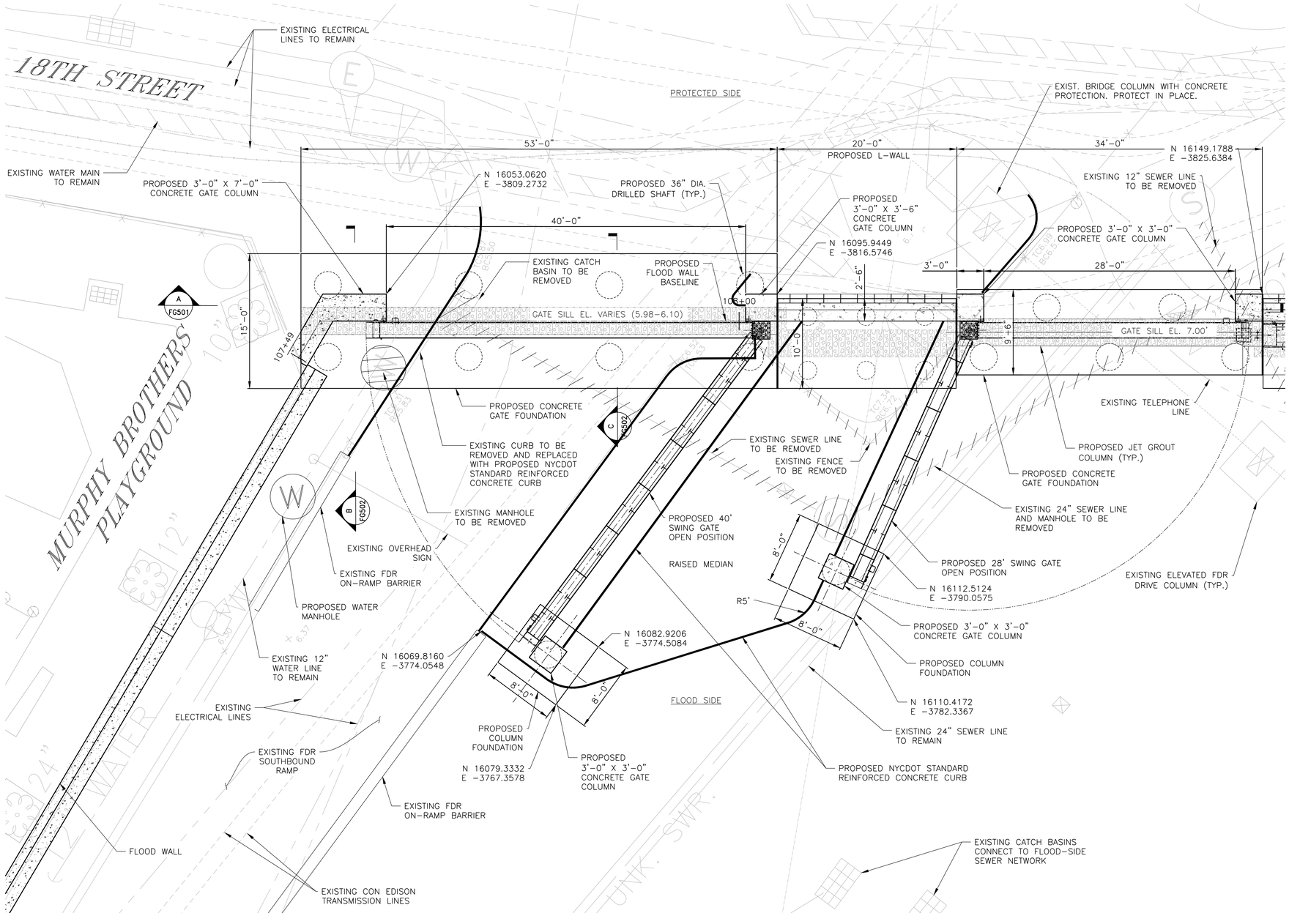

NOTES:

1. ALL ITEMS CALLED OUT AS EXISTING ARE TO REMAIN UNLESS NOTED OTHERWISE.
2. SEE SHEET SRXXX FOR STREET RESTORATION AND CURB GEOMETRY.
3. SEE SHEET PMP313 FOR PAVEMENT MARKINGS.
4. SEE SHEETS FG505 & FG506 FOR CONCRETE GATE FOUNDATION STRUCTURAL DETAILS.
5. SEE SHEET FG510 FOR PILE LAYOUT AND SCHEDULE.
6. SEE SHEETS FG507 TO FG509 FOR STRUCTURAL GATE DETAILS.

EAST 18TH STREET FDR ON RAMP & OCME GATE PLAN

CONCEPTUAL

SUBMITTED DATE: 1/31/2019

0 5 10
SCALE: 1" = 5'

NO.	DATE	DESCRIPTIONS	BY	APPR'D

REVISIONS

FINAL DESIGN SUBMITTED BY: AKRF KSE — The AKRF-KSE JV

FINAL DESIGN PREPARED BY: ARCADIS — ARCADIS OF NEW YORK, INC. NAME OF CONSULTANT — SIGNATURE — DATE

CITY OF NEW YORK
DEPARTMENT OF DESIGN + CONSTRUCTION
DIVISION OF INFRASTRUCTURE
BUREAU OF DESIGN

CLOSURE STRUCTURES
EAST 18TH STREET FDR ON RAMP & OCME GATE PLAN

ARCADIS — DRAWN BY
SANDRESM1-FG500-00 — CADD FILE

INSTALLATION OF
EAST SIDE COASTAL RESILIENCY
BOROUGH OF MANHATTAN

CAPITAL PROJECT NO. SANDRESM1 1/31/19 — SHEET 232 OF 790 — FG500

CONSULTANT DESIGN

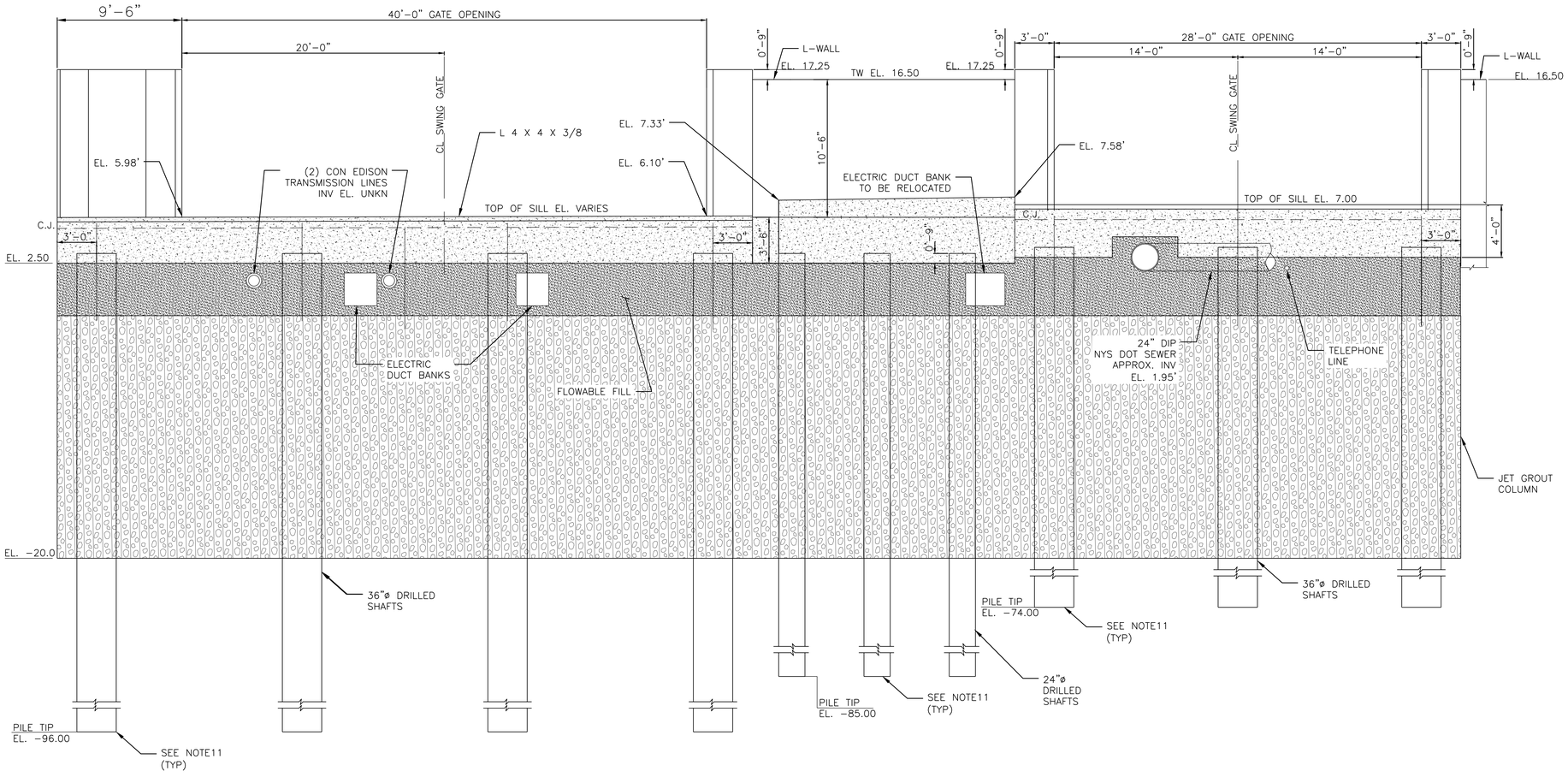

EAST 18TH STREET FDR ON RAMP AND OCME GATE PROTECTED SIDE ELEVATION

SCALE: ⅜" = 1'-0"

CONCEPTUAL REDESIGN SUBMISSION 1/31/2019

LEGEND:

- FLOWABLE FILL
- JET GROUT

NOTES:

1. JET GROUTING SHALL BE PERFORMED WITH THE TRIPLE FLUID SYSTEM.
2. THE MINIMUM UNCONFINED COMPRESSIVE DESIGN STRENGTH OF THE SOILCRETE SHALL BE 500 PSI AT 3 DAYS AND 750 PSI AT 28 DAYS.
3. THE DESIGN PERMEABILITY OF THE SOILCRETE SHALL BE LESS THAN 1.0 X 10^{-6} CM/SEC.
4. USE VERTICAL AND ANGLED SLEEVE PIPES AS REQUIRED TO PERFORM JET GROUTING AROUND AND BELOW THE UTILITY LINES.
5. PRIOR TO PERFORMING JET GROUTING AND DRIVING SHEET PILES AT/NEAR EACH UTILITY LINE CROSSING LOCATION, PRE-TRENCH EXCAVATION TO LOCATE/EXPOSE THE UTILITY LINE (THEN BACKFILLING) AS REQUIRED.
6. FOR EXISTING UTILITY LINES LOCATED WITHIN THE LIMITS OF PROPOSED SOIL IMPROVEMENTS, SEE UTILITY CROSSING TYPE A, B, C AND D.
7. 14TH STREET CANARSIE L- TUNNEL.
8. ALL SPOT ELEVATIONS ARE EXISTING ELEVATIONS IN NAVD88.
9. EXCAVATABLE FILL SHALL HAVE A COMPRESSIVE STRENGTH OF 100PSI.
10. UTILITIES ARE SHOWN FOR INFORMATION PURPOSES ONLY AND ARE NOT EXACT LOCATIONS. CONTRACTOR SHALL EXCAVATE A 4 FT DEEP 10 FT WIDE TRENCH TO IDENTIFY UTILITY TYPE, DEPTH AND DIMENSIONS PRIOR TO BEGINNING SOIL IMPROVEMENT WORK. SUBMIT DETAILS OF ALL SITE OBSERVED UTILITIES TO THE CLIENT BEFORE BEGINNING WORK.
11. ALL PILES TIP ELEVATION SHOULD BE AT RESPECTIVE LEVEL OR TILL TO THE BED ROCK LEVEL.

CONCEPTUAL

SUBMITTED DATE: 1/31/2019

TOPOGRAPHIC SURVEY PREPARED BY: FOR SURVEYOR INFORMATION SEE SURVEY SET SU100 DRAWINGS SERIES

NO.	DATE	DESCRIPTIONS	BY	APPR'D
				REVAPP1

REVISIONS

FINAL DESIGN SUBMITTED BY: AKRF KSE — The AKRF-KSE JV

FINAL DESIGN PREPARED BY: ARCADIS — ARCADIS OF NEW YORK, INC. NAME OF CONSULTANT

SIGNATURE

DATE

CITY OF NEW YORK
DEPARTMENT OF DESIGN + CONSTRUCTION
DIVISION OF INFRASTRUCTURE
BUREAU OF DESIGN

CLOSURE STRUCTURES
MURPHY BROTHERS AND OCME SWING GATE ELEVATION

ARCADIS DRAWN BY

SANDRESM1-FG501-00 CADD FILE

INSTALLATION OF
EAST SIDE COASTAL RESILIENCY
BOROUGH OF MANHATTAN

CAPITAL PROJECT NO. SANDRESM1 1/31/19

SHEET 254 OF 811

FG501

CONSULTANT DESIGN

CONCEPTUAL REDESIGN SUBMISSION 1/31/2019

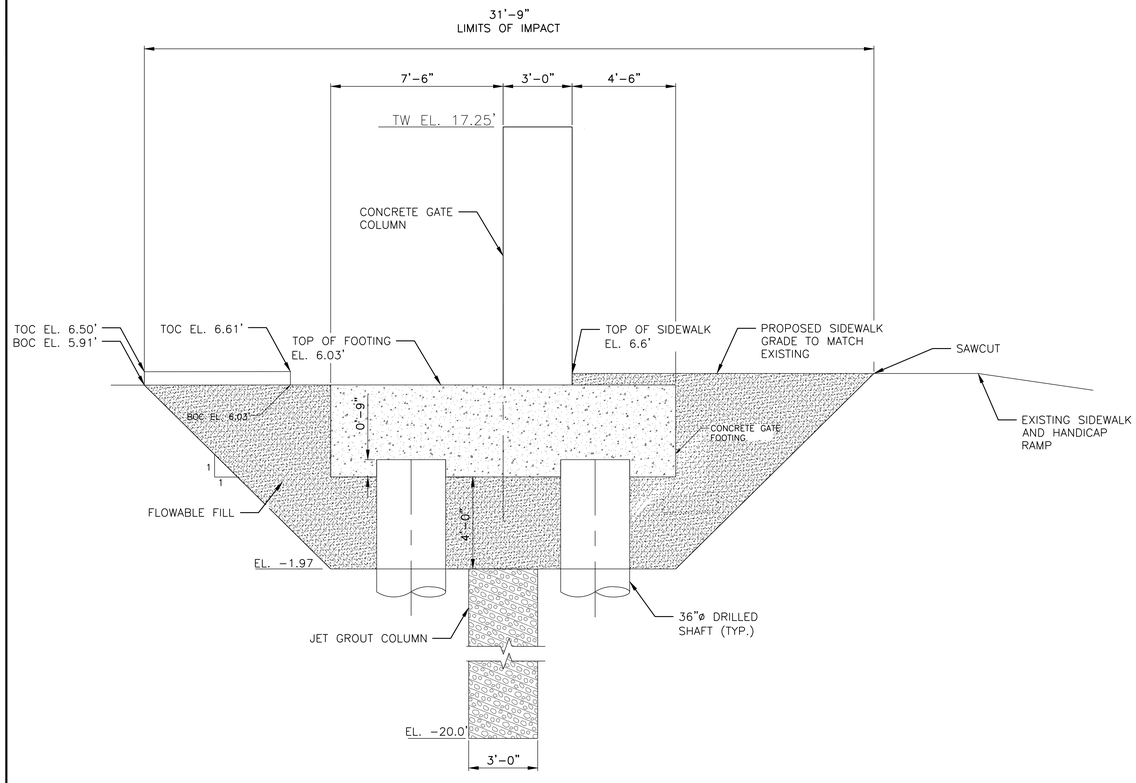

SECTION THROUGH SIDEWALK AT SOUTH END OF FDR ON RAMP

B FG500 SCALE 1/2" = 1'-0"

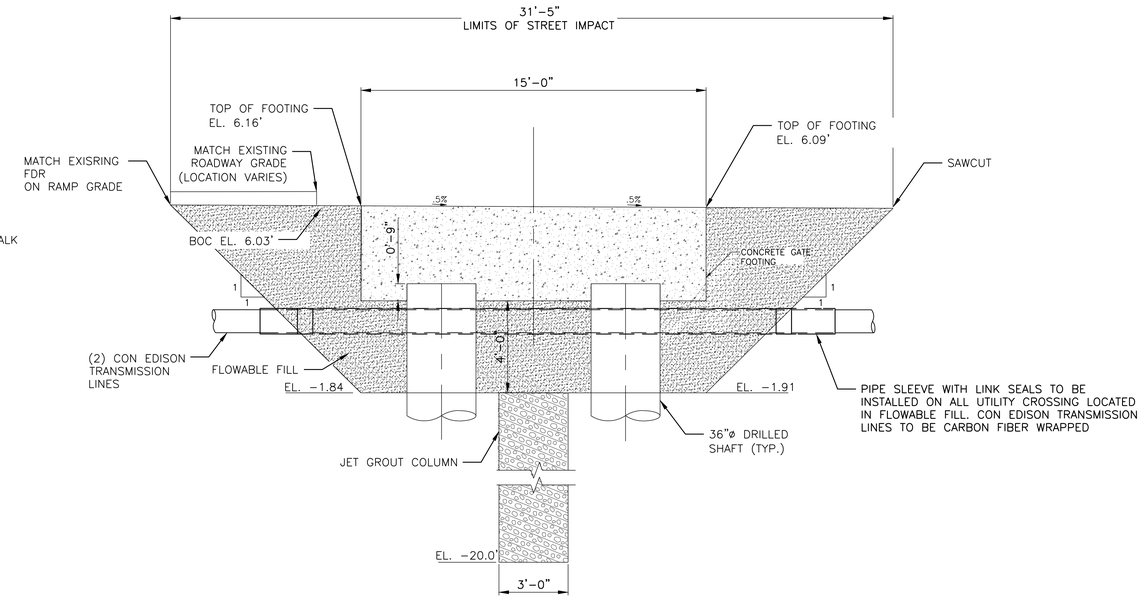

SECTION THROUGH GATE FOOTING AT FDR ON RAMP

C FG500 SCALE 1/2" = 1'-0"

CONCEPTUAL

SUBMITTED DATE: 1/31/2019

NOTES:

1. SEE DWG FG503 AND FG504 FOR REGRADING PLAN AND PROFILE.

TOPOGRAPHIC SURVEY PREPARED BY: FOR SURVEYOR INFORMATION SEE SURVEY SET SU100 DRAWINGS SERIES

NO.	DATE	DESCRIPTIONS	BY	APPR'D

REVISIONS

FINAL DESIGN SUBMITTED BY: AKRF KSE The AKRF-KSE JV

FINAL DESIGN PREPARED BY: ARCADIS ARCADIS OF NEW YORK, INC. NAME OF CONSULTANT

SIGNATURE

DATE

CITY OF NEW YORK
DEPARTMENT OF DESIGN + CONSTRUCTION
DIVISION OF INFRASTRUCTURE
BUREAU OF DESIGN

CLOSURE STRUCTURES
EAST 18TH STREET FDR ON RAMP & OCME GATE SECTIONS

ARCADIS DRAWN BY

SANDRESM1-FG502-00.DWG CADD FILE

INSTALLATION OF
EAST SIDE COASTAL RESILIENCY
BOROUGH OF MANHATTAN

CAPITAL PROJECT NO. SANDRESM1 1/31/19

SHEET 255 OF 811

FG502

CONSULTANT DESIGN

CONCEPTUAL REDESIGN SUBMISSION 1/31/2019

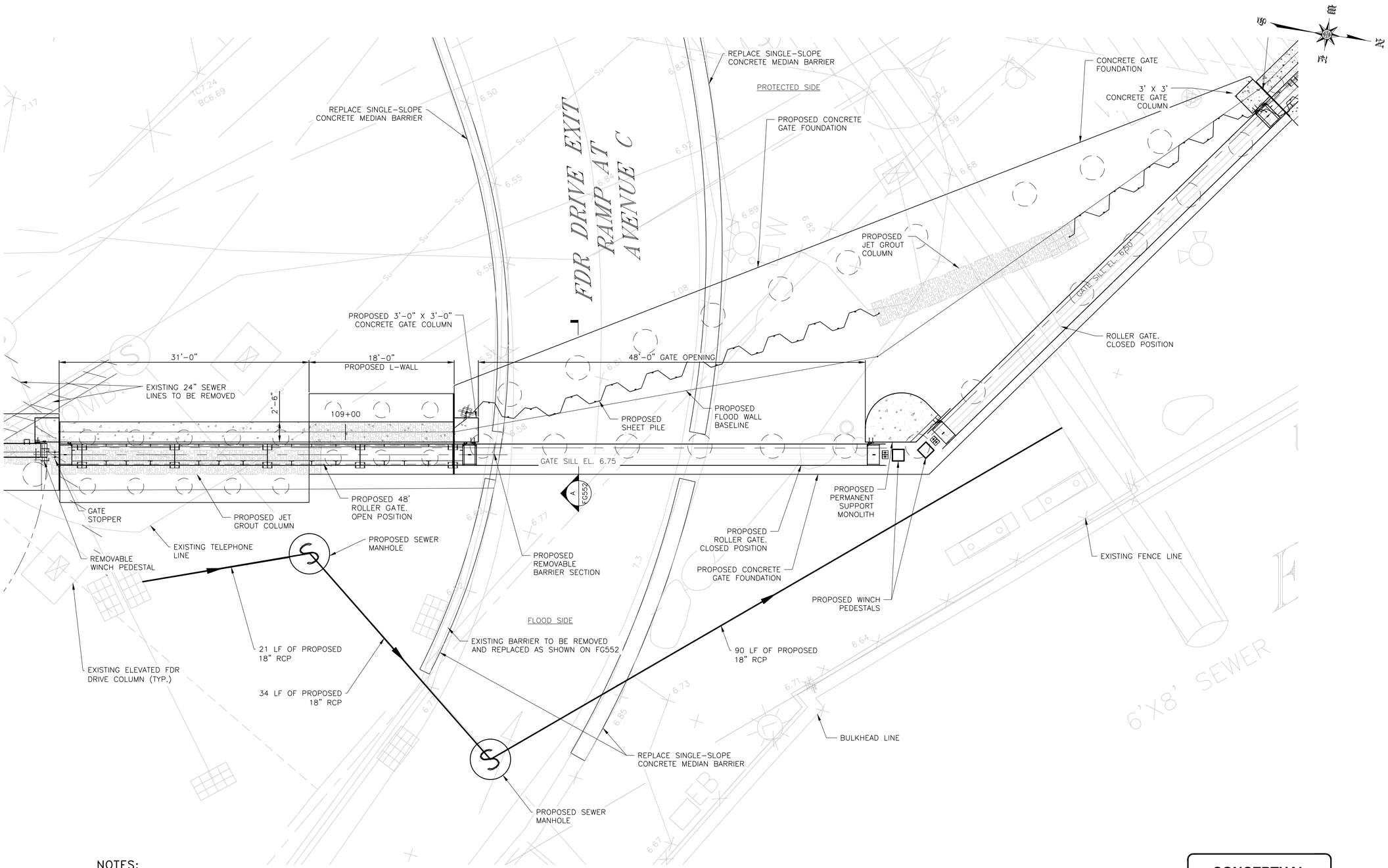

NOTES:

1. ALL ITEMS CALLED OUT AS EXISTING ARE TO REMAIN UNLESS NOTED OTHERWISE.
2. SEE SHEET SRXXX FOR STREET RESTORATION AND CURB GEOMETRY.
3. SEE SHEET PMP313 FOR PAVEMENT MARKINGS.
4. SEE SHEETS FG606 TO FG608 FOR CONCRETE GATE FOUNDATION STRUCTURAL DETAILS.
5. SEE SHEET FG613 FOR PILE LAYOUT AND SCHEDULE.
6. SEE SHEETS FG609 & FG610 FOR STRUCTURAL GATE DETAILS.

TOPOGRAPHIC SURVEY PREPARED BY: FOR SURVEYOR
INFORMATION SEE SURVEY SET SU100 DRAWINGS SERIES

EAST 18TH STREET FDR EXIT GATE PLAN

SCALE: 1" = 5'

CONCEPTUAL

SUBMITTED DATE: 1/31/2019

NO.	DATE	DESCRIPTIONS	BY	APPR'D

REVISIONS

FINAL DESIGN SUBMITTED BY: AKRF KSE — The AKRF-KSE JV

FINAL DESIGN PREPARED BY: ARCADIS — ARCADIS OF NEW YORK, INC. — NAME OF CONSULTANT — SIGNATURE — DATE

CITY OF NEW YORK
DEPARTMENT OF DESIGN + CONSTRUCTION
DIVISION OF INFRASTRUCTURE
BUREAU OF DESIGN

CLOSURE STRUCTURES
EAST 18TH STREET FDR EXIT GATE PLAN

ARCADIS — DRAWN BY
SANDRESM1-FG550-00.DWG — CADD FILE

INSTALLATION OF
EAST SIDE COASTAL RESILIENCY
BOROUGH OF MANHATTAN

CAPITAL PROJECT NO. SANDRESM1 1/31/19 — SHEET 269 OF 811 — FG550

CONSULTANT DESIGN

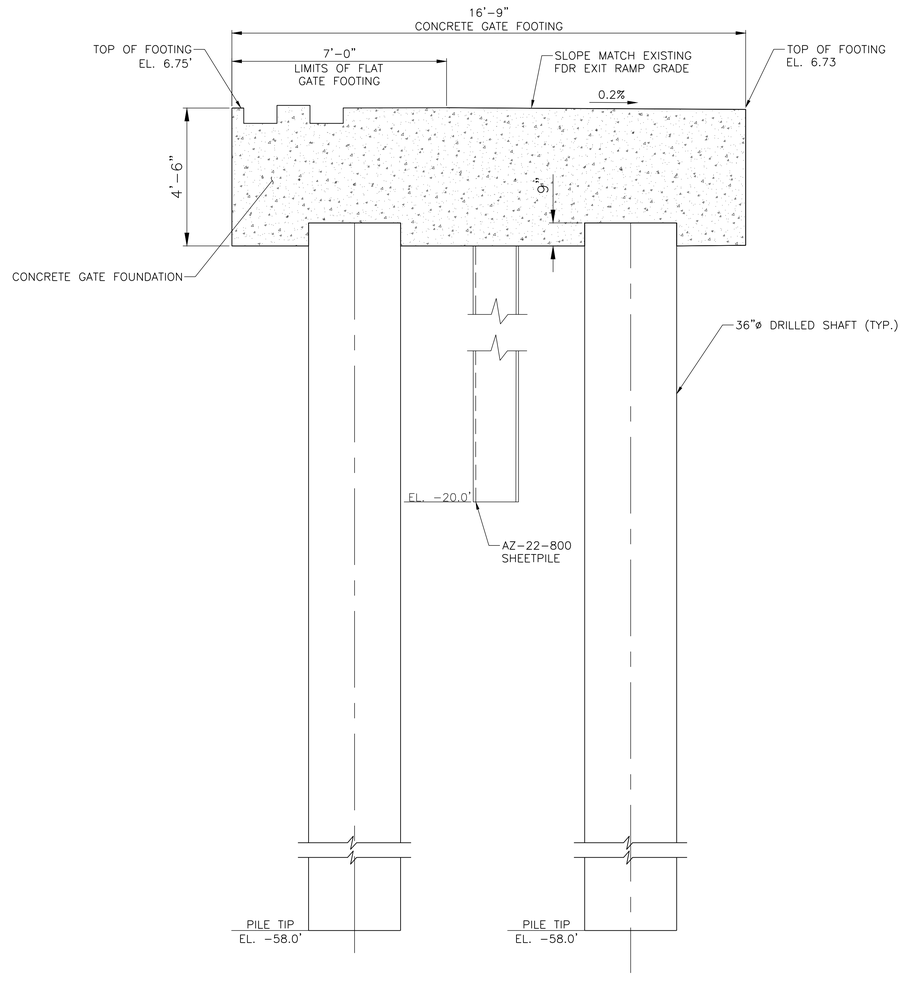

A
FG550

SECTION THROUGH FDR EXIT GATE

SCALE 1/2" = 1'-0"

CONCEPTUAL

SUBMITTED DATE: 1/31/2019

NO.	DATE	DESCRIPTIONS	BY	APPR'D

REVISIONS

TOPOGRAPHIC SURVEY PREPARED BY: FOR SURVEYOR
INFORMATION SEE SURVEY SET SU100 DRAWINGS SERIES

FINAL DESIGN SUBMITTED BY:
AKRF KSE
The AKRF-KSE JV

FINAL DESIGN PREPARED BY:
ARCADIS
ARCADIS OF NEW YORK, INC.
NAME OF CONSULTANT

SIGNATURE

DATE

CITY OF NEW YORK
DEPARTMENT OF DESIGN + CONSTRUCTION
DIVISION OF INFRASTRUCTURE
BUREAU OF DESIGN

CLOSURE STRUCTURES
FDR EXIT GATE
SECTION

ARCADIS
DRAWN BY

SANDRESM1-FG551-00.DWG
CADD FILE

INSTALLATION OF
EAST SIDE COASTAL RESILIENCY
BOROUGH OF MANHATTAN

CAPITAL PROJECT NO. SANDRESM1 1/31/19

SHEET 270 OF 811

FG551

CONSULTANT DESIGN

CONCEPTUAL REDESIGN SUBMISSION 1/31/2019

CONCEPTUAL REDESIGN SUBMISSION 1/31/2019

CURVE C1A
R=90.00'
Δ =55°37'02.28"
L =87.36
T = 47.47'

CURVE C1
P.I. STA. 1+10.62
P.I. OFF. = 17.38' RT
R=100.00'
Δ =63°09'21.33"
L =110.23
T = 61.47'

CURVE C1B
R=125.00'
Δ =58°13'11.64"
L =127.02
T = 69.60'

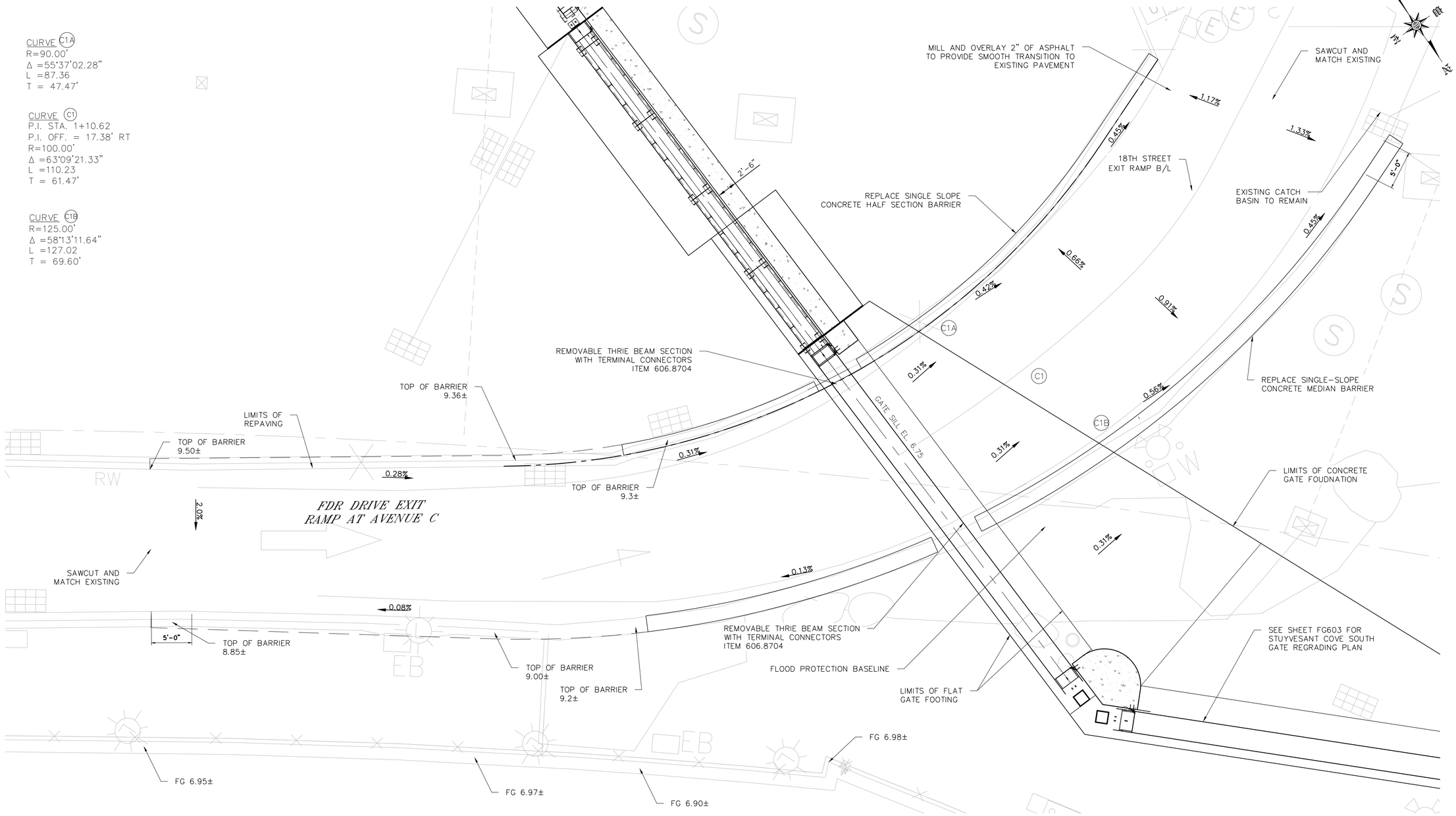

EAST 18TH STREET FDR EXIT GATE REGRADING OVERALL PLAN

CONCEPTUAL

SUBMITTED DATE: 1/31/2019

0 5 10
SCALE: 1" = 5'

TOPOGRAPHIC SURVEY PREPARED BY: FOR SURVEYOR
INFORMATION SEE SURVEY SET SU100 DRAWINGS SERIES

NO.	DATE	DESCRIPTIONS	BY	APPR'D
		REVISIONS		

FINAL DESIGN SUBMITTED BY: AKRF KSE — The AKRF-KSE JV

FINAL DESIGN PREPARED BY: ARCADIS
ARCADIS OF NEW YORK, INC.
NAME OF CONSULTANT
SIGNATURE
DATE

CITY OF NEW YORK
DEPARTMENT OF DESIGN + CONSTRUCTION
DIVISION OF INFRASTRUCTURE
BUREAU OF DESIGN

CLOSURE STRUCTURES
EAST 18TH STREET FDR EXIT GATE
REGRADING OVERALL PLAN

ARCADIS — DRAWN BY
SANDRESM1-FG552-00.DWG — CADD FILE

INSTALLATION OF
EAST SIDE COASTAL RESILIENCY
BOROUGH OF MANHATTAN

CAPITAL PROJECT NO. SANDRESM1 1/31/19
SHEET 271 OF 811
FG552

CONSULTANT DESIGN

CONCEPTUAL REDESIGN SUBMISSION 1/31/2019

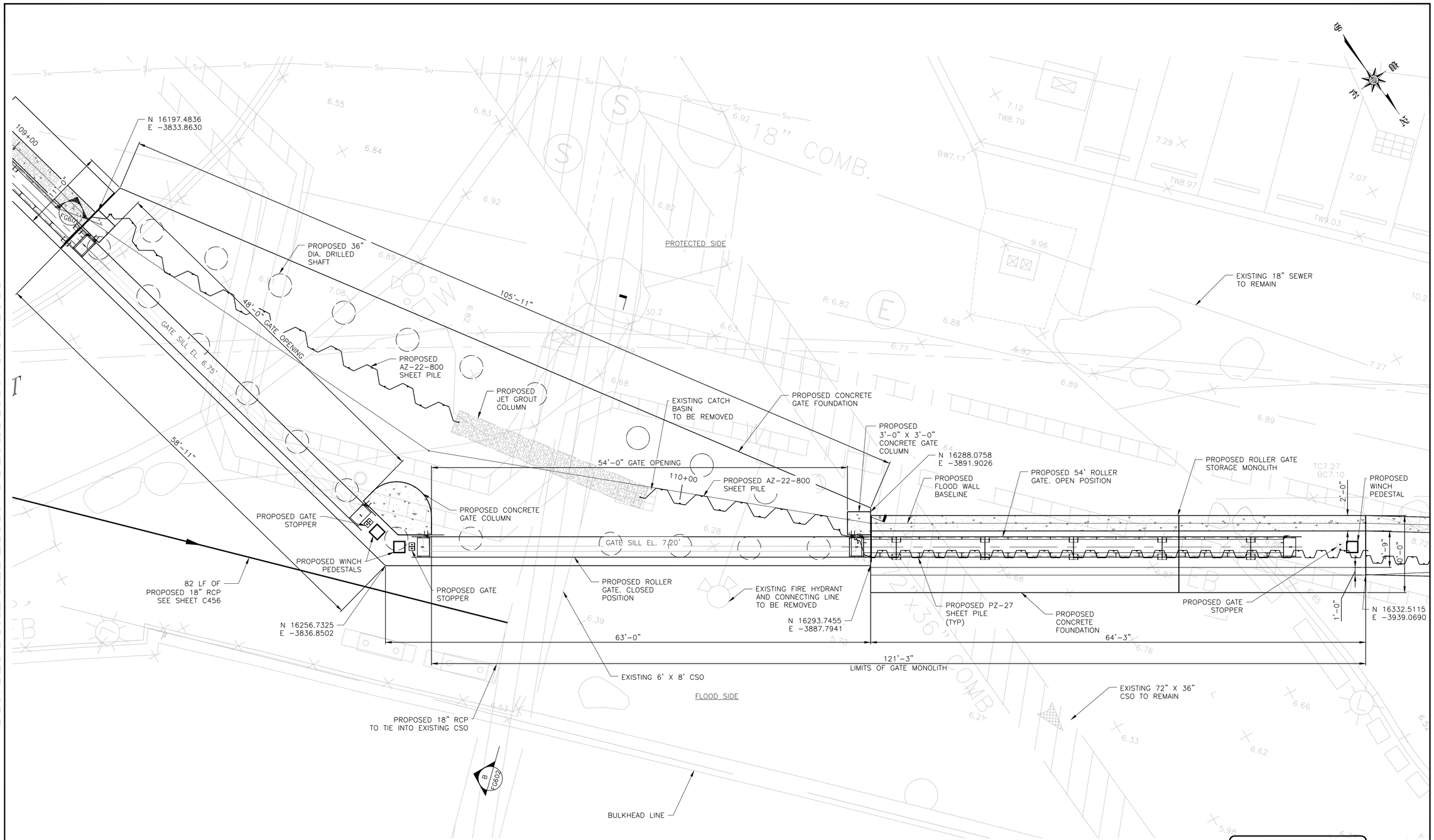

NOTES:

1. ALL ITEMS CALLED OUT AS EXISTING ARE TO REMAIN UNLESS NOTED OTHERWISE.
2. SEE SHEET SRXXX FOR STREET RESTORATION AND CURB GEOMETRY.
3. SEE SHEET PMP313 FOR PAVEMENT MARKINGS.
4. SEE SHEETS FG606 TO FG608 FOR CONCRETE GATE FOUNDATION STRUCTURAL DETAILS.
5. SEE SHEET FG613 FOR PILE LAYOUT AND SCHEDULE.
6. SEE SHEETS FG609 THOUGH FG612 FOR STRUCTURAL GATE DETAILS.

TOPOGRAPHIC SURVEY PREPARED BY: FOR SURVEYOR INFORMATION SEE SURVEY SET SU100 DRAWINGS SERIES

STUYVESANT COVE SOUTH GATE PLAN

0 5 10
SCALE: 1" = 5'

CONCEPTUAL

SUBMITTED DATE: 1/31/2019

NO.	DATE	DESCRIPTIONS	BY	APPR'D

REVISIONS

FINAL DESIGN SUBMITTED BY: AKRF KSE — The AKRF-KSE JV

FINAL DESIGN PREPARED BY: ARCADIS — ARCADIS OF NEW YORK, INC. NAME OF CONSULTANT

SIGNATURE

DATE

CITY OF NEW YORK
DEPARTMENT OF DESIGN + CONSTRUCTION
DIVISION OF INFRASTRUCTURE
BUREAU OF DESIGN

CLOSURE STRUCTURE
STUYVESANT COVE SOUTH GATE PLAN

ARCADIS — DRAWN BY

SANDRESM1-FG600-00.DWG — CADD FILE

INSTALLATION OF
EAST SIDE COASTAL RESILIENCY
BOROUGH OF MANHATTAN

CAPITAL PROJECT NO. SANDRESM1 1/31/19

SHEET 272 OF 811

FG600

CONSULTANT DESIGN

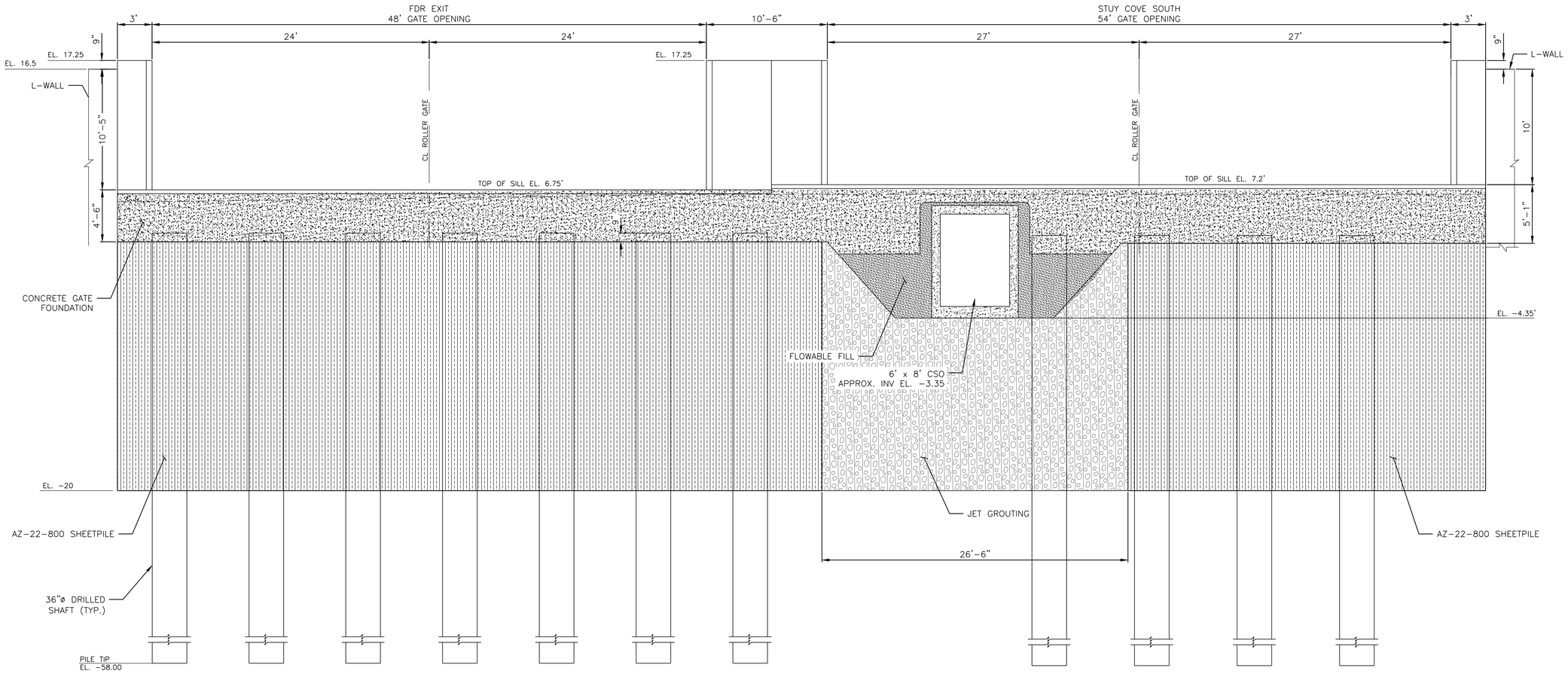

FDR EXIT & STUY COVE SOUTH ROLLER GATE PROTECTED SIDE ELEVATION

A / FG600 SCALE 1/4" = 1'-0"

CONCEPTUAL REDESIGN SUBMISSION 1/31/2019

LEGEND:

- FLOWABLE FILL
- JET GROUT

TOPOGRAPHIC SURVEY PREPARED BY: FOR SURVEYOR INFORMATION SEE SURVEY SET SU100 DRAWINGS SERIES

NOTES:

1. JET GROUTING SHALL BE PERFORMED WITH THE TRIPLE FLUID SYSTEM.
2. THE MINIMUM UNCONFINED COMPRESSIVE DESIGN STRENGTH OF THE SOILCRETE SHALL BE 500 PSI AT 3 DAYS AND 750 PSI AT 28 DAYS.
3. THE DESIGN PERMEABILITY OF THE SOILCRETE SHALL BE LESS THAN 1.0 X 10^{-6} CM/SEC.
4. USE VERTICAL AND ANGLED SLEEVE PIPES AS REQUIRED TO PERFORM JET GROUTING AROUND AND BELOW THE UTILITY LINES.
5. PRIOR TO PERFORMING JET GROUTING AND DRIVING SHEET PILES AT/NEAR EACH UTILITY LINE CROSSING LOCATION, PRE-TRENCH EXCAVATION TO LOCATE/EXPOSE THE UTILITY LINE (THEN BACKFILLING) AS REQUIRED.
6. FOR EXISTING UTILITY LINES LOCATED WITHIN THE LIMITS OF PROPOSED SOIL IMPROVEMENTS, SEE UTILITY CROSSING TYPE A, B, C AND D.
7. 14TH STREET CANARSIE L- TUNNEL.
8. ALL SPOT ELEVATIONS ARE EXISTING ELEVATIONS IN NAVD88.
9. EXCAVATABLE FILL SHALL HAVE A COMPRESSIVE STRENGTH OF 100PSI.
10. UTILITIES ARE SHOWN FOR INFORMATION PURPOSES ONLY AND ARE NOT EXACT LOCATIONS. CONTRACTOR SHALL EXCAVATE A 4 FT DEEP 10 FT WIDE TRENCH TO IDENTIFY UTILITY TYPE, DEPTH AND DIMENSIONS PRIOR TO BEGINNING SOIL IMPROVEMENT WORK. SUBMIT DETAILS OF ALL SITE OBSERVED UTILITIES TO THE CLIENT BEFORE BEGINNING WORK.
11. ALL PILES TIP ELEVATION SHOULD BE AT RESPECTIVE LEVEL OR TILL TO THE BED ROCK LEVEL.

CONCEPTUAL

SUBMITTED DATE: 1/31/2019

NO.	DATE	DESCRIPTIONS	BY	APPR'D

REVISIONS

FINAL DESIGN SUBMITTED BY: AKRF KSE — The AKRF-KSE JV

FINAL DESIGN PREPARED BY: ARCADIS — ARCADIS OF NEW YORK, INC. NAME OF CONSULTANT

SIGNATURE

DATE

CITY OF NEW YORK
DEPARTMENT OF DESIGN + CONSTRUCTION
DIVISION OF INFRASTRUCTURE
BUREAU OF DESIGN

CLOSURE STRUCTURES
FDR EXIT & STUY COVE SOUTH ROLLER GATE ELEVATION

ARCADIS — DRAWN BY

SANDRESM1-FG601-00.DWG — CADD FILE

INSTALLATION OF
EAST SIDE COASTAL RESILIENCY
BOROUGH OF MANHATTAN

CAPITAL PROJECT NO. SANDRESM1 1/31/19

SHEET 273 OF 811

FG601

CONSULTANT DESIGN

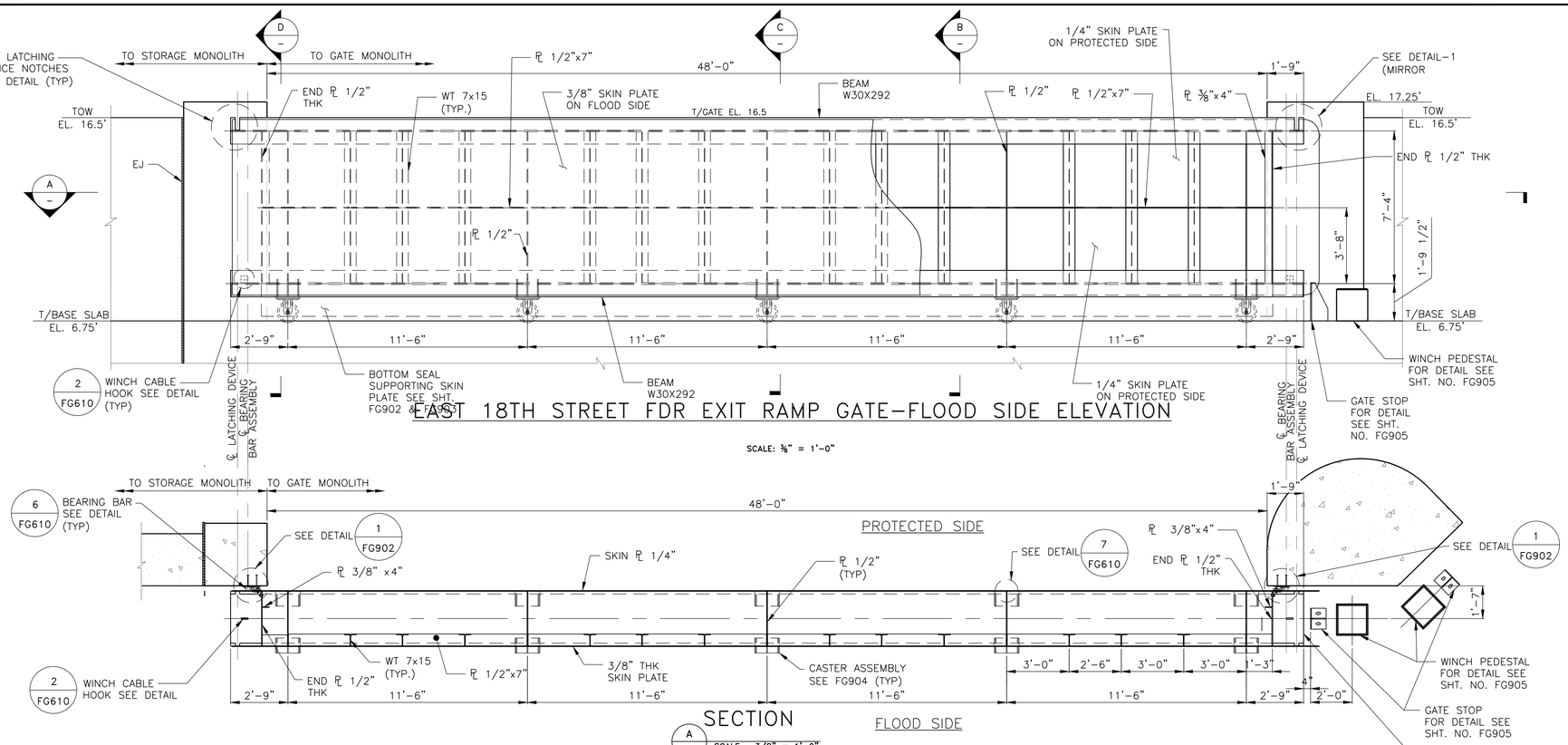

EAST 18TH STREET FDR EXIT RAMP GATE-FLOOD SIDE ELEVATION

SCALE: 3/8" = 1'-0"

SECTION

A SCALE:- 3/8" = 1'-0"

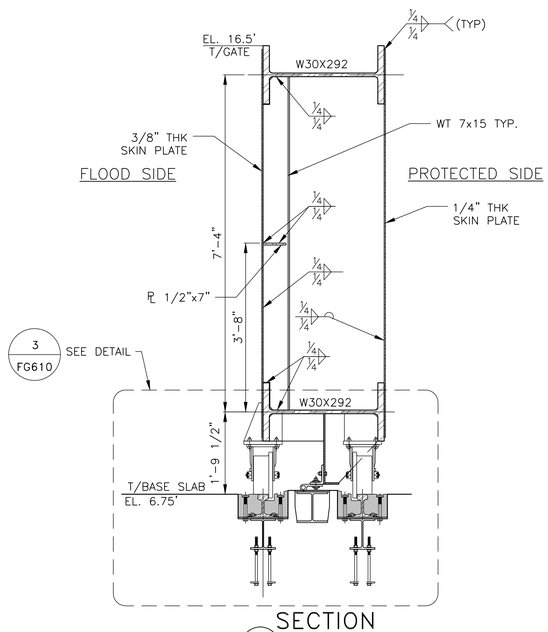

SECTION

B SCALE:- 3/4" = 1'-0"

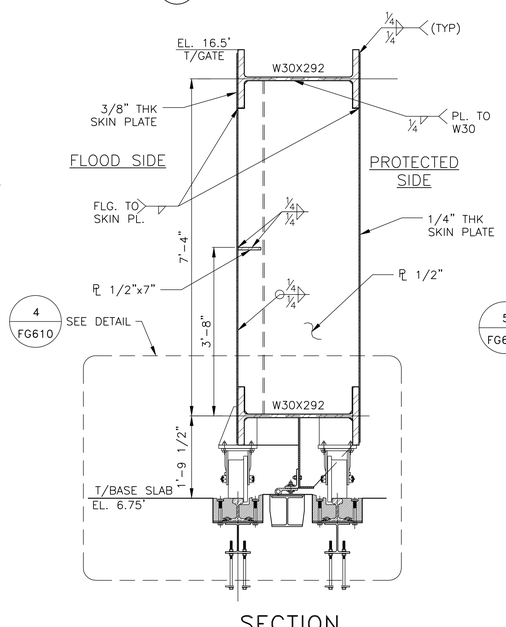

SECTION

C SCALE:- 3/4" = 1'-0"

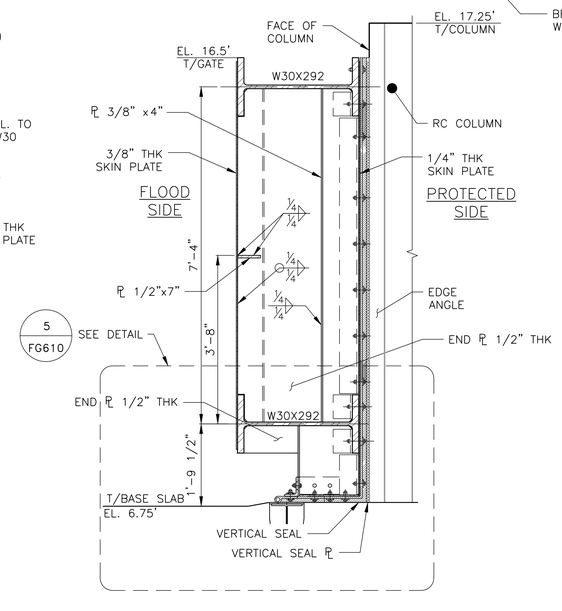

SECTION

D SCALE:- 3/4" = 1'-0"

NOTE:

1. ALL ITEMS NOT IDENTIFIED WITH A PAY ITEM NUMBER SHALL BE COVERED UNDER THE GATE LUMP SUM PAY ITEM ESCR 50.N.3
2. SEE DWG. FG606, FG607 & FG608 FOR FOUNDATION DETAILS.

CONCEPTUAL

SUBMITTED DATE: 1/31/2019

NO.	DATE	DESCRIPTIONS	BY	APPR'D
		REVISIONS		

FINAL DESIGN SUBMITTED BY: AKRF KSE — The AKRF-KSE JV

FINAL DESIGN PREPARED BY: ARCADIS — ARCADIS OF NEW YORK, INC. NAME OF CONSULTANT

SIGNATURE

DATE

CITY OF NEW YORK
DEPARTMENT OF DESIGN + CONSTRUCTION
DIVISION OF INFRASTRUCTURE
BUREAU OF DESIGN

CLOSURE STRUCTURES
EAST 18th STREET FDR EXIT GATE
PLAN & ELEVATION SHEET 1 OF 2

ARCADIS DRAWN BY — SANDRESM1-FG609-00.DWG CADD FILE

INSTALLATION OF
EAST SIDE COASTAL RESILIENCY
BOROUGH OF MANHATTAN

CAPITAL PROJECT NO. SANDRESM1 1/31/19 — SHEET 279 OF 811 — FG609

CONSULTANT DESIGN

CONCEPTUAL REDESIGN SUBMISSION 1/31/2019

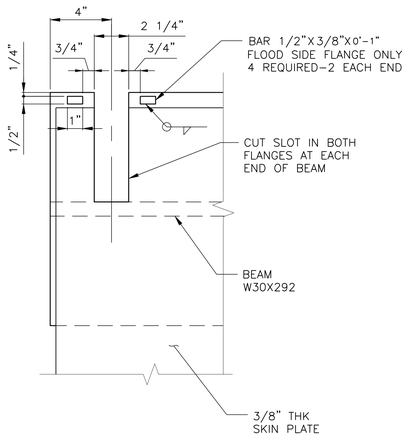

DETAIL

1 FG609 SCALE:- 3" = 1'-0"

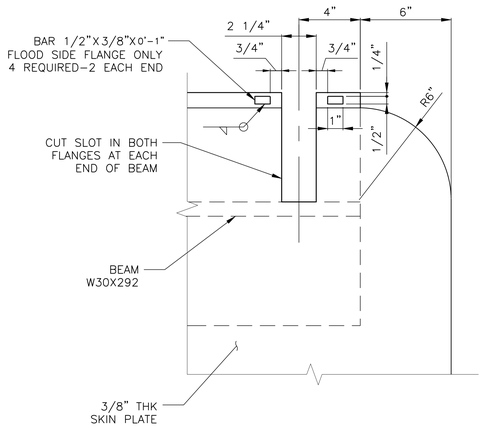

DETAIL (MIRROR)

1 FG609 SCALE:- 3" = 1'-0"

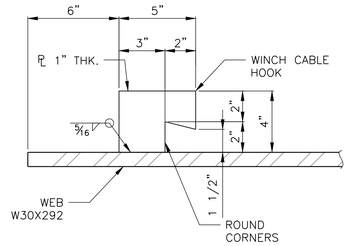

DETAIL WINCH CABLE HOOK

2 FG609 SCALE:- 3" = 1'-0"

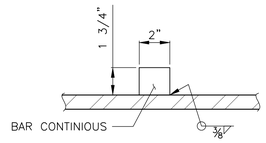

BEARING BAR DETAIL

6 FG609 SCALE:- 3" = 1'-0"

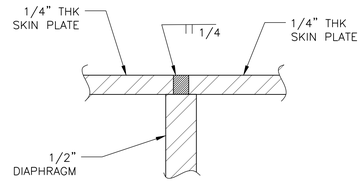

DETAIL

7 FG609 SCALE:- 1" = 1'-0"

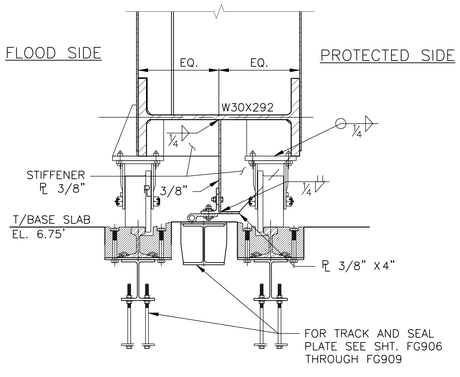

DETAIL

3 FG609 SCALE:- 1" = 1'-0"

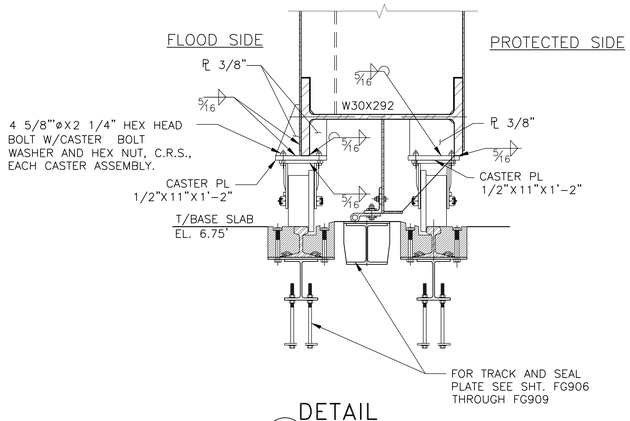

DETAIL

4 FG609 SCALE:- 1" = 1'-0"

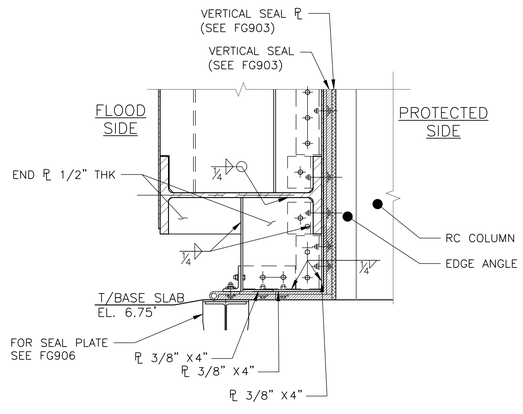

DETAIL

5 FG609 SCALE:- 1" = 1'-0"

NOTE: PARTICULAR ATTENTION SHALL BE GIVEN TO FIELD ADJUSTMENT OF BOTTOM SEAL TO OBTAIN PROPER SEAL WITH SEAL PLATE

CONCEPTUAL

SUBMITTED DATE: 1/31/2019

NOTES:
1. FOR TYPICAL LATCHING DETAILS SEE DWG. FG900 & FG901.
2. FOR FOR TYPICAL ROLLER GATE SEAL DETAILS SEE DWG. FG902 & FG903.

NO.	DATE	DESCRIPTIONS	BY	APPR'D

REVISIONS

FINAL DESIGN SUBMITTED BY: AKRF KSE — The AKRF-KSE JV

FINAL DESIGN PREPARED BY: ARCADIS — ARCADIS OF NEW YORK, INC. NAME OF CONSULTANT

SIGNATURE

DATE

CITY OF NEW YORK
DEPARTMENT OF DESIGN + CONSTRUCTION
DIVISION OF INFRASTRUCTURE
BUREAU OF DESIGN

CLOSURE STRUCTURES
EAST 18th STREET FDR EXIT GATE
PLAN & ELEVATION SHEET 2 OF 2

ARCADIS DRAWN BY

SANDRESM1-FG610-00.DWG CADD FILE

INSTALLATION OF
EAST SIDE COASTAL RESILIENCY
BOROUGH OF MANHATTAN

CAPITAL PROJECT NO. SANDRESM1 1/31/19

SHEET 280 OF 811

FG610

CONSULTANT DESIGN

CONCEPTUAL REDESIGN SUBMISSION 1/31/2019

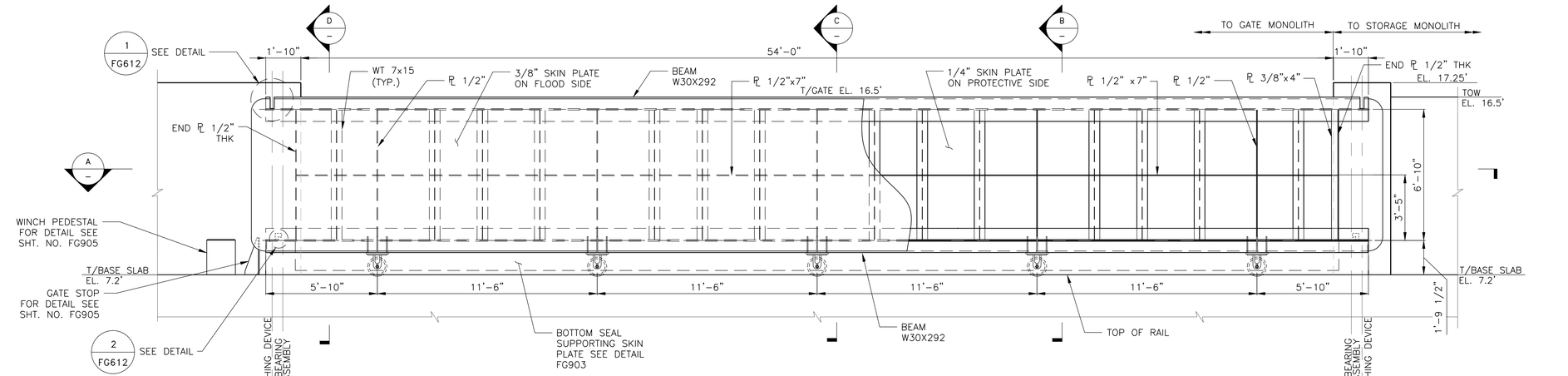

STUYVESANT COVE SOUTH ROLLER GATE–FLOOD SIDE ELEVATION

SCALE: 3/8" = 1'-0"

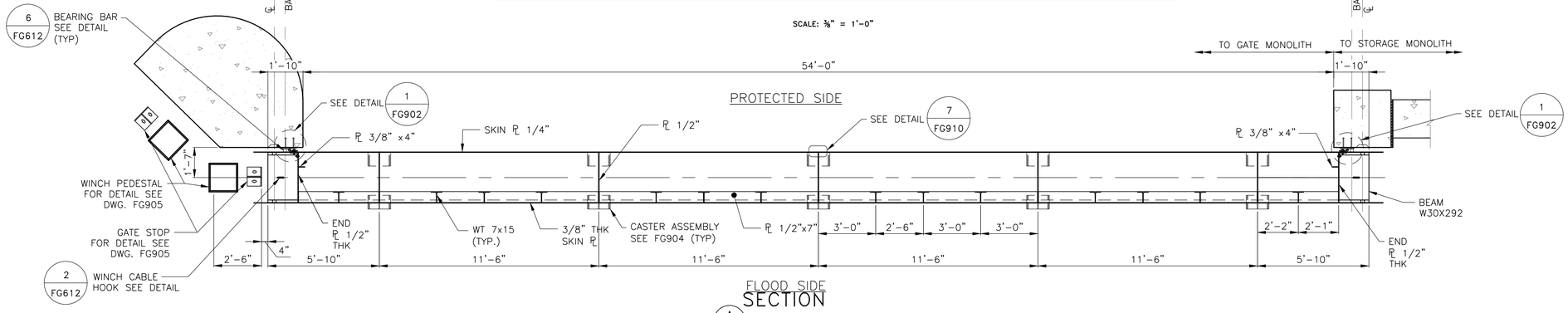

SECTION

SCALE:– 3/8" = 1'-0"

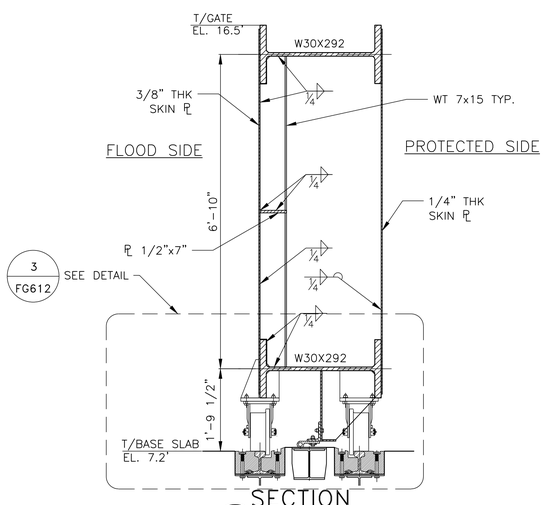

SECTION

SCALE:– 3/4" = 1'-0"

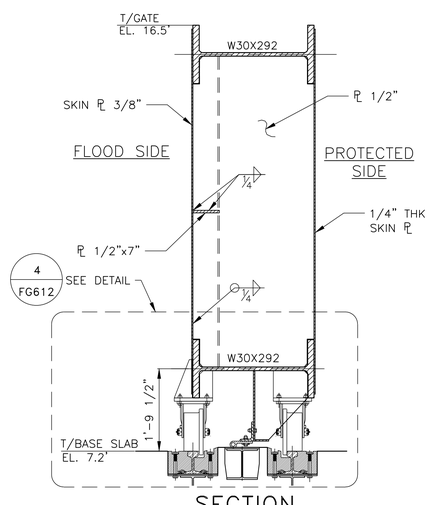

SECTION

SCALE:– 3/4" = 1'-0"

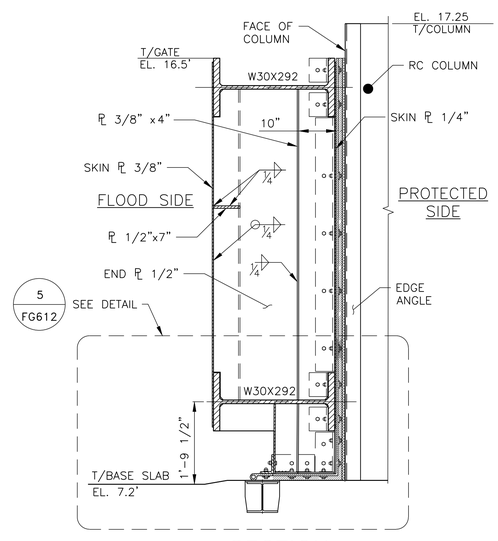

SECTION

SCALE:– 3/4" = 1'-0"

NOTE:

1. ALL ITEMS NOT IDENTIFIED WITH A PAY ITEM NUMBER SHALL BE COVERED UNDER THE GATE LUMP SUM PAY ITEM ESCR 50.N.4
2. SEE DWG. FG606 TO FG608 FOR FOUNDATION DETAILS.

CONCEPTUAL

SUBMITTED DATE: 1/31/2019

NO.	DATE	DESCRIPTIONS	BY	APPR'D

REVISIONS

FINAL DESIGN SUBMITTED BY: AKRF KSE — The AKRF-KSE JV

FINAL DESIGN PREPARED BY: ARCADIS — ARCADIS OF NEW YORK, INC. NAME OF CONSULTANT

SIGNATURE

DATE

CITY OF NEW YORK
DEPARTMENT OF DESIGN + CONSTRUCTION
DIVISION OF INFRASTRUCTURE
BUREAU OF DESIGN

CLOSURE STRUCTURES
STUYVESANT COVE SOUTH GATE
PLAN & ELEVATION SHEET 1 OF 2

ARCADIS — DRAWN BY
SANDRESM1–FG611–00.DWG — CADD FILE

INSTALLATION OF
EAST SIDE COASTAL RESILIENCY
BOROUGH OF MANHATTAN

CAPITAL PROJECT NO. SANDRESM1 1/31/19

SHEET 281 OF 811 FG611

CONSULTANT DESIGN

CONCEPTUAL REDESIGN SUBMISSION 1/31/2019

CONCEPTUAL REDESIGN SUBMISSION 1/31/2019

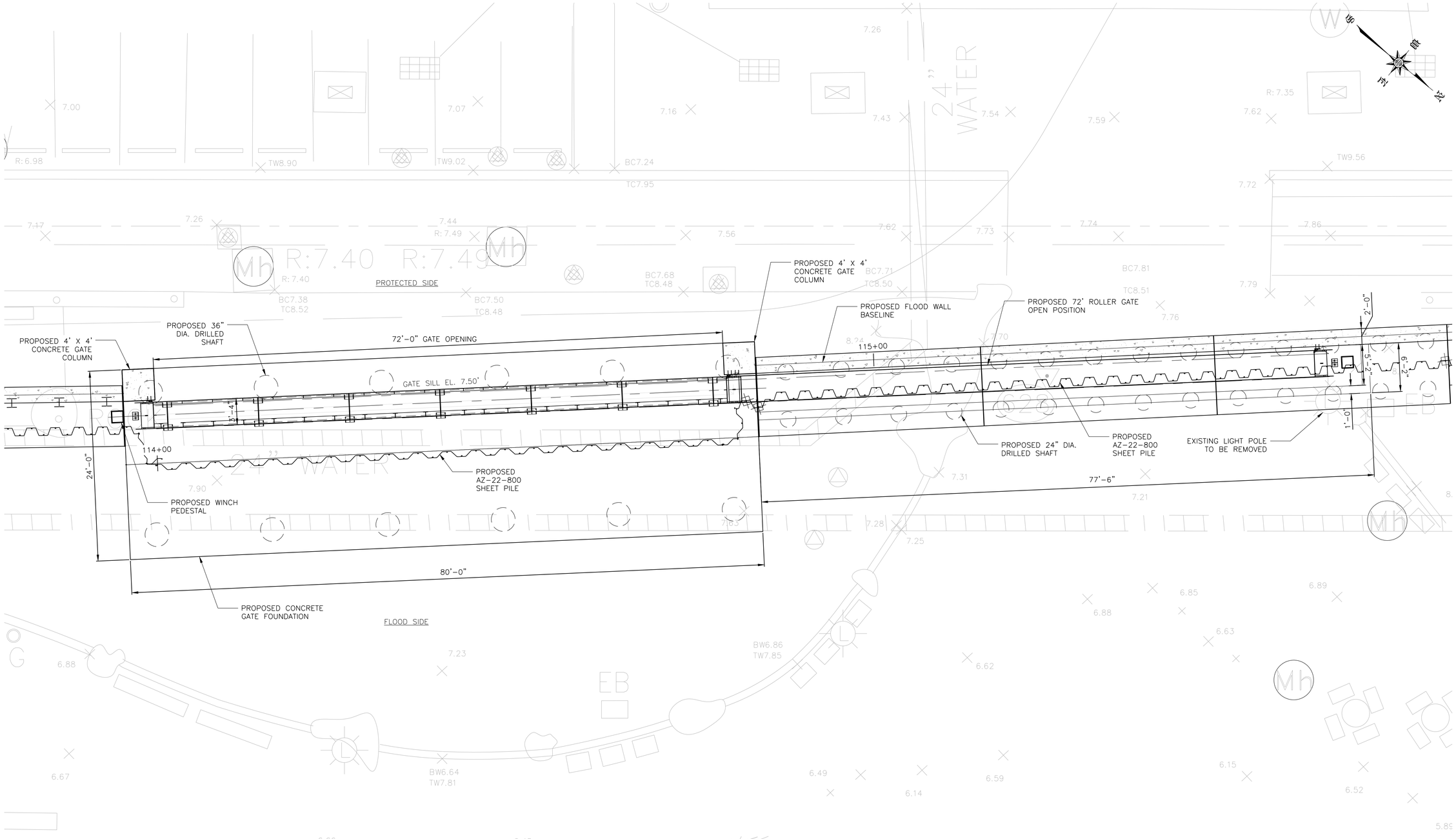

NOTES:

1. ALL ITEMS CALLED OUT AS EXISTING ARE TO REMAIN UNLESS NOTED OTHERWISE.
2. SEE SHEET SRXXX FOR STREET RESTORATION AND CURB GEOMETRY.
3. SEE SHEET PMP313 FOR PAVEMENT MARKINGS.
4. SEE SHEETS FG654 & FG655 FOR CONCRETE GATE FOUNDATION STRUCTURAL DETAILS.
5. SEE SHEET FG658 FOR PILE LAYOUT AND SCHEDULE.
6. SEE SHEETS FG656 & FG657 FOR STRUCTURAL GATE DETAILS.

TOPOGRAPHIC SURVEY PREPARED BY: FOR SURVEYOR INFORMATION SEE SURVEY SET SU100 DRAWINGS SERIES

EAST 20TH STREET GATE PLAN

SCALE: 1" = 5'

CONCEPTUAL

SUBMITTED DATE: 1/31/2019

NO.	DATE	DESCRIPTIONS	BY	APPR'D

REVISIONS

FINAL DESIGN SUBMITTED BY: AKRF KSE — The AKRF-KSE JV

FINAL DESIGN PREPARED BY: ARCADIS — ARCADIS OF NEW YORK, INC. NAME OF CONSULTANT — SIGNATURE — DATE

CITY OF NEW YORK
DEPARTMENT OF DESIGN + CONSTRUCTION
DIVISION OF INFRASTRUCTURE
BUREAU OF DESIGN

CLOSURE STRUCTURES
EAST 20TH STREET GATE
PLAN

ARCADIS DRAWN BY — SANDRESM1-FG650-00 CADD FILE

INSTALLATION OF
EAST SIDE COASTAL RESILIENCY
BOROUGH OF MANHATTAN

CAPITAL PROJECT NO. SANDRESM1 1/31/19 — SHEET 284 OF 811 — FG650

T0000A1G0000

CONSULTANT DESIGN

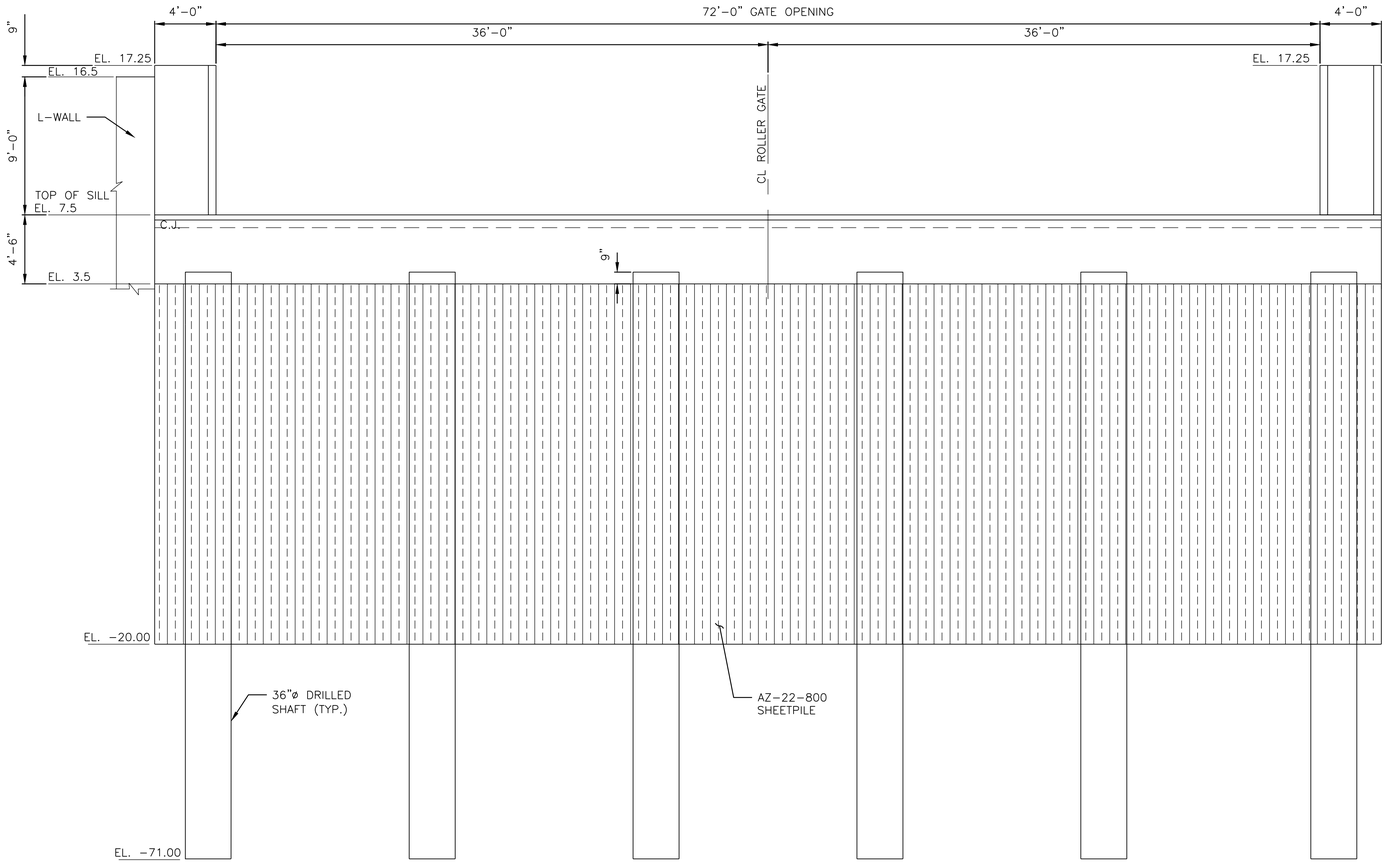

A
FG650

SECTION THROUGH EAST 20TH STREET GATE

SCALE 1/4" = 1'-0"

CONCEPTUAL REDESIGN SUBMISSION 1/31/2019

CONCEPTUAL

SUBMITTED DATE: 1/31/2019

NO.	DATE	DESCRIPTIONS	BY	APPR'D

REVISIONS

TOPOGRAPHIC SURVEY PREPARED BY: FOR SURVEYOR INFORMATION SEE SURVEY SET SU100 DRAWINGS SERIES

FINAL DESIGN SUBMITTED BY:
AKRF KSE
The AKRF-KSE JV

FINAL DESIGN PREPARED BY:
ARCADIS
ARCADIS OF NEW YORK, INC.
NAME OF CONSULTANT

SIGNATURE

DATE

CITY OF NEW YORK
DEPARTMENT OF DESIGN + CONSTRUCTION
DIVISION OF INFRASTRUCTURE
BUREAU OF DESIGN

CLOSURE STRUCTURES
EAST 20TH STREET GATE
ELEVATION

ARCADIS
DRAWN BY

SANDRESM1-FG907-00
CADD FILE

INSTALLATION OF
EAST SIDE COASTAL RESILIENCY
BOROUGH OF MANHATTAN

CAPITAL PROJECT NO. SANDRESM1 1/31/19

SHEET 285 OF 811

FG651

CONSULTANT DESIGN

CONCEPTUAL REDESIGN SUBMISSION 1/31/2019

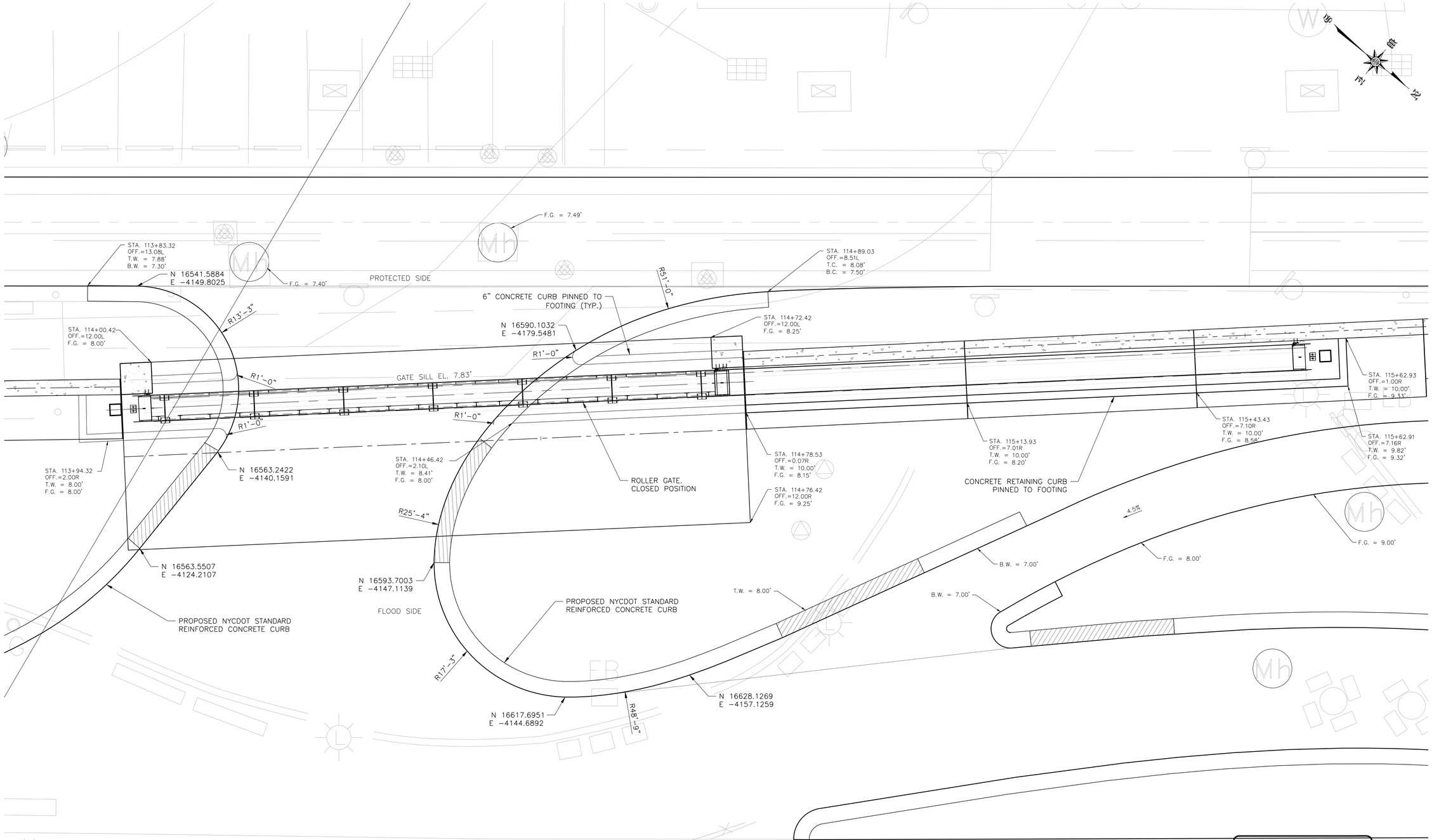

EAST 20TH STREET GATE REGRADING OVERALL PLAN

CONCEPTUAL

SUBMITTED DATE: 1/31/2019

0 5 10
SCALE: 1" = 5'

TOPOGRAPHIC SURVEY PREPARED BY: FOR SURVEYOR
INFORMATION SEE SURVEY SET SU100 DRAWINGS SERIES

NO.	DATE	DESCRIPTIONS	BY	APPR'D

REVISIONS

FINAL DESIGN SUBMITTED BY:
AKRF KSE
The AKRF-KSE JV

FINAL DESIGN PREPARED BY:
ARCADIS
ARCADIS OF NEW YORK, INC.
NAME OF CONSULTANT

SIGNATURE
DATE

CITY OF NEW YORK
DEPARTMENT OF DESIGN + CONSTRUCTION
DIVISION OF INFRASTRUCTURE
BUREAU OF DESIGN

CLOSURE STRUCTURES
EAST 20TH STREET GATE
REGRADING OVERALL PLAN

ARCADIS
DRAWN BY

SANDRESM1-FG652-00
CADD FILE

INSTALLATION OF
EAST SIDE COASTAL RESILIENCY
BOROUGH OF MANHATTAN

CAPITAL PROJECT NO. SANDRESM1 1/31/19

SHEET 286 OF 811

FG652

T0000A1G0000

CONSULTANT DESIGN

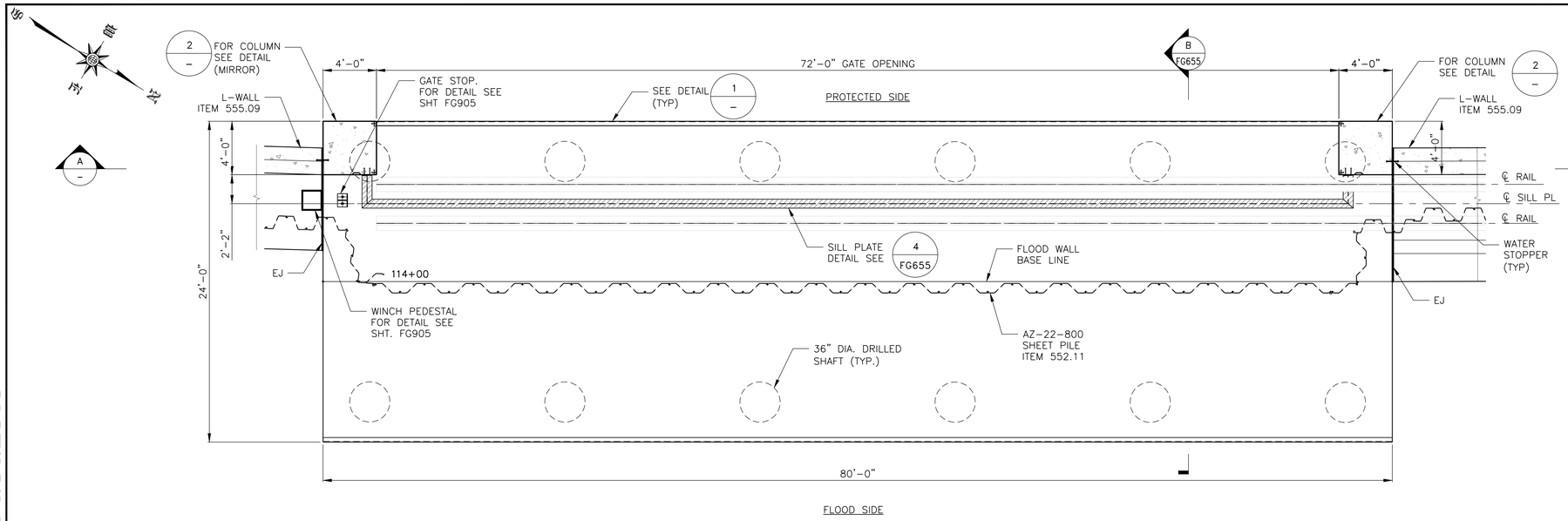

FOUNDATION LVL. PLAN VIEW – EAST 20th STREET GATE MONOLITH

SCALE: ¼" = 1'-0"

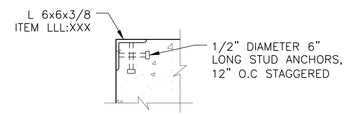

DETAIL 1
SCALE:- 1 1/2" = 1'-0"

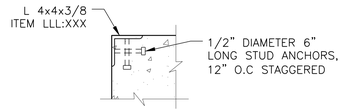

DETAIL 3
SCALE:- 1 1/2" = 1'-0"

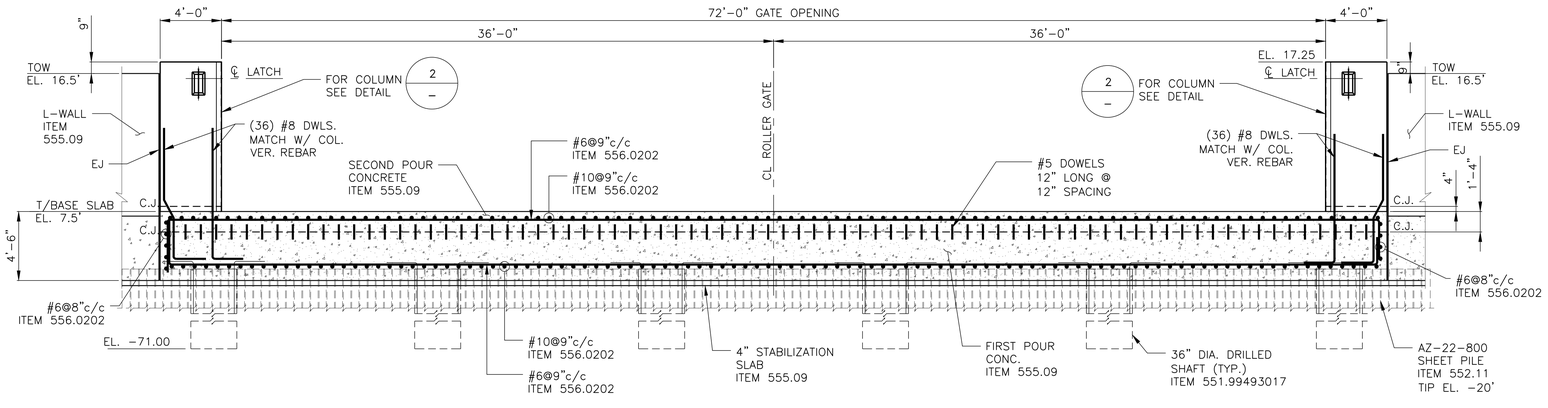

SECTION A
SCALE:- 1/4" = 1'-0"

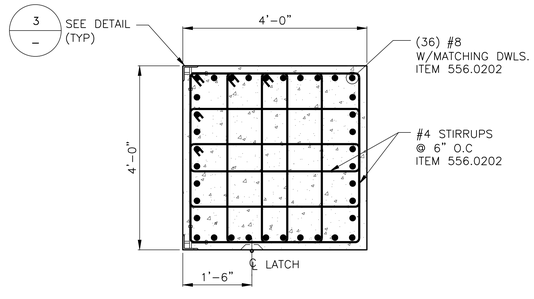

DETAIL 2
SCALE:- 3/4" = 1'-0"

CONCEPTUAL

SUBMITTED DATE: 1/31/2019

CONCEPTUAL REDESIGN SUBMISSION 1/31/2019

NOTES:

1. FOR CONCRETE MONOLITH PILE LAYOUT AND SCHEDULE SEE DWG. FG658.
2. FOR GATE DETAILS SEE DWG. FG656 & FG657.
3. FOR EXISTING UTILITIES, SHEET PILE/JET GROUT DETAILS SEE DWG. FG650 TO FG651.
4. FOR TYPICAL DRILLED SHAFT PILE DETAILS SEE DWG. FS411.
5. FOR LATCHING HOOK DETAILS SEE DWG. FG900 AND FG901.

NO.	DATE	DESCRIPTIONS	BY	APPR'D

REVISIONS

FINAL DESIGN SUBMITTED BY: AKRF KSE — The AKRF-KSE JV

FINAL DESIGN PREPARED BY: ARCADIS — ARCADIS OF NEW YORK, INC. NAME OF CONSULTANT

SIGNATURE

DATE

CITY OF NEW YORK
DEPARTMENT OF DESIGN + CONSTRUCTION
DIVISION OF INFRASTRUCTURE
BUREAU OF DESIGN

CLOSURE STRUCTURES
EAST 20TH STREET GATE
CONCRETE MONOLITH SHEET 1 OF 2

ARCADIS DRAWN BY

SANDRESM1-FG654-00.DWG CADD FILE

INSTALLATION OF
EAST SIDE COASTAL RESILIENCY
BOROUGH OF MANHATTAN

CAPITAL PROJECT NO. SANDRESM1 1/31/19

SHEET 287 OF 811

FG654

CONSULTANT DESIGN

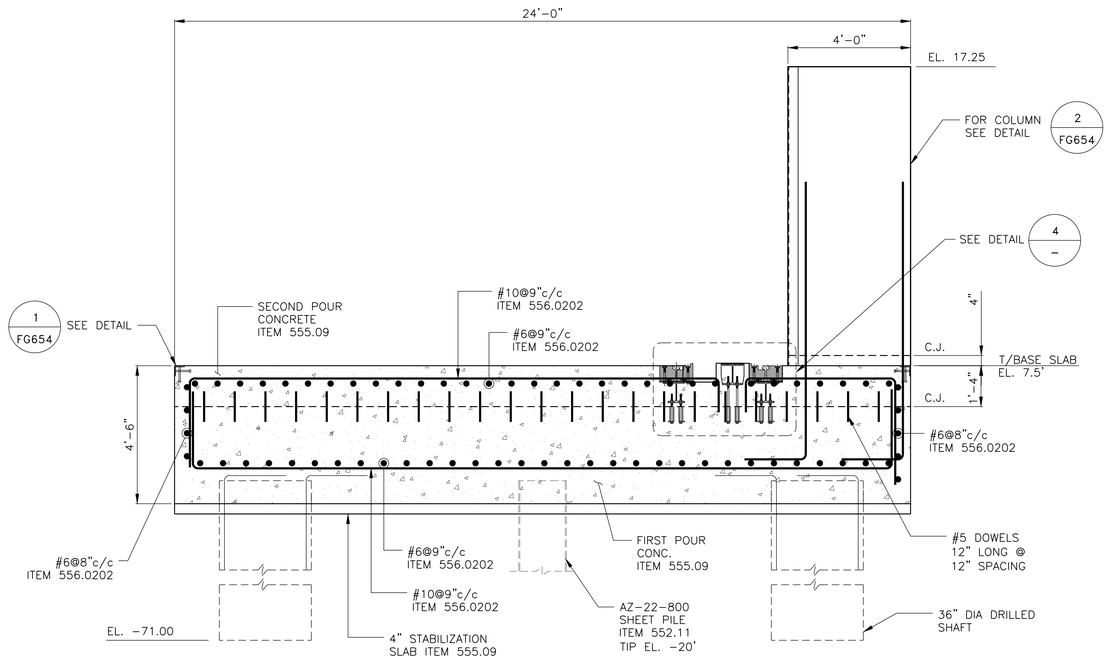

SECTION

B / FG654 SCALE:- 1/2" = 1'-0"

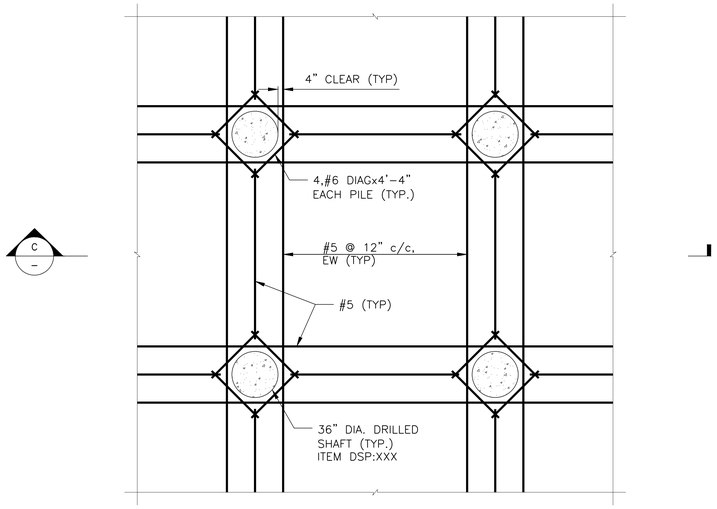

TYPICAL SHRINKAGE REINFORCEMENT DETAIL

SCALE: ¼" = 1'-0"

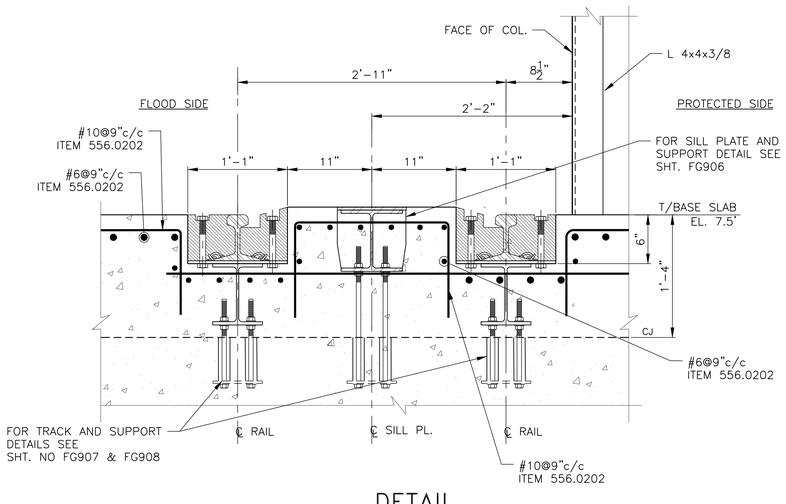

DETAIL

4 / – SCALE:- 1 1/2" = 1'-0"

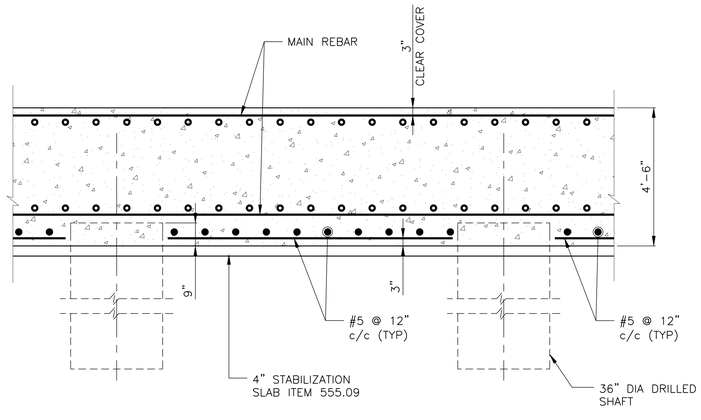

SECTION

C / – SCALE:- 1/2" = 1'-0"

NOTES:

1. FOR CONCRETE MONOLITH PILE LAYOUT AND SCHEDULE SEE DWG. FG658.
2. FOR GATE DETAILS SEE DWG. FG656 & FG657.
3. FOR EXISTING UTILITIES, SHEET PILE/JET GROUT DETAILS SEE DWG. FG650 TO FG653.
4. FOR TYPICAL DRILLED SHAFT PILE DETAILS SEE DWG. FS411.
5. FOR LATCHING HOOK DETAILS SEE DWG. FG900 AND FG901.

CONCEPTUAL

SUBMITTED DATE: 1/31/2019

NO.	DATE	DESCRIPTIONS	BY	APPR'D

REVISIONS

CONCEPTUAL REDESIGN SUBMISSION 1/31/2019

FINAL DESIGN SUBMITTED BY: AKRF KSE — The AKRF-KSE JV

FINAL DESIGN PREPARED BY: ARCADIS — ARCADIS OF NEW YORK, INC. NAME OF CONSULTANT

SIGNATURE

DATE

CITY OF NEW YORK
DEPARTMENT OF DESIGN + CONSTRUCTION
DIVISION OF INFRASTRUCTURE
BUREAU OF DESIGN

CLOSURE STRUCTURES
EAST 20TH STREET GATE
CONCRETE MONOLITH SHEET 2 OF 2

ARCADIS — DRAWN BY

SANDRESM1-FG655-00.DWG — CADD FILE

INSTALLATION OF
EAST SIDE COASTAL RESILIENCY
BOROUGH OF MANHATTAN

CAPITAL PROJECT NO. SANDRESM1 1/31/19

SHEET 288 OF 811

FG655

CONSULTANT DESIGN

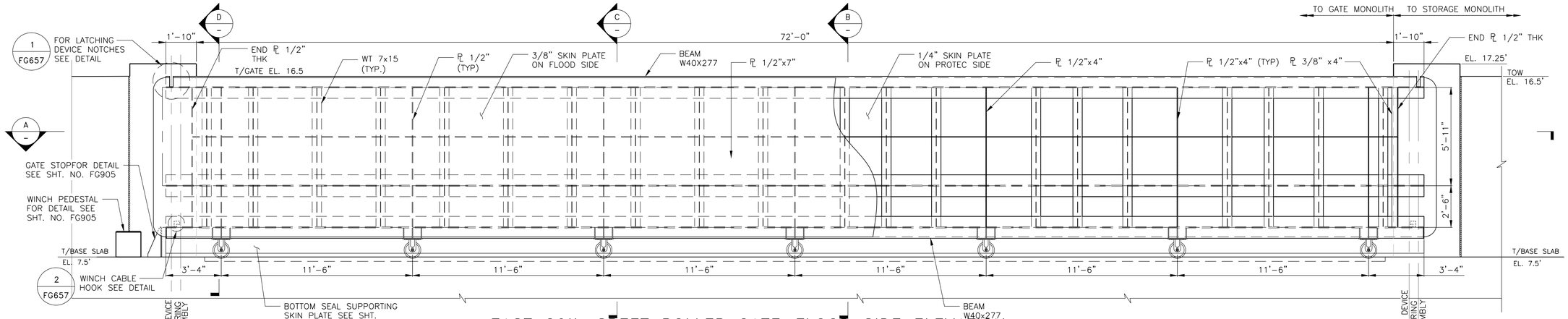

EAST 20th SREET ROLLER GATE–FLOOD SIDE ELEVATION

SCALE: ⅜" = 1'-0"

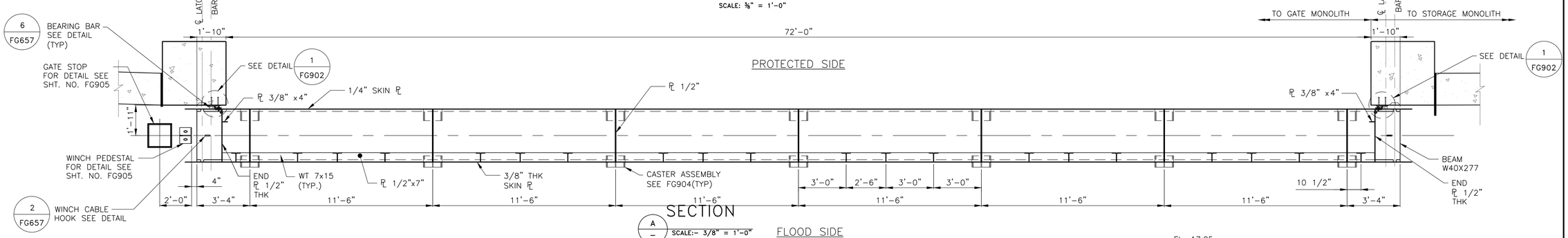

SECTION

A SCALE:– 3/8" = 1'-0"

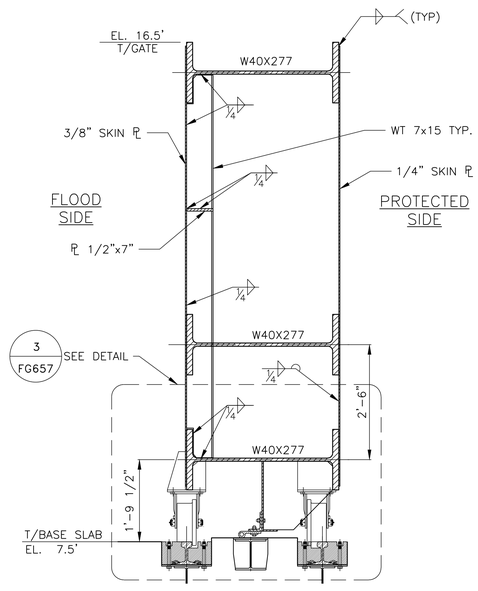

SECTION

B SCALE:– 3/4" = 1'-0"

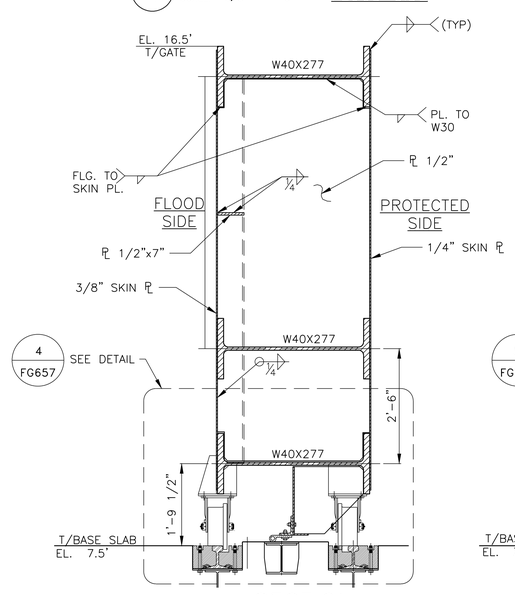

SECTION

C SCALE:– 3/4" = 1'-0"

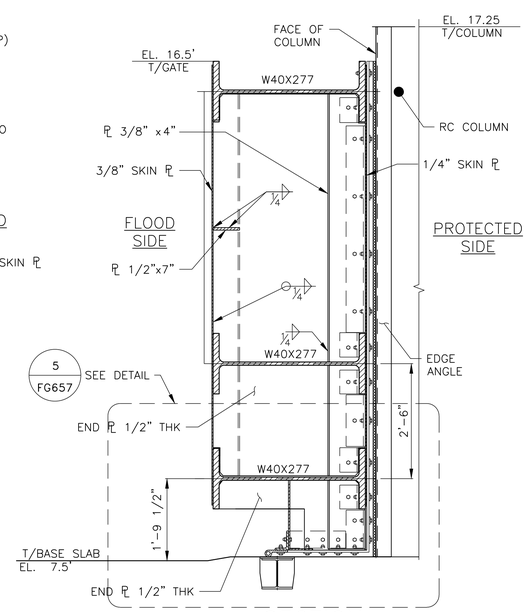

SECTION

D SCALE:– 3/4" = 1'-0"

NOTE:

1. ALL ITEMS NOT IDENTIFIED WITH A PAY ITEM NUMBER SHALL BE COVERED UNDER THE GATE LUMP SUM PAY ITEM ESCR 50.N.5
2. SEE DWG. FG652 FOR 72' AT EAST 20TH STREET FOUNDATION DETAILS.

CONCEPTUAL

SUBMITTED DATE: 1/31/2019

NO.	DATE	DESCRIPTIONS	BY	APPR'D
		REVISIONS		

FINAL DESIGN SUBMITTED BY: AKRF KSE — The AKRF-KSE JV

FINAL DESIGN PREPARED BY: ARCADIS — ARCADIS OF NEW YORK, INC. NAME OF CONSULTANT

SIGNATURE

DATE

CITY OF NEW YORK
DEPARTMENT OF DESIGN + CONSTRUCTION
DIVISION OF INFRASTRUCTURE
BUREAU OF DESIGN

CLOSURE STRUCTURES
EAST 20TH STREET GATE PLAN & ELEVATION
SHEET 1 OF 2

ARCADIS DRAWN BY — SANDRESM1-FG656-00.DWG CADD FILE

INSTALLATION OF
EAST SIDE COASTAL RESILIENCY
BOROUGH OF MANHATTAN

CAPITAL PROJECT NO. SANDRESM1 1/31/19 — SHEET 289 OF 811 — FG656

CONSULTANT DESIGN

CONCEPTUAL REDESIGN SUBMISSION 1/31/2019

CONCEPTUAL REDESIGN SUBMISSION 1/31/2019

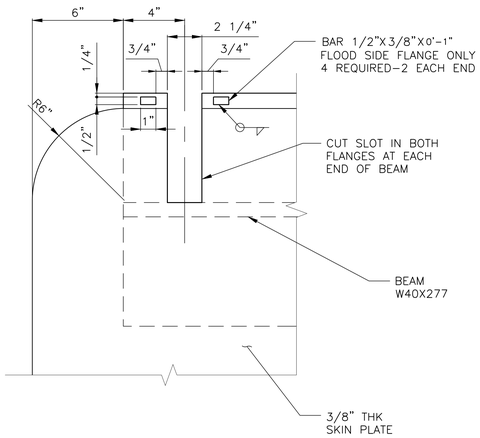

DETAIL
1 FG656 SCALE:- 3" = 1'-0"

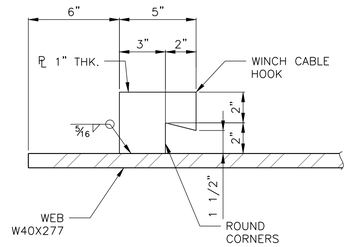

WINCH CABLE HOOK
2 FG656 SCALE:- 3" = 1'-0"

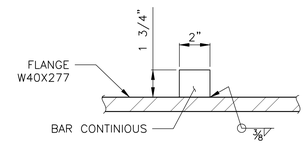

BEARING BAR DETAIL
6 FG656 SCALE:- 3" = 1'-0"

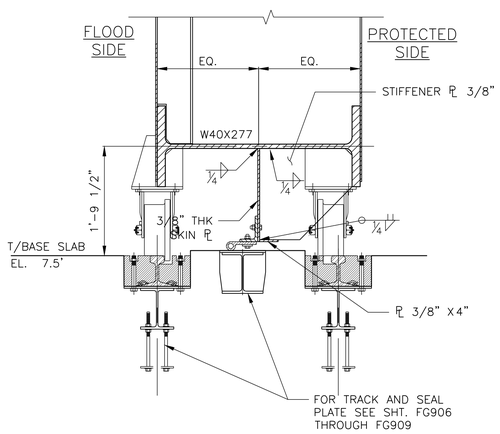

DETAIL
3 FG656 SCALE:- 1" = 1'-0"

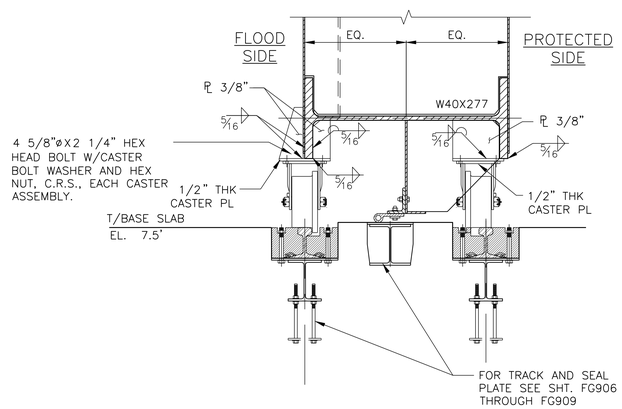

DETAIL
4 FG656 SCALE:- 1" = 1'-0"

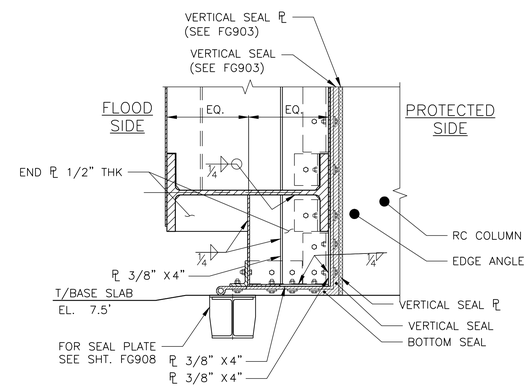

DETAIL
5 FG656 SCALE:- 1" = 1'-0"

CONCEPTUAL

SUBMITTED DATE: 1/31/2019

NOTES
1. FOR TYPICAL LATCHING DETAILS SEE DWG. FG900.
2. FOR FOR TYPICAL ROLLER GATE SEAL DETAILS SEE DWG. FG902 & FG903.
3. PARTICULAR ATTENTION SHALL BE GIVEN TO FIELD ADJUSTMENT OF BOTTOM SEAL TO OBTAIN PROPER SEAL WITH SEAL PLATE

NO.	DATE	DESCRIPTIONS	BY	APPR'D

REVISIONS

FINAL DESIGN SUBMITTED BY: AKRF KSE The AKRF-KSE JV

FINAL DESIGN PREPARED BY: ARCADIS
ARCADIS OF NEW YORK, INC.
NAME OF CONSULTANT
SIGNATURE
DATE

CITY OF NEW YORK
DEPARTMENT OF DESIGN + CONSTRUCTION
DIVISION OF INFRASTRUCTURE
BUREAU OF DESIGN

CLOSURE STRUCTURES
EAST 20TH STREET GATE PLAN & ELEVATION
SHEET 2 OF 2

ARCADIS DRAWN BY
SANDRESM1-FG657-00.DWG CADD FILE

INSTALLATION OF
EAST SIDE COASTAL RESILIENCY
BOROUGH OF MANHATTAN

CAPITAL PROJECT NO. SANDRESM1 1/31/19
SHEET 290 OF 811
FG657

CONSULTANT DESIGN

CONCEPTUAL REDESIGN SUBMISSION 1/31/2019

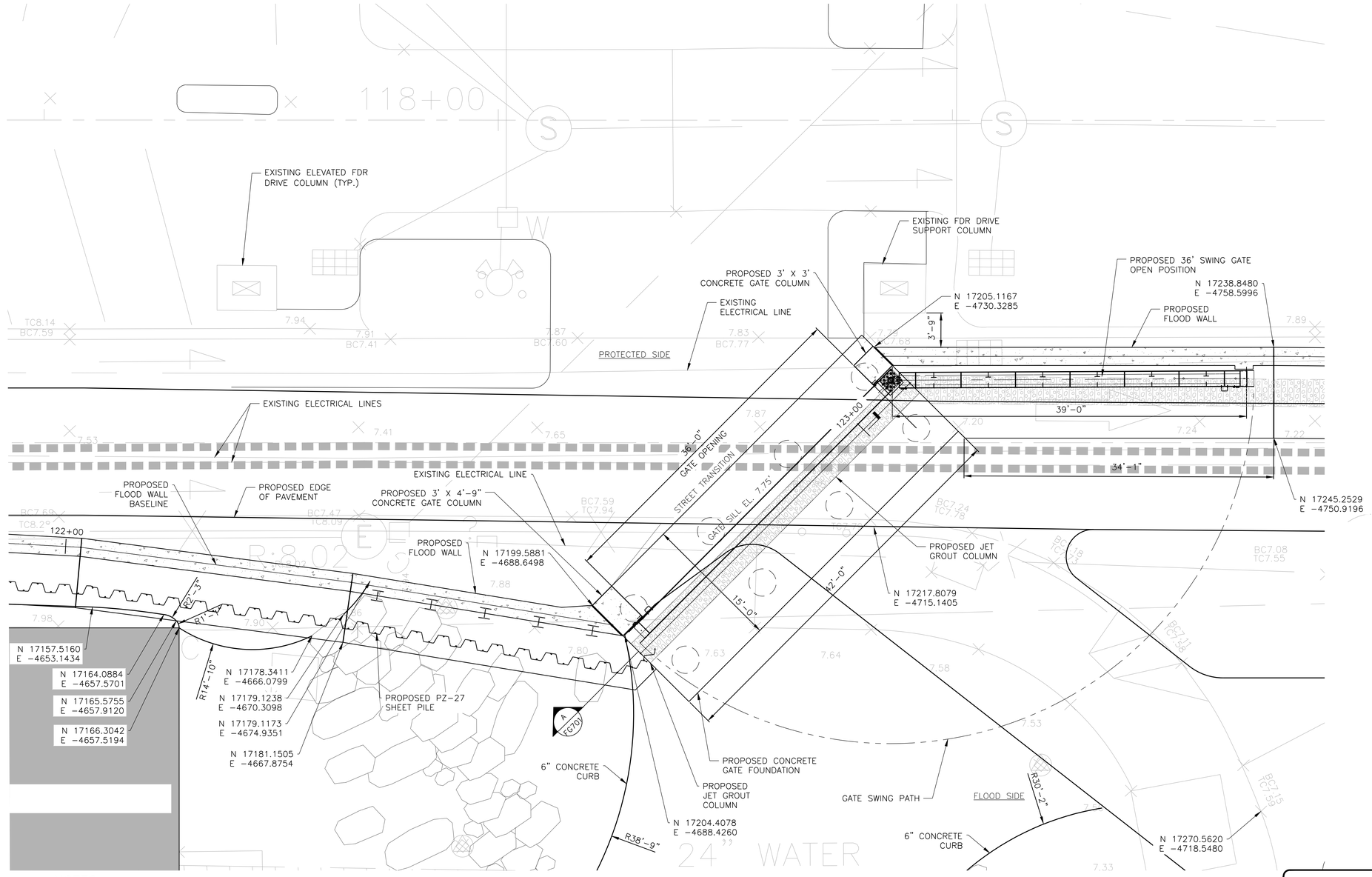

NOTES:

1. ALL ITEMS CALLED OUT AS EXISTING ARE TO REMAIN UNLESS NOTED OTHERWISE.
2. SEE SHEET SRXXX FOR STREET RESTORATION AND CURB GEOMETRY.
3. SEE SHEET PMP313 FOR PAVEMENT MARKINGS.
4. SEE SHEETS FG703 & FG704 FOR CONCRETE GATE FOUNDATION STRUCTURAL DETAILS.
5. SEE SHEET FG707 FOR PILE LAYOUT AND SCHEDULE.
6. SEE SHEETS FG705 & FG706 FOR STRUCTURAL GATE DETAILS.

STUYVESANT COVE NORTH GATE
PLAN

CONCEPTUAL

SUBMITTED DATE: 1/31/2019

0 5 10
SCALE: 1" = 5'

TOPOGRAPHIC SURVEY PREPARED BY: FOR SURVEYOR INFORMATION SEE SURVEY SET SU100 DRAWINGS SERIES

NO.	DATE	DESCRIPTIONS	BY	APPR'D

REVISIONS

FINAL DESIGN SUBMITTED BY: AKRF KSE — The AKRF-KSE JV

FINAL DESIGN PREPARED BY: ARCADIS — ARCADIS OF NEW YORK, INC. — NAME OF CONSULTANT

SIGNATURE

DATE

CITY OF NEW YORK
DEPARTMENT OF DESIGN + CONSTRUCTION
DIVISION OF INFRASTRUCTURE
BUREAU OF DESIGN

CLOSURE STRUCTURES
STUYVESANT COVE NORTH GATE
PLAN

ARCADIS — DRAWN BY

SANDRESM1-FG700-00.DWG — CADD FILE

INSTALLATION OF
EAST SIDE COASTAL RESILIENCY
BOROUGH OF MANHATTAN

CAPITAL PROJECT NO. SANDRESM1 1/31/19

SHEET 292 OF 811

FG700

CONSULTANT DESIGN

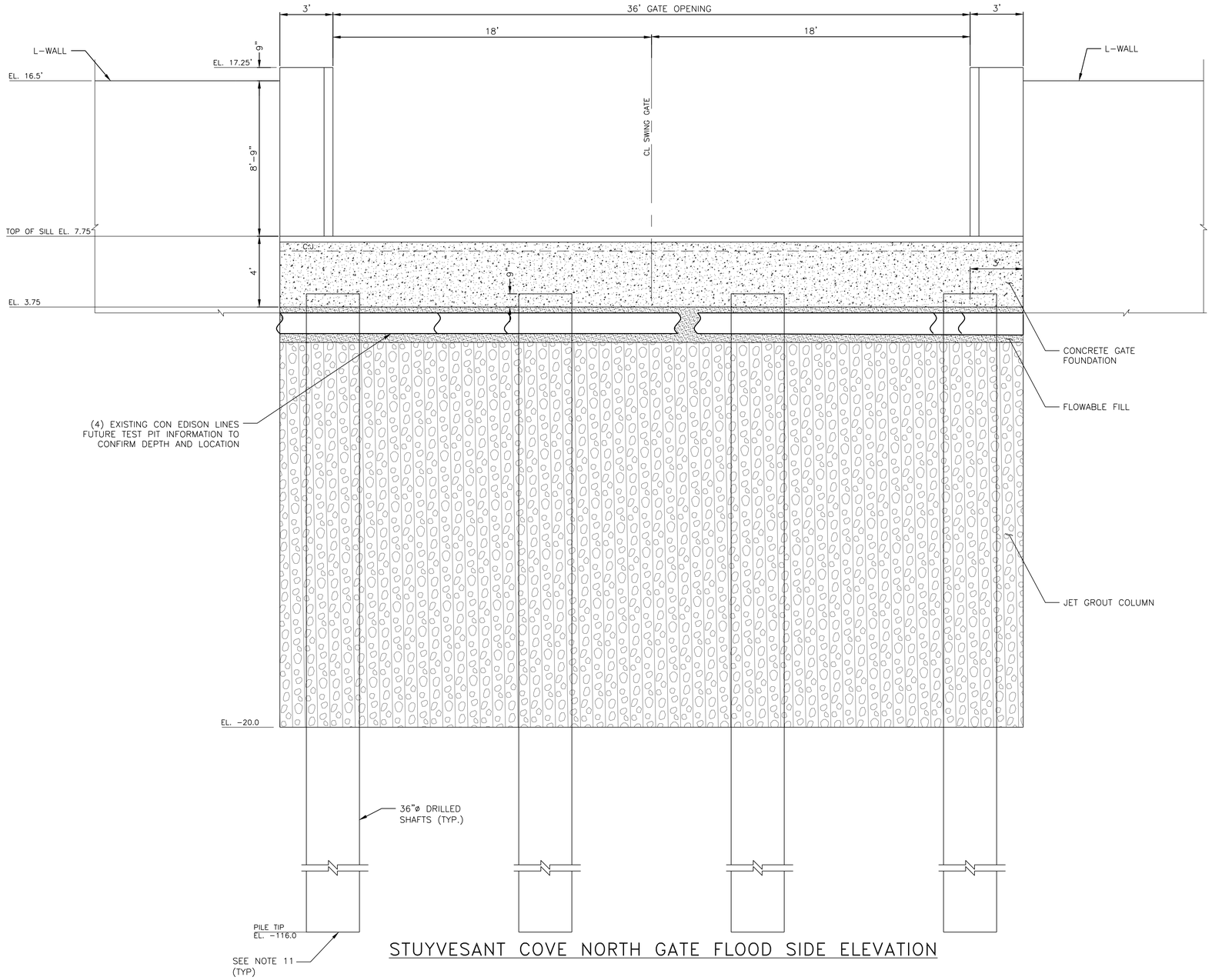

STUYVESANT COVE NORTH GATE FLOOD SIDE ELEVATION

SCALE: ⅜" = 1'-0"

CONCEPTUAL REDESIGN SUBMISSION 1/31/2019

LEGEND:

- FLOWABLE FILL
- JET GROUT

NOTES:

1. JET GROUTING SHALL BE PERFORMED WITH THE TRIPLE FLUID SYSTEM.
2. THE MINIMUM UNCONFINED COMPRESSIVE DESIGN STRENGTH OF THE SOILCRETE SHALL BE 500 PSI AT 3 DAYS AND 750 PSI AT 28 DAYS.
3. THE DESIGN PERMEABILITY OF THE SOILCRETE SHALL BE LESS THAN 1.0 X 10^{-6} CM/SEC.
4. USE VERTICAL AND ANGLED SLEEVE PIPES AS REQUIRED TO PERFORM JET GROUTING AROUND AND BELOW THE UTILITY LINES.
5. PRIOR TO PERFORMING JET GROUTING AND DRIVING SHEET PILES AT/NEAR EACH UTILITY LINE CROSSING LOCATION, PRE-TRENCH EXCAVATION TO LOCATE/EXPOSE THE UTILITY LINE (THEN BACKFILLING) AS REQUIRED.
6. FOR EXISTING UTILITY LINES LOCATED WITHIN THE LIMITS OF PROPOSED SOIL IMPROVEMENTS, SEE UTILITY CROSSING TYPE A, B, C AND D.
7. 14TH STREET CANARSIE L- TUNNEL.
8. ALL SPOT ELEVATIONS ARE EXISTING ELEVATIONS IN NAVD88.
9. EXCAVATABLE FILL SHALL HAVE A COMPRESSIVE STRENGTH OF 100PSI.
10. UTILITIES ARE SHOWN FOR INFORMATION PURPOSES ONLY AND ARE NOT EXACT LOCATIONS. CONTRACTOR SHALL EXCAVATE A 4 FT DEEP 10 FT WIDE TRENCH TO IDENTIFY UTILITY TYPE, DEPTH AND DIMENSIONS PRIOR TO BEGINNING SOIL IMPROVEMENT WORK. SUBMIT DETAILS OF ALL SITE OBSERVED UTILITIES TO THE CLIENT BEFORE BEGINNING WORK.
11. ALL PILES TIP SHOULD BE RESPECTIVE LEVEL OR TILL TO THE BED ROCK LEVEL.

TOPOGRAPHIC SURVEY PREPARED BY: FOR SURVEYOR INFORMATION SEE SURVEY SET SU100 DRAWINGS SERIES

CONCEPTUAL

SUBMITTED DATE: 1/31/2019

NO.	DATE	DESCRIPTIONS	BY	APPR'D

REVISIONS

FINAL DESIGN SUBMITTED BY: AKRF KSE — The AKRF-KSE JV

FINAL DESIGN PREPARED BY: ARCADIS — ARCADIS OF NEW YORK, INC. NAME OF CONSULTANT

SIGNATURE

DATE

CITY OF NEW YORK
DEPARTMENT OF DESIGN + CONSTRUCTION
DIVISION OF INFRASTRUCTURE
BUREAU OF DESIGN

CLOSURE STRUCTURES
STUYVESANT COVE NORTH GATE
SECTION

ARCADIS DRAWN BY

SANDRESM1-FG701-00.DWG CADD FILE

INSTALLATION OF
EAST SIDE COASTAL RESILIENCY
BOROUGH OF MANHATTAN

CAPITAL PROJECT NO. SANDRESM1 1/31/19

SHEET 293 OF 811

FG701

CONSULTANT DESIGN

CONCEPTUAL REDESIGN SUBMISSION 1/31/2019

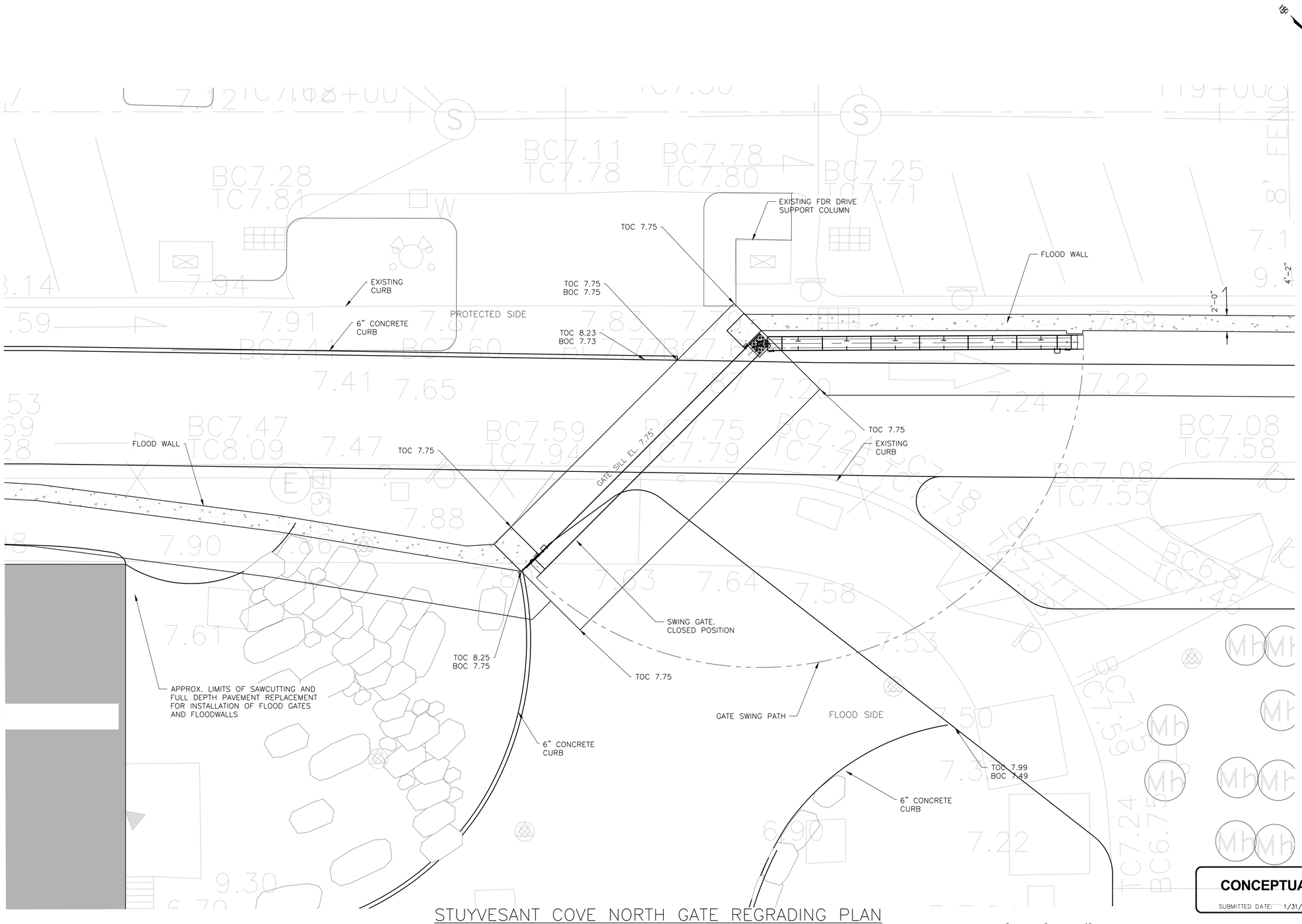

STUYVESANT COVE NORTH GATE REGRADING PLAN

SCALE: 1" = 5'

CONCEPTUAL

SUBMITTED DATE: 1/31/2019

TOPOGRAPHIC SURVEY PREPARED BY: FOR SURVEYOR
INFORMATION SEE SURVEY SET SU100 DRAWINGS SERIES

NO.	DATE	DESCRIPTIONS	BY	APPR'D

REVISIONS

FINAL DESIGN SUBMITTED BY: AKRF KSE — The AKRF-KSE JV

FINAL DESIGN PREPARED BY: ARCADIS — ARCADIS OF NEW YORK, INC. NAME OF CONSULTANT

SIGNATURE

DATE

CITY OF NEW YORK
DEPARTMENT OF DESIGN + CONSTRUCTION
DIVISION OF INFRASTRUCTURE
BUREAU OF DESIGN

CLOSURE STRUCTURES
STUYVESANT COVE NORTH GATE
REGRADING OVERALL PLAN

ARCADIS — DRAWN BY

SANDRESM1-FG702-00.DWG — CADD FILE

INSTALLATION OF
EAST SIDE COASTAL RESILIENCY
BOROUGH OF MANHATTAN

CAPITAL PROJECT NO. SANDRESM1 1/31/19

SHEET 294 OF 811

FG702

CONSULTANT DESIGN

CONCEPTUAL REDESIGN SUBMISSION 1/31/2019

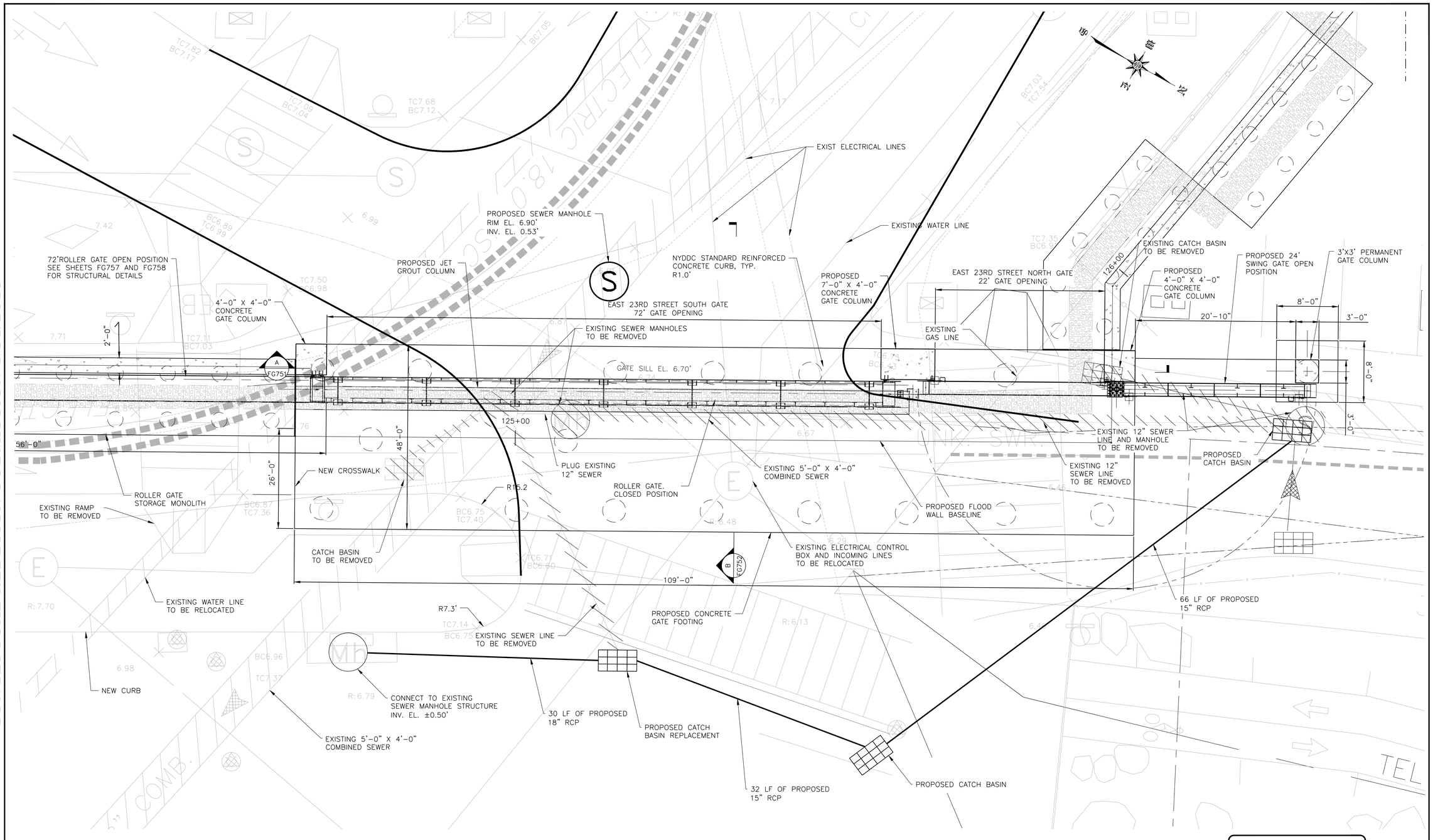

NOTES:

1. ALL ITEMS CALLED OUT AS EXISTING ARE TO REMAIN UNLESS NOTED OTHERWISE.
2. SEE SHEET SRXXX FOR STREET RESTORATION AND CURB GEOMETRY.
3. SEE SHEET PMP313 FOR PAVEMENT MARKINGS.
4. SEE SHEETS FG755 & FG756 FOR CONCRETE GATE FOUNDATION STRUCTURAL DETAILS.
5. SEE SHEET FG759 FOR PILE LAYOUT AND SCHEDULE.
6. SEE SHEETS FG757 & FG758 FOR STRUCTURAL GATE DETAILS.

EAST 23RD STREET SOUTH AND NORTH GATE PLAN

0 5 10
SCALE: 1" = 5'

CONCEPTUAL

SUBMITTED DATE: 1/31/2019

NO.	DATE	DESCRIPTIONS	BY	APPR'D

REVISIONS

FINAL DESIGN SUBMITTED BY: AKRF KSE — The AKRF-KSE JV

FINAL DESIGN PREPARED BY: ARCADIS — ARCADIS OF NEW YORK, INC. NAME OF CONSULTANT

SIGNATURE

DATE

CITY OF NEW YORK
DEPARTMENT OF DESIGN + CONSTRUCTION
DIVISION OF INFRASTRUCTURE
BUREAU OF DESIGN

CLOSURE STRUCTURES
EAST 23RD STREET SOUTH AND NORTH GATE PLAN

ARCADIS DRAWN BY

SANDRESM1-FG750-00.DWG CADD FILE

INSTALLATION OF
EAST SIDE COASTAL RESILIENCY
BOROUGH OF MANHATTAN

CAPITAL PROJECT NO. SANDRESM1 1/31/19

SHEET 300 OF 811

FG750

CONSULTANT DESIGN

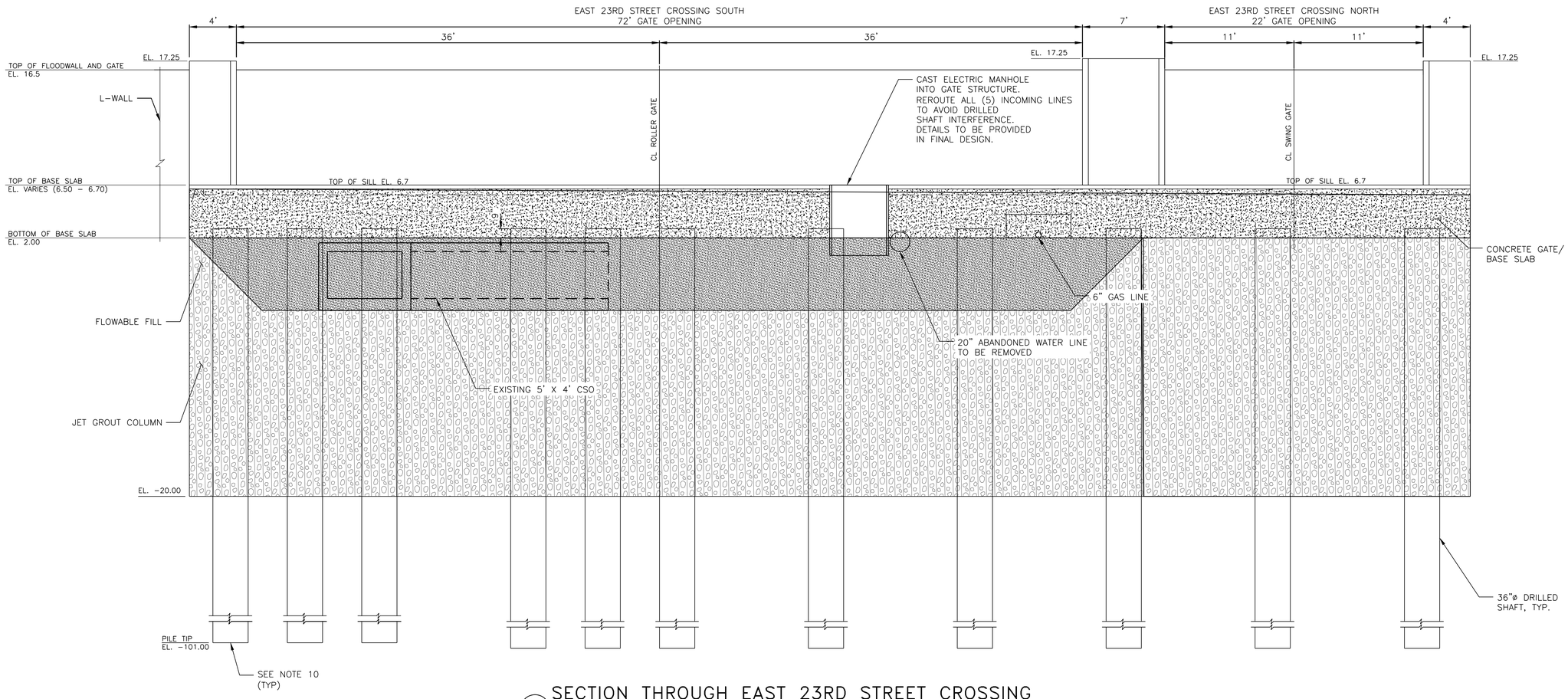

A
FG750

SECTION THROUGH EAST 23RD STREET CROSSING

SCALE 1/4" = 1'-0"

CONCEPTUAL REDESIGN SUBMISSION 1/31/2019

LEGEND:

- FLOWABLE FILL
- JET GROUT

TOPOGRAPHIC SURVEY PREPARED BY: FOR SURVEYOR INFORMATION SEE SURVEY SET SU100 DRAWINGS SERIES

NOTES:

1. JET GROUTING SHALL BE PERFORMED WITH THE TRIPLE FLUID SYSTEM.
2. THE MINIMUM UNCONFINED COMPRESSIVE DESIGN STRENGTH OF THE SOILCRETE SHALL BE 500 PSI AT 3 DAYS AND 750 PSI AT 28 DAYS.
3. THE DESIGN PERMEABILITY OF THE SOILCRETE SHALL BE LESS THAN 1.0 X 10^{-6} CM/SEC.
4. USE VERTICAL AND ANGLED SLEEVE PIPES AS REQUIRED TO PERFORM JET GROUTING AROUND AND BELOW THE UTILITY LINES.
5. PRIOR TO PERFORMING JET GROUTING AND DRIVING SHEET PILES AT/NEAR EACH UTILITY LINE CROSSING LOCATION, PRE-TRENCH EXCAVATION TO LOCATE/EXPOSE THE UTILITY LINE (THEN BACKFILLING) AS REQUIRED.
6. FOR EXISTING UTILITY LINES LOCATED WITHIN THE LIMITS OF PROPOSED SOIL IMPROVEMENTS, SEE UTILITY CROSSING TYPE A, B, C AND D.
7. ALL SPOT ELEVATIONS ARE EXISTING ELEVATIONS IN NAVD88.
8. EXCAVATABLE FILL SHALL HAVE A COMPRESSIVE STRENGTH OF 100PSI.
9. UTILITIES ARE SHOWN FOR INFORMATION PURPOSES ONLY AND ARE NOT EXACT LOCATIONS. CONTRACTOR SHALL EXCAVATE A 4 FT DEEP 10 FT WIDE TRENCH TO IDENTIFY UTILITY TYPE, DEPTH AND DIMENSIONS PRIOR TO BEGINNING SOIL IMPROVEMENT WORK. SUBMIT DETAILS OF ALL SITE OBSERVED UTILITIES TO THE CLIENT BEFORE BEGINNING WORK.
10. ALL PILES TIP SHOULD BE RESPECTIVE LEVEL OR TILL TO THE BED ROCK LEVEL.

CONCEPTUAL

SUBMITTED DATE: 1/31/2019

NO.	DATE	DESCRIPTIONS	BY	APPR'D

REVISIONS

FINAL DESIGN SUBMITTED BY:
AKRF KSE
The AKRF-KSE JV

FINAL DESIGN PREPARED BY:
ARCADIS
ARCADIS OF NEW YORK, INC.
NAME OF CONSULTANT

SIGNATURE
DATE

CITY OF NEW YORK
DEPARTMENT OF DESIGN + CONSTRUCTION
DIVISION OF INFRASTRUCTURE
BUREAU OF DESIGN

CLOSURE STRUCTURES
EAST 23RD STREET CROSSING
ELEVATION

ARCADIS
DRAWN BY

SANDRESM1-FG751-00.DWG
CADD FILE

INSTALLATION OF
EAST SIDE COASTAL RESILIENCY
BOROUGH OF MANHATTAN

CAPITAL PROJECT NO. SANDRESM1 1/31/19

SHEET 301 OF 811

FG751

CONSULTANT DESIGN

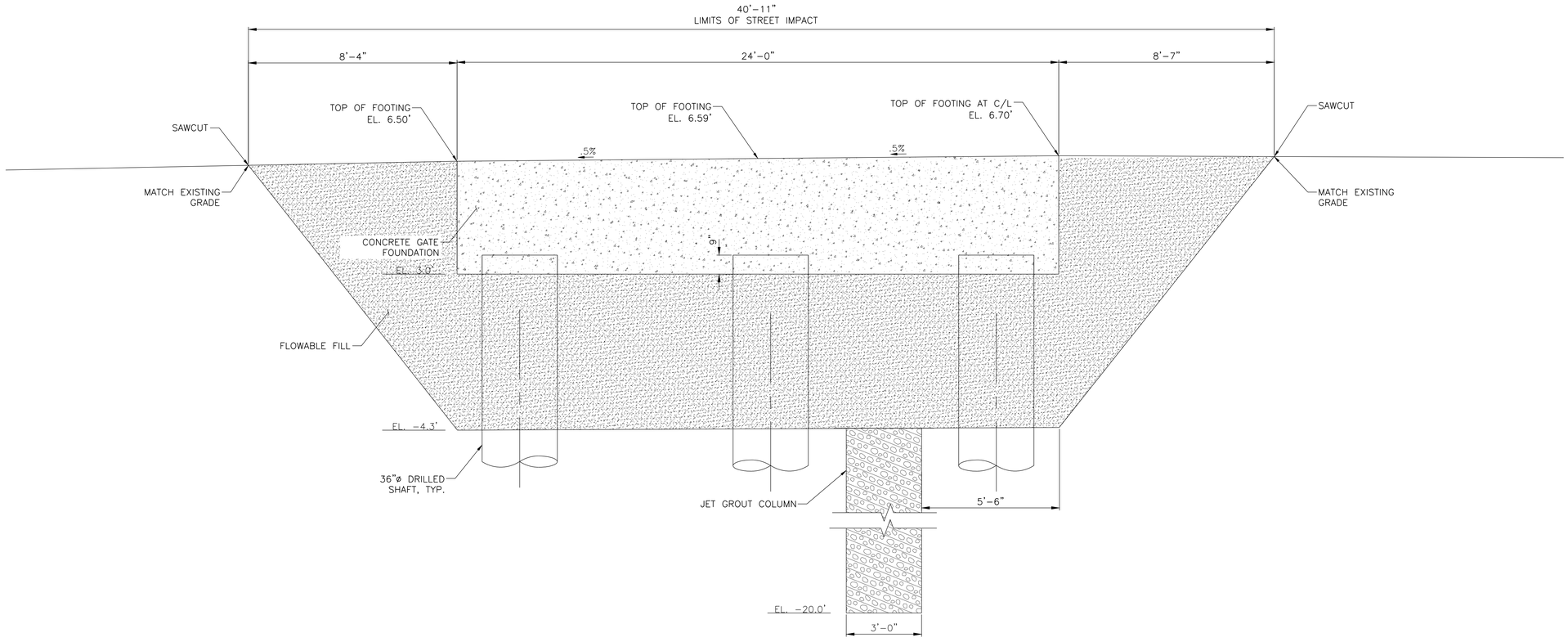

B
FG750

SECTION THROUGH EAST 23RD STREET CROSSING

SCALE 1/2" = 1'-0"

CONCEPTUAL REDESIGN SUBMISSION 1/31/2019

FOR REVIEW ONLY
SUBMITTED DATE: 1/31/2019

NO.	DATE	DESCRIPTIONS	BY	APPR'D

REVISIONS

TOPOGRAPHIC SURVEY PREPARED BY: FOR SURVEYOR INFORMATION SEE SURVEY SET SU100 DRAWINGS SERIES

FINAL DESIGN SUBMITTED BY:
AKRF KSE
The AKRF-KSE JV

FINAL DESIGN PREPARED BY:
ARCADIS
ARCADIS OF NEW YORK, INC.
NAME OF CONSULTANT
SIGNATURE
DATE

CITY OF NEW YORK
DEPARTMENT OF DESIGN + CONSTRUCTION
DIVISION OF INFRASTRUCTURE
BUREAU OF DESIGN

CLOSURE STRUCTURES
EAST 23RD STREET CROSSING
SECTIONS

ARCADIS
DRAWN BY
SANDRESM1-FG752-00.DWG
CADD FILE

INSTALLATION OF
EAST SIDE COASTAL RESILIENCY
BOROUGH OF MANHATTAN

CAPITAL PROJECT NO. SANDRESM1 1/31/19
SHEET 302 OF 811
FG752

CONSULTANT DESIGN

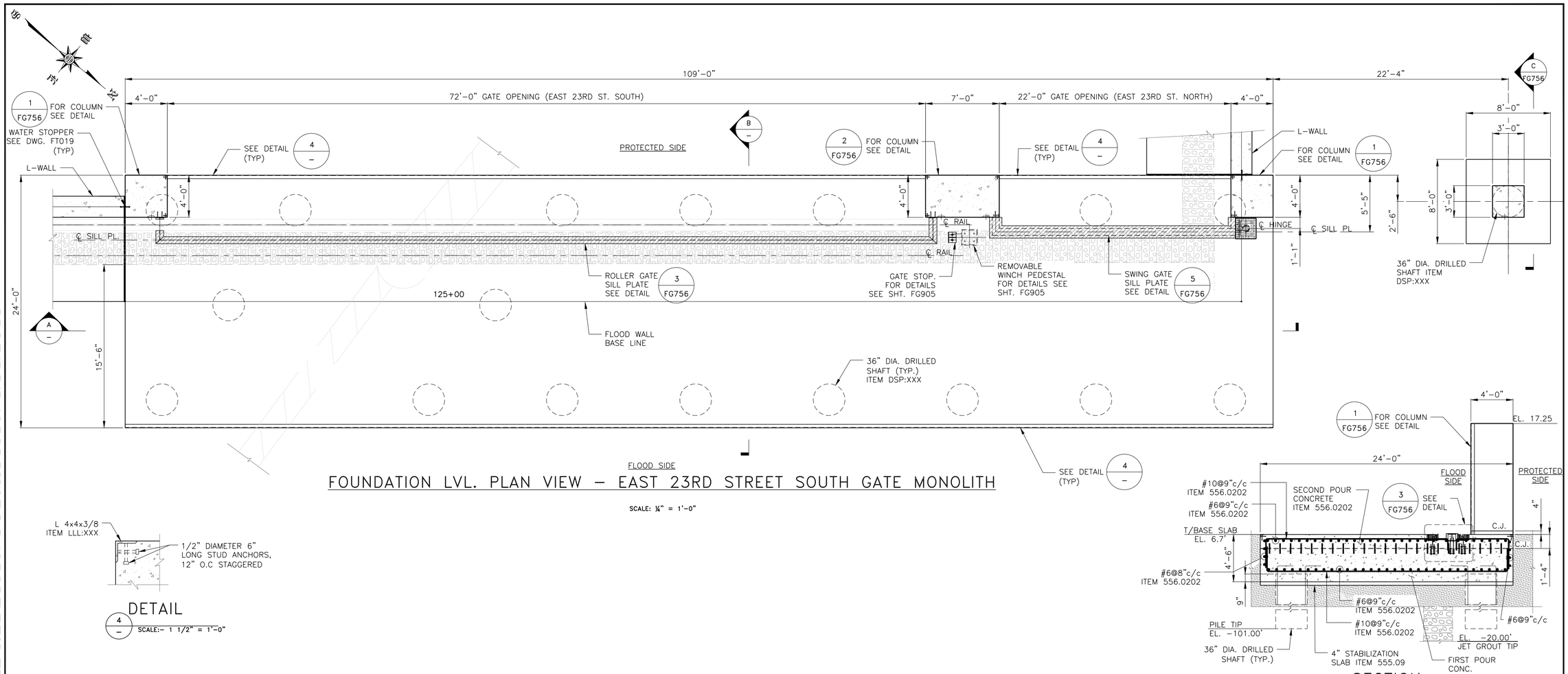

FOUNDATION LVL. PLAN VIEW – EAST 23RD STREET SOUTH GATE MONOLITH

SCALE: ¼" = 1'-0"

DETAIL

4 – SCALE:– 1 1/2" = 1'-0"

SECTION

B – SCALE:– 1/4" = 1'-0"

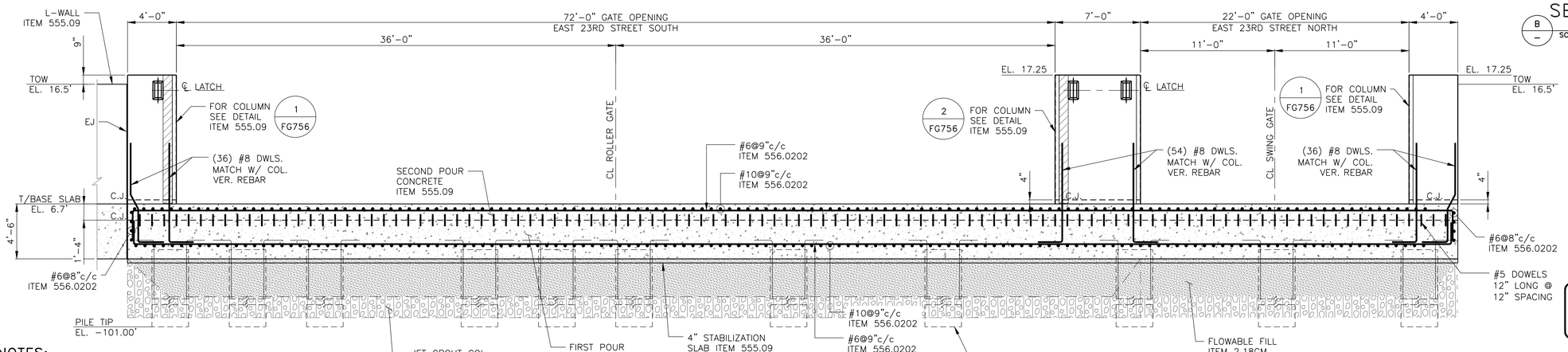

SECTION

A – SCALE:– 1/4" = 1'-0"

CONCEPTUAL

SUBMITTED DATE: 1/31/2019

CONCEPTUAL REDESIGN SUBMISSION 1/31/2019

NOTES:

1. FOR CONCRETE MONOLITH PILE LAYOUT AND SCHEDULE SEE DWG. FG761.
2. FOR ROLLER GATE DETAILS SEE DWG. FG757 & FG758.
3. FOR SWING GATE DETAILS SEE DWG. FG759 & FG760.
4. FOR EXISTING UTILITIES, SHEET PILE/JET GROUT DETAILS SEE DWG. FG750 TO FG753.
5. FOR TYPICAL DRILLED SHAFT PILE DETAILS SEE DWG. FS411.

NO.	DATE	DESCRIPTIONS	BY	APPR'D
		REVISIONS		

FINAL DESIGN SUBMITTED BY: AKRF KSE — The AKRF-KSE JV

FINAL DESIGN PREPARED BY: ARCADIS — ARCADIS OF NEW YORK, INC. NAME OF CONSULTANT — SIGNATURE — DATE

CITY OF NEW YORK
DEPARTMENT OF DESIGN + CONSTRUCTION
DIVISION OF INFRASTRUCTURE
BUREAU OF DESIGN

CLOSURE STRUCTURES
EAST 23RD STREET SOUTH & NORTH GATE
CONCRETE MONOLITH SHEET 1 OF 2

ARCADIS DRAWN BY — SANDRESM1-FG755-00.DWG CADD FILE

INSTALLATION OF
EAST SIDE COASTAL RESILIENCY
BOROUGH OF MANHATTAN

CAPITAL PROJECT NO. SANDRESM1 1/31/19 — SHEET 305 OF 811 — FG755

CONSULTANT DESIGN

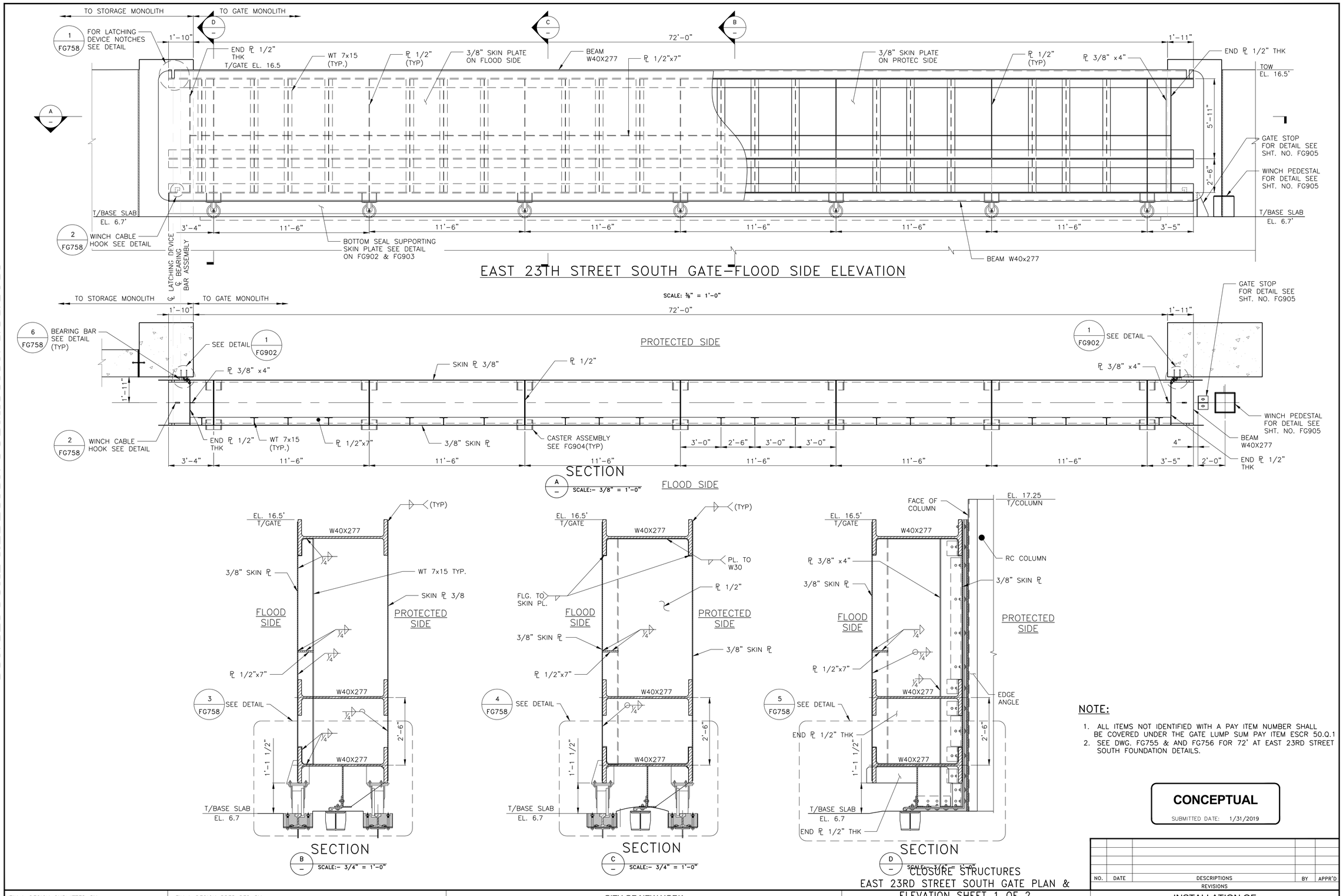

NOTE:

1. ALL ITEMS NOT IDENTIFIED WITH A PAY ITEM NUMBER SHALL BE COVERED UNDER THE GATE LUMP SUM PAY ITEM ESCR 50.Q.1
2. SEE DWG. FG755 & AND FG756 FOR 72' AT EAST 23RD STREET SOUTH FOUNDATION DETAILS.

CONCEPTUAL

SUBMITTED DATE: 1/31/2019

NO.	DATE	DESCRIPTIONS	BY	APPR'D
		REVISIONS		

CONCEPTUAL REDESIGN SUBMISSION 1/31/2019

FINAL DESIGN SUBMITTED BY: AKRF KSE — The AKRF-KSE JV

FINAL DESIGN PREPARED BY: ARCADIS — ARCADIS OF NEW YORK, INC. NAME OF CONSULTANT — SIGNATURE — DATE

CITY OF NEW YORK
DEPARTMENT OF DESIGN + CONSTRUCTION
DIVISION OF INFRASTRUCTURE
BUREAU OF DESIGN

CLOSURE STRUCTURES
EAST 23RD STREET SOUTH GATE PLAN & ELEVATION SHEET 1 OF 2

ARCADIS — DRAWN BY
SANDRESM1-FG757-00.DWG — CADD FILE

INSTALLATION OF
EAST SIDE COASTAL RESILIENCY
BOROUGH OF MANHATTAN

CAPITAL PROJECT NO. SANDRESM1 1/31/19

SHEET 307 OF 811 FG757

CONSULTANT DESIGN

CONCEPTUAL REDESIGN SUBMISSION 1/31/2019

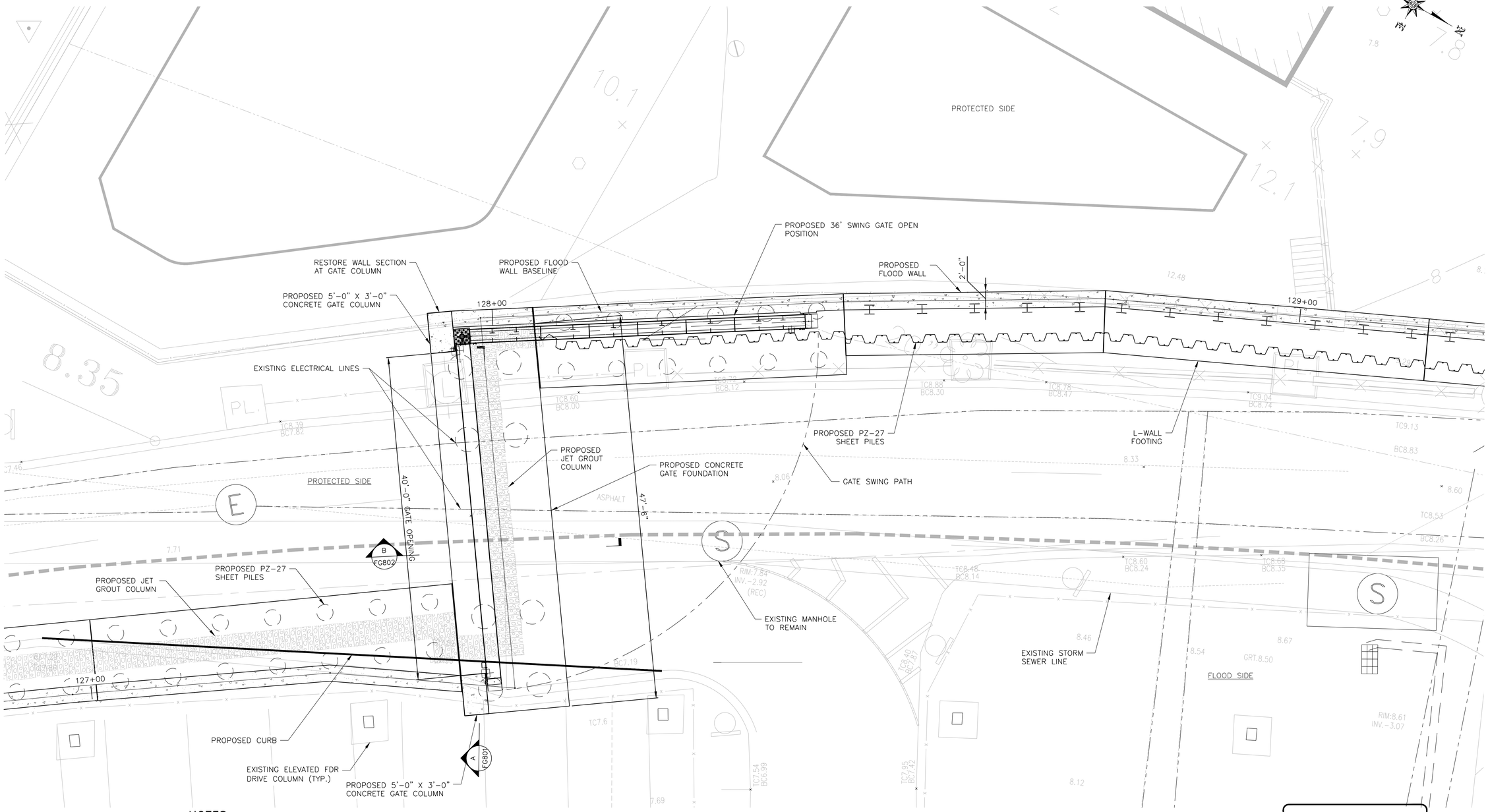

NOTES:

1. ALL ITEMS CALLED OUT AS EXISTING ARE TO REMAIN UNLESS NOTED OTHERWISE.
2. SEE SHEET SRXXX FOR STREET RESTORATION AND CURB GEOMETRY.
3. SEE SHEET PMP313 FOR PAVEMENT MARKINGS.
4. SEE SHEETS FG805 & FG806 FOR CONCRETE GATE FOUNDATION STRUCTURAL DETAILS.
5. SEE SHEET FG810 FOR PILE LAYOUT AND SCHEDULE.
6. SEE SHEETS FG807 TO FG809 FOR STRUCTURAL GATE DETAILS.

TOPOGRAPHIC SURVEY PREPARED BY: FOR SURVEYOR INFORMATION SEE SURVEY SET SU100 DRAWINGS SERIES

WEST SERVICE ROAD SWING GATE PLAN

0 5 10
SCALE: 1" = 5'

CONCEPTUAL

SUBMITTED DATE: 1/31/2019

NO.	DATE	DESCRIPTIONS	BY	APPR'D

REVISIONS

FINAL DESIGN SUBMITTED BY: AKRF KSE — The AKRF-KSE JV

FINAL DESIGN PREPARED BY: ARCADIS — ARCADIS OF NEW YORK, INC. NAME OF CONSULTANT

SIGNATURE

DATE

CITY OF NEW YORK
DEPARTMENT OF DESIGN + CONSTRUCTION
DIVISION OF INFRASTRUCTURE
BUREAU OF DESIGN

CLOSURE STRUCTURES
WEST SERVICE ROAD CROSSING
PLAN

ARCADIS — DRAWN BY
SANDRESM1-FG800-00.DWG — CADD FILE

INSTALLATION OF
EAST SIDE COASTAL RESILIENCY
BOROUGH OF MANHATTAN

CAPITAL PROJECT NO. SANDRESM1 1/31/19

SHEET 312 OF 811

FG800

CONSULTANT DESIGN

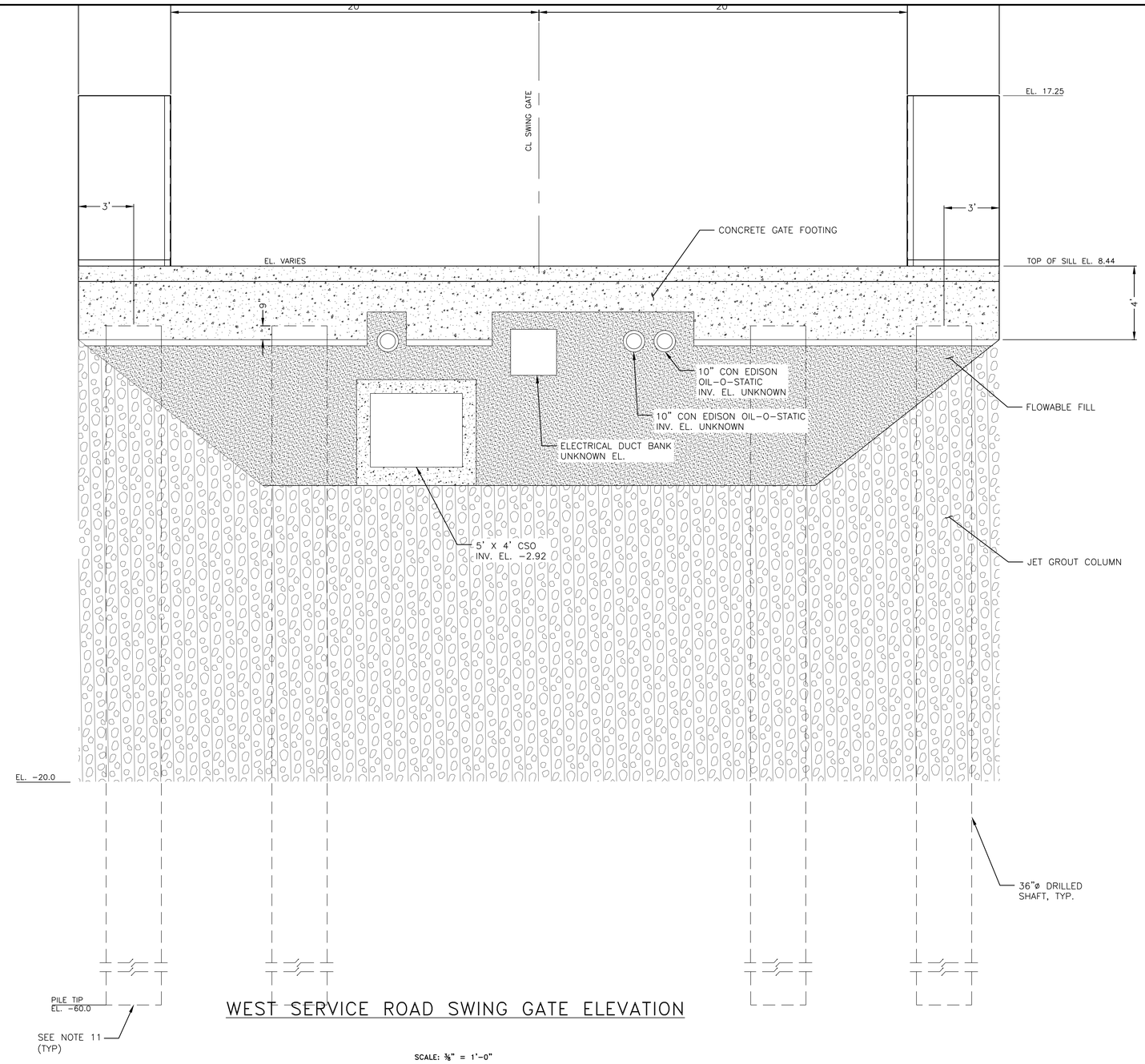

WEST SERVICE ROAD SWING GATE ELEVATION

SCALE: ⅜" = 1'-0"

CONCEPTUAL REDESIGN SUBMISSION 1/31/2019

LEGEND:

FLOWABLE FILL

JET GROUT

TOPOGRAPHIC SURVEY PREPARED BY: FOR SURVEYOR INFORMATION SEE SURVEY SET SU100 DRAWINGS SERIES

NOTES:

1. JET GROUTING SHALL BE PERFORMED WITH THE TRIPLE FLUID SYSTEM.
2. THE MINIMUM UNCONFINED COMPRESSIVE DESIGN STRENGTH OF THE SOILCRETE SHALL BE 500 PSI AT 3 DAYS AND 750 PSI AT 28 DAYS.
3. THE DESIGN PERMEABILITY OF THE SOILCRETE SHALL BE LESS THAN 1.0 X 10^{-6} CM/SEC.
4. USE VERTICAL AND ANGLED SLEEVE PIPES AS REQUIRED TO PERFORM JET GROUTING AROUND AND BELOW THE UTILITY LINES.
5. PRIOR TO PERFORMING JET GROUTING AND DRIVING SHEET PILES AT/NEAR EACH UTILITY LINE CROSSING LOCATION, PRE-TRENCH EXCAVATION TO LOCATE/EXPOSE THE UTILITY LINE (THEN BACKFILLING) AS REQUIRED.
6. FOR EXISTING UTILITY LINES LOCATED WITHIN THE LIMITS OF PROPOSED SOIL IMPROVEMENTS, SEE UTILITY CROSSING TYPE A, B, C AND D.
7. 14TH STREET CANARSIE L- TUNNEL.
8. ALL SPOT ELEVATIONS ARE EXISTING ELEVATIONS IN NAVD88.
9. EXCAVATABLE FILL SHALL HAVE A COMPRESSIVE STRENGTH OF 100PSI.
10. UTILITIES ARE SHOWN FOR INFORMATION PURPOSES ONLY AND ARE NOT EXACT LOCATIONS. CONTRACTOR SHALL EXCAVATE A 4 FT DEEP 10 FT WIDE TRENCH TO IDENTIFY UTILITY TYPE, DEPTH AND DIMENSIONS PRIOR TO BEGINNING SOIL IMPROVEMENT WORK. SUBMIT DETAILS OF ALL SITE OBSERVED UTILITIES TO THE CLIENT BEFORE BEGINNING WORK.
11. ALL PILES TIP SHOULD BE RESPECTIVE LEVELS OR TILL TO THE BED ROCK LEVEL.

CONCEPTUAL

SUBMITTED DATE: 1/31/2019

NO.	DATE	DESCRIPTIONS	BY	APPR'D
		REVISIONS		

FINAL DESIGN SUBMITTED BY: AKRF KSE — The AKRF-KSE JV

FINAL DESIGN PREPARED BY: ARCADIS — ARCADIS OF NEW YORK, INC. NAME OF CONSULTANT

SIGNATURE

DATE

CITY OF NEW YORK
DEPARTMENT OF DESIGN + CONSTRUCTION
DIVISION OF INFRASTRUCTURE
BUREAU OF DESIGN

CLOSURE STRUCTURES
WEST SERVICE ROAD CROSSING
ELEVATION

ARCADIS DRAWN BY

SANDRESM1-FG801-00.DWG CADD FILE

INSTALLATION OF
EAST SIDE COASTAL RESILIENCY
BOROUGH OF MANHATTAN

CAPITAL PROJECT NO. SANDRESM1 1/31/19

SHEET 313 OF 811

FG801

CONSULTANT DESIGN

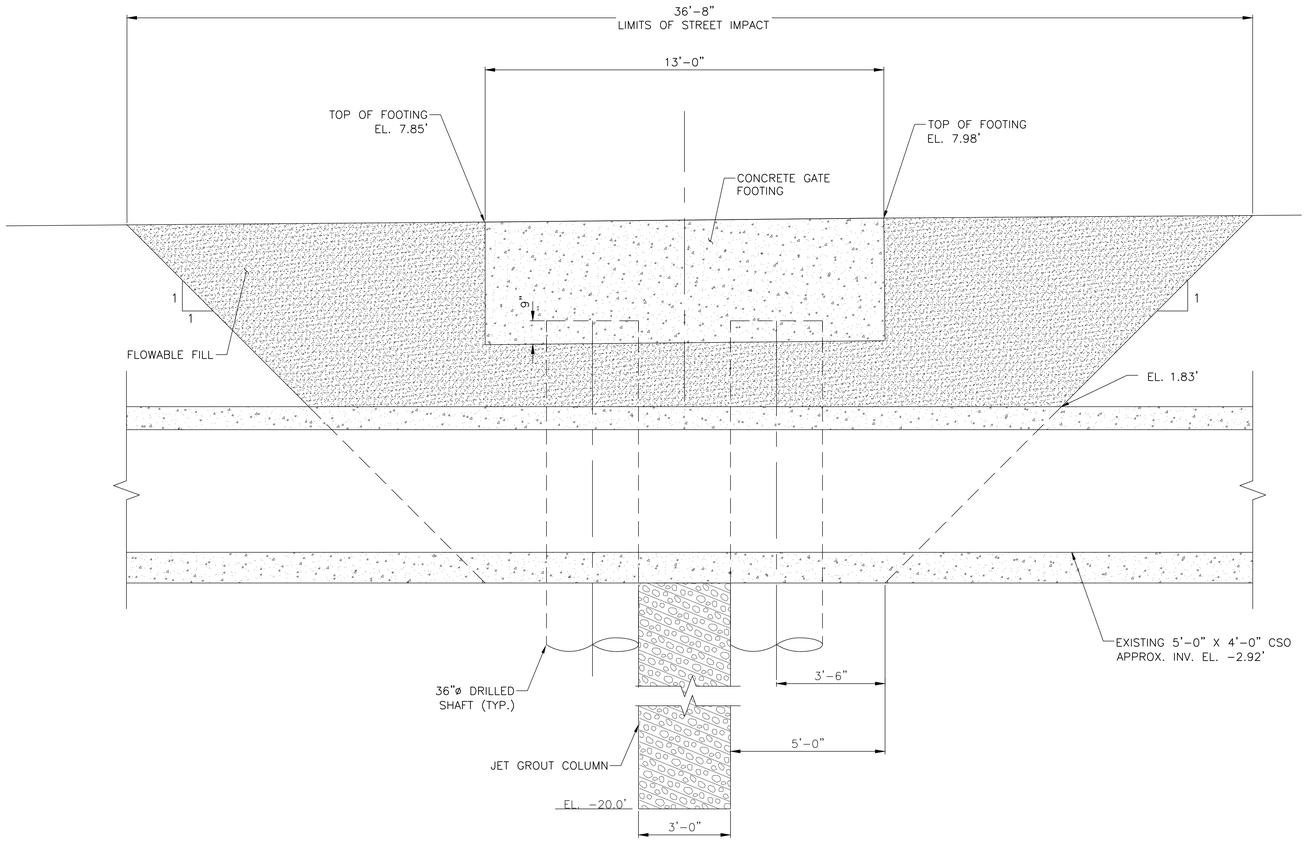

B
FG800

SECTION THROUGH GATE FOOTING AT CSO CROSSING

SCALE 1/2" = 1'-0"

CONCEPTUAL REDESIGN SUBMISSION 1/31/2019

CONCEPTUAL

SUBMITTED DATE: 1/31/2019

NOTE:

1. SEE DWG FG130, FG132, FG133 AND FG134 FOR REGRADING PLAN AND PROFILE.

NO.	DATE	DESCRIPTIONS	BY	APPR'D

REVISIONS

TOPOGRAPHIC SURVEY PREPARED BY: FOR SURVEYOR INFORMATION SEE SURVEY SET SU100 DRAWINGS SERIES

FINAL DESIGN SUBMITTED BY: AKRF KSE — The AKRF-KSE JV

FINAL DESIGN PREPARED BY: ARCADIS — ARCADIS OF NEW YORK, INC. NAME OF CONSULTANT

SIGNATURE

DATE

CITY OF NEW YORK
DEPARTMENT OF DESIGN + CONSTRUCTION
DIVISION OF INFRASTRUCTURE
BUREAU OF DESIGN

CLOSURE STRUCTURES
WEST SERVICE ROAD
SECTIONS

ARCADIS DRAWN BY

SANDRESM1-FG802-00.DWG CADD FILE

INSTALLATION OF
EAST SIDE COASTAL RESILIENCY
BOROUGH OF MANHATTAN

CAPITAL PROJECT NO. SANDRESM1 1/31/19

SHEET 314 OF 811

FG802

CONSULTANT DESIGN

CONCEPTUAL REDESIGN SUBMISSION 1/31/2019

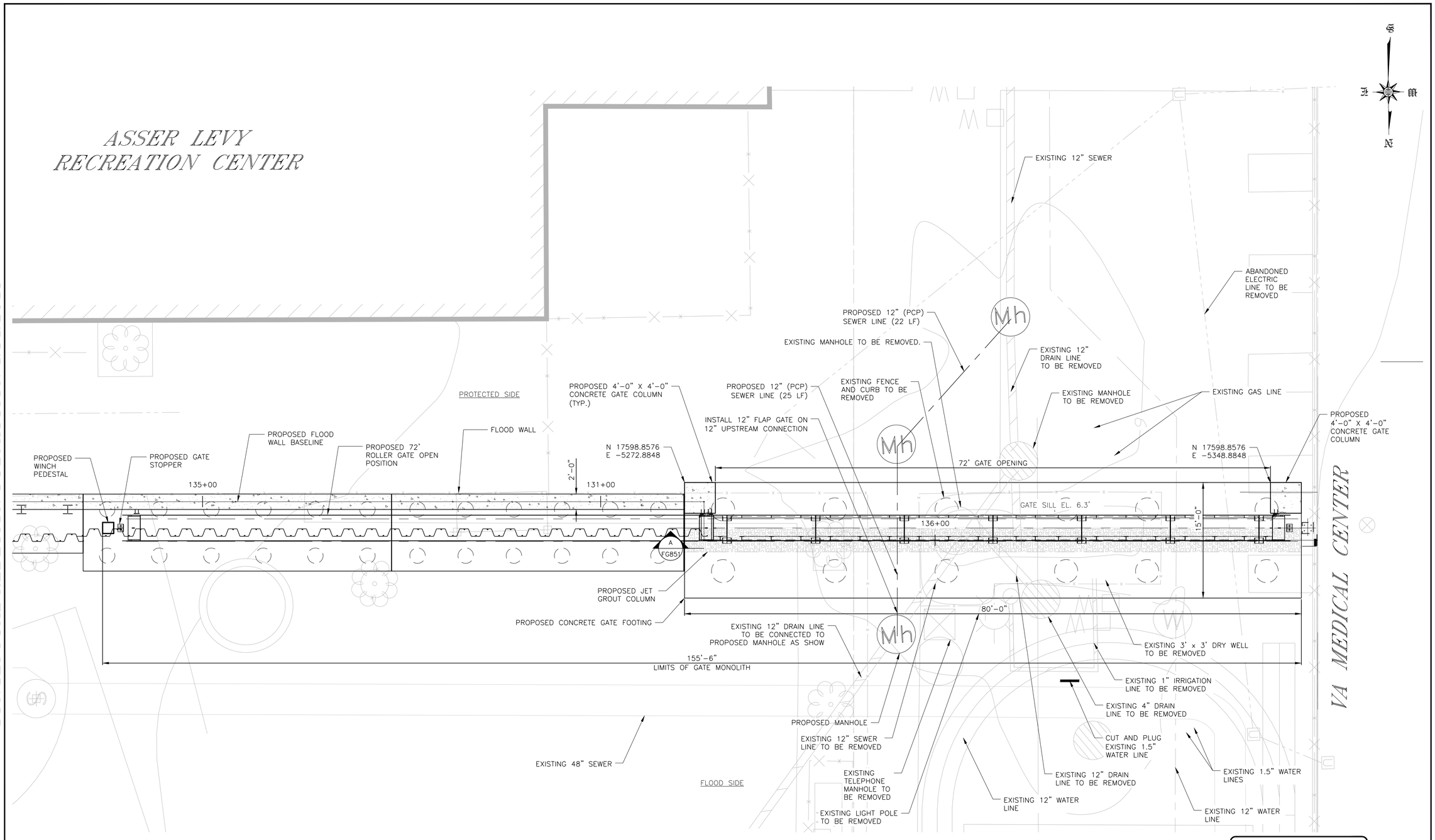

NOTES:

1. ALL ITEMS CALLED OUT AS EXISTING ARE TO REMAIN UNLESS NOTED OTHERWISE.
2. SEE SHEET SRXXX FOR STREET RESTORATION AND CURB GEOMETRY.
3. SEE SHEET PMP313 FOR PAVEMENT MARKINGS.
4. SEE SHEETS FG853 & FG854 FOR CONCRETE GATE FOUNDATION STRUCTURAL DETAILS.
5. SEE SHEET FG857 FOR PILE LAYOUT AND SCHEDULE.
6. SEE SHEETS FG855 TO FG856 FOR STRUCTURAL GATE DETAILS.

TOPOGRAPHIC SURVEY PREPARED BY: FOR SURVEYOR INFORMATION SEE SURVEY SET SU100 DRAWINGS SERIES

ASSER LEVY ROLLER GATE
GATE STRUCTURAL PLAN

0 5 10
SCALE: 1" = 5'

CONCEPTUAL

SUBMITTED DATE: 1/31/2019

NO.	DATE	DESCRIPTIONS	BY	APPR'D

REVISIONS

FINAL DESIGN SUBMITTED BY: AKRF KSE — The AKRF-KSE JV

FINAL DESIGN PREPARED BY: ARCADIS — ARCADIS OF NEW YORK, INC. NAME OF CONSULTANT

SIGNATURE

DATE

CITY OF NEW YORK
DEPARTMENT OF DESIGN + CONSTRUCTION
DIVISION OF INFRASTRUCTURE
BUREAU OF DESIGN

CLOSURE STRUCTURES
ASSER LEVY ROLLER GATE
PLAN

ARCADIS DRAWN BY

SANDRESM1-FG850-00.DWG CADD FILE

INSTALLATION OF
EAST SIDE COASTAL RESILIENCY
BOROUGH OF MANHATTAN

CAPITAL PROJECT NO. SANDRESM1 1/31/19

SHEET 323 OF 811

FG850

CONSULTANT DESIGN

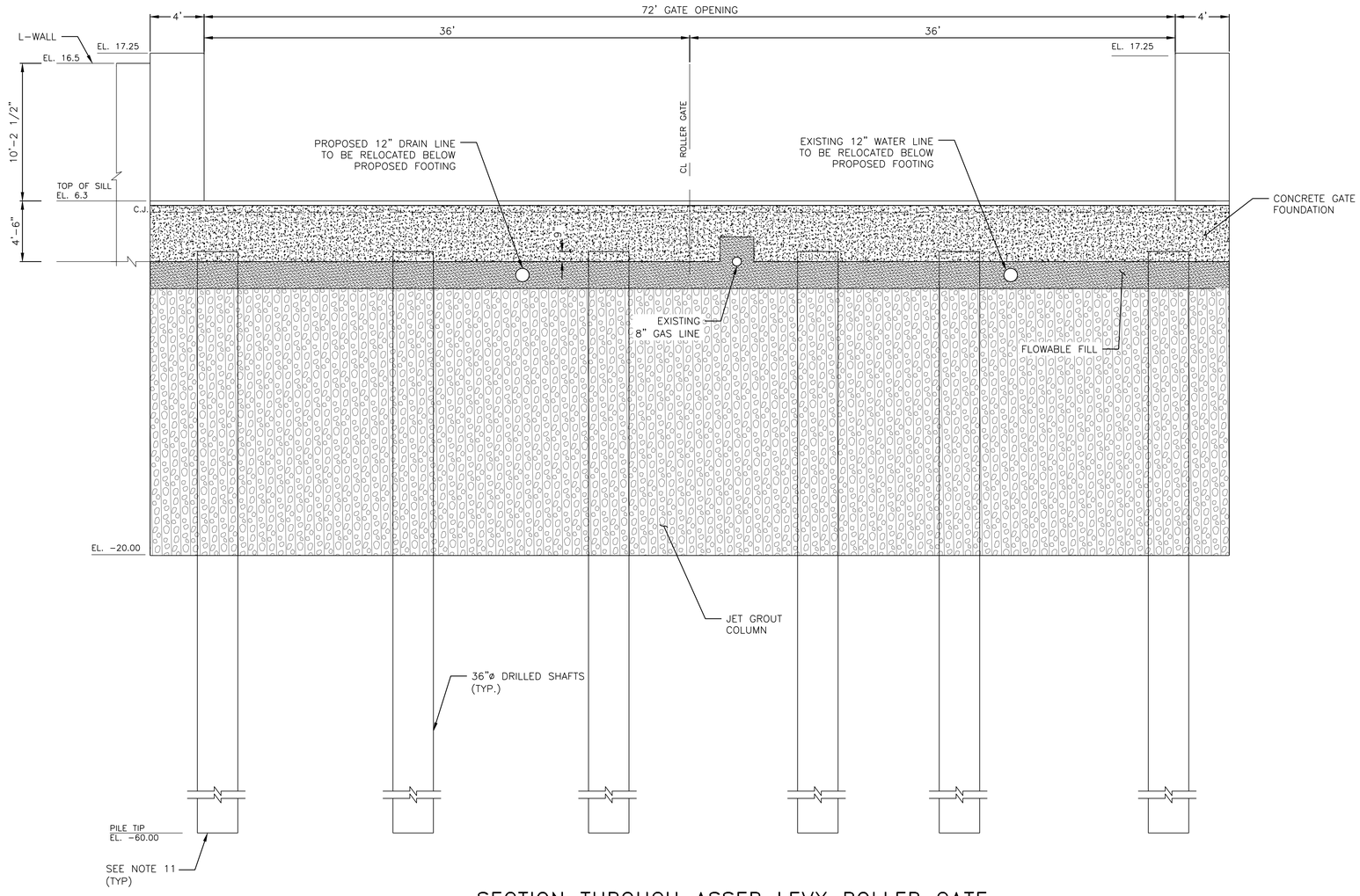

A
FG850

SECTION THROUGH ASSER LEVY ROLLER GATE

SCALE 1/4" = 1'-0"

CONCEPTUAL REDESIGN SUBMISSION 1/31/2019

LEGEND:

FLOWABLE FILL

JET GROUT

TOPOGRAPHIC SURVEY PREPARED BY: FOR SURVEYOR INFORMATION SEE SURVEY SET SU100 DRAWINGS SERIES

NOTES:

1. JET GROUTING SHALL BE PERFORMED WITH THE TRIPLE FLUID SYSTEM.
2. THE MINIMUM UNCONFINED COMPRESSIVE DESIGN STRENGTH OF THE SOILCRETE SHALL BE 500 PSI AT 3 DAYS AND 750 PSI AT 28 DAYS.
3. THE DESIGN PERMEABILITY OF THE SOILCRETE SHALL BE LESS THAN 1.0 X 10^{-6} CM/SEC.
4. USE VERTICAL AND ANGLED SLEEVE PIPES AS REQUIRED TO PERFORM JET GROUTING AROUND AND BELOW THE UTILITY LINES.
5. PRIOR TO PERFORMING JET GROUTING AND DRIVING SHEET PILES AT/NEAR EACH UTILITY LINE CROSSING LOCATION, PRE-TRENCH EXCAVATION TO LOCATE/EXPOSE THE UTILITY LINE (THEN BACKFILLING) AS REQUIRED.
6. FOR EXISTING UTILITY LINES LOCATED WITHIN THE LIMITS OF PROPOSED SOIL IMPROVEMENTS, SEE UTILITY CROSSING TYPE A, B, C AND D.
7. ALL SPOT ELEVATIONS ARE EXISTING ELEVATIONS IN NAVD88.
8. EXCAVATABLE FILL SHALL HAVE A COMPRESSIVE STRENGTH OF 100PSI.
9. UTILITIES ARE SHOWN FOR INFORMATION PURPOSES ONLY AND ARE NOT EXACT LOCATIONS. CONTRACTOR SHALL EXCAVATE A 4 FT DEEP 10 FT WIDE TRENCH TO IDENTIFY UTILITY TYPE, DEPTH AND DIMENSIONS PRIOR TO BEGINNING SOIL IMPROVEMENT WORK. SUBMIT DETAILS OF ALL SITE OBSERVED UTILITIES TO THE CLIENT BEFORE BEGINNING WORK.
10. VA MEDICAL CENTER FLOODWALL NOT SHOWN.
11. ALL PILES TIP SHOULD BE RESPECTIVE LEVEL OR TILL TO THE BED ROCK LEVEL.

CONCEPTUAL

SUBMITTED DATE: 1/31/2019

NO.	DATE	DESCRIPTIONS	BY	APPR'D

REVISIONS

FINAL DESIGN SUBMITTED BY: AKRF KSE — The AKRF-KSE JV

FINAL DESIGN PREPARED BY: ARCADIS — ARCADIS OF NEW YORK, INC. NAME OF CONSULTANT

SIGNATURE

DATE

CITY OF NEW YORK
DEPARTMENT OF DESIGN + CONSTRUCTION
DIVISION OF INFRASTRUCTURE
BUREAU OF DESIGN

CLOSURE STRUCTURES
ASSER LEVY ROLLER GATE
ELEVATION

ARCADIS DRAWN BY

SANDRESM1-FG851-00.DWG CADD FILE

INSTALLATION OF
EAST SIDE COASTAL RESILIENCY
BOROUGH OF MANHATTAN

CAPITAL PROJECT NO. SANDRESM1 1/31/19

SHEET 324 OF 811

FG851

CONSULTANT DESIGN

CONCEPTUAL REDESIGN SUBMISSION 1/31/2019

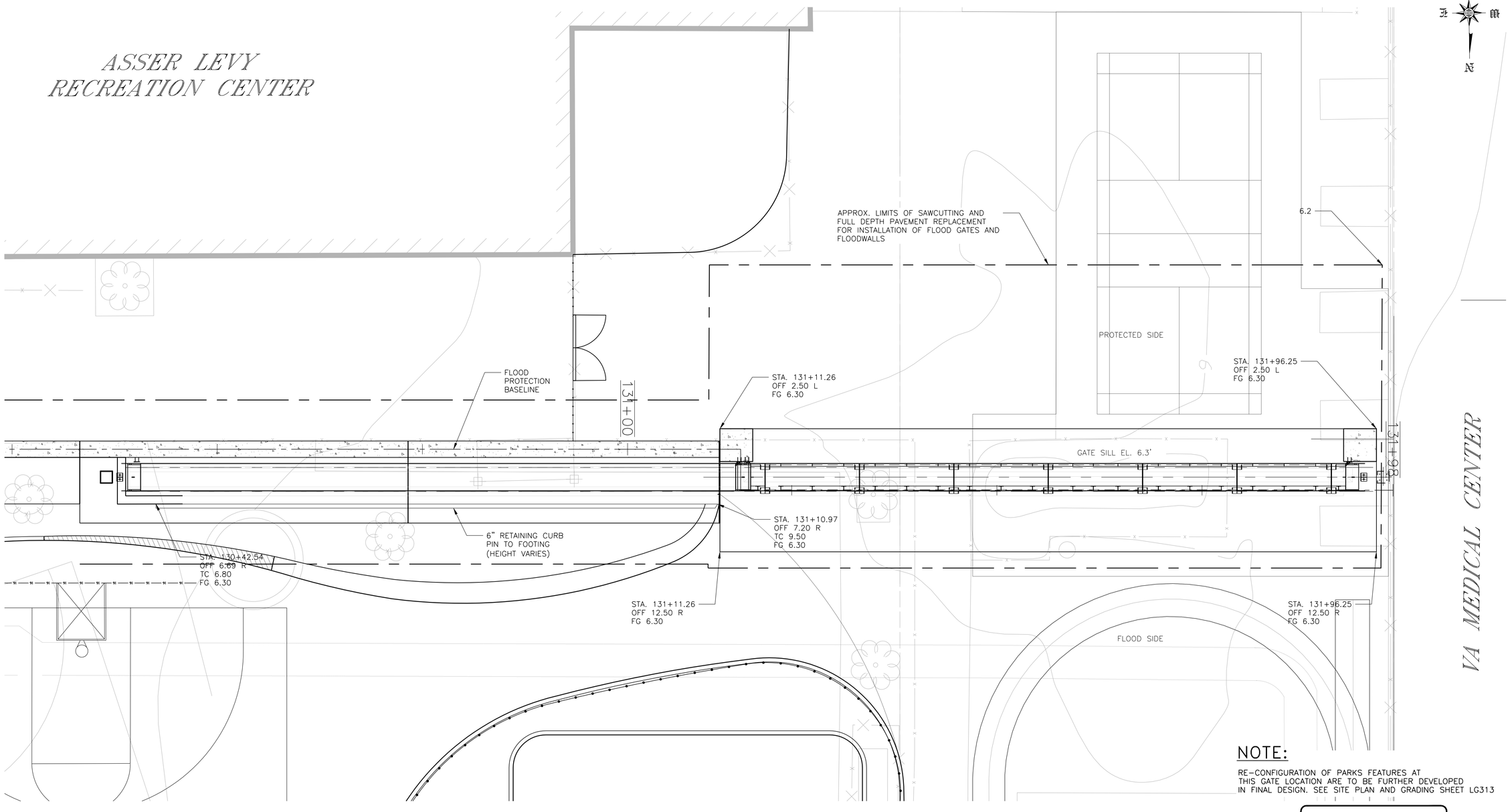

NOTE:

RE-CONFIGURATION OF PARKS FEATURES AT THIS GATE LOCATION ARE TO BE FURTHER DEVELOPED IN FINAL DESIGN. SEE SITE PLAN AND GRADING SHEET LG313

CONCEPTUAL

SUBMITTED DATE: 1/31/2019

ASSER LEVY ROLLER GATE REGRADING PLAN

0 5 10
SCALE: 1" = 5'

TOPOGRAPHIC SURVEY PREPARED BY: FOR SURVEYOR INFORMATION SEE SURVEY SET SU100 DRAWINGS SERIES

NO.	DATE	DESCRIPTIONS	BY	APPR'D

REVISIONS

FINAL DESIGN SUBMITTED BY: AKRF KSE — The AKRF-KSE JV

FINAL DESIGN PREPARED BY: ARCADIS — ARCADIS OF NEW YORK, INC. NAME OF CONSULTANT

SIGNATURE

DATE

CITY OF NEW YORK
DEPARTMENT OF DESIGN + CONSTRUCTION
DIVISION OF INFRASTRUCTURE
BUREAU OF DESIGN

CLOSURE STRUCTURES
ASSER LEVY ROLLER GATE
REGRADING OVERALL PLAN

ARCADIS DRAWN BY

SANDRESM1-FG852-00.DWG CADD FILE

INSTALLATION OF
EAST SIDE COASTAL RESILIENCY
BOROUGH OF MANHATTAN

CAPITAL PROJECT NO. SANDRESM1 1/31/19

SHEET 325 OF 811

FG852

CONSULTANT DESIGN

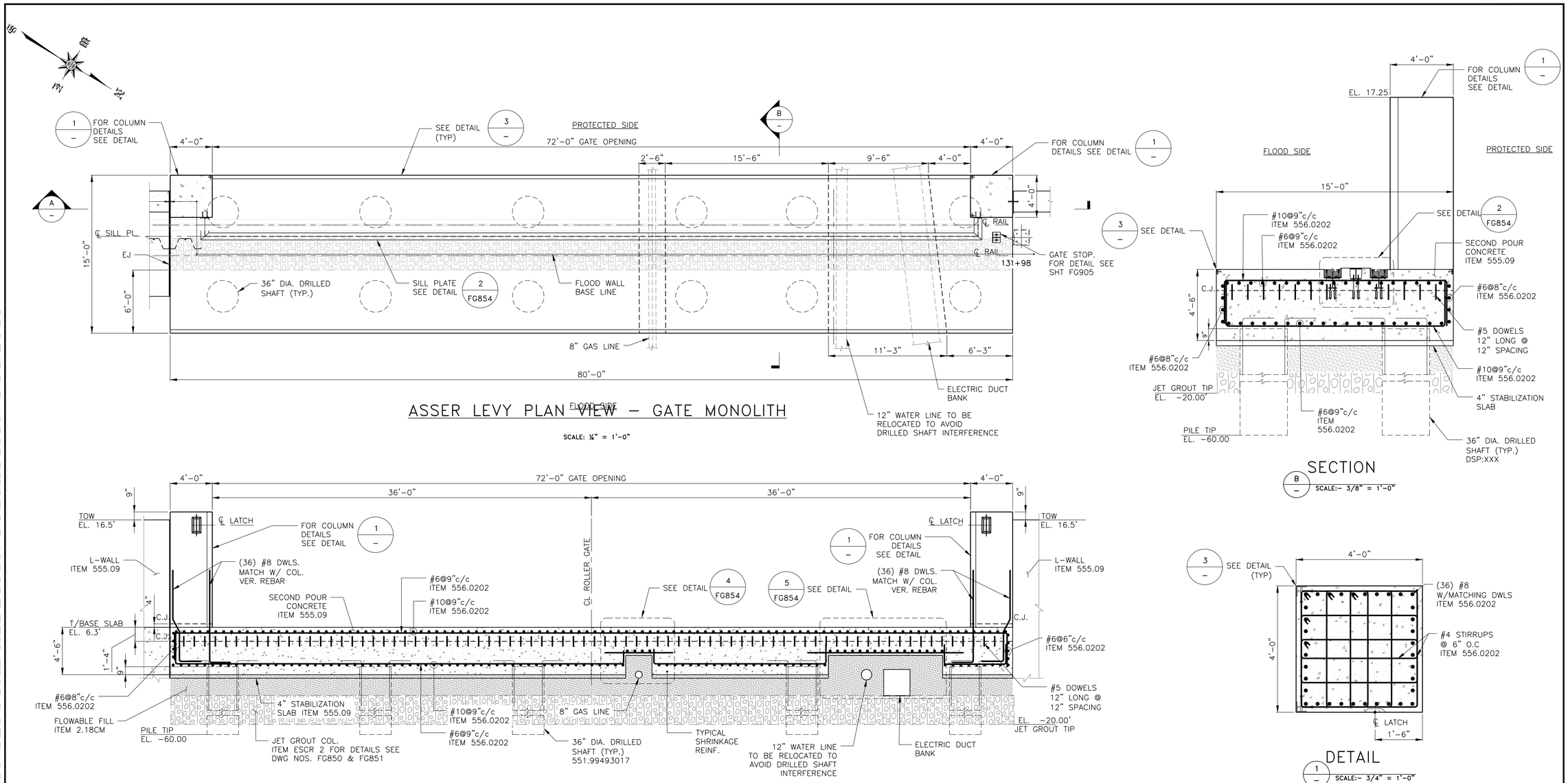

CONCEPTUAL REDESIGN SUBMISSION 1/31/2019

NOTES:

1. FOR CONCRETE MONOLITH PILE LAYOUT AND SCHEDULE SEE DWG. FG857.
2. FOR GATE DETAILS SEE DWG. FG855 & FG856.
3. FOR EXISTING UTILITIES, SHEET PILE/JET GROUT DETAILS SEE DWG. FG850 TO FG852.
4. FOR TYPICAL DRILLED SHAFT PILE DETAILS SEE DWG. FS411.
5. FOR LATCHING HOOK DETAILS SEE DWG. FG900 AND FG901.

CONCEPTUAL

SUBMITTED DATE: 1/31/2019

NO.	DATE	DESCRIPTIONS	BY	APPR'D

REVISIONS

FINAL DESIGN SUBMITTED BY: AKRF KSE — The AKRF-KSE JV

FINAL DESIGN PREPARED BY: ARCADIS — ARCADIS OF NEW YORK, INC. NAME OF CONSULTANT

SIGNATURE

DATE

CITY OF NEW YORK
DEPARTMENT OF DESIGN + CONSTRUCTION
DIVISION OF INFRASTRUCTURE
BUREAU OF DESIGN

CLOSURE STRUCTURES
ASSER LEVY GATE PLAYGROUND GATE
CONCRETE MONOLITH

ARCADIS DRAWN BY

SANDRESM1-FG853-00.DWG CADD FILE

INSTALLATION OF
EAST SIDE COASTAL RESILIENCY
BOROUGH OF MANHATTAN

CAPITAL PROJECT NO. SANDRESM1 1/31/19

SHEET 326 OF 811

FG853

CONSULTANT DESIGN