Appendix C1f
Preferred Alternative - Flood Protection
Cross Sections

TABLE OF CONTENTS

SHEET NO.	DRAWING NO.	SHEET TITLE
F600	SANDRESM1-F600-00.DWG	FLOOD PROTECTION CROSS SECTIONS REACH A
F601	SANDRESM1-F601-00.DWG	FLOOD PROTECTION CROSS SECTIONS REACH B
F602	SANDRESM1-F602-00.DWG	FLOOD PROTECTION CROSS SECTIONS REACH C
F610	SANDRESM1-F610-00.DWG	FLOOD PROTECTION CROSS SECTIONS REACH K
F611	SANDRESM1-F611-00.DWG	FLOOD PROTECTION CROSS SECTIONS REACH L
F612	SANDRESM1-F612-00.DWG	FLOOD PROTECTION CROSS SECTIONS REACH M
F613	SANDRESM1-F613-00.DWG	FLOOD PROTECTION CROSS SECTIONS REACH N SHEET 1 OF 2
F614	SANDRESM1-F614-00.DWG	FLOOD PROTECTION CROSS SECTIONS REACH N SHEET 2 OF 2
F615	SANDRESM1-F615-00.DWG	FLOOD PROTECTION CROSS SECTIONS REACH O
F616	SANDRESM1-F616-00.DWG	FLOOD PROTECTION CROSS SECTIONS REACH Q

CONCEPTUAL REDESIGN SUBMISSION 1/31/2019

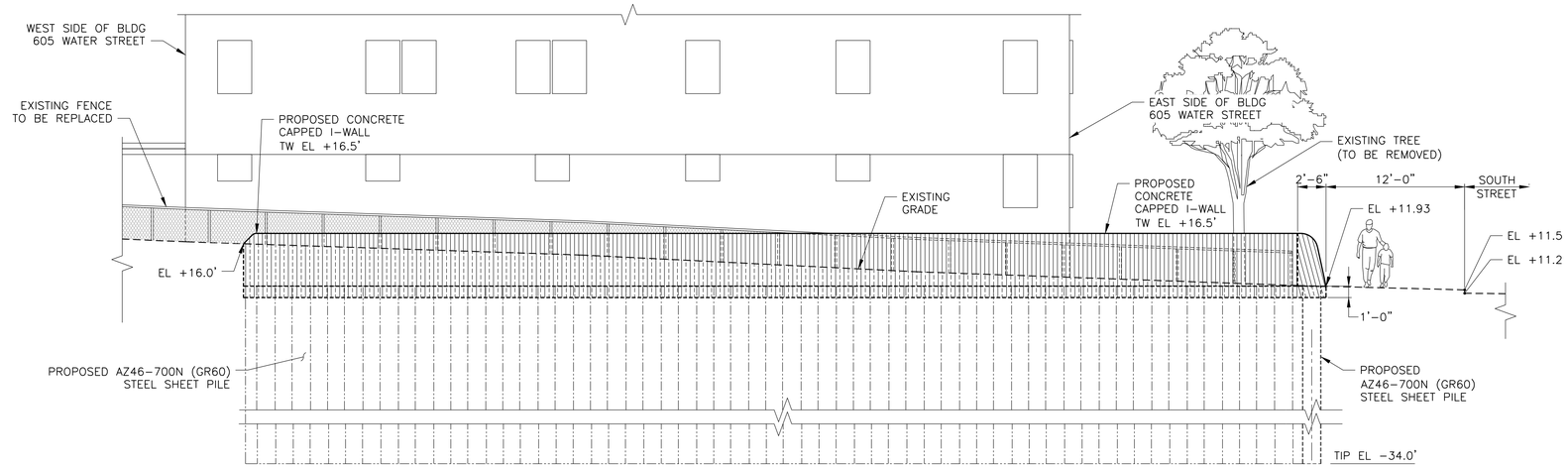

A1 F300 ELEVATION ALONG MONTGOMERY STREET
SCALE: 3/16" = 1'-0"

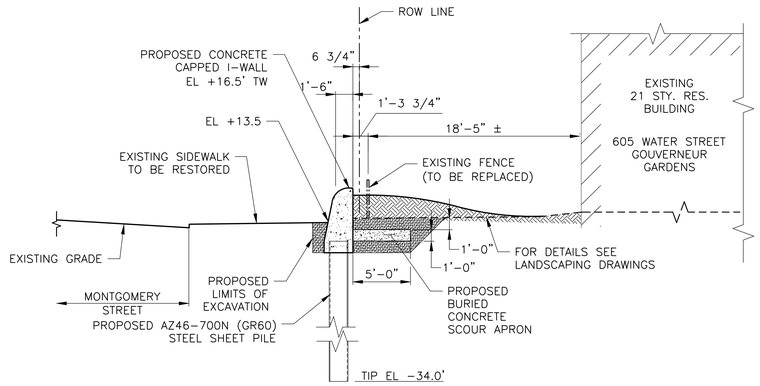

A2 F300 SECTION AT STA. 9+50
SCALE: 3/16" = 1'-0"

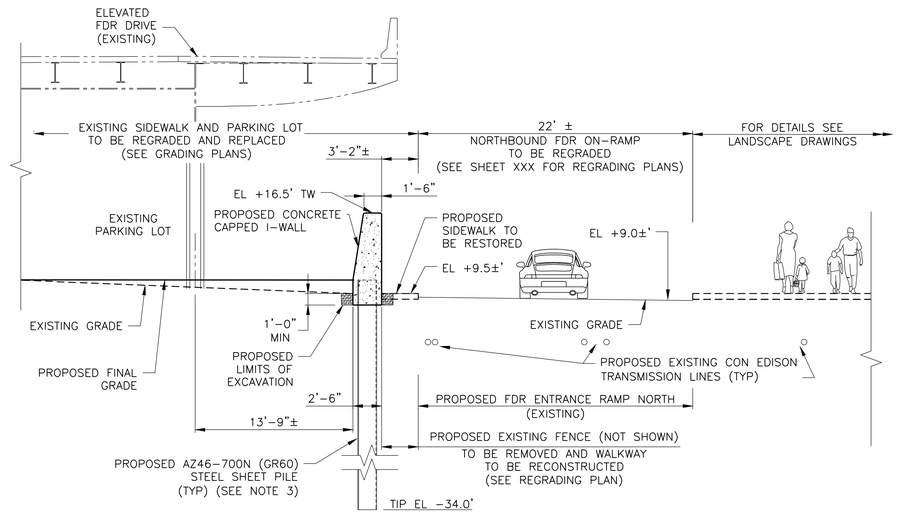

A3 F300 SECTION AT STA. 11+63
SCALE: 3/16" = 1'-0"

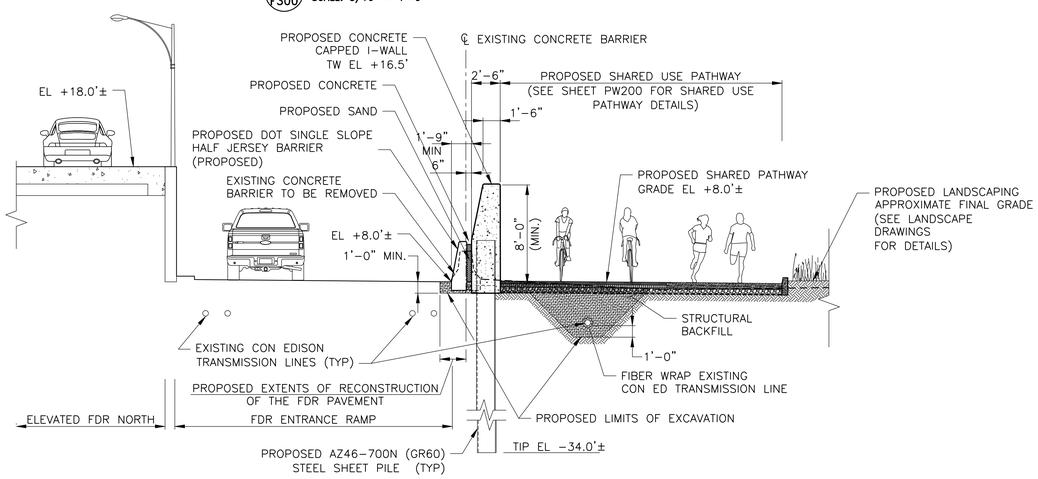

A4 F300 SECTION AT STA. 14+65
SCALE: 3/16" = 1'-0"

NOTES:

1. ALL ITEMS CALLED OUT AS EXISTING ARE TO REMAIN UNLESS NOTED OTHERWISE.
2. LOCATION OF ELECTRICAL LINES IS APPROXIMATE. IT IS BASED ON CON EDISON'S TRANSMISSION LINE X-REF DRAWING.
3. ONLY APPROXIMATE CON EDISON TRANSMISSION LINES ARE SHOWN. FOR OTHER UTILITIES IN THE PARK REFER TO THE ELECTRICAL AND PLUMBING PLANS.
4. OVERHEAD CLEARANCE RESTRICTIONS MIGHT REQUIRE THAT SHEETS BE INSTALLED IN SHORTER SEGMENTS AND BE WELDED TOGETHER.

CONCEPTUAL

SUBMITTED DATE: 1/31/2019

TOPOGRAPHIC SURVEY PREPARED BY: FOR SURVEYOR
INFORMATION SEE SURVEY SET SU100 DRAWINGS SERIES

NO.	DATE	DESCRIPTIONS	BY	APPR'D

REVISIONS

FINAL DESIGN SUBMITTED BY: AKRF KSE — The AKRF-KSE JV

FINAL DESIGN PREPARED BY: ch2m — CH2M HILL NEW YORK, INC. NAME OF CONSULTANT — SIGNATURE — DATE

CITY OF NEW YORK
DEPARTMENT OF DESIGN + CONSTRUCTION
DIVISION OF INFRASTRUCTURE
BUREAU OF DESIGN

FLOOD PROTECTION
CROSS SECTIONS
REACH A

CH2M DRAWN BY — SANDRESM1-F600-00.DWG CADD FILE

INSTALLATION OF
EAST SIDE COASTAL RESILIENCY
BOROUGH OF MANHATTAN

CAPITAL PROJECT NO. SANDRESM1 1/31/19 — SHEET 140 OF 811 — F600

CONSULTANT DESIGN

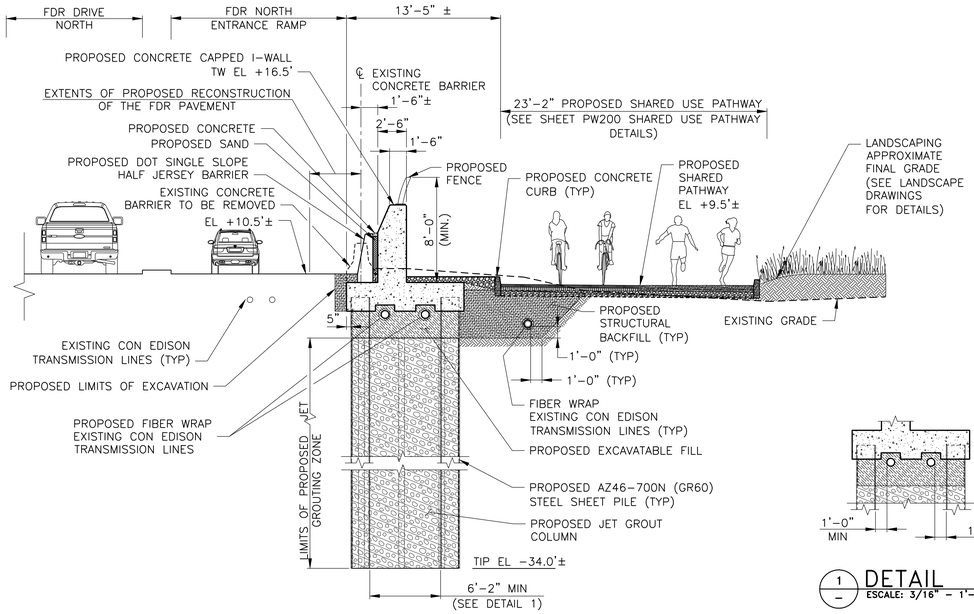

B1 F301 SECTION AT STA. 17+21
SCALE: 3/16" = 1'-0"

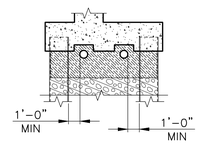

1 DETAIL
ESCALE: 3/16" = 1'-0"

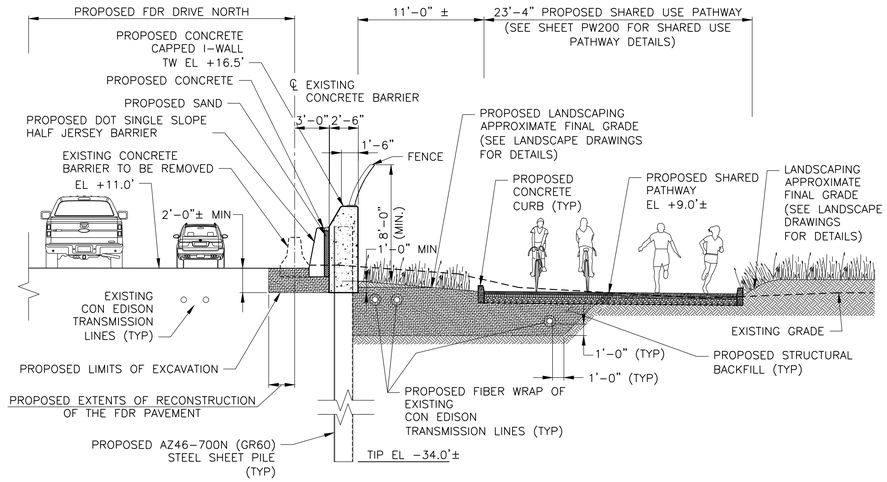

B2 F301 SECTION AT STA. 18+43
SCALE: 3/16" = 1'-0"

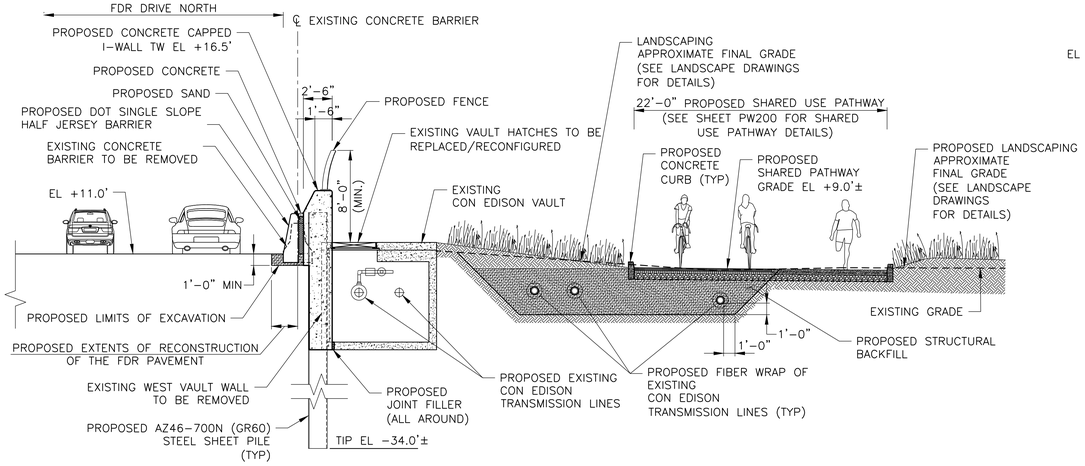

B3 F301 SECTION AT STA. 21+55
SCALE: 3/16" = 1'-0"

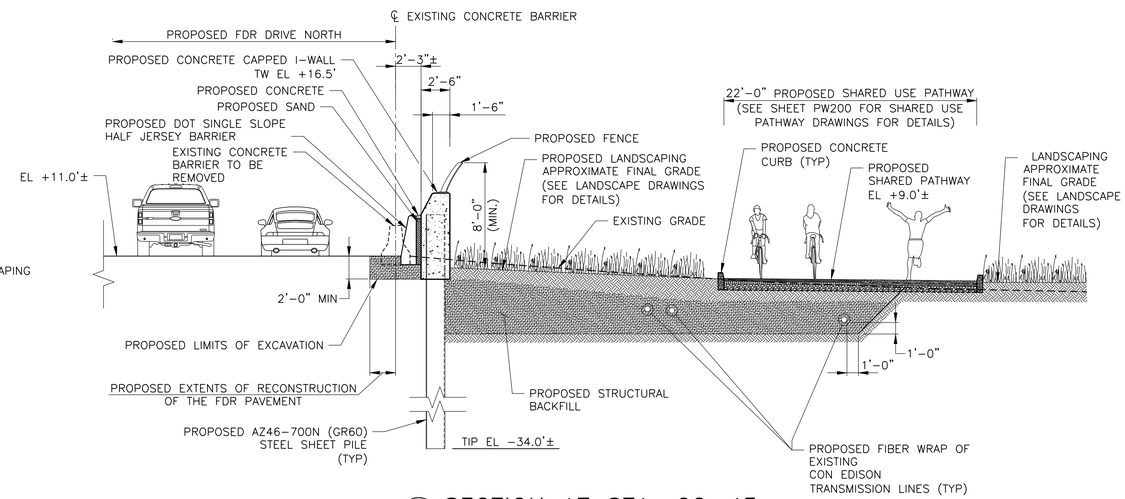

B4 F301 SECTION AT STA. 22+43
SCALE: 3/16" = 1'-0"

NOTES:

1. ALL ITEMS CALLED OUT AS EXISTING ARE TO REMAIN UNLESS NOTED OTHERWISE.
2. LOCATION OF ELECTRICAL LINES IS APPROXIMATE. IT IS BASED ON CON EDISON'S TRANSMISSION LINE X-REF DRAWING.
3. ONLY APPROXIMATE CON EDISON TRANSMISSION LINES ARE SHOWN. FOR OTHER UTILITIES IN THE PARK REFER TO THE ELECTRICAL AND PLUMBING PLANS.

CONCEPTUAL

SUBMITTED DATE: 1/31/2019

NO.	DATE	DESCRIPTIONS	BY	APPR'D

REVISIONS

TOPOGRAPHIC SURVEY PREPARED BY: FOR SURVEYOR INFORMATION SEE SURVEY SET SU100 DRAWINGS SERIES

FINAL DESIGN SUBMITTED BY: AKRF KSE — The AKRF-KSE JV

FINAL DESIGN PREPARED BY: ch2m — CH2M HILL NEW YORK, INC. NAME OF CONSULTANT

SIGNATURE

DATE

CITY OF NEW YORK
DEPARTMENT OF DESIGN + CONSTRUCTION
DIVISION OF INFRASTRUCTURE
BUREAU OF DESIGN

FLOOD PROTECTION
CROSS SECTIONS
REACH B

CH2M — DRAWN BY

SANDRESM1-F601-00.DWG — CADD FILE

INSTALLATION OF
EAST SIDE COASTAL RESILIENCY
BOROUGH OF MANHATTAN

CAPITAL PROJECT NO. SANDRESM1 1/31/19

SHEET 141 OF 811

F601

CONSULTANT DESIGN

CONCEPTUAL REDESIGN SUBMISSION 1/31/2019

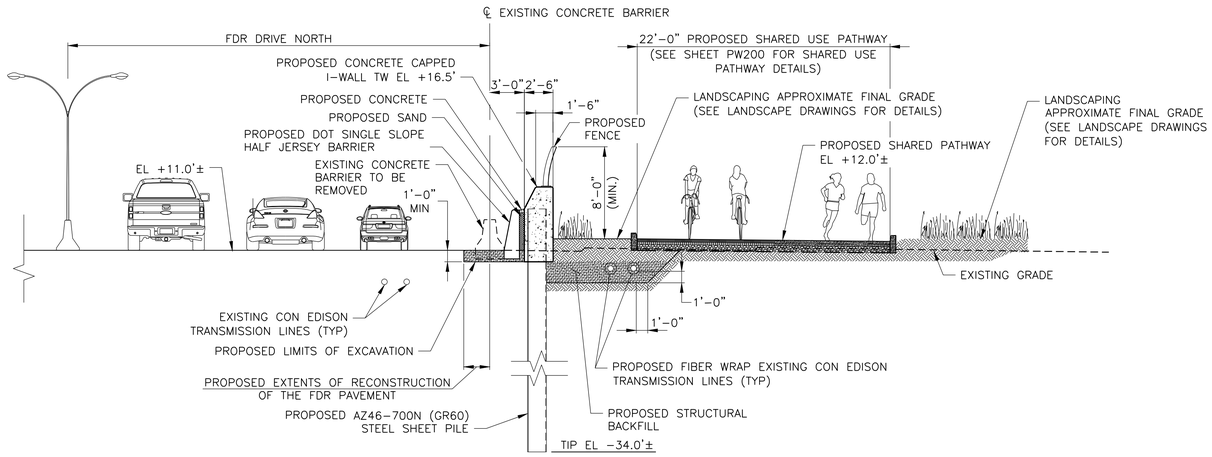

C1 F302 SECTION AT STA. 25+09
SCALE: 3/16" = 1'-0"

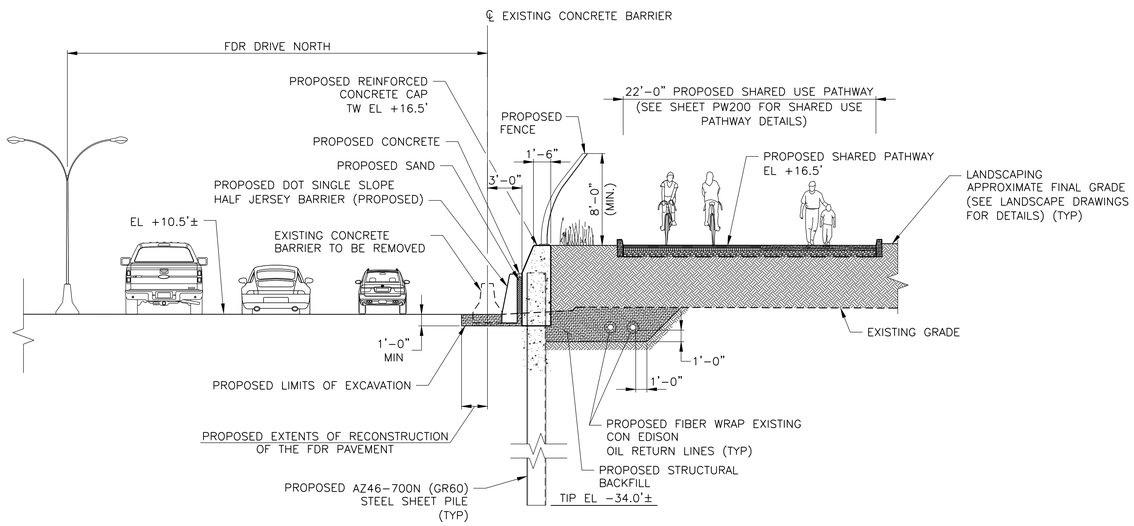

C2 F302 SECTION AT STA. 26+71
SCALE: 3/16" = 1'-0"

NOTES:

1. ALL ITEMS CALLED OUT AS EXISTING ARE TO REMAIN UNLESS NOTED OTHERWISE.
2. LOCATION OF ELECTRICAL LINES IS APPROXIMATE. IT IS BASED ON CON EDISON'S TRANSMISSION LINE X-REF DRAWING AND TEST PIT DATA NEAR THE AMPHITHEATER.
3. ONLY APPROXIMATE CON EDISON TRANSMISSION LINES ARE SHOWN. FOR OTHER UTILITIES IN THE PARK REFER TO THE ELECTRICAL AND PLUMBING PLANS.

CONCEPTUAL

SUBMITTED DATE: 1/31/2019

CONCEPTUAL REDESIGN SUBMISSION 1/31/2019

TOPOGRAPHIC SURVEY PREPARED BY: FOR SURVEYOR INFORMATION SEE SURVEY SET SU100 DRAWINGS SERIES

NO.	DATE	DESCRIPTIONS	BY	APPR'D

REVISIONS

FINAL DESIGN SUBMITTED BY: AKRF KSE — The AKRF-KSE JV

FINAL DESIGN PREPARED BY: ch2m — CH2M HILL NEW YORK, INC. NAME OF CONSULTANT

SIGNATURE

DATE

CITY OF NEW YORK
DEPARTMENT OF DESIGN + CONSTRUCTION
DIVISION OF INFRASTRUCTURE
BUREAU OF DESIGN

FLOOD PROTECTION
CROSS SECTIONS
REACH C

CH2M DRAWN BY

SANDRESM1-F602-00.DWG CADD FILE

INSTALLATION OF
EAST SIDE COASTAL RESILIENCY
BOROUGH OF MANHATTAN

CAPITAL PROJECT NO. SANDRESM1 1/31/19

SHEET 142 OF 811

F602

CONSULTANT DESIGN

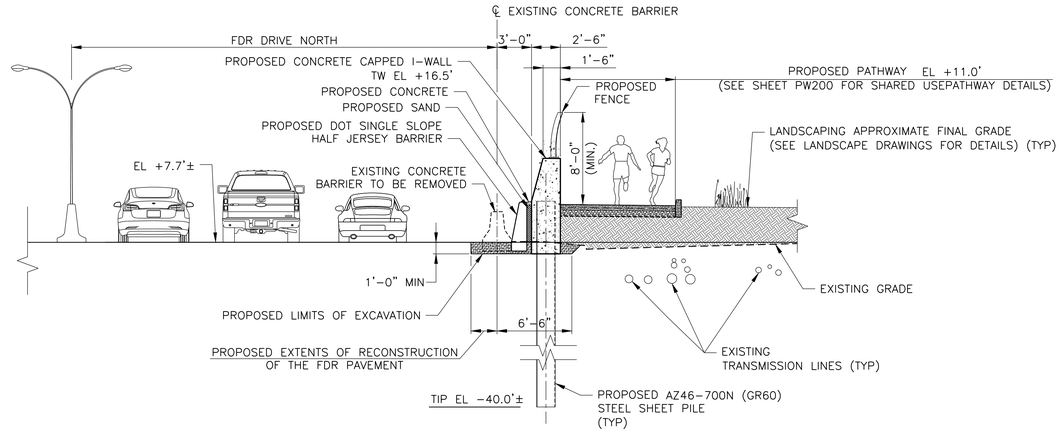

J1 F309 SECTION AT STA. 89+63
SCALE 3/16"=1'-0"

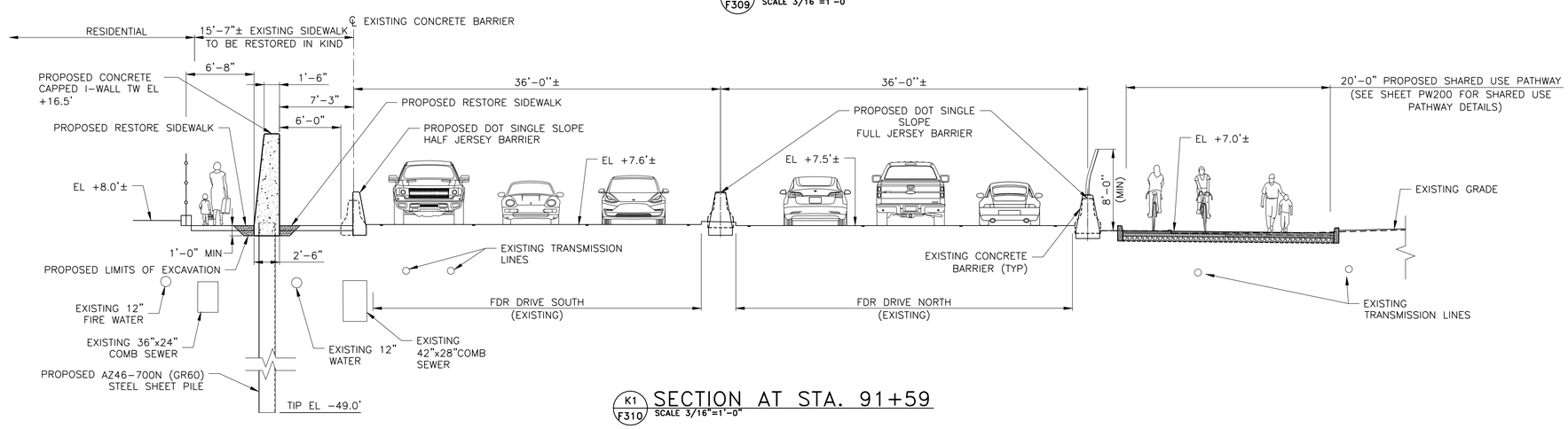

K1 F310 SECTION AT STA. 91+59
SCALE 3/16"=1'-0"

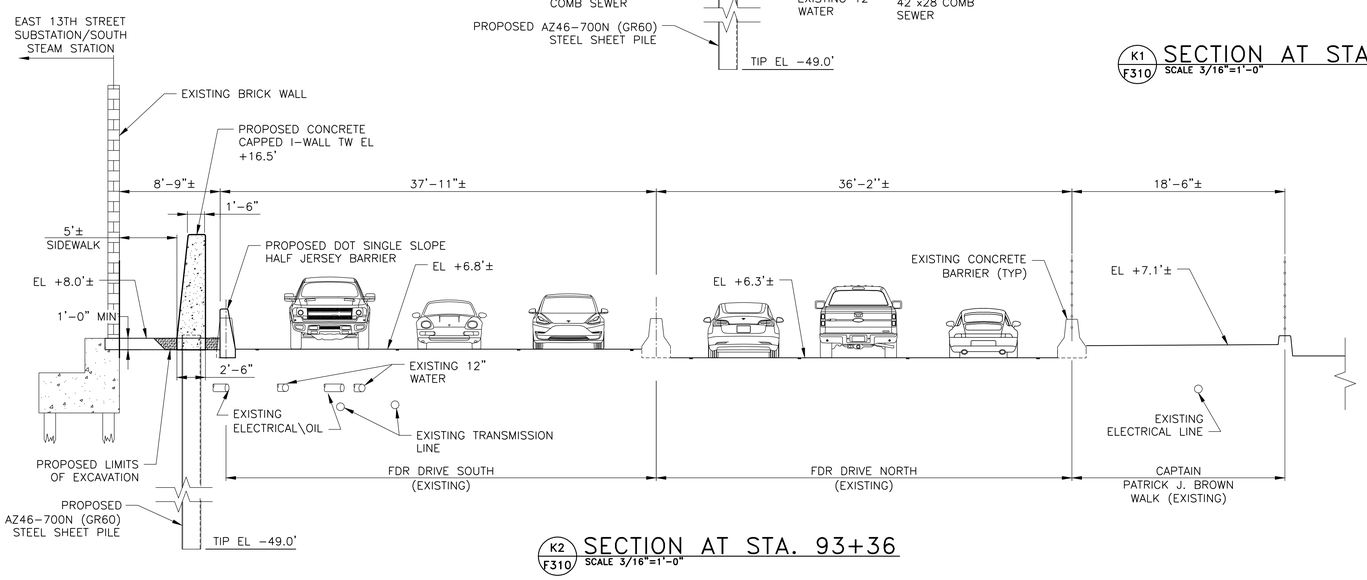

K2 F310 SECTION AT STA. 93+36
SCALE 3/16"=1'-0"

NOTE:

1. ALL ITEMS CALLED OUT AS EXISTING ARE TO REMAIN UNLESS NOTED OTHERWISE.

CONCEPTUAL

SUBMITTED DATE: 1/31/2019

TOPOGRAPHIC SURVEY PREPARED BY: FOR SURVEYOR INFORMATION SEE SURVEY SET SU100 DRAWINGS SERIES

NO.	DATE	DESCRIPTIONS	BY	APPR'D

REVISIONS

FINAL DESIGN SUBMITTED BY: AKRF KSE — The AKRF-KSE JV

FINAL DESIGN PREPARED BY: ch2m — CH2M HILL NEW YORK, INC. NAME OF CONSULTANT

SIGNATURE

DATE

CITY OF NEW YORK
DEPARTMENT OF DESIGN + CONSTRUCTION
DIVISION OF INFRASTRUCTURE
BUREAU OF DESIGN

FLOOD PROTECTION
CROSS SECTIONS
REACHES J-K

CH2M — DRAWN BY

SANDRESM1-F612-00.DWG — CADD FILE

INSTALLATION OF
EAST SIDE COASTAL RESILIENCY
BOROUGH OF MANHATTAN

CAPITAL PROJECT NO. SANDRESM1 1/31/19

SHEET 143 OF 811

F610

CONSULTANT DESIGN

CONCEPTUAL REDESIGN SUBMISSION 1/31/2019

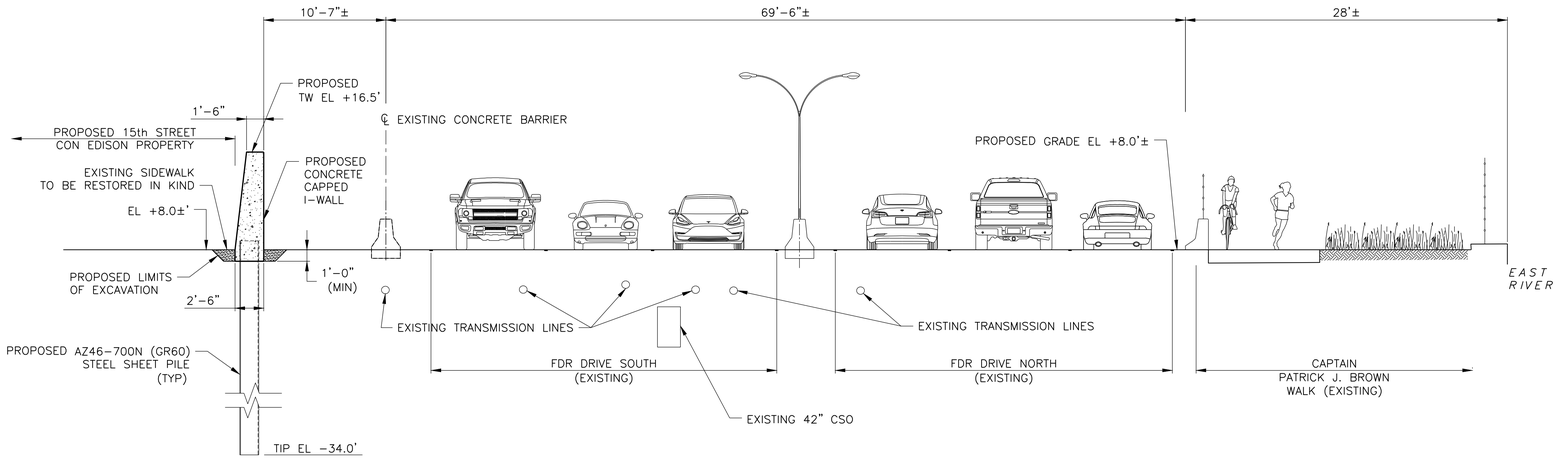

L1 F311 SECTION AT STA. 98+69
SCALE 3/16"=1'-0"

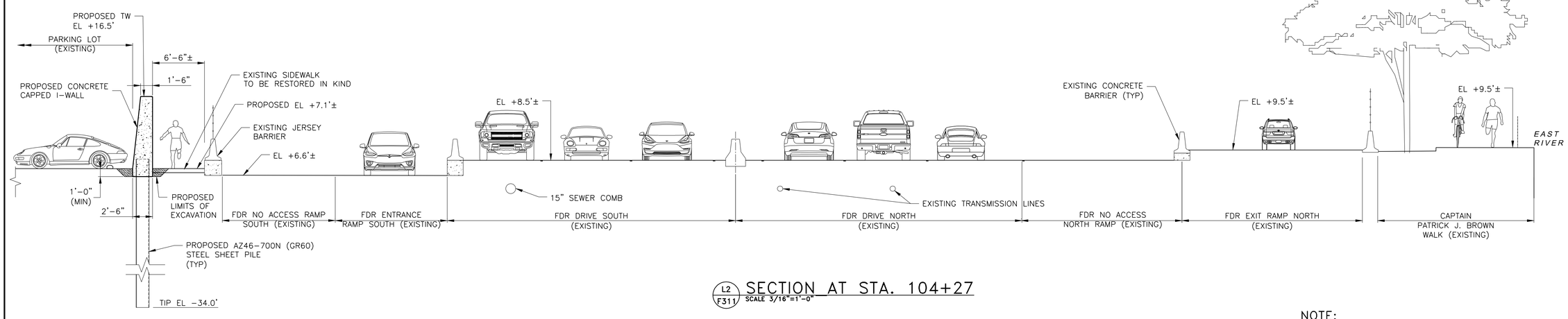

L2 F311 SECTION AT STA. 104+27
SCALE 3/16"=1'-0"

NOTE:

1. ALL ITEMS CALLED OUT AS EXISTING ARE TO REMAIN UNLESS NOTED OTHERWISE.

CONCEPTUAL

SUBMITTED DATE: 1/31/2019

CONCEPTUAL REDESIGN SUBMISSION 1/31/2019

TOPOGRAPHIC SURVEY PREPARED BY: FOR SURVEYOR INFORMATION SEE SURVEY SET SU100 DRAWINGS SERIES

NO.	DATE	DESCRIPTIONS	BY	APPR'D

REVISIONS

FINAL DESIGN SUBMITTED BY: AKRF KSE — The AKRF-KSE JV

FINAL DESIGN PREPARED BY: ch2m — CH2M HILL NEW YORK, INC. NAME OF CONSULTANT

SIGNATURE

DATE

CITY OF NEW YORK
DEPARTMENT OF DESIGN + CONSTRUCTION
DIVISION OF INFRASTRUCTURE
BUREAU OF DESIGN

FLOOD PROTECTION
CROSS SECTIONS
REACH L

CH2M DRAWN BY

SANDRESM1-F613-00.DWG CADD FILE

INSTALLATION OF
EAST SIDE COASTAL RESILIENCY
BOROUGH OF MANHATTAN

CAPITAL PROJECT NO. SANDRESM1 1/31/19

SHEET 144 OF 811

F611

CONSULTANT DESIGN

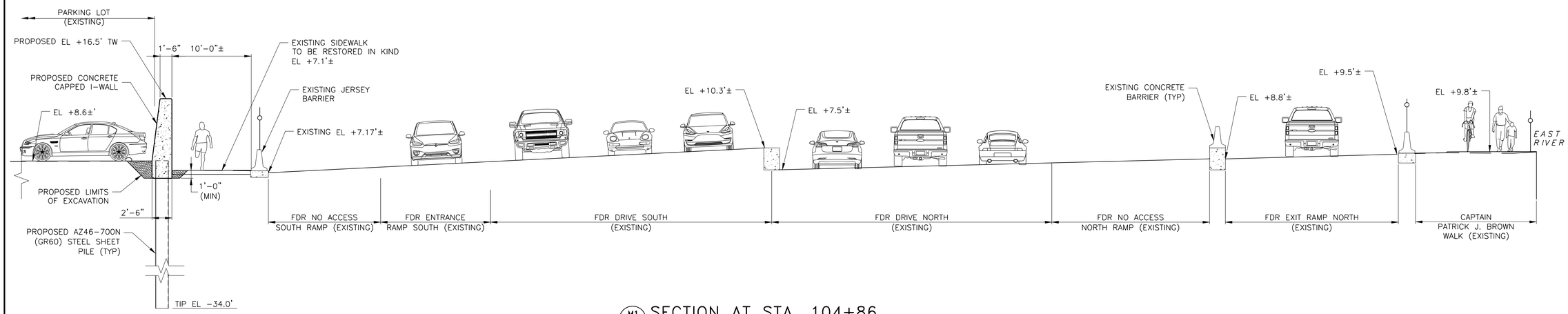

M1 F312 SECTION AT STA. 104+86
SCALE 3/16"=1'-0"

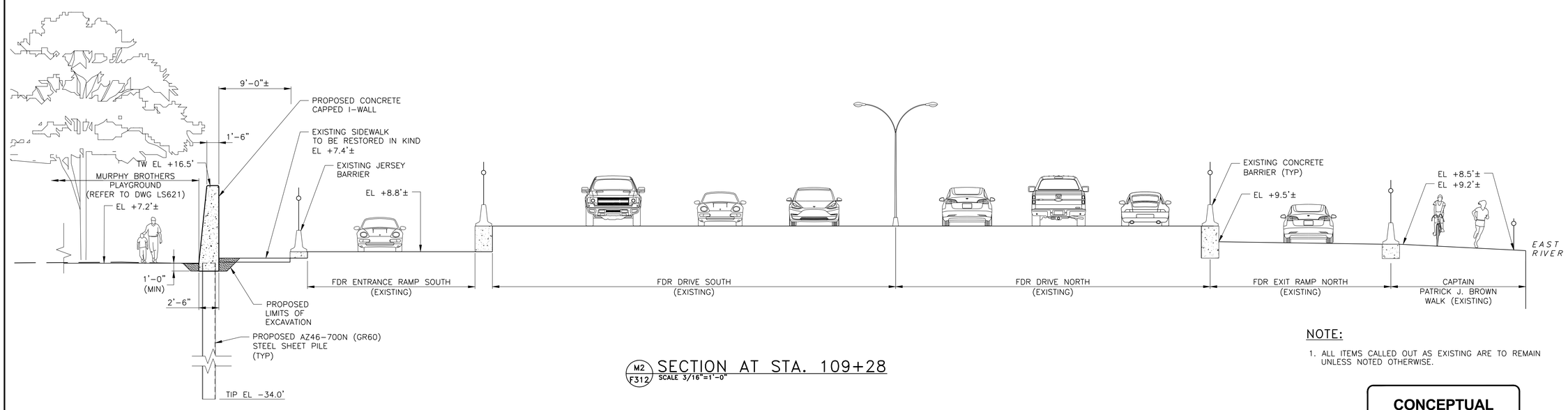

M2 F312 SECTION AT STA. 109+28
SCALE 3/16"=1'-0"

NOTE:

1. ALL ITEMS CALLED OUT AS EXISTING ARE TO REMAIN UNLESS NOTED OTHERWISE.

CONCEPTUAL

SUBMITTED DATE: 1/31/2019

NOTE:

1. ALL ITEMS CALLED OUT AS EXISTING ARE TO REMAIN UNLESS NOTED OTHERWISE.

TOPOGRAPHIC SURVEY PREPARED BY: FOR SURVEYOR INFORMATION SEE SURVEY SET SU100 DRAWINGS SERIES

NO.	DATE	DESCRIPTIONS	BY	APPR'D

REVISIONS

FINAL DESIGN SUBMITTED BY: AKRF KSE — The AKRF-KSE JV

FINAL DESIGN PREPARED BY: ch2m — CH2M HILL NEW YORK, INC. NAME OF CONSULTANT

SIGNATURE

DATE

CITY OF NEW YORK
DEPARTMENT OF DESIGN + CONSTRUCTION
DIVISION OF INFRASTRUCTURE
BUREAU OF DESIGN

FLOOD PROTECTION
CROSS SECTIONS
REACH M

CH2M DRAWN BY

SANDRESM1-F614-00.DWG CADD FILE

INSTALLATION OF
EAST SIDE COASTAL RESILIENCY
BOROUGH OF MANHATTAN

CAPITAL PROJECT NO. SANDRESM1 1/31/19

SHEET 145 OF 811

F612

CONSULTANT DESIGN

CONCEPTUAL REDESIGN SUBMISSION 1/31/2019

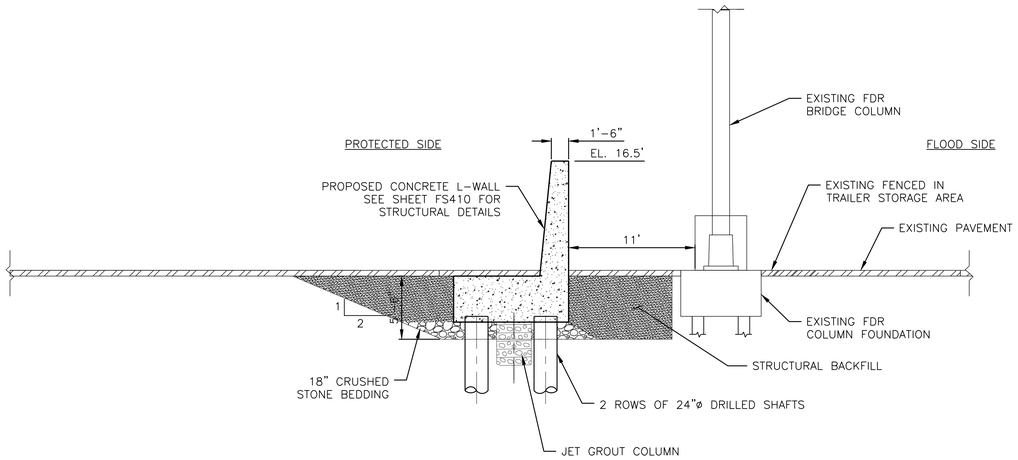

N1 F313 SECTION AT STA. 108+77

SCALE: 3/16" = 1'-0"

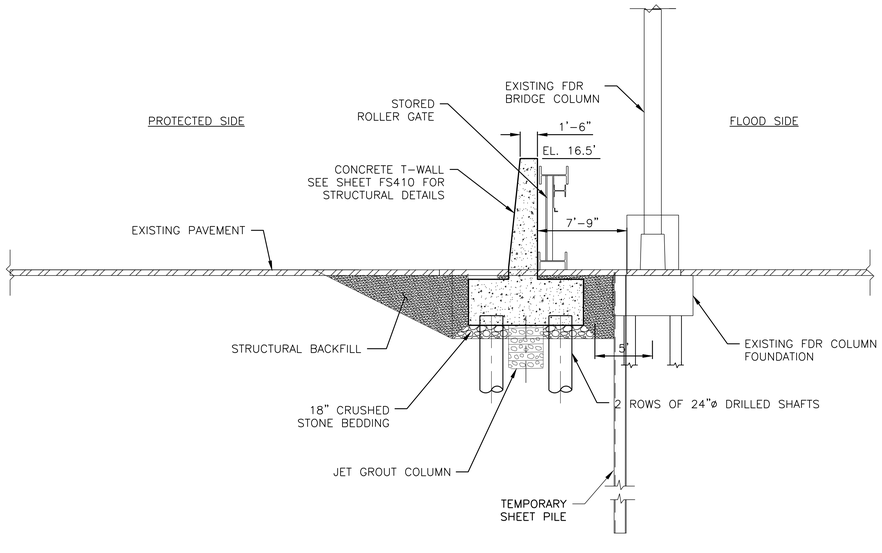

N2 F313 SECTION AT STA. 109+03

SCALE: 3/16" = 1'-0"

CONCEPTUAL

SUBMITTED DATE: 1/31/2019

NO.	DATE	DESCRIPTIONS	BY	APPR'D

REVISIONS

TOPOGRAPHIC SURVEY PREPARED BY: FOR SURVEYOR
INFORMATION SEE SURVEY SET SU100 DRAWINGS SERIES

FINAL DESIGN SUBMITTED BY: AKRF KSE — The AKRF-KSE JV

FINAL DESIGN PREPARED BY: ARCADIS
ARCADIS OF NEW YORK, INC.
NAME OF CONSULTANT

SIGNATURE
DATE

CITY OF NEW YORK
DEPARTMENT OF DESIGN + CONSTRUCTION
DIVISION OF INFRASTRUCTURE
BUREAU OF DESIGN

FLOOD PROTECTION
CROSS SECTIONS
REACH N SHEET 1 OF 2

ARCADIS
DRAWN BY

SANDRESM1-F613-00.DWG
CADD FILE

INSTALLATION OF
EAST SIDE COASTAL RESILIENCY
BOROUGH OF MANHATTAN

CAPITAL PROJECT NO. SANDRESM1 1/31/19

SHEET 146 OF 811

F613

CONSULTANT DESIGN

CONCEPTUAL REDESIGN SUBMISSION 1/31/2019

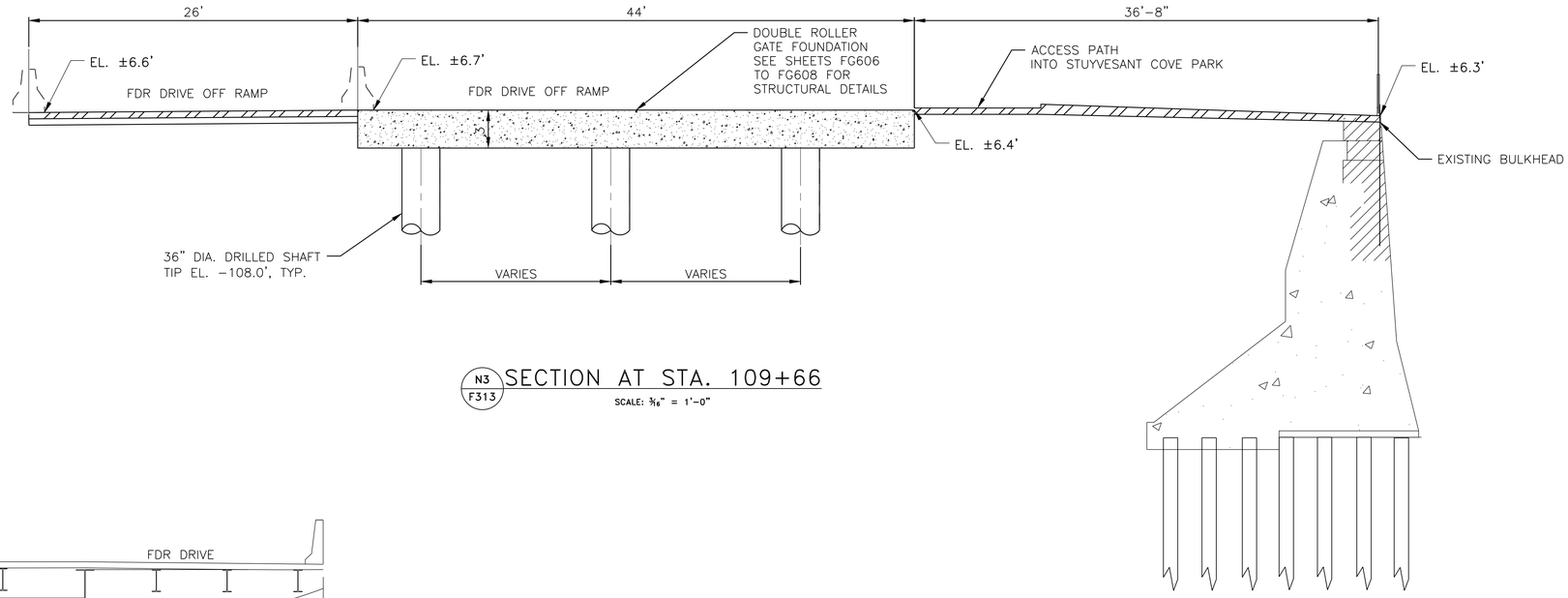

N3 / F313 SECTION AT STA. 109+66

SCALE: 3/16" = 1'-0"

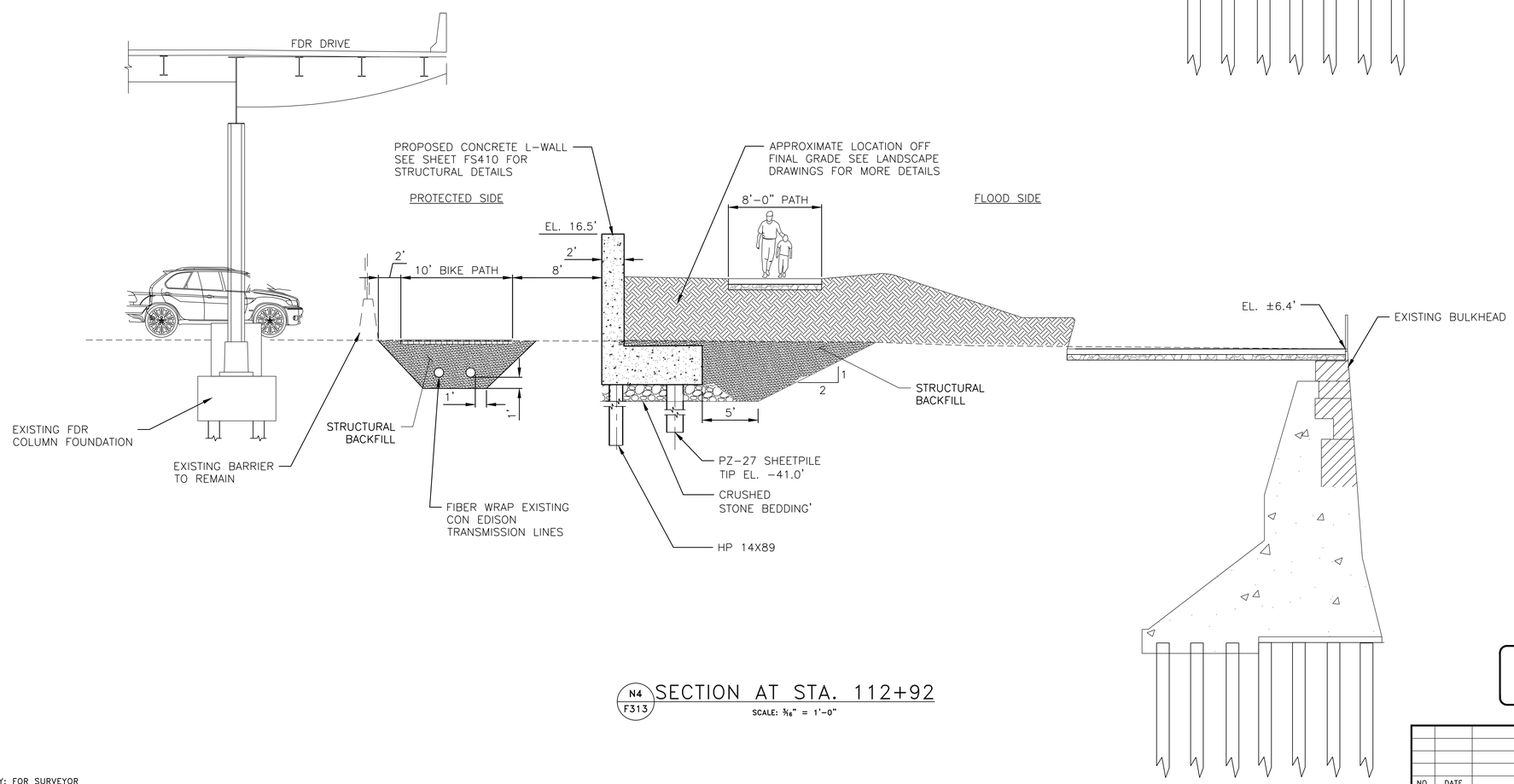

N4 / F313 SECTION AT STA. 112+92

SCALE: 3/16" = 1'-0"

CONCEPTUAL REDESIGN SUBMISSION 1/31/2019

CONCEPTUAL

SUBMITTED DATE: 1/31/2019

NO.	DATE	DESCRIPTIONS	BY	APPR'D

REVISIONS

TOPOGRAPHIC SURVEY PREPARED BY: FOR SURVEYOR INFORMATION SEE SURVEY SET SU100 DRAWINGS SERIES

FINAL DESIGN SUBMITTED BY: AKRF KSE — The AKRF-KSE JV

FINAL DESIGN PREPARED BY: ARCADIS — ARCADIS OF NEW YORK, INC. NAME OF CONSULTANT

SIGNATURE

DATE

CITY OF NEW YORK
DEPARTMENT OF DESIGN + CONSTRUCTION
DIVISION OF INFRASTRUCTURE
BUREAU OF DESIGN

FLOOD PROTECTION
CROSS SECTIONS
REACH N SHEET 2 OF 2

ARCADIS DRAWN BY

SANDRESM1-F614-00.DWG CADD FILE

INSTALLATION OF
EAST SIDE COASTAL RESILIENCY
BOROUGH OF MANHATTAN

CAPITAL PROJECT NO. SANDRESM1 1/31/19

SHEET 147 OF 811

F614

CONSULTANT DESIGN

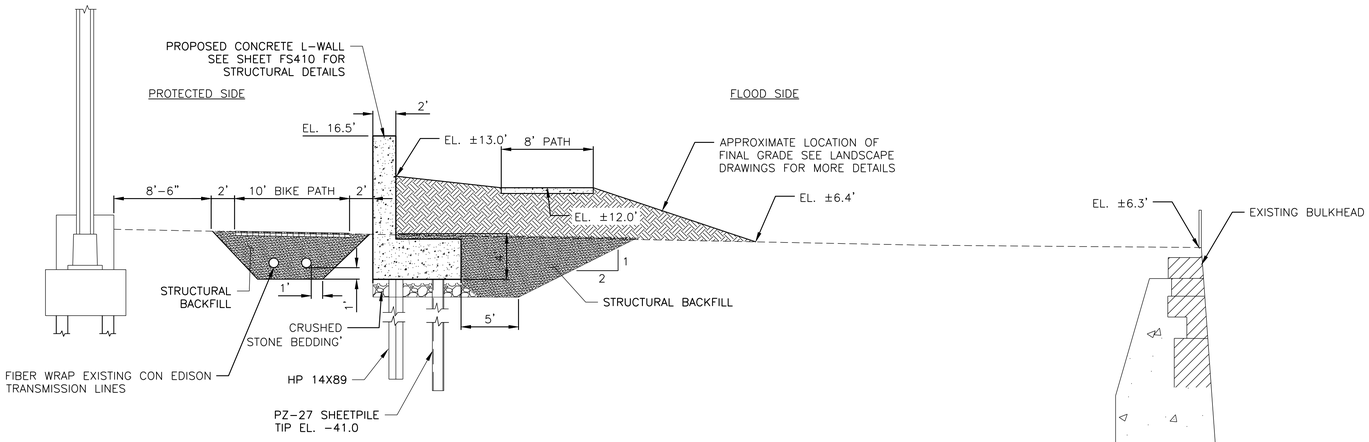

01 F314 SECTION AT STA. 117+63

SCALE: 3/16" = 1'-0"

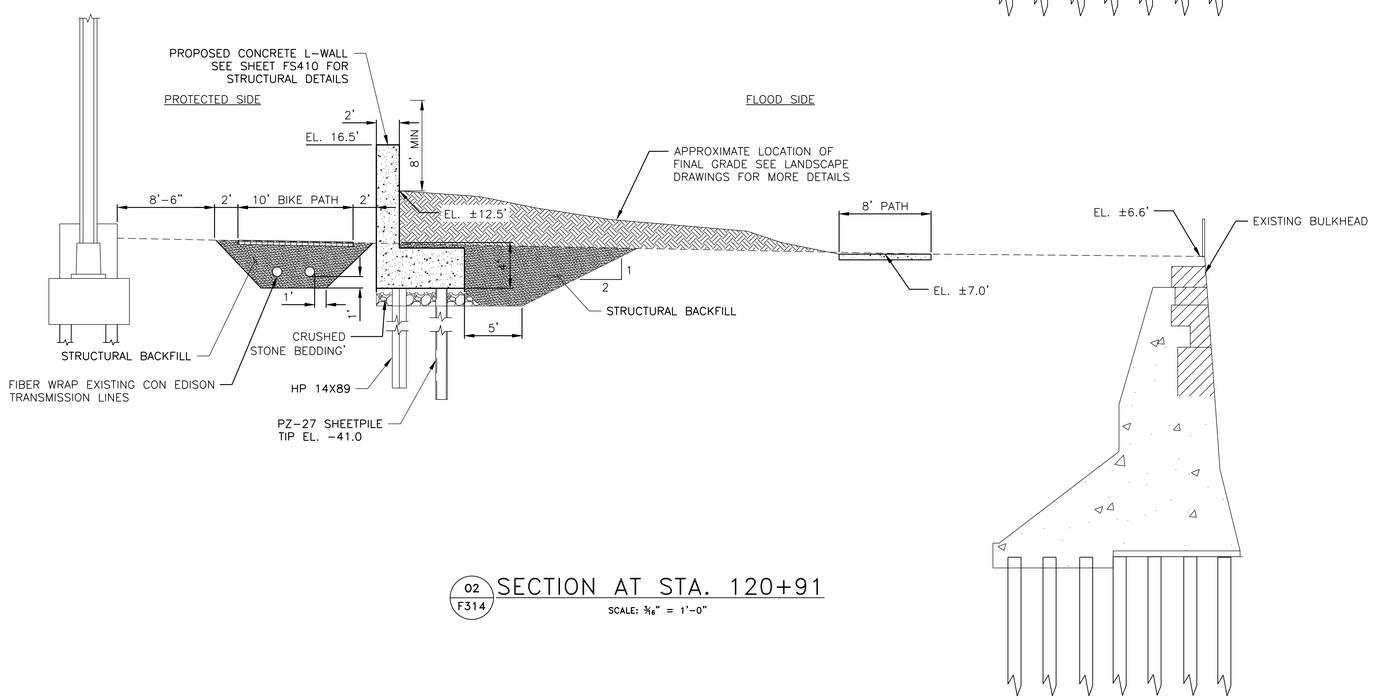

02 F314 SECTION AT STA. 120+91

SCALE: 3/16" = 1'-0"

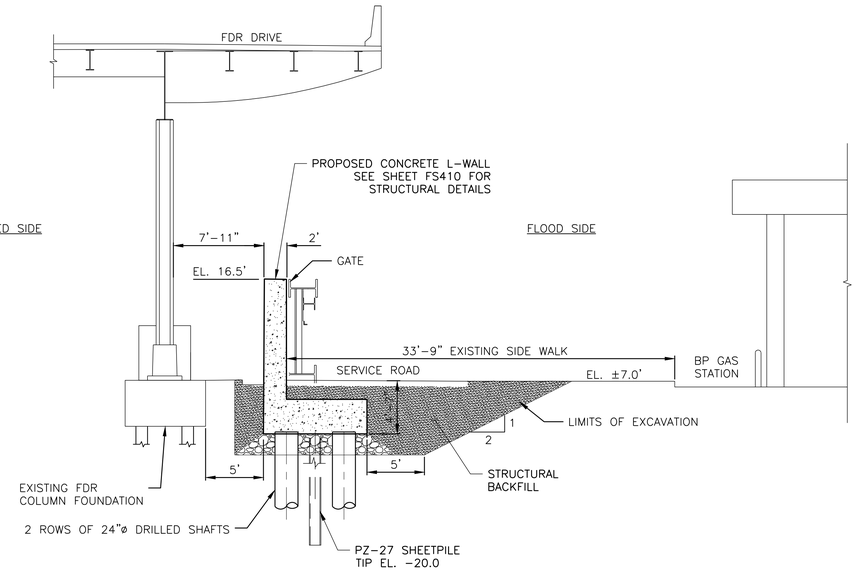

03 F314 SECTION AT STA. 124+38

SCALE: 3/16" = 1'-0"

CONCEPTUAL REDESIGN SUBMISSION 1/31/2019

CONCEPTUAL

SUBMITTED DATE: 1/31/2019

TOPOGRAPHIC SURVEY PREPARED BY: FOR SURVEYOR INFORMATION SEE SURVEY SET SU100 DRAWINGS SERIES

NO.	DATE	DESCRIPTIONS	BY	APPR'D

REVISIONS

FINAL DESIGN SUBMITTED BY: AKRF KSE — The AKRF-KSE JV

FINAL DESIGN PREPARED BY: ARCADIS — ARCADIS OF NEW YORK, INC. NAME OF CONSULTANT

SIGNATURE

DATE

CITY OF NEW YORK
DEPARTMENT OF DESIGN + CONSTRUCTION
DIVISION OF INFRASTRUCTURE
BUREAU OF DESIGN

FLOOD PROTECTION
CROSS SECTIONS
REACH O

ARCADIS DRAWN BY

SANDRESM1-F615-00.DWG CADD FILE

INSTALLATION OF
EAST SIDE COASTAL RESILIENCY
BOROUGH OF MANHATTAN

CAPITAL PROJECT NO. SANDRESM1 1/31/19

SHEET 148 OF 811

F615

CONSULTANT DESIGN

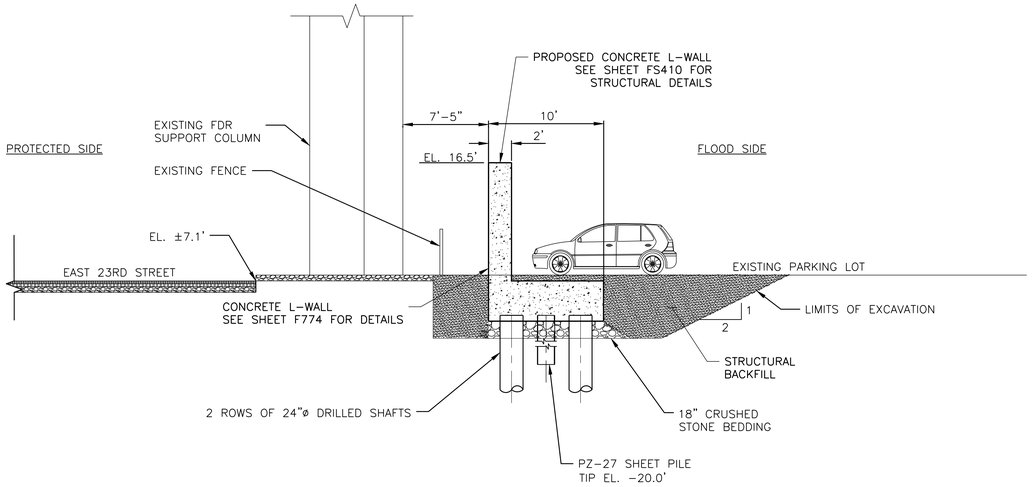

Q1 F315 SECTION AT STA. 126+33

SCALE: 3/16" = 1'-0"

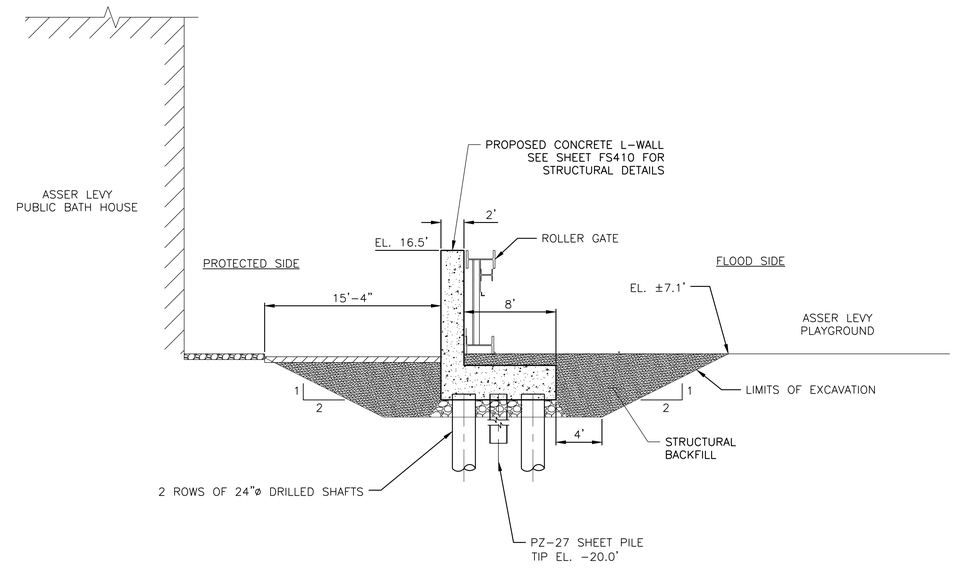

Q3 F315 SECTION AT STA. 130+42

SCALE: 3/16" = 1'-0"

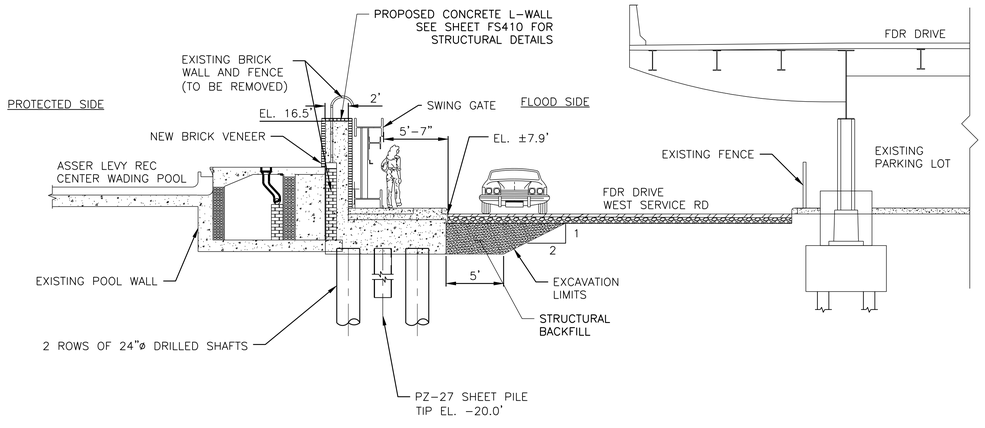

Q2 F315 SECTION AT STA. 128+53

SCALE: 3/16" = 1'-0"

CONCEPTUAL REDESIGN SUBMISSION 1/31/2019

CONCEPTUAL

SUBMITTED DATE: 1/31/2019

NO.	DATE	DESCRIPTIONS	BY	APPR'D

REVISIONS

TOPOGRAPHIC SURVEY PREPARED BY: FOR SURVEYOR
INFORMATION SEE SURVEY SET SU100 DRAWINGS SERIES

FINAL DESIGN SUBMITTED BY: AKRF KSE — The AKRF-KSE JV

FINAL DESIGN PREPARED BY: ARCADIS — ARCADIS OF NEW YORK, INC. NAME OF CONSULTANT

SIGNATURE

DATE

CITY OF NEW YORK
DEPARTMENT OF DESIGN + CONSTRUCTION
DIVISION OF INFRASTRUCTURE
BUREAU OF DESIGN

FLOOD PROTECTION
CROSS SECTIONS
REACH Q

ARCADIS DRAWN BY

SANDRESM1-F616-00.DWG CADD FILE

INSTALLATION OF
EAST SIDE COASTAL RESILIENCY
BOROUGH OF MANHATTAN

CAPITAL PROJECT NO. SANDRESM1 1/31/19

SHEET 149 OF 811

F616

CONSULTANT DESIGN