# Appendix C1b
# Preferred Alternative - Bridge Plans, Elevations, and Sections

TABLE OF CONTENTS


| SHEET NO. | DRAWING NO. | SHEET TITLE |
|---|---|---|
| BC101 | SANDRESM1-BC101-00.DWG | CORLEARS HOOK PEDESTRIAN BRIDGE EXISTING PLAN AND ELEVATION |
| BC103 | SANDRESM1-BC103-00.DWG | CORLEARS HOOK PEDESTRIAN NEW BRIDGE PLAN & ELEVATION |
| BC105 | SANDRESM1-BC105-00.DWG | CORLEARS HOOK PEDESTRIAN NEW BRIDGE SECTIONS & DETAILS |
| BD100 | SANDRESM1-BD100-00.DWG | DELANCEY STREET BRIDGE EXISTING GENERAL PLAN AND ELEVATION |
| BD102 | SANDRESM1-BD102-00.DWG | DELANCEY STREET BRIDGE GENERAL PLAN AND ELEVATION |
| BD103 | SANDRESM1-BD103-00.DWG | DELANCEY STREET BRIDGE TYPICAL SECTIONS |
| BT100 | SANDRESM1-BT100-00.DWG | EAST 10TH STREET BRIDGE EXISTING GENERAL PLAN AND ELEVATION |
| BT102 | SANDRESM1-BT102-00.DWG | EAST 10TH STREET BRIDGE GENERAL PLAN AND ELEVATION |
| BT103 | SANDRESM1-BT103-00.DWG | EAST 10TH STREET BRIDGE TYPICAL SECTIONS |
| BH100 | SANDRESM1-BH100-00.DWG | HOUSTON STREET BRIDGE EXISTING GENERAL PLAN AND ELEVATION |
| BH101 | SANDRESM1-BH101-00.DWG | HOUSTON STREET BRIDGE EXISTING TYPICAL SECTIONS |
| BH102 | SANDRESM1-BH102-00.DWG | HOUSTON STREET BRIDGE GENERAL PLAN AND ELEVATION |
| BH103 | SANDRESM1-BH103-00.DWG | HOUSTON STREET BRIDGE TYPICAL SECTIONS |

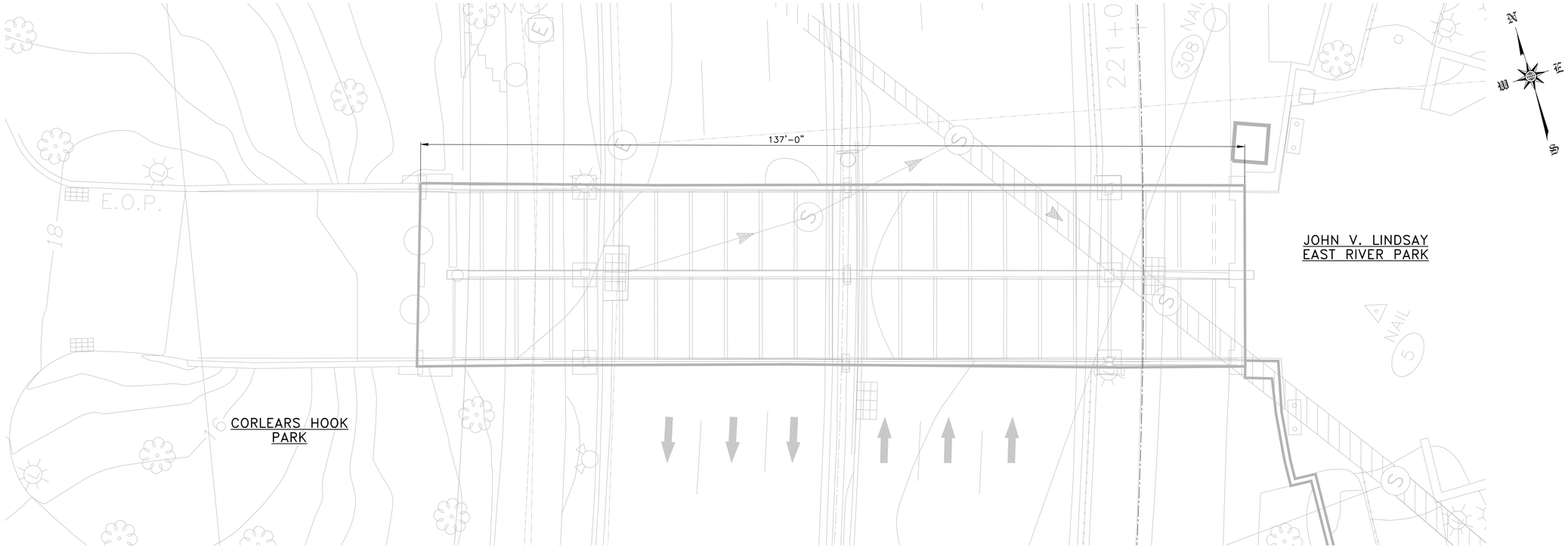


## CORLEARS HOOK PEDESTRIAN BRIDGE – EXISTING PLAN

SCALE: ⅛" = 1'-0"

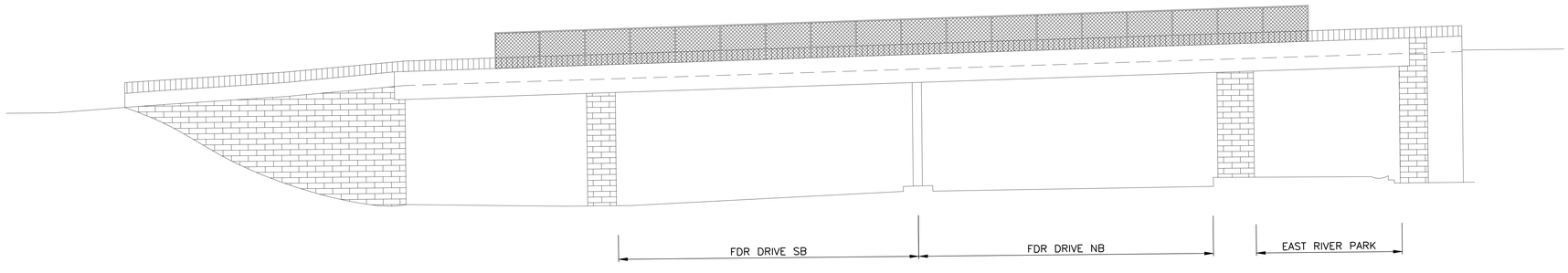


## CORLEARS HOOK PEDESTRIAN BRIDGE – EXISTING ELEVATION

SCALE: ⅛" = 1'-0"

**CONCEPTUAL**

SUBMITTED DATE: 1/31/2019

TOPOGRAPHIC SURVEY PREPARED BY: FOR SURVEYOR INFORMATION SEE SURVEY SET SU100 DRAWINGS SERIES

| NO. | DATE | DESCRIPTIONS | BY | APPR'D |
|---|---|---|---|---|
| | | | | |

REVISIONS

FINAL DESIGN SUBMITTED BY: AKRF KSE — The AKRF-KSE JV

FINAL DESIGN PREPARED BY: KSE — KS ENGINEERS, P.C. NAME OF CONSULTANT

SIGNATURE

DATE

CITY OF NEW YORK
DEPARTMENT OF DESIGN + CONSTRUCTION
DIVISION OF INFRASTRUCTURE
BUREAU OF DESIGN

CORLEARS HOOK PEDESTRIAN BRIDGE
EXISTING GENERAL PLAN & ELEVATION

KSE — DRAWN BY

SANDRESM1-BC101-00.DWG — CADD FILE

INSTALLATION OF
EAST SIDE COASTAL RESILIENCY
BOROUGH OF MANHATTAN

CAPITAL PROJECT NO. SANDRESM1 01/31/19

SHEET 16 OF 811

BC101

CONSULTANT DESIGN

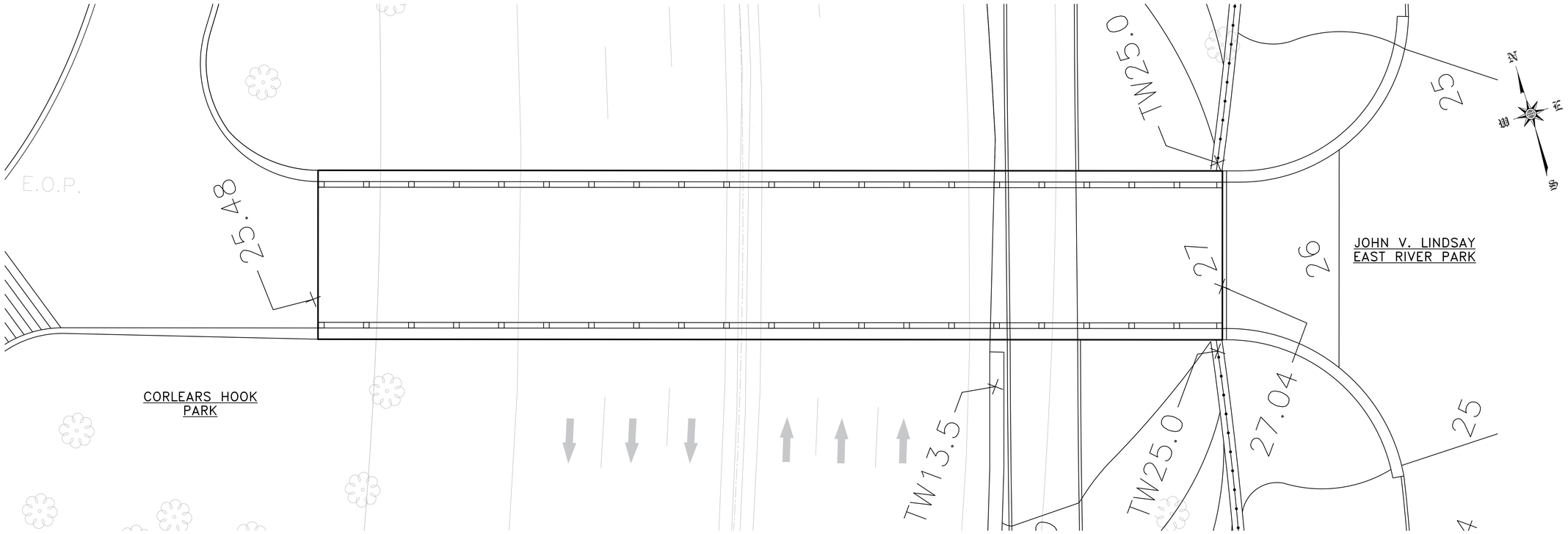


## CORLEARS HOOK PEDESTRIAN BRIDGE – PROPOSED PLAN

SCALE: ⅛" = 1'-0"

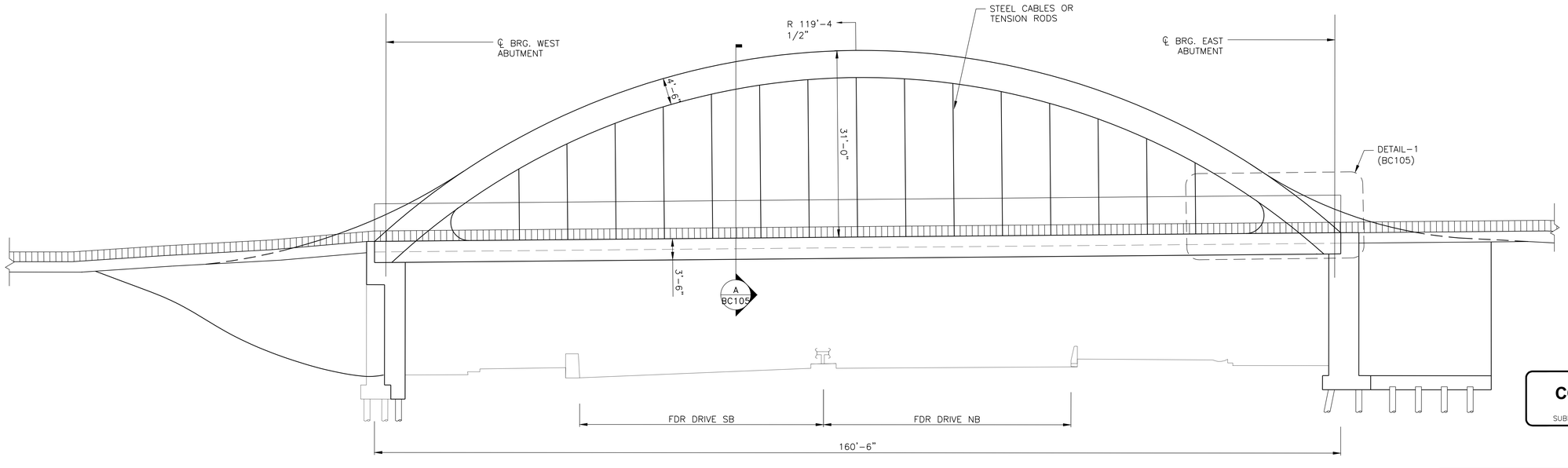


## CORLEARS HOOK PEDESTRIAN BRIDGE – PROPOSED ELEVATION

SCALE: ⅛" = 1'-0"

**CONCEPTUAL**

SUBMITTED DATE: 1/31/2019

TOPOGRAPHIC SURVEY PREPARED BY: FOR SURVEYOR INFORMATION SEE SURVEY SET SU100 DRAWINGS SERIES

| NO. | DATE | DESCRIPTIONS | BY | APPR'D |
|---|---|---|---|---|
| | | | | |

REVISIONS

FINAL DESIGN SUBMITTED BY: AKRF KSE — The AKRF-KSE JV

FINAL DESIGN PREPARED BY: KSE — KS ENGINEERS, P.C. NAME OF CONSULTANT — SIGNATURE — DATE

CITY OF NEW YORK
DEPARTMENT OF DESIGN + CONSTRUCTION
DIVISION OF INFRASTRUCTURE
BUREAU OF DESIGN

CORLEARS HOOK PEDESTRIAN NEW BRIDGE PLAN & ELEVATION

KSE — DRAWN BY
SANDRESM1-BC103-00.DWG — CADD FILE

INSTALLATION OF
EAST SIDE COASTAL RESILIENCY
BOROUGH OF MANHATTAN

CAPITAL PROJECT NO. SANDRESM1 01/31/19

SHEET 18 OF 811

BC103

CONSULTANT DESIGN

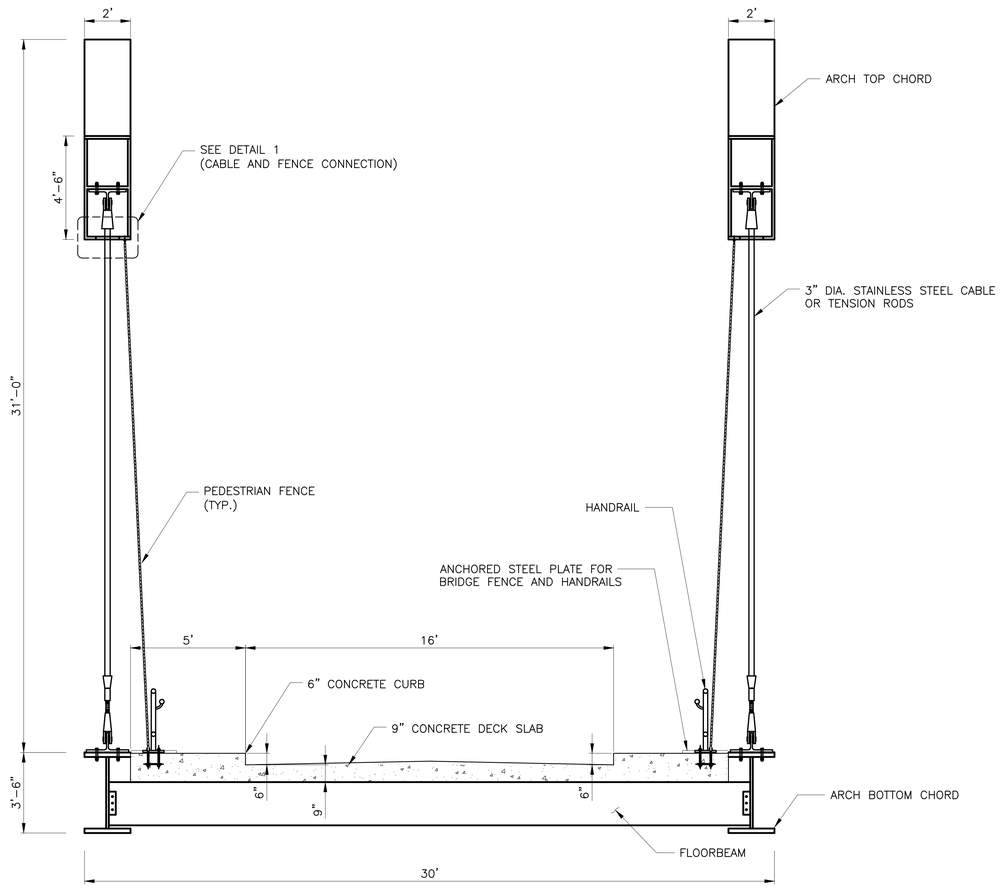


A BC103 SECTION
SCALE: 3/8" = 1'-0"




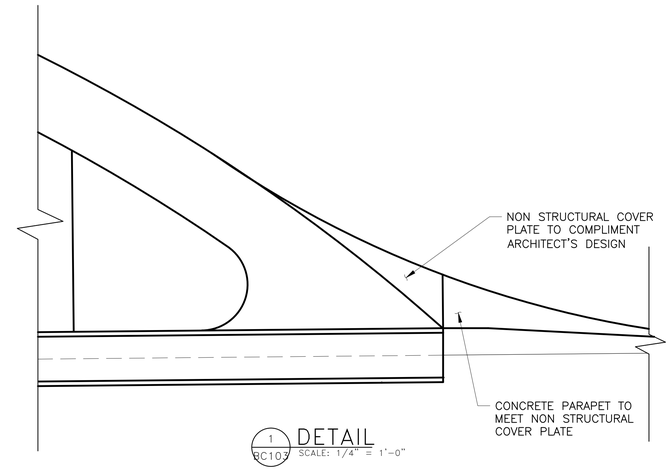


1 BC103 DETAIL
SCALE: 1/4" = 1'-0"

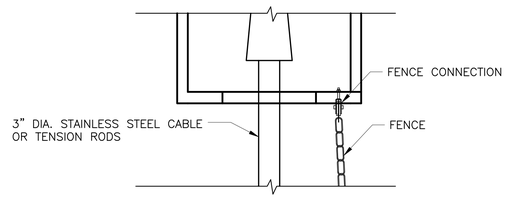


1 — DETAIL
SCALE: 3" = 1'-0"

NOTE:

1. LATERAL BRACING TO BE DETERMINED DURING DESIGN

**CONCEPTUAL**

SUBMITTED DATE: 1/31/2019

TOPOGRAPHIC SURVEY PREPARED BY: FOR SURVEYOR INFORMATION SEE SURVEY SET SU100 DRAWINGS SERIES

| NO. | DATE | DESCRIPTIONS | BY | APPR'D |
|---|---|---|---|---|
| | | | | |
| | | | | |
| | | | | |
| | | | | |

REVISIONS

FINAL DESIGN SUBMITTED BY: AKRF KSE — The AKRF-KSE JV

FINAL DESIGN PREPARED BY: KSE — KS ENGINEERS, P.C. NAME OF CONSULTANT

SIGNATURE

DATE

CITY OF NEW YORK
DEPARTMENT OF DESIGN + CONSTRUCTION
DIVISION OF INFRASTRUCTURE
BUREAU OF DESIGN

CORLEARS HOOK PEDESTRIAN NEW BRIDGE SECTIONS AND DETAILS

KSE — DRAWN BY

SANDRESM1-BC105-00.DWG — CADD FILE

INSTALLATION OF
EAST SIDE COASTAL RESILIENCY
BOROUGH OF MANHATTAN

CAPITAL PROJECT NO. SANDRESM1 01/31/19

SHEET 20 OF 811 BC105

CONSULTANT DESIGN

CONCEPTUAL REDESIGN SUBMISSION 1/31/2019

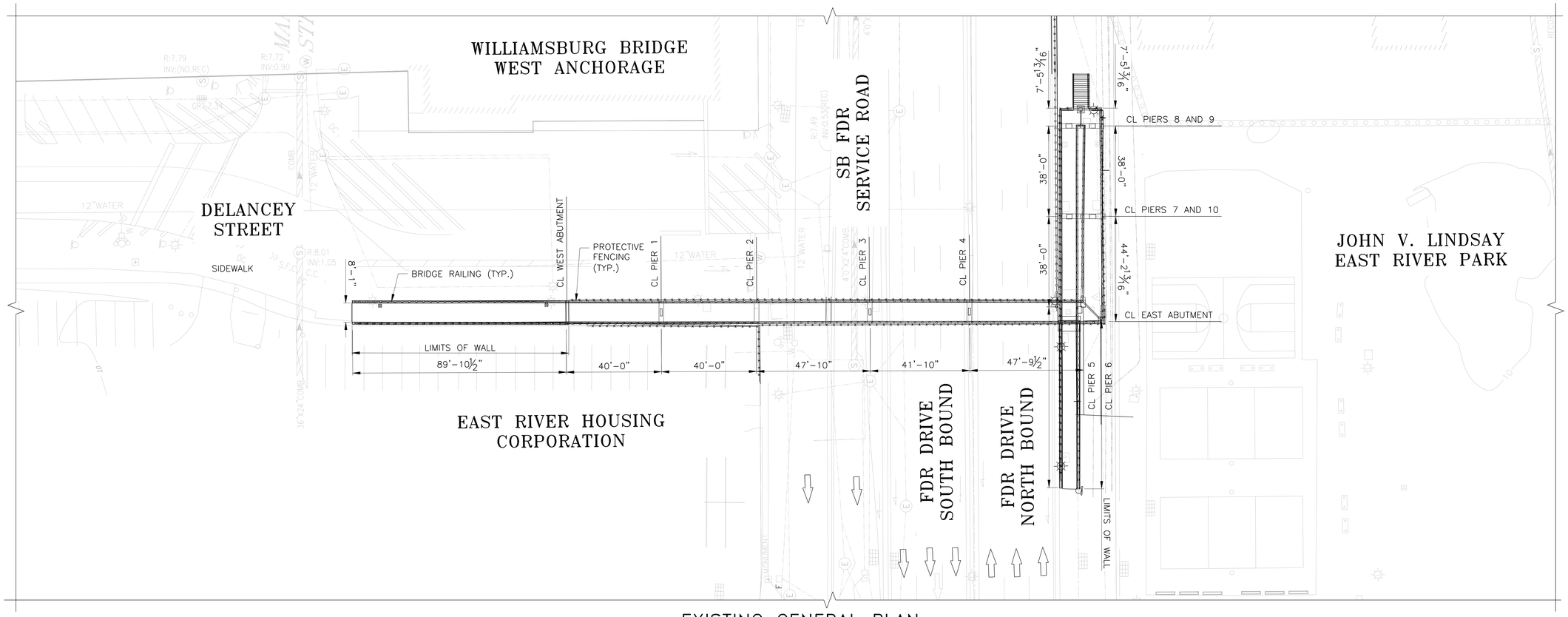


EXISTING GENERAL PLAN

SCALE: 1" = 20'

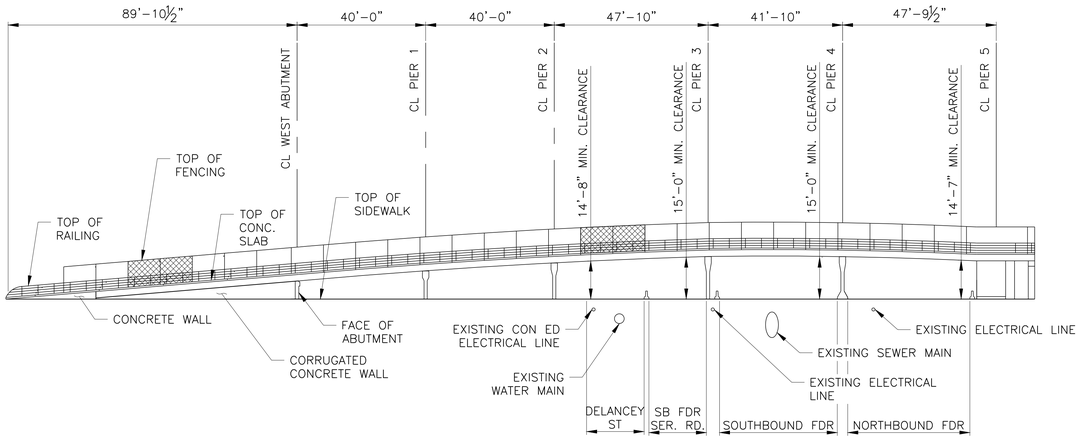


EXISTING GENERAL ELEVATION (LOOKING NORTH)

SCALE: 1" = 20'

**CONCEPTUAL**

SUBMITTED DATE: 1/31/19

TOPOGRAPHIC SURVEY PREPARED BY: FOR SURVEYOR
INFORMATION SEE SURVEY SET SU100 DRAWINGS SERIES

| NO. | DATE | DESCRIPTIONS | BY | APPR'D |
|---|---|---|---|---|
| | | | | |
| | | | | |
| | | | | |
| | | | | |

REVISIONS

FINAL DESIGN SUBMITTED BY:
AKRF KSE
The AKRF-KSE JV

FINAL DESIGN PREPARED BY:
Hardesty & Hanover
1501 BROADWAY
NEW YORK, NY 10036
(212) 944-1150
HARDESTY & HANOVER, LLC
NAME OF CONSULTANT

SIGNATURE

DATE

CITY OF NEW YORK
DEPARTMENT OF DESIGN + CONSTRUCTION
DIVISION OF INFRASTRUCTURE
BUREAU OF DESIGN

DELANCEY STREET BRIDGE
EXISTING GENERAL PLAN AND ELEVATION

HARDESTY & HANOVER, LLC
DRAWN BY

SANDRESM1-BD100-00.DWG
CADD FILE

INSTALLATION OF
EAST SIDE COASTAL RESILIENCY
BOROUGH OF MANHATTAN

CAPITAL PROJECT NO. SANDRESM1 1/31/19

SHEET 21 OF 811

BD100

CONSULTANT DESIGN

CONCEPTUAL REDESIGN SUBMISSION 1/31/2019

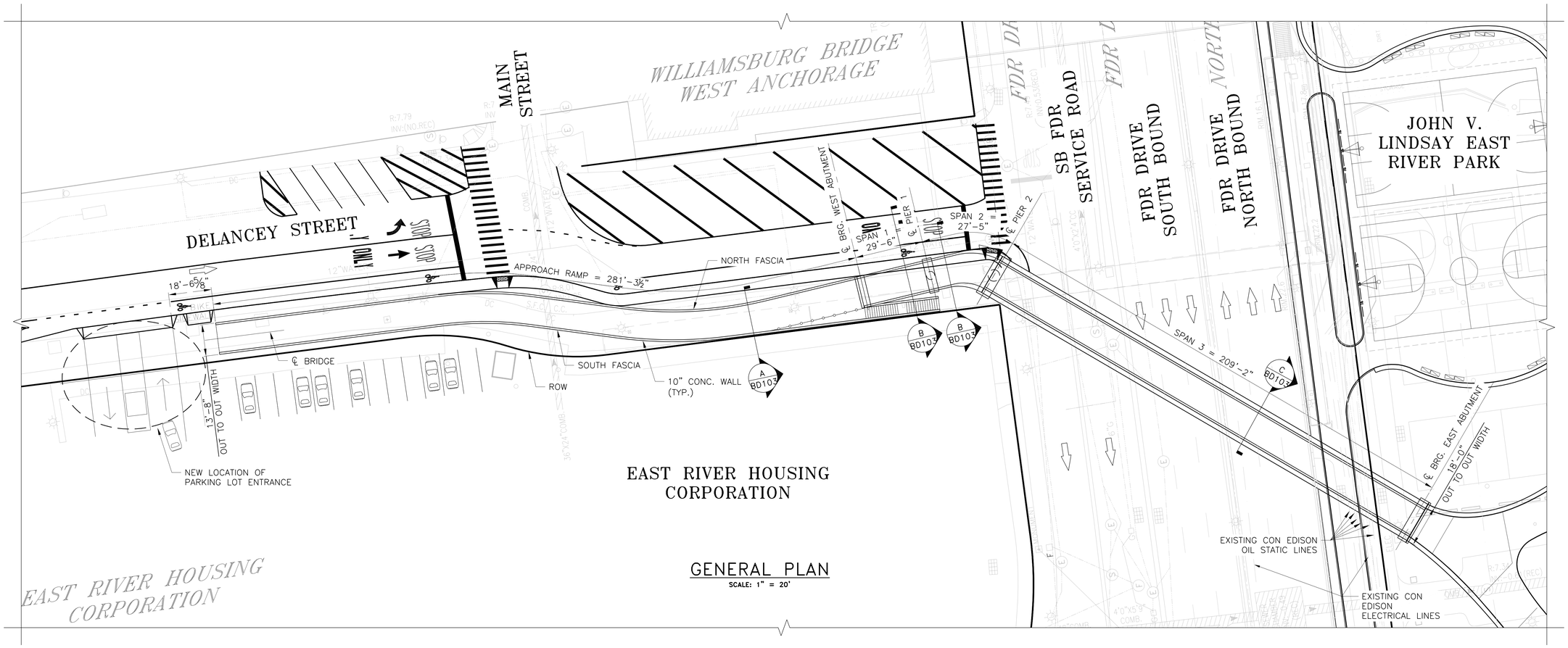


GENERAL PLAN

SCALE: 1" = 20'

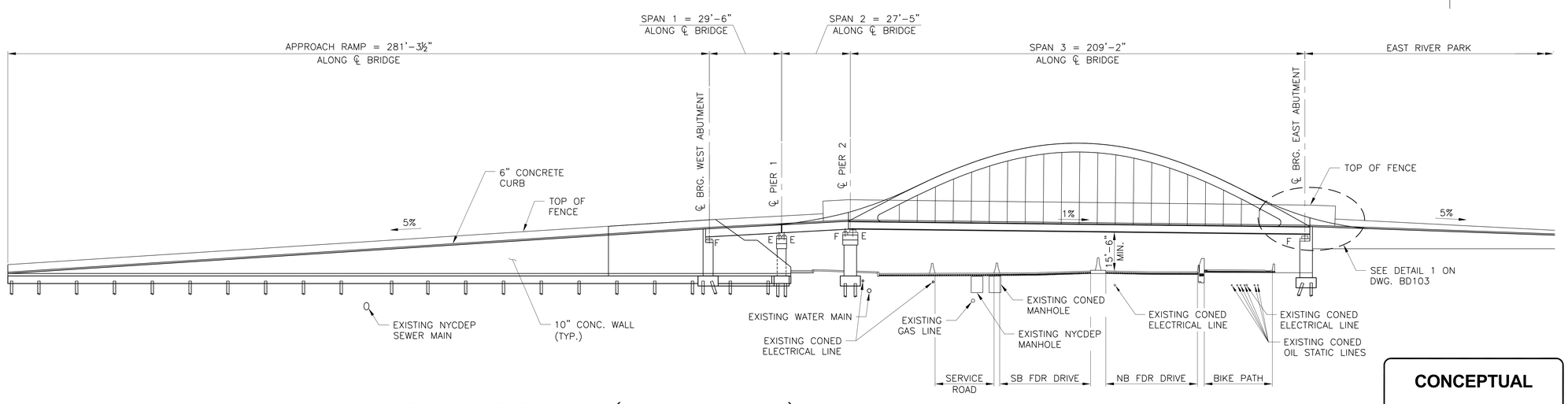


GENERAL ELEVATION (LOOKING NORTH)

SCALE: 1" = 20'

**CONCEPTUAL**

SUBMITTED DATE: 1/31/19

| NO. | DATE | DESCRIPTIONS | BY | APPR'D |
|---|---|---|---|---|
| | | | | |

REVISIONS

TOPOGRAPHIC SURVEY PREPARED BY: FOR SURVEYOR INFORMATION SEE SURVEY SET SU100 DRAWINGS SERIES

FINAL DESIGN SUBMITTED BY:
AKRF KSE
The AKRF-KSE JV

FINAL DESIGN PREPARED BY:
Hardesty & Hanover
1501 BROADWAY
NEW YORK, NY 10036
(212) 944-1150
HARDESTY & HANOVER, LLC
NAME OF CONSULTANT

SIGNATURE
DATE

CITY OF NEW YORK
DEPARTMENT OF DESIGN + CONSTRUCTION
DIVISION OF INFRASTRUCTURE
BUREAU OF DESIGN

DELANCEY STREET BRIDGE
GENERAL PLAN AND ELEVATION

HARDESTY & HANOVER, LLC — DRAWN BY
SANDRESM1-BD102-00.DWG — CADD FILE

INSTALLATION OF
EAST SIDE COASTAL RESILIENCY
BOROUGH OF MANHATTAN

CAPITAL PROJECT NO. SANDRESM1 1/31/19

SHEET 23 OF 811

BD102

CONSULTANT DESIGN

CONCEPTUAL REDESIGN SUBMISSION 1/31/2019

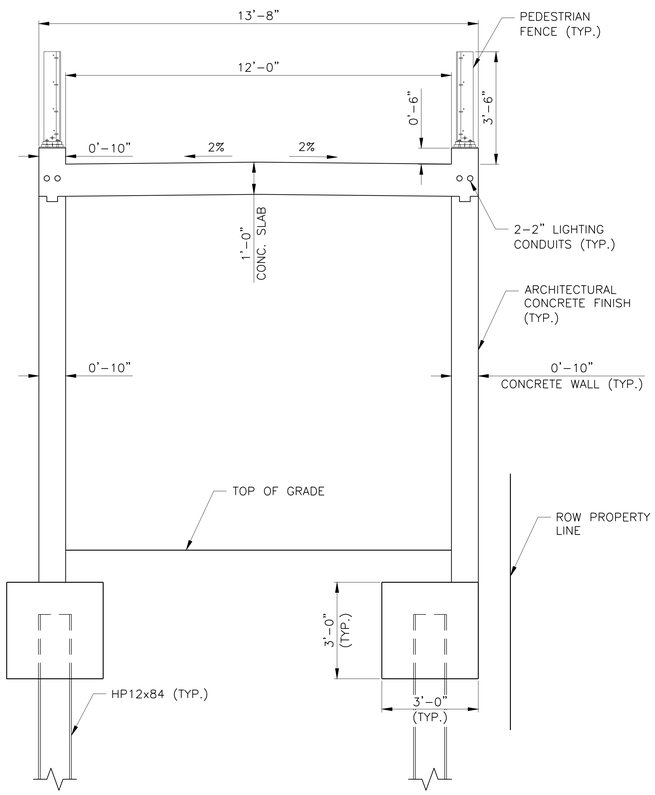


A BD102 CROSS SECTION
Scale: 1/2" = 1'-0"

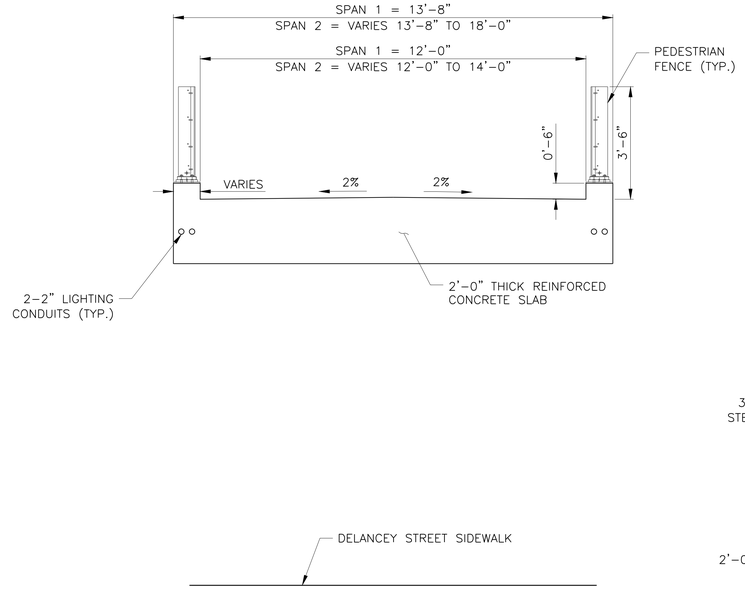


B BD102 CROSS SECTION
SCALE: 1/2" = 1'-0"

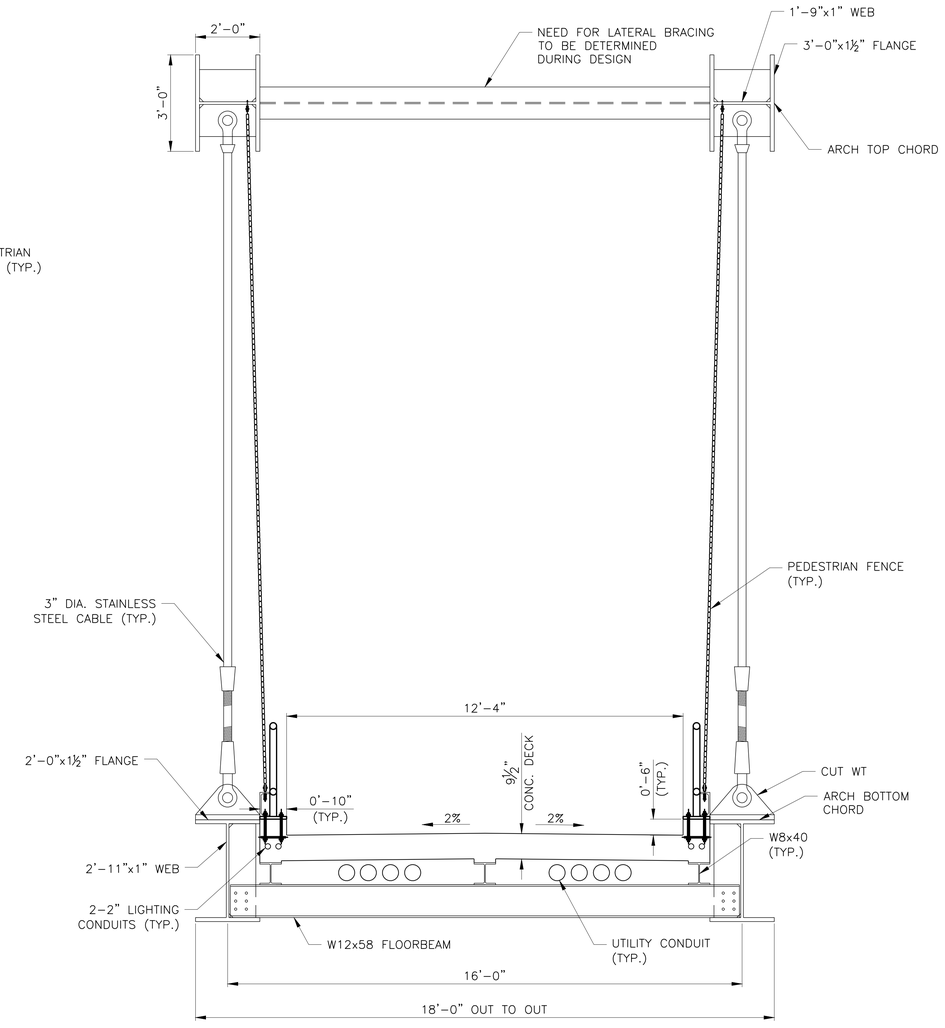


C BD102 CROSS SECTION
SCALE: 1/2" = 1'-0"

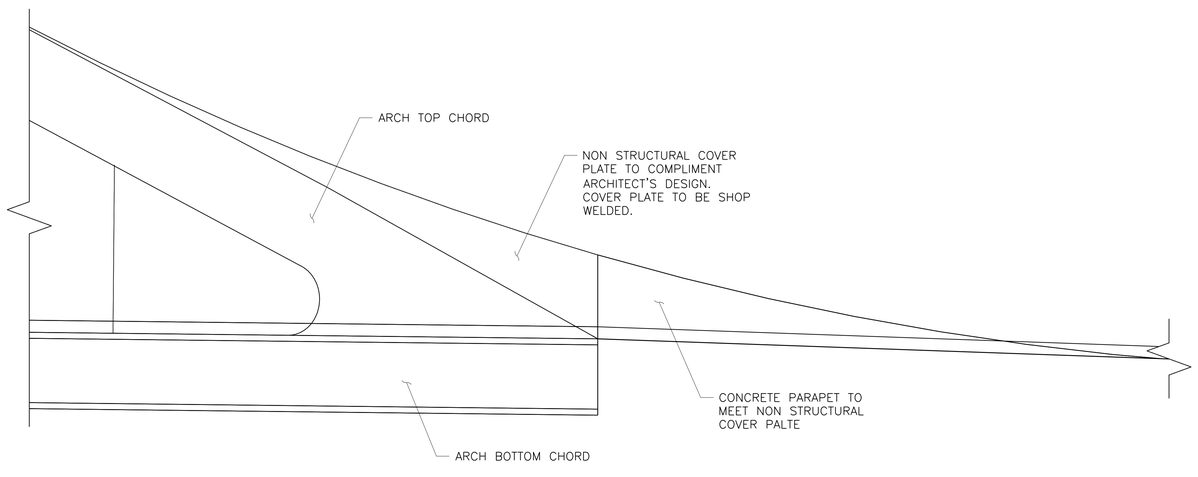


1 BD102 DETAIL
Scale: 3/8" = 1'-0"

**CONCEPTUAL**

SUBMITTED DATE: 1/31/19

TOPOGRAPHIC SURVEY PREPARED BY: FOR SURVEYOR
INFORMATION SEE SURVEY SET SU100 DRAWINGS SERIES

| NO. | DATE | DESCRIPTIONS | BY | APPR'D |
|---|---|---|---|---|
| | | | | |
| | | | | |
| | | | | |
| | | | | |

REVISIONS

FINAL DESIGN SUBMITTED BY: AKRF KSE — The AKRF-KSE JV

FINAL DESIGN PREPARED BY: Hardesty & Hanover, 1501 BROADWAY, NEW YORK, NY 10036, (212) 944-1150
HARDESTY & HANOVER, LLC — NAME OF CONSULTANT
SIGNATURE
DATE

CITY OF NEW YORK
DEPARTMENT OF DESIGN + CONSTRUCTION
DIVISION OF INFRASTRUCTURE
BUREAU OF DESIGN

DELANCEY STREET BRIDGE
TYPICAL SECTIONS

HARDESTY & HANOVER, LLC — DRAWN BY
SANDRESM1-BD102-00.DWG — CADD FILE

INSTALLATION OF
EAST SIDE COASTAL RESILIENCY
BOROUGH OF MANHATTAN

CAPITAL PROJECT NO. SANDRESM1 1/31/19
SHEET 24 OF 811
BD103

CONSULTANT DESIGN

CONCEPTUAL REDESIGN SUBMISSION 1/31/2019

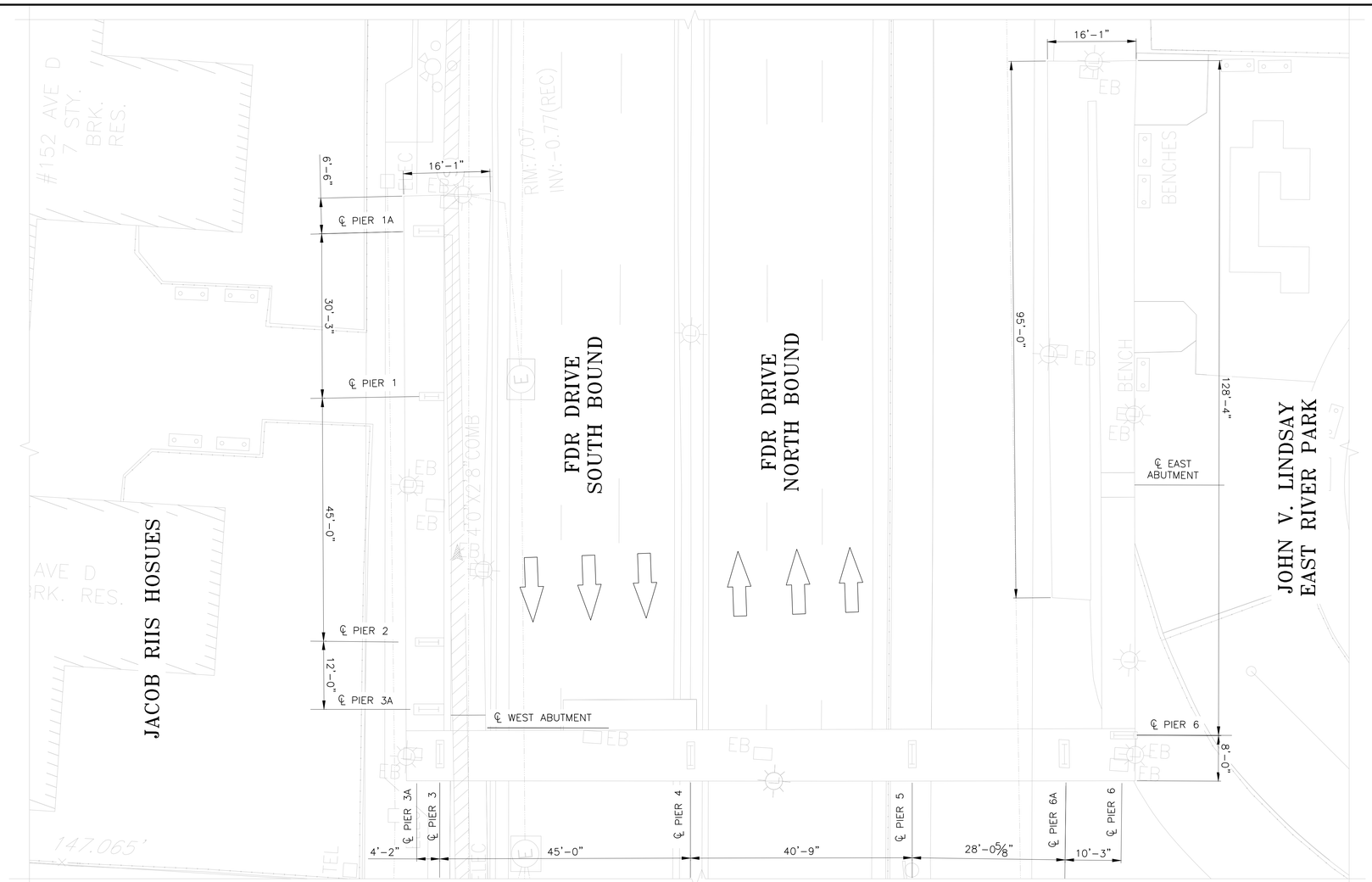


## GENERAL PLAN

SCALE: 1" = 10'

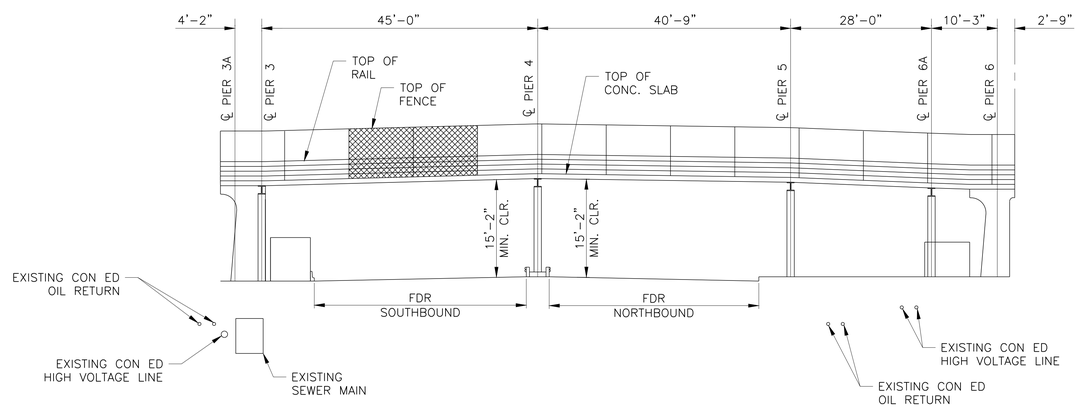


## GENERAL ELEVATION (LOOKING NORTH)

SCALE: 1" = 10'

**CONCEPTUAL**

SUBMITTED DATE: 1/31/19

TOPOGRAPHIC SURVEY PREPARED BY: FOR SURVEYOR
INFORMATION SEE SURVEY SET SU100 DRAWINGS SERIES

| NO. | DATE | DESCRIPTIONS | BY | APPR'D |
|---|---|---|---|---|
| | | | | |
| | | | | |
| | | | | |
| | | | | |

REVISIONS

FINAL DESIGN SUBMITTED BY:
AKRF KSE
The AKRF-KSE JV

FINAL DESIGN PREPARED BY:
Hardesty & Hanover
1501 BROADWAY
NEW YORK, NY 10036
(212) 944-1150
HARDESTY & HANOVER, LLC
NAME OF CONSULTANT

SIGNATURE
DATE

CITY OF NEW YORK
DEPARTMENT OF DESIGN + CONSTRUCTION
DIVISION OF INFRASTRUCTURE
BUREAU OF DESIGN

EAST 10TH STREET BRIDGE
EXISTING GENERAL PLAN AND ELEVATION

HARDESTY & HANOVER, LLC
DRAWN BY

SANDRESM1-BT100-00.DWG
CADD FILE

INSTALLATION OF
EAST SIDE COASTAL RESILIENCY
BOROUGH OF MANHATTAN

CAPITAL PROJECT NO. SANDRESM1 1/31/19

SHEET 28 OF 811

BT100

CONSULTANT DESIGN

CONCEPTUAL REDESIGN SUBMISSION 1/31/2019

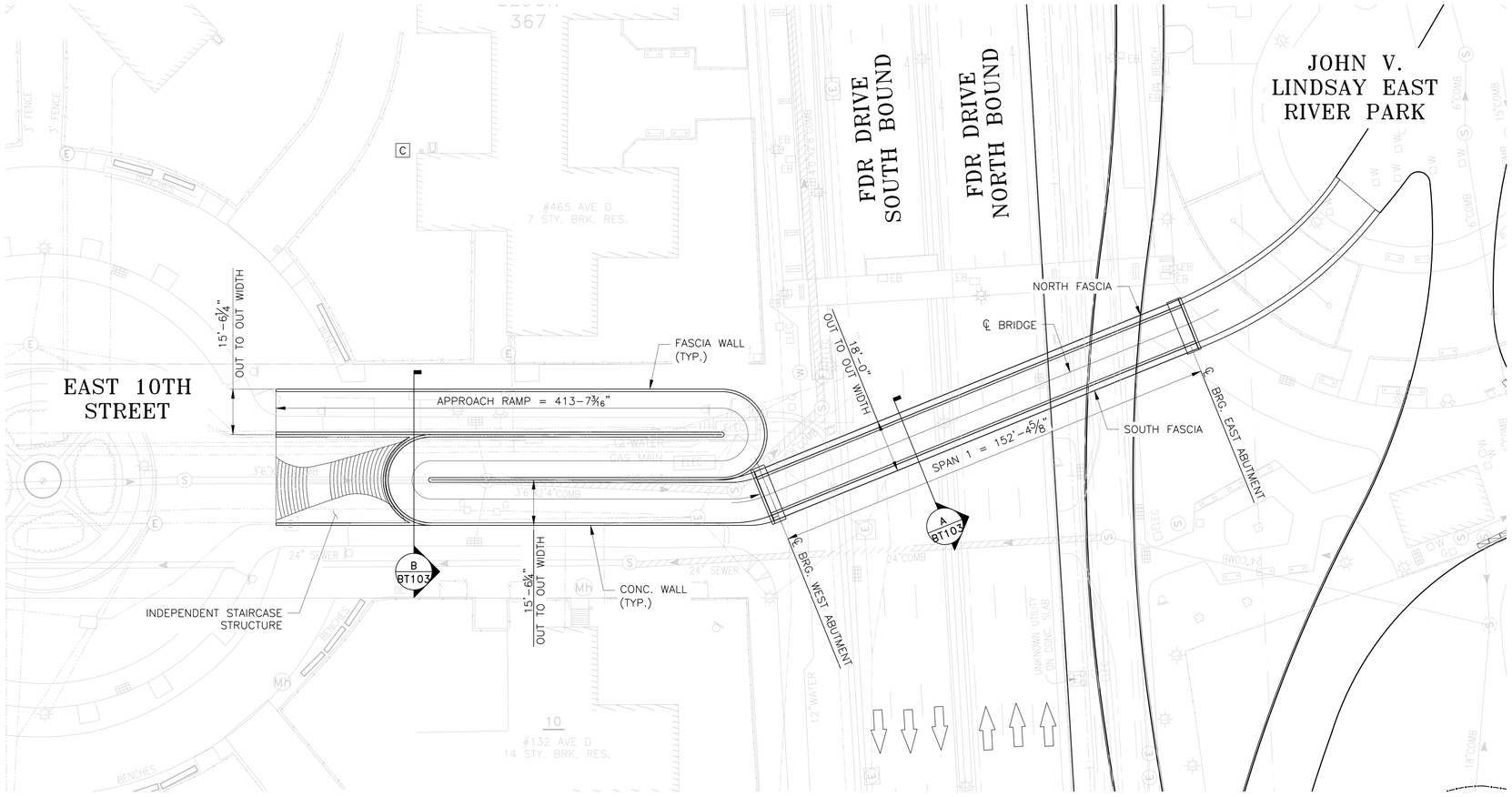


## GENERAL PLAN

SCALE: 1" = 20'

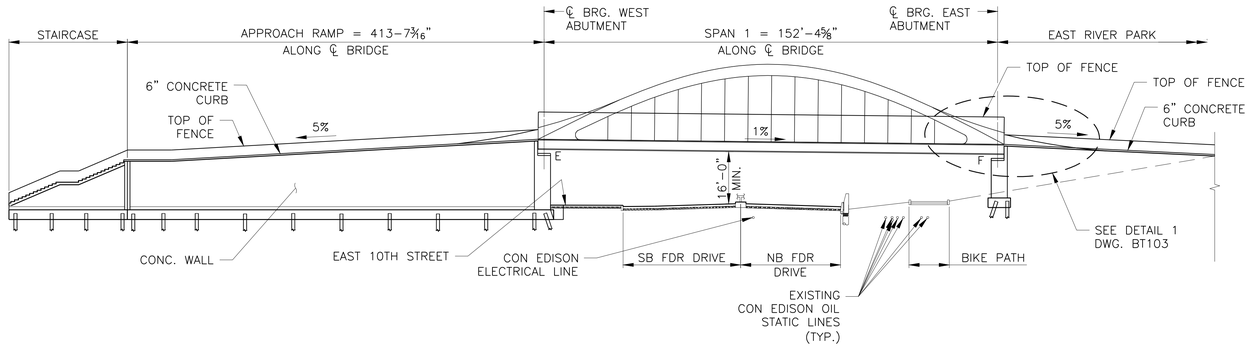


## GENERAL ELEVATION

SCALE: 1" = 20'

**CONCEPTUAL**

SUBMITTED DATE: 1/31/19

TOPOGRAPHIC SURVEY PREPARED BY: FOR SURVEYOR INFORMATION SEE SURVEY SET SU100 DRAWINGS SERIES

| NO. | DATE | DESCRIPTIONS | BY | APPR'D |
|---|---|---|---|---|
| | | REVISIONS | | |

FINAL DESIGN SUBMITTED BY: AKRF KSE — The AKRF-KSE JV

FINAL DESIGN PREPARED BY: Hardesty & Hanover, 1501 BROADWAY, NEW YORK, NY 10036, (212) 944-1150
HARDESTY & HANOVER, LLC — NAME OF CONSULTANT
SIGNATURE
DATE

CITY OF NEW YORK
DEPARTMENT OF DESIGN + CONSTRUCTION
DIVISION OF INFRASTRUCTURE
BUREAU OF DESIGN

EAST 10TH STREET BRIDGE
GENERAL PLAN AND ELEVATION

HARDESTY & HANOVER, LLC — DRAWN BY
SANDRESM1-BT102-00.DWG — CADD FILE

INSTALLATION OF
EAST SIDE COASTAL RESILIENCY
BOROUGH OF MANHATTAN

CAPITAL PROJECT NO. SANDRESM1 1/31/19
SHEET 30 OF 811
BT102

CONSULTANT DESIGN

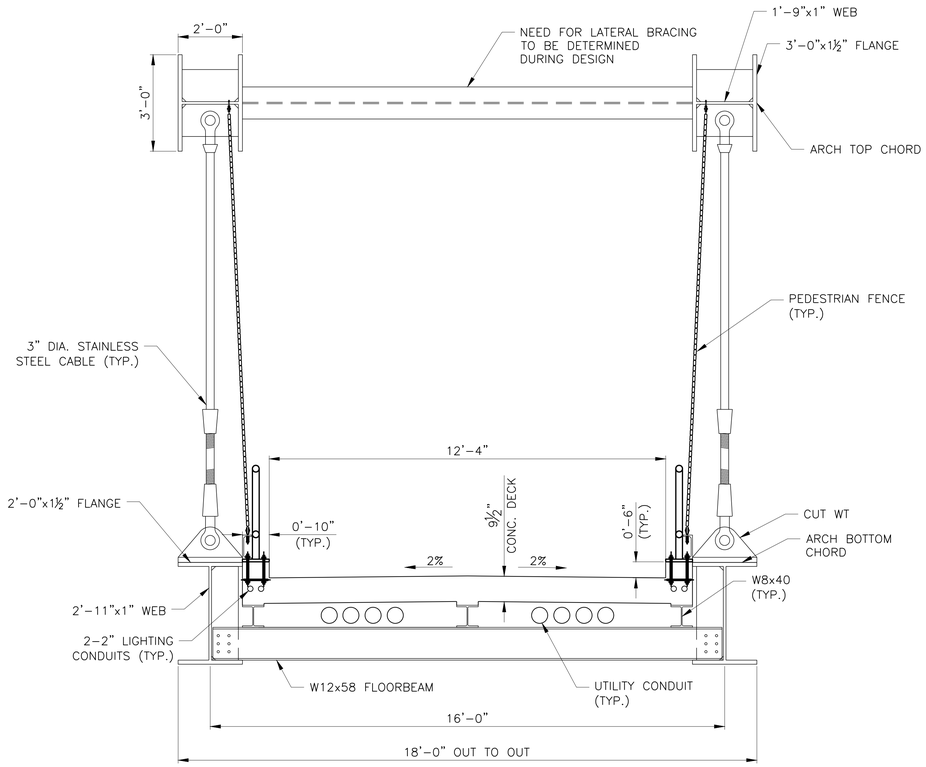


A BT102 CROSS SECTION
SCALE: 1/2" = 1'-0"

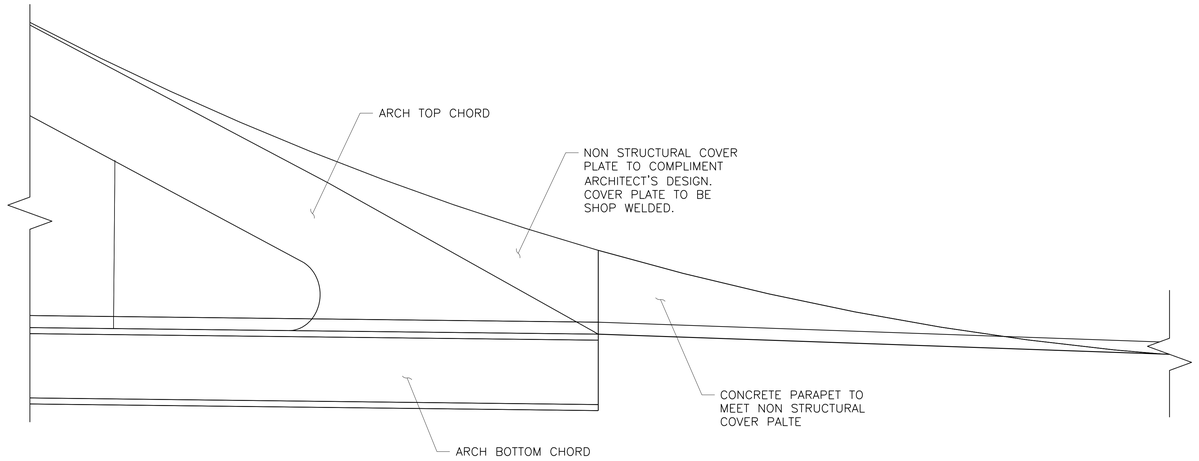


1 BT102 DETAIL
SCALE: 3/8" = 1'-0"

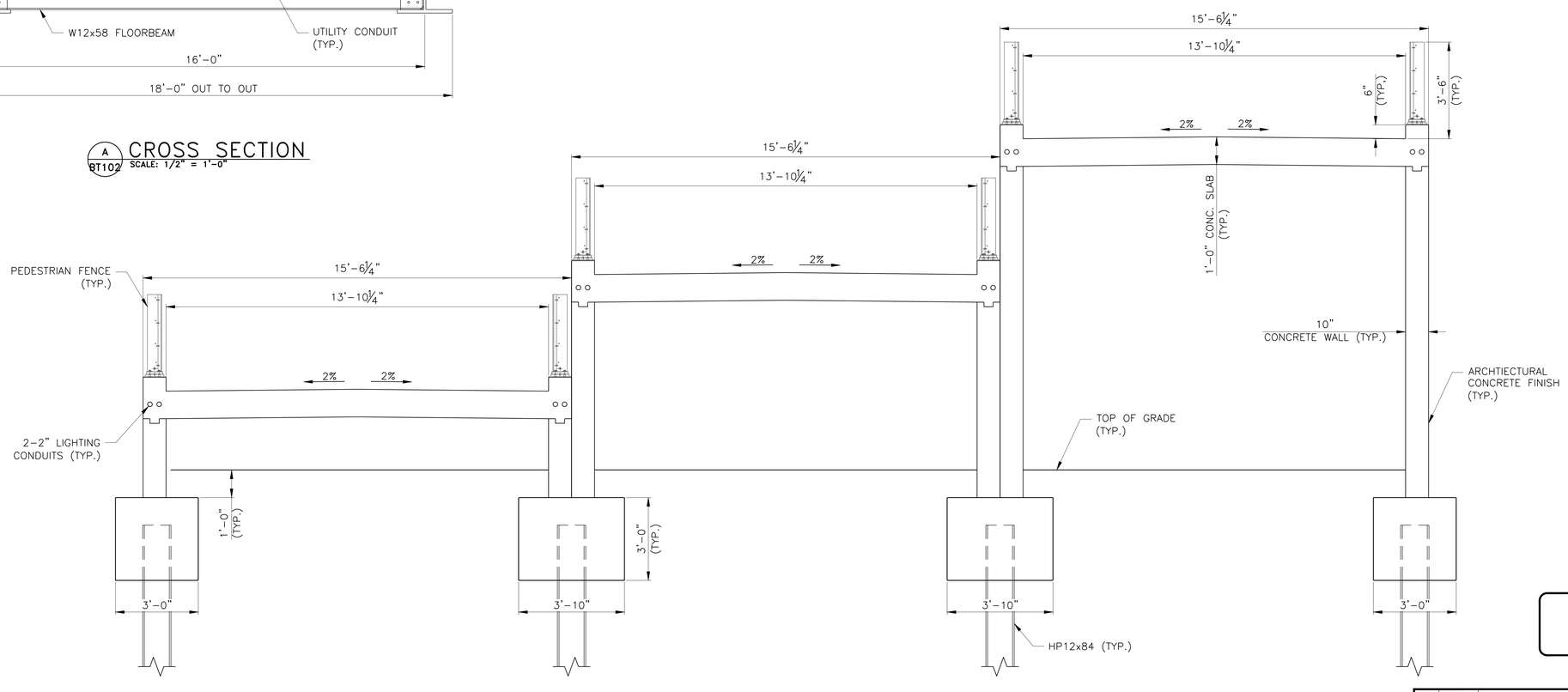


B BT102 CROSS SECTION
SCALE: 1/2" = 1'-0"

**CONCEPTUAL**

SUBMITTED DATE: 1/31/19

CONCEPTUAL REDESIGN SUBMISSION 1/31/2019

TOPOGRAPHIC SURVEY PREPARED BY: FOR SURVEYOR INFORMATION SEE SURVEY SET SU100 DRAWINGS SERIES

| NO. | DATE | DESCRIPTIONS | BY | APPR'D |
|---|---|---|---|---|
| | | | | |

REVISIONS

FINAL DESIGN SUBMITTED BY:
AKRF KSE
The AKRF-KSE JV

FINAL DESIGN PREPARED BY:
Hardesty & Hanover
1501 BROADWAY NEW YORK, NY 10036 (212) 944-1150
HARDESTY & HANOVER, LLC
NAME OF CONSULTANT

SIGNATURE
DATE

CITY OF NEW YORK
DEPARTMENT OF DESIGN + CONSTRUCTION
DIVISION OF INFRASTRUCTURE
BUREAU OF DESIGN

EAST 10TH STREET BRIDGE
TYPICAL SECTIONS

HARDESTY & HANOVER, LLC — DRAWN BY
SANDRESM1-BT103-00.DWG — CADD FILE

INSTALLATION OF
EAST SIDE COASTAL RESILIENCY
BOROUGH OF MANHATTAN

CAPITAL PROJECT NO. SANDRESM1 1/31/19

SHEET 31 OF 811

BT103

CONSULTANT DESIGN

CONCEPTUAL REDESIGN SUBMISSION 1/31/2019

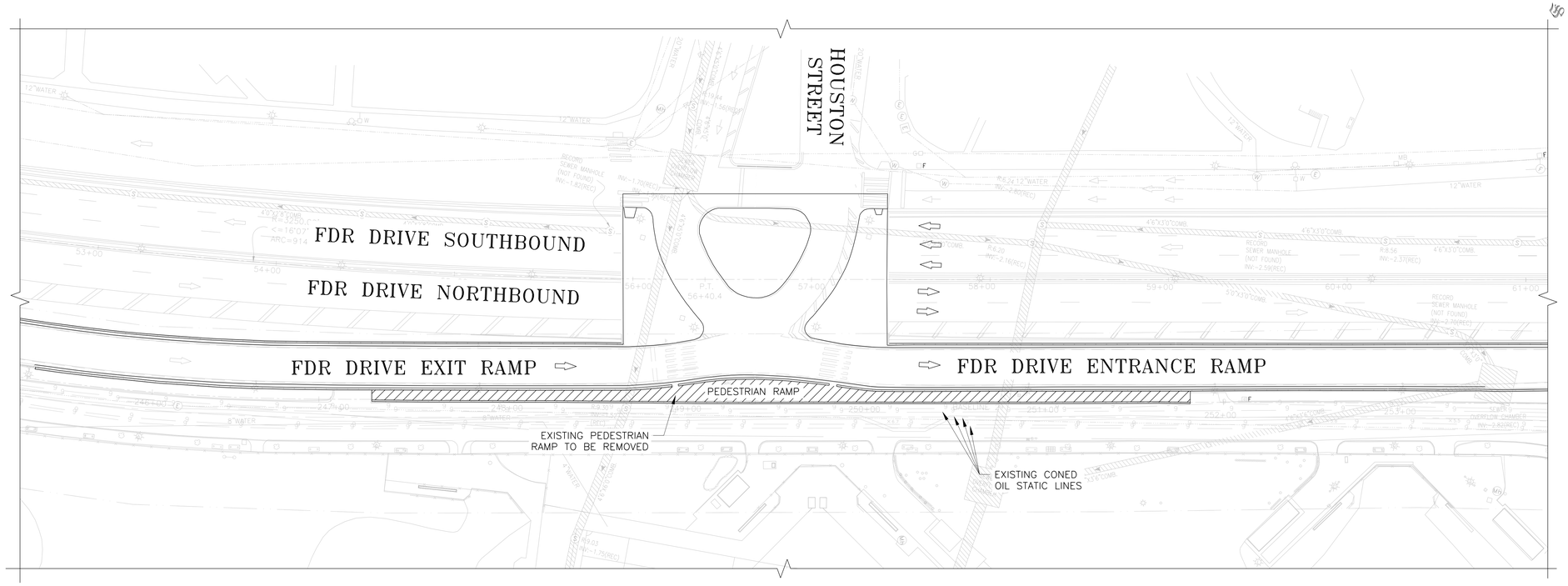


## EXISTING GENERAL PLAN

SCALE: 1" = 30'

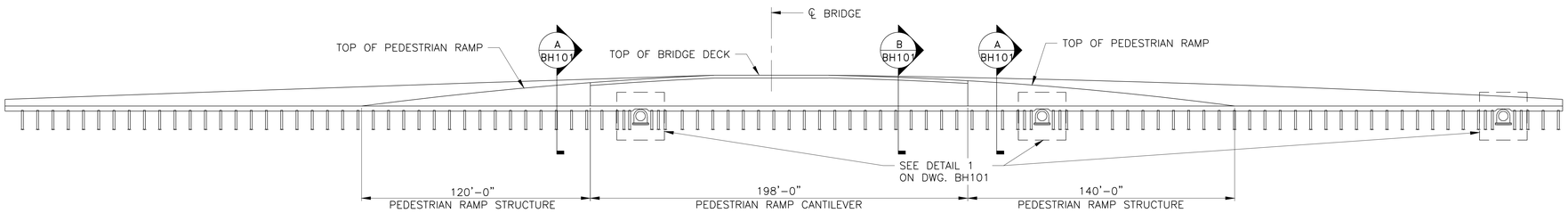


## EXISTING GENERAL ELEVATION (LOOKING WEST)

SCALE: 1" = 30'

**CONCEPTUAL**

SUBMITTED DATE: 1/31/19

| NO. | DATE | DESCRIPTIONS | BY | APPR'D |
|---|---|---|---|---|
| | | | | |

REVISIONS

TOPOGRAPHIC SURVEY PREPARED BY: FOR SURVEYOR INFORMATION SEE SURVEY SET SU100 DRAWINGS SERIES

FINAL DESIGN SUBMITTED BY: AKRF KSE — The AKRF-KSE JV

FINAL DESIGN PREPARED BY: Hardesty & Hanover, 1501 BROADWAY, NEW YORK, NY 10036, (212) 944-1100

HARDESTY & HANOVER, LLC — NAME OF CONSULTANT

SIGNATURE

DATE

CITY OF NEW YORK
DEPARTMENT OF DESIGN + CONSTRUCTION
DIVISION OF INFRASTRUCTURE
BUREAU OF DESIGN

HOUSTON STREET BRIDGE
EXISTING GENERAL PLAN AND ELEVATION

HARDESTY & HANOVER, LLC — DRAWN BY

SANDRESM1-BH100-00.DWG — CADD FILE

INSTALLATION OF
EAST SIDE COASTAL RESILIENCY
BOROUGH OF MANHATTAN

CAPITAL PROJECT NO. SANDRESM1 1/31/19

SHEET 35 OF 811

BH100

CONSULTANT DESIGN

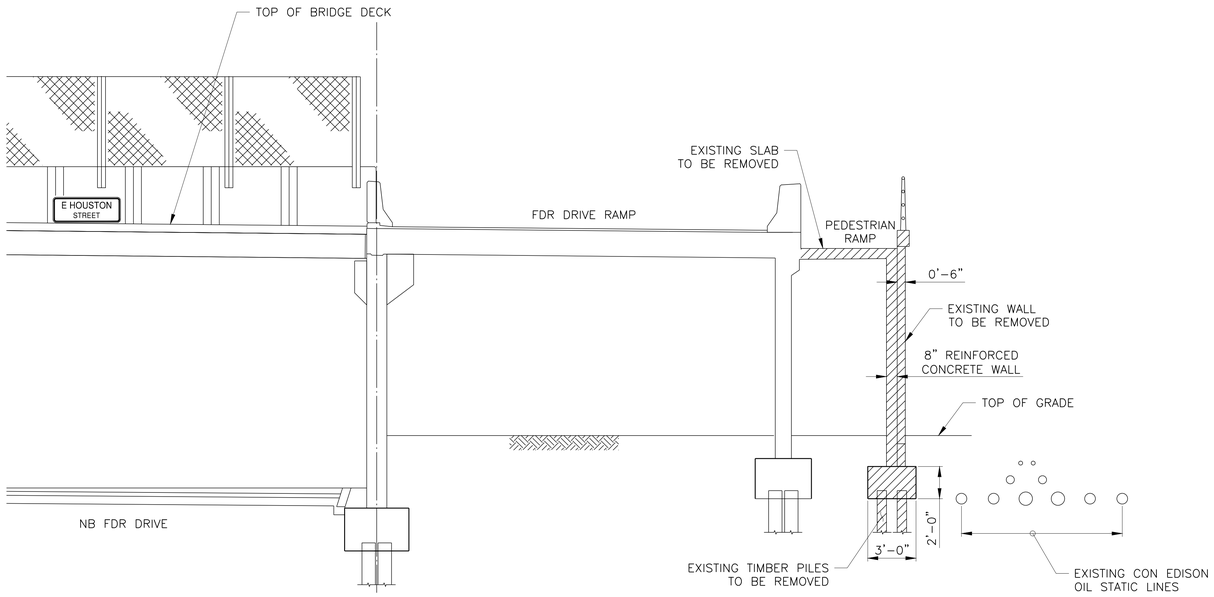


A BH100 CROSS SECTION
SCALE: 1/4" = 1'-0"

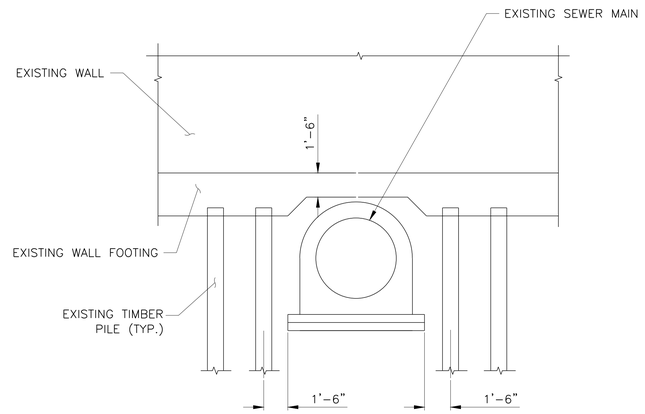


1 BH100 DETAIL 1
SCALE: 1/4" = 1'-0"

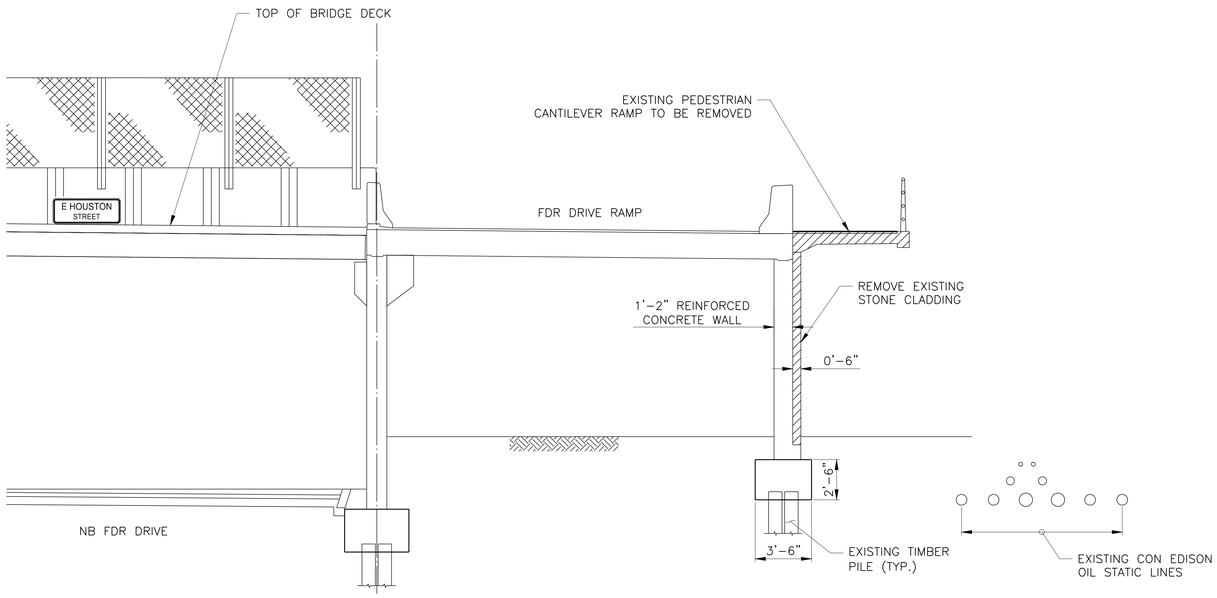


B BH100 SECTION B-B
SCALE: 1/4" = 1'-0"

**CONCEPTUAL**

SUBMITTED DATE: 1/31/19

TOPOGRAPHIC SURVEY PREPARED BY: FOR SURVEYOR INFORMATION SEE SURVEY SET SU100 DRAWINGS SERIES

| NO. | DATE | DESCRIPTIONS | BY | APPR'D |
|---|---|---|---|---|
| | | | | |
| | | | | |
| | | | | |
| | | | | |

REVISIONS

FINAL DESIGN SUBMITTED BY:
AKRF KSE
The AKRF-KSE JV

FINAL DESIGN PREPARED BY:
Hardesty & Hanover
1501 BROADWAY
NEW YORK, NY 10036
(212) 944-1100
HARDESTY & HANOVER, LLC
NAME OF CONSULTANT

SIGNATURE
DATE

CITY OF NEW YORK
DEPARTMENT OF DESIGN + CONSTRUCTION
DIVISION OF INFRASTRUCTURE
BUREAU OF DESIGN

HOUSTON STREET BRIDGE
EXISTING TYPICAL SECTIONS

HARDESTY & HANOVER, LLC — DRAWN BY
SANDRESM1-BH101-00.DWG — CADD FILE

INSTALLATION OF
EAST SIDE COASTAL RESILIENCY
BOROUGH OF MANHATTAN

CAPITAL PROJECT NO. SANDRESM1 1/31/19
SHEET 36 OF 811
BH101

CONSULTANT DESIGN

CONCEPTUAL REDESIGN SUBMISSION 1/31/2019

CONCEPTUAL REDESIGN SUBMISSION 1/31/2019

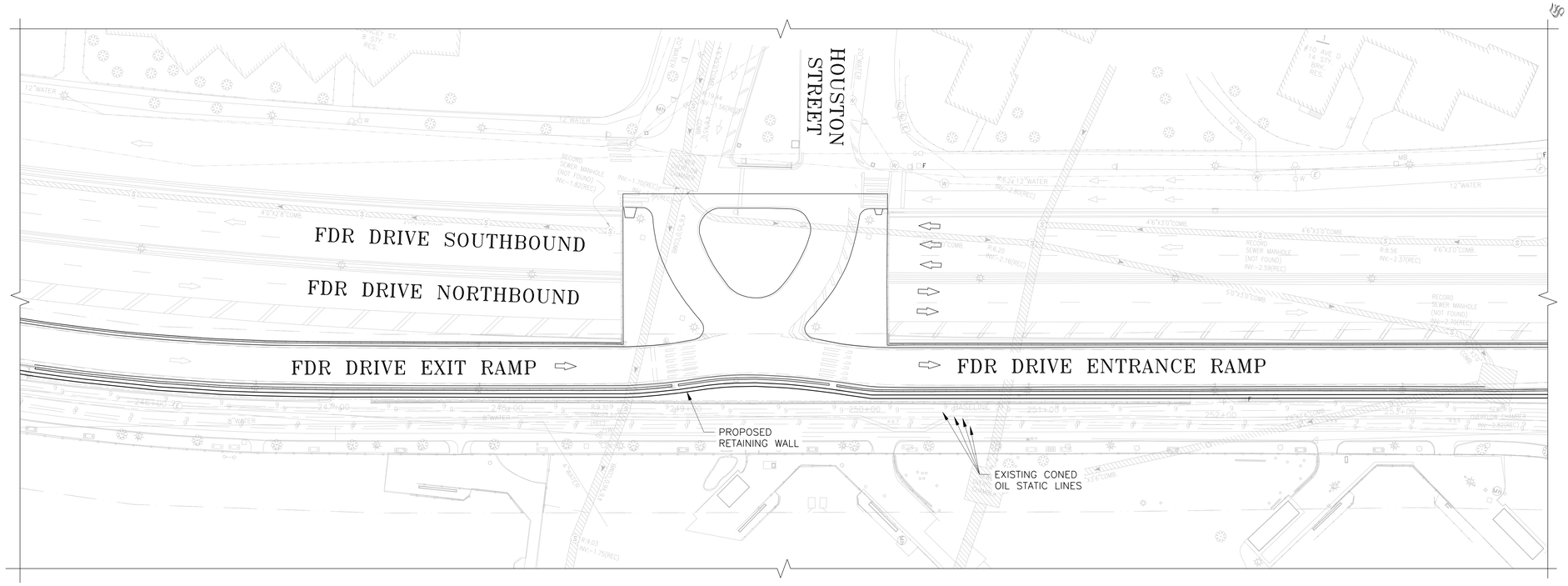


## GENERAL PLAN

SCALE: 1" = 30'

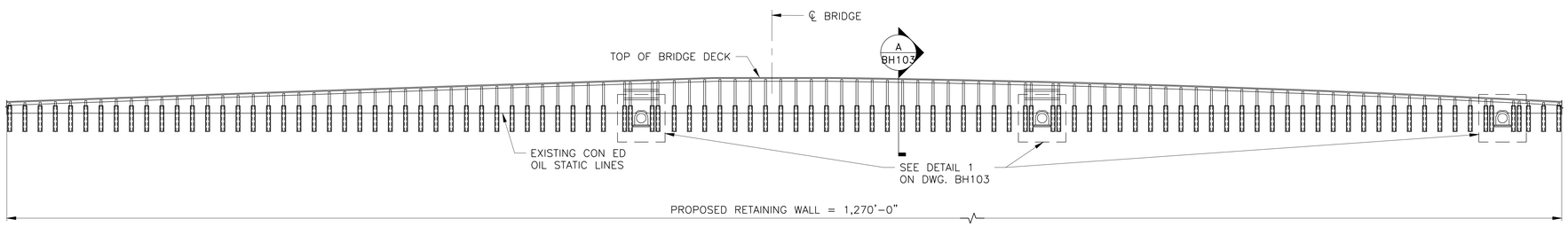


## GENERAL ELEVATION (LOOKING WEST)

SCALE: 1" = 30'

**CONCEPTUAL**

SUBMITTED DATE: 1/31/19

| NO. | DATE | DESCRIPTIONS | BY | APPR'D |
|---|---|---|---|---|
| | | | | |

REVISIONS

TOPOGRAPHIC SURVEY PREPARED BY: FOR SURVEYOR INFORMATION SEE SURVEY SET SU100 DRAWINGS SERIES

FINAL DESIGN SUBMITTED BY: AKRF KSE — The AKRF-KSE JV

FINAL DESIGN PREPARED BY: Hardesty & Hanover, 1501 BROADWAY, NEW YORK, NY 10036, (212) 944-1100

HARDESTY & HANOVER, LLC — NAME OF CONSULTANT

SIGNATURE

DATE

CITY OF NEW YORK
DEPARTMENT OF DESIGN + CONSTRUCTION
DIVISION OF INFRASTRUCTURE
BUREAU OF DESIGN

HOUSTON STREET BRIDGE
GENERAL PLAN AND ELEVATION

HARDESTY & HANOVER, LLC — DRAWN BY

SANDRESM1-BH102-00.DWG — CADD FILE

INSTALLATION OF
EAST SIDE COASTAL RESILIENCY
BOROUGH OF MANHATTAN

CAPITAL PROJECT NO. SANDRESM1 1/31/19

SHEET 37 OF 811

BH102

CONSULTANT DESIGN

CONCEPTUAL REDESIGN SUBMISSION 1/31/2019

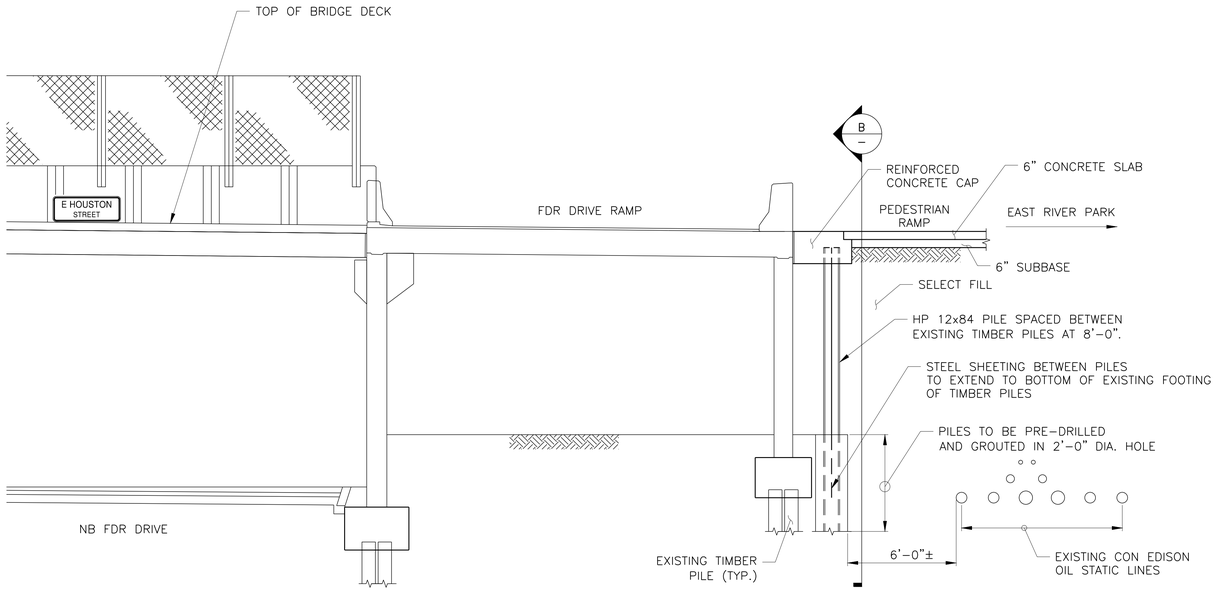


A BH102 CROSS SECTION
SCALE: 1/4" = 1'-0"

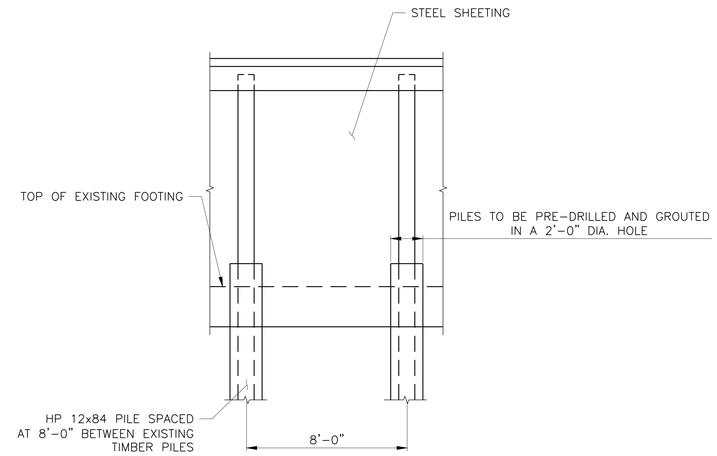


B CROSS SECTION
SCALE: 1/4" = 1'-0"

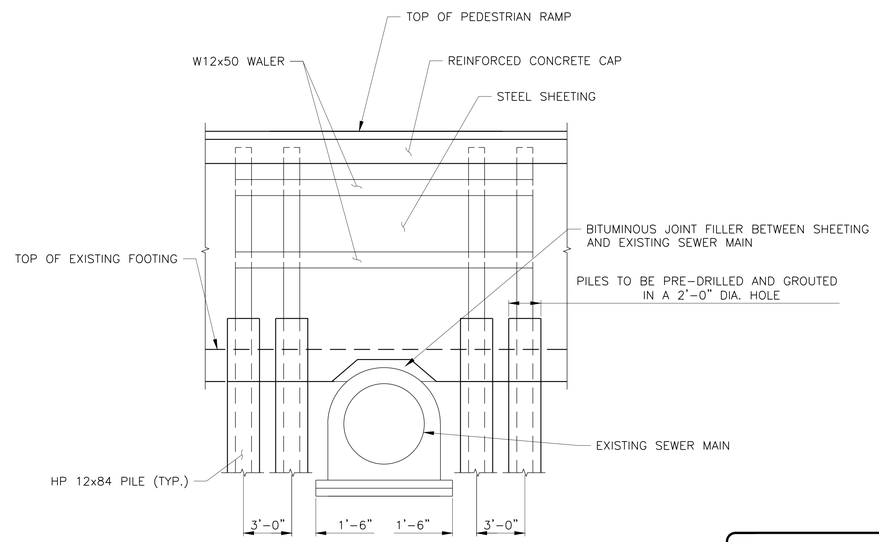


1 BH102 DETAIL 1
SCALE: 1/4" = 1'-0"

**CONCEPTUAL**

SUBMITTED DATE: 1/31/19

| NO. | DATE | DESCRIPTIONS | BY | APPR'D |
|---|---|---|---|---|
| | | | | |

REVISIONS

TOPOGRAPHIC SURVEY PREPARED BY: FOR SURVEYOR INFORMATION SEE SURVEY SET SU100 DRAWINGS SERIES

FINAL DESIGN SUBMITTED BY: AKRF KSE — The AKRF-KSE JV

FINAL DESIGN PREPARED BY: Hardesty & Hanover, 1501 BROADWAY NEW YORK, NY 10036 (212) 944-1100
HARDESTY & HANOVER, LLC
NAME OF CONSULTANT
SIGNATURE
DATE

CITY OF NEW YORK
DEPARTMENT OF DESIGN + CONSTRUCTION
DIVISION OF INFRASTRUCTURE
BUREAU OF DESIGN

HOUSTON STREET BRIDGE
TYPICAL SECTIONS

HARDESTY & HANOVER, LLC — DRAWN BY
SANDRESM1-BH103-00.DWG — CADD FILE

INSTALLATION OF
EAST SIDE COASTAL RESILIENCY
BOROUGH OF MANHATTAN

CAPITAL PROJECT NO. SANDRESM1 1/31/19
SHEET 38 OF 811
BH103

CONSULTANT DESIGN