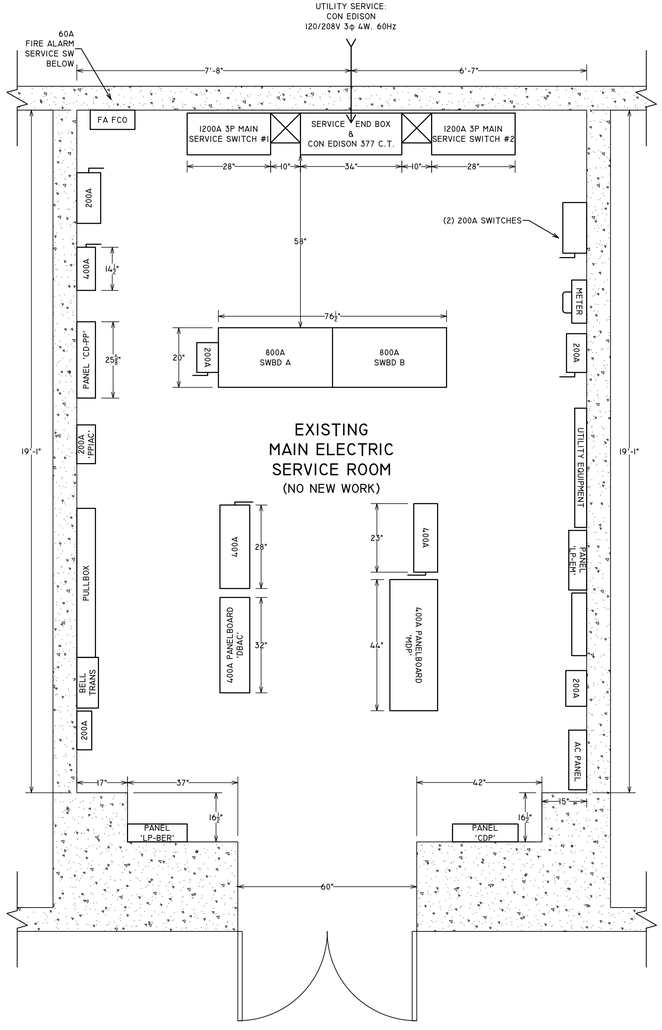
UTILITY SERVICE:
CON EDISON
120/208V 3φ 4W. 60Hz
60A
FIRE ALARM
SERVICE SW
BELOW
7'-8"
6'-7"
FA FCO
1200A 3P MAIN
SERVICE SWITCH #1
SERVICE END BOX
&
CON EDISON 377 C.T.
1200A 3P MAIN
SERVICE SWITCH #2
28"
10"
34"
10"
28"
(2) 200A SWITCHES
58"
76½"
20"
200A
800A
SWBD A
800A
SWBD B
200A
400A
14½"
PANEL 'CD-PP'
25⅝"
200A
'PPIAC'
PULLBOX
BELL
TRANS
200A
METER
200A
UTILITY EQUIPMENT
PANEL
'LP-EM'
200A
AC PANEL
EXISTING
MAIN ELECTRIC
SERVICE ROOM
(NO NEW WORK)
400A
28"
400A PANELBOARD
'DBAC'
32"
23"
400A
44"
400A PANELBOARD
'MDP'
19'-1"
19'-1"
17"
37"
42"
15"
16½"
16½"
PANEL
'LP-BER'
PANEL
'CDP'
60"

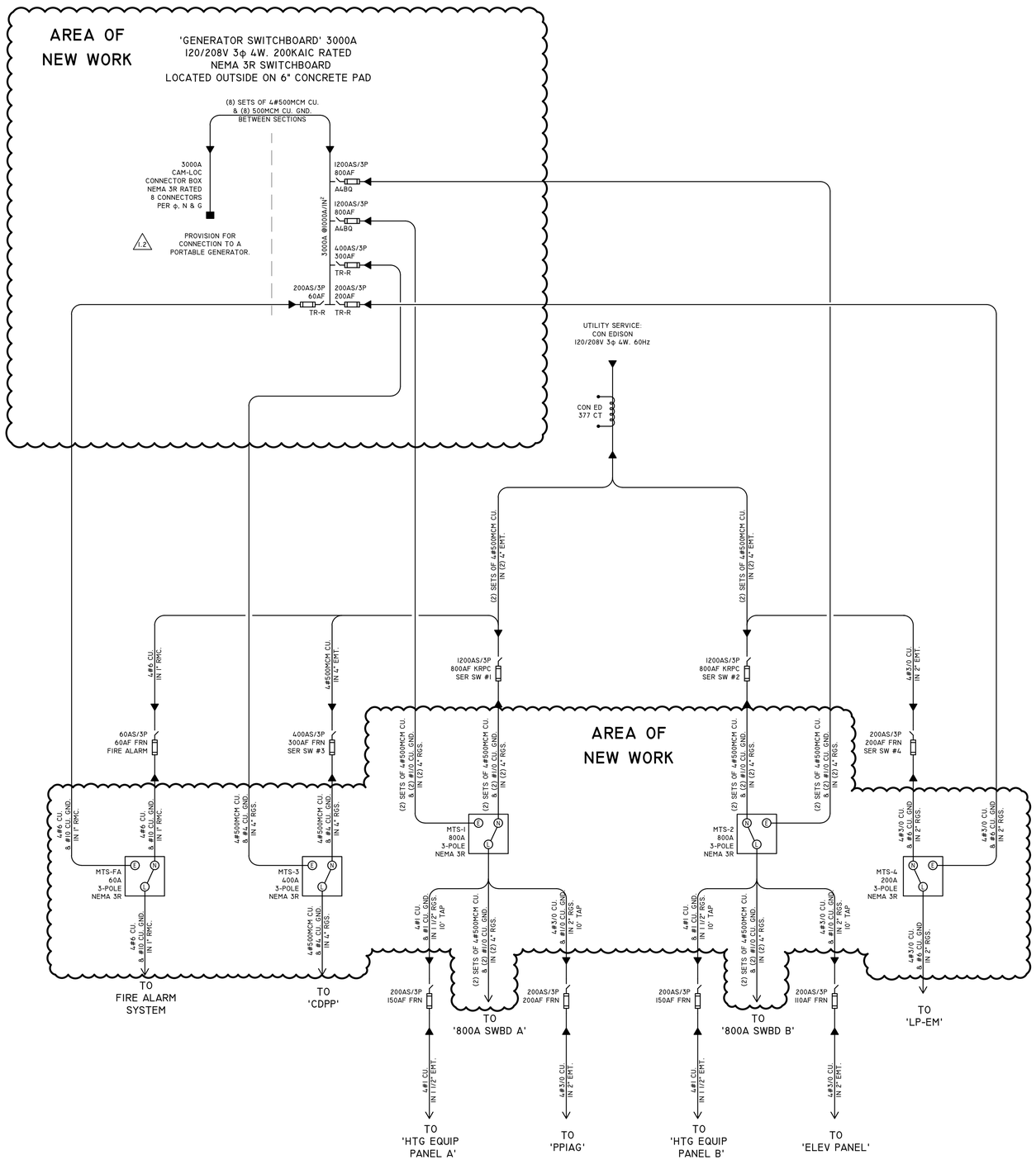
AREA OF
NEW WORK
'GENERATOR SWITCHBOARD' 3000A
120/208V 3φ 4W. 200KAIC RATED
NEMA 3R SWITCHBOARD
LOCATED OUTSIDE ON 6" CONCRETE PAD
(8) SETS OF 4#500MCM CU.
& (8) 500MCM CU. GND.
BETWEEN SECTIONS
3000A
CAM-LOC
CONNECTOR BOX
NEMA 3R RATED
8 CONNECTORS
PER φ, N & G
PROVISION FOR
CONNECTION TO A
PORTABLE GENERATOR.
1.2
1200AS/3P
800AF
A4BQ
1200AS/3P
800AF
A4BQ
3000A @1000A/IN²
400AS/3P
300AF
TR-R
200AS/3P
60AF
TR-R
200AS/3P
200AF
TR-R
UTILITY SERVICE:
CON EDISON
120/208V 3φ 4W. 60Hz
CON ED
377 CT
(2) SETS OF 4#500MCM CU.
IN (2) 4" EMT.
(2) SETS OF 4#500MCM CU.
IN (2) 4" EMT.
4#6 CU.
IN 1" RMC.
4#500MCM CU.
IN 4" EMT.
1200AS/3P
800AF KRPC
SER SW #1
1200AS/3P
800AF KRPC
SER SW #2
4#3/0 CU.
IN 2" EMT.
60AS/3P
60AF FRN
FIRE ALARM
400AS/3P
300AF FRN
SER SW #3
AREA OF
NEW WORK
200AS/3P
200AF FRN
SER SW #4
(2) SETS OF 4#500MCM CU.
& (2) #1/0 CU. GND.
IN (2) 4" RGS.
4#6 CU.
& #10 CU. GND.
IN 1" RMC.
4#500MCM CU.
& #4 CU. GND.
IN 4" RGS.
4#500MCM CU.
& #4 CU. GND.
IN 4" RGS.
MTS-1
800A
3-POLE
NEMA 3R
MTS-2
800A
3-POLE
NEMA 3R
4#3/0 CU.
& #6 CU. GND.
IN 2" RGS.
4#3/0 CU.
& #6 CU. GND.
IN 2" RGS.
MTS-FA
60A
3-POLE
NEMA 3R
MTS-3
400A
3-POLE
NEMA 3R
MTS-4
200A
3-POLE
NEMA 3R
4#1 CU.
& #1 CU. GND.
IN 1 1/2" RGS.
10' TAP
4#3/0 CU.
& #1/0 CU. GND.
IN 2" RGS.
10' TAP
4#1 CU.
& #1 CU. GND.
IN 1 1/2" RGS.
10' TAP
4#3/0 CU.
& #1/0 CU. GND.
IN 2" RGS.
10' TAP
4#3/0 CU.
& #6 CU. GND.
IN 2" RGS.
TO
FIRE ALARM
SYSTEM
TO
'CDPP'
200AS/3P
150AF FRN
TO
'800A SWBD A'
200AS/3P
200AF FRN
200AS/3P
150AF FRN
TO
'800A SWBD B'
200AS/3P
110AF FRN
TO
'LP-EM'
4#1 CU.
IN 1 1/2" EMT.
4#3/0 CU.
IN 2" EMT.
4#1 CU.
IN 1 1/2" EMT.
4#3/0 CU.
IN 2" EMT.
TO
'HTG EQUIP
PANEL A'
TO
'PPIAG'
TO
'HTG EQUIP
PANEL B'
TO
'ELEV PANEL'

1.1