1243-1275 WOODROW ROAD

STATEN ISLAND, NEW YORK

Remedial Action Work Plan

NYC VCP Number: 12CVCP063R
E-Designation Site Number: 12RH-A148R

Prepared for:
WOODROW PLAZA, LLC
15 SEQUINE AVENUE
STATEN ISLAND, NEW YORK 10013

Prepared by:
GEI Consultants, Inc., P. C.
110 Walt Whitman Road, Suite 204
Huntington Station, NY 11746
(631) 760-9300

MARCH 2013

REMEDIAL ACTION WORK PLAN

TABLE OF CONTENTS

TABLE OF CONTENTS ii
FIGURES iv
APPENDICES v
LIST OF ACRONYMS vi
CERTIFICATION 1
EXECUTIVE SUMMARY 2
REMEDIAL ACTION WORK PLAN 11
1.0 SITE BACKGROUND 11
1.1 Site Location and Current Usage 11
1.2 Proposed Redevelopment Plan 11
1.3 Description of Surrounding Property 12
1.4 Remedial Investigation 12
2.0 REMEDIAL ACTION OBJECTIVES 16
3.0 REMEDIAL ALTERNATIVES ANALYSIS 17
3.1 Threshold Criteria 19
3.2. Balancing Criteria 19
4.0 REMEDIAL ACTION 25
4.1 Summary of Preferred Remedial Action 25
4.2 Soil Cleanup Objectives and Soil/Fill Management 26
4.3 Engineering Controls 27
4.4 Institutional Controls 28
4.5 Qualitative Human Health Exposure Assessment 29
5.0 REMEDIAL ACTION MANAGEMENT 33
5.1 Project Organization and Oversight 33
5.2 Site Security 33
5.3 Work Hours 33
5.4 Construction Health and Safety Plan 33
5.5 Community Air Monitoring Plan 34

5.6 Agency Approvals 35
5.7 Site Preparation 35
5.8 Traffic Control 39
5.9 Demobilization 39
5.10 Reporting and Record Keeping 39
5.11 Complaint Management 40
5.12 Deviations from the Remedial Action Work Plan 40
6.0 REMEDIAL ACTION REPORT 42
7.0 SCHEDULE 43
APPENDIX 1 PROPOSED DEVELOPMENT PLANS 44
APPENDIX 2 PREVIOUS ENVIRONMENTAL INVESTIGATIONS AND REPORTS ... 45
APPENDIX 3 SOIL/MATERIALS MANAGEMENT PLAN 46
1.1 Stockpile Methods 46
1.2 Characterization of Excavated Materials 46
1.3 Materials Excavation, Load-Out and Departure 46
1.4 Off-Site Materials Transport 47
1.6 Materials Disposal Off-Site 47
1.5 Materials Reuse On-Site 47
1.6 Fluids Management 48
1.8 Storm-water Pollution Prevention 48
1.9 Contingency Plan 49
1.10 Dust and Nuisance Control 49
APPENDIX 4 HEALTH AND SAFETY PLAN 51

FIGURES

List Figures

- Figure 1 – Site Location Map
- Figure 2 – Site Redevelopment Plan
- Figure 3 – Cut and Fill Plan

APPENDICES

List of Appendices

- Appendix 1 – Proposed Development Plans (Complete)
- Appendix 2 – Previous Environmental Investigations and Reports
- Appendix 3 – Soil/Materials Management Plan
- Appendix 4 – Construction Health and Safety Plan

LIST OF ACRONYMS

Acronym	Definition
AOC	Area of Concern
AS/SVE	Air Sparging/Soil Vapor Extraction
BOA	Brownfield Opportunity Area
CAMP	Community Air Monitoring Plan
C/D	Construction/Demolition
COC	Certificate of Completion
CQAP	Construction Quality Assurance Plan
CSOP	Contractors Site Operation Plan
DCR	Declaration of Covenants and Restrictions
ECs/ICs	Engineering and Institutional Controls
HASP	Health and Safety Plan
IRM	Interim Remedial Measure
BCA	Brownfield Cleanup Agreement
MNA	Monitored Natural Attenuation
NOC	Notice of Completion
NYC VCP	New York City Voluntary Cleanup Program
NYC DEP	New York City Department of Environmental Protection
NYC DOHMH	New York State Department of Health and Mental Hygiene
NYCRR	New York Codes Rules and Regulations
NYC OER	New York City Office of Environmental Remediation
NYS DEC	New York State Department of Environmental Conservation
NYS DEC DER	New York State Department of Environmental Conservation Division of Environmental Remediation
NYS DOH	New York State Department of Health
NYS DOT	New York State Department of Transportation
ORC	Oxygen-Release Compound
OSHA	United States Occupational Health and Safety Administration
PE	Professional Engineer

PID	Photo Ionization Detector
QEP	Qualified Environmental Professional
QHHEA	Qualitative Human Health Exposure Assessment
RAOs	Remedial Action Objectives
RAR	Remedial Action Report
RAWP	Remedial Action Work Plan or Plan
RCA	Recycled Concrete Aggregate
RD	Remedial Design
RI	Remedial Investigation
RMZ	Residual Management Zone
SCOs	Soil Cleanup Objectives
SCG	Standards, Criteria and Guidance
SMP	Site Management Plan
SPDES	State Pollutant Discharge Elimination System
SVOC	Semi-Volatile Organic Compound
USGS	United States Geological Survey
UST	Underground Storage Tank
VOC	Volatile Organic Compound

CERTIFICATION

I, Brandon Nathe, am a Professional Engineer licensed in the State of New York. I have primary direct responsibility for implementation of the remedial action for the 1243-1275 Woodrow Road Site (Site No. 12RH-A148R).

I certify that this Remedial Action Work Plan (RAWP) has a plan for handling, transport and disposal of soil, fill, fluids and other materials removed from the property in accordance with applicable City, State and Federal laws and regulations. Importation of all soil, fill and other material from off-Site will be in accordance with all applicable City, State and Federal laws and requirements. This RAWP has provisions to control nuisances during the remediation and all invasive work, including dust and odor suppression.

Brandon Nathe

Name

087851

NYS PE License Number

Signature

March 20, 2013

Date

EXECUTIVE SUMMARY

Woodrow Plaza LLC has enrolled in the New York City Voluntary Cleanup Program (NYC VCP) to investigate and remediate a 79,626-square foot site located at 1243-1275 Woodrow Road in Staten Island, New York. A remedial investigation (RI) was performed to compile and evaluate data and information necessary to develop this Remedial Action Work Plan (RAWP).The remedial action described in this document provides for the protection of public health and the environment consistent with the intended property use, complies with applicable environmental standards, criteria and guidance, and conforms with applicable laws and regulations.

Site Location and Current Usage

The Site is located at 1243-1275 Woodrow Road in the Rossville neighborhood section in the borough of Staten Island, New York and is identified as Block 6145 and Lots 13 & 16 on the New York City Tax Map. Figure 1 shows the Site location. The Site is 79,626-square feet and is bounded by a retail shopping center to the north, Woodrow Road to the south, Alverson Avenue to the east, and Rossville Avenue to the west. A map including the site boundary is shown in Figure 2. Currently, the Site is a vacant wooded lot, with dense understory vegetation and numerous mature trees. Remnants of a former building slab were observed on the north side of the property.

Summary of Proposed Redevelopment Plan

The proposed future use of the Site will consist of two 2-story commercial and retail buildings with parking below grade and at grade. Layout of the proposed site development is presented in Figure number 2. The complete development plans are included in Appendix 1. The current zoning designation is R3X residential with a C2-2 overlay (commercial). The proposed use is consistent with existing zoning for the property.

The proposed use of the vacant property is to construct two,2-story commercial use (office and retail) buildings on the Site. Parking for vehicles would be beneath both buildings and in spaces provided on site. Excavation and grading on site would be completed to construct the subgrade parking area and to level the Site for construction purposes. Excavation depths would

range from a minimum of approximately one foot on the western portion of the Site and generally increasing to a maximum of approximately 11.5-feet on the eastern portion of the Site (see Figure 3).The total volume of excavated soil is estimated to be approximately 7,600 cubic yards; however, approximately 700 cubic yards of this material is to be re-used on the Site for grading. Onsite fill would be used to grade and level areas of the site and to construct additional parking spaces. Groundwater was encountered at elevation +/- 60 feet above mean sea level (MSL). The maximum proposed cut in elevation would be to 102 feet MSL or 40+ feet above the existing groundwater table.

Summary of the Remedy

The proposed remedial action achieves protection of public health and the environment for the intended use of the property. The proposed remedial action achieves all of the remedial action objectives established for the project and addresses applicable standards, criterion, and guidance; is effective in both the short-term and long-term and reduces mobility, toxicity and volume of contaminants; is cost effective and implementable; and uses standards methods that are well established in the industry.

The proposed remedial action will consist of:

1. Preparation of a Community Protection Statement and Performance of all required NYC VCP Citizen Participation activities according to an approved Citizen Participation Plan.
2. Perform a Community Air Monitoring Program.
3. Establishment of Track 4 Site Specific Soil Cleanup Objectives (SCOs).
4. Site mobilization involving Site security setup, equipment mobilization, utility mark outs and marking & staking excavation areas.
5. Excavation and removal of soil/fill exceeding Track 4 Site-Specific SCOs, including excavation of soil/fill to a depth ranging from 1 foot to 11.5 feet below grade.
6. Screening of excavated soil/fill during intrusive work for indications of contamination by visual means, odor, and monitoring with a PID.

7. Removal of underground storage tanks (if encountered) and closure of petroleum spills (if evidence of a spill/leak is encountered during Site excavation) in compliance with applicable local, State and Federal laws and regulations.

8. Transportation and off-Site disposal of all soil/fill material at permitted facilities in accordance with applicable laws and regulations for handling, transport, and disposal, and this plan. Sampling and analysis of excavated media as required by disposal facilities.

9. Onsite reuse of a portion of soil/fill material excavated in accordance with this plan.

10. Collection and analysis of end-point samples to determine the performance of the remedy with respect to attainment of SCOs.

11. Construction and maintenance of an engineered composite cover consisting of a concrete slab and asphalt covered areas, to prevent human exposure to residual soil/fill remaining under the Site.

12. As part of development, construction of ventilate parking areas beneath the commercial structures.

13. Implementation of storm-water pollution prevention measures in compliance with applicable laws and regulations.

14. Performance of all activities required for the remedial action, including permitting requirements and pretreatment requirements, in compliance with applicable laws and regulations.

15. Submission of a RAR that describes the remedial activities, certifies that the remedial requirements have been achieved, defines the Site boundaries, and describes all Engineering and Institutional Controls to be implemented at the Site, and lists any changes from this RAWP.

16. Continued registration of the property with an E-Designation; establishment of Engineering Controls and Institutional Controls in this RAWP including prohibition of: (1) vegetable gardening and farming; (2) use of groundwater without treatment rendering it safe for the intended use; (3) disturbance of residual contaminated material unless it is

conducted in accordance with the SMP; and (4) higher level of land usage without OER-approval.

COMMUNITY PROTECTION STATEMENT

The Office of Environmental Remediation created the New York City Voluntary Cleanup Program (NYC VCP) to provide governmental oversight for the cleanup of contaminated property in NYC. This Remedial Action Work Plan ("cleanup plan") describes the findings of prior environmental studies and describes the plans to protect public health and the environment.

This plan provides a very high level of protection for neighboring communities. This cleanup plan also includes many other elements that address common community concerns, such as community air monitoring, dust and noise controls, hours of operation, good housekeeping and cleanliness, truck management and routing, and opportunities for community participation. The purpose of this Community Protection Statement is to explain these community protection measures in non-technical language to simplify community review.

Remedial Investigation and Cleanup Plan. Under the NYC VCP, a thorough cleanup study of this property (called a remedial investigation) has been performed to identify past property usage, to sample and test soil, groundwater and soil vapor, and identify contaminant sources present on the property. Thisplan has been designed to addressthe findings identified during the study of the property.

Identification of Sensitive Land Uses. Prior to selecting a plan, the neighborhood was evaluated to identify sensitive land uses nearby, such as schools, day care facilities, hospitals and residential areas. The program was then tailored to address the special conditions of this community.

Qualitative Human Health Exposure Assessment. An important part of the cleanup planning for the Site is the performance of a study to find all of the ways that people might come in contact with contaminants at the Site now or in the future. This study is called a Qualitative Human Health Exposure Assessment (QHHEA). A QHHEA was performed for this project. This assessment has considered the remedial investigation findings at the Site. All identified public exposures will be addressed under this cleanup plan.

Health and Safety Plan. This plan includes a Health and Safety Plan that is designed to protect community residents and on-Site workers. The elements of this plan are in compliance

with safety requirements of the United States Occupational Safety and Health Administration. This plan includes many protective elements including those discussed below.

Site Safety Coordinator. This project has a designated Site safety coordinator to implement the Health and Safety Plan. The safety coordinator maintains an emergency contact sheet and protocol for management of emergencies. The Site safety coordinator is Otto Savo and he can be reached at 347-242-6127.

Worker Training. Workers participating in cleanup of contaminated material on this project are required to be trained in a 40-hour hazardous waste operators training course and to take annual refresher training. This pertains to workers performing specific tasks including removing contaminated material and installing cleanup systems in contaminated areas.

Community Air Monitoring Plan. Community air monitoring will be performed during this cleanup project to ensure that the community is properly protected from dust. Air samples will be tested in accordance with a detailed plan called the Community Air Monitoring Plan or CAMP. Results will be regularly reported to the NYC Office of Environmental Remediation. This plan also has a plan to address any unforeseen problems that might occur during the implementation of the plan (called a 'Contingency Plan').

Dust and Noise Control. This plan includes actions dust control. These actions are designed to prevent off-Site dust nuisances and include steps to be taken if nuisances are detected. Generally, dust is managed by application of physical covers and by water sprays. The project is also required to comply with NYC noise control standards. If you observe problems in these areas, please contact the onsite Project Manager Otto Savo 347-242-6127 or NYC Office of Environmental Remediation Project Manager William Wong at (212) 341-0659.

Quality Assurance. This plan requires that evidence be provided to illustrate that all cleanup work required under the plan has been completed properly. This evidence will be summarized in the final report, called the Remedial Action Report. This report will be submitted to the NYC Office of Environmental Remediation and will be thoroughly reviewed.

Storm-Water Management. To limit the potential for soil erosion and discharge, this plan has provisions for storm-water management. The main elements of the storm water management

include physical barriers such as tarp covers and erosion fencing, and a program for frequent inspection.

Hours of Operation. The hours for operation will comply with the NYC Department of Buildings construction code requirements or according to specific variances issued by that agency. For this cleanup project, the hours of operation are Monday through Friday, 7:00PM to 5:00PM.

Signage. While the work is in progress, a placard will be prominently posted at the main entrance of the property with a laminated project Fact Sheet that states that the project is in the NYC Voluntary Cleanup Program, provides project contact names and numbers, and locations of where project documents can be viewed.

Complaint Management. The contractor performing this cleanup is required to address all complaints. If you have any complaints, you can call the facility Project Manager Otto Savo at 347-242-6127, the NYC Office of Environmental Remediation Project Manager William Wong at (212) 341-0659 or call 311 and mention the Site is in the NYC Voluntary Cleanup Program.

Utility Mark-outs. To promote safety during excavation in this project, the contractor is required to first identify all utilities and must perform all excavation and construction work in compliance with NYC Department of Buildings regulations.

Soil and Liquid Disposal. All soil and liquid material removed from the Site as part of the project will be transported and disposed of in accordance with all applicable City, State and Federal regulations, and required permits will be obtained.

Soil Chemical Testing and Screening. All excavations will be supervised by a trained and properly qualified environmental professional.

Stockpile Management. Stockpiling of soil at the Site is not anticipated to be necessary. Any soil stockpiles will be kept covered with tarps to prevent dust and erosion. Stockpiles will be frequently inspected. Damaged tarp covers will be promptly replaced. Stockpiles will be protected with silt fences. Hay bales will be used, as needed to protect storm water catch basins and other discharge points.

Trucks and Covers. Loaded trucks leaving the Site will be covered in compliance with applicable laws and regulations to prevent dust. Trucks will be properly recorded in logs and records and placarded in compliance with applicable City, State and Federal laws, including those of the New York State Department of Transportation. If loads contain wet material that can leak, truck liners will be used. All transport of materials will be performed by licensed truckers and in compliance with all laws and regulations.

Imported Material. All fill materials proposed to be brought onto the Site will comply with rules outlined in this plan and will be inspected and approved by a qualified worker located on-Site. Waste materials will not be brought onto the Site. Trucks entering the Site with imported clean materials will be covered in compliance with applicable laws and regulations.

Equipment Decontamination. All equipment used for the project work will be inspected and washed, if needed, before it leaves the Site. Trucks will be cleaned at a truck inspection station on the property before leaving the Site.

Housekeeping. Locations where trucks enter or leave the Site will be inspected every day and cleaned regularly to ensure that they are free of dirt and other materials from the Site.

Truck Routing. Truck routes have been selected to: (a) limit transport through residential areas and past sensitive nearby properties; (b) maximize use of city-mapped truck routes; (c) limit total distance to major highways; (d) promote safety in entry to highways; (e) promote overall safety in trucking; and (f) minimize off-Site line-ups (queuing) of trucks entering the property. Operators of loaded trucks leaving the Site will be instructed not to stop or idle in the local neighborhood.

Final Report. The results of all work will be fully documented in a final report (called a Remedial Action Report) that will be available for you to review in the public document repositories located at New York Public Library – Huguenot Park Library 830 Huguenot Avenue, Staten Island, NY 10312.

Long-Term Site Management. To provide long-term protection after the cleanup is complete, the property owner will be required to comply with an ongoing Site Management Plan that calls for continued inspection of protective controls, such as Site covers. The Site Management Plan is evaluated and approved by the NYC Office of Environmental Remediation.

Requirements that the property owner must comply with are defined in the property's deed. A certification of continued protectiveness of the cleanup will be required from time to time to show that the approved cleanup is still effective.

REMEDIAL ACTION WORK PLAN

1.0 SITE BACKGROUND

Woodrow Plaza LLC has enrolled in the New York City Voluntary Cleanup Program (NYC VCP) to investigate and remediate a property located at 1243-1275 Woodrow Road in the Rossville section of Staten Island, New York (the Site). A Remedial Investigation (RI) was performed to compile and evaluate data and information necessary to develop this Remedial Action Work Plan (RAWP) in a manner that will render the Site protective of public health and the environment consistent with the contemplated end use.This RAWP establishes remedial action objectives, provides a remedial alternatives analysis that includes consideration of a permanent cleanup, and provides a description of the selected remedial action. The remedial action described in this document provides for the protection of public health and the environment, complies with applicable environmental standards, criteria and guidance, and applicable laws and regulations.

1.1 SITE LOCATION AND CURRENT USAGE

The Site is located at 1243-1275 Woodrow Road in the Rossville neighborhood section in the borough of Staten Island, New York and is identified as Block 6145 and Lots 13 & 16 on the New York City Tax Map. Figure 1 shows the Site location. The Site is 79,626-square feet and is bounded by a retail shopping center to the north, Woodrow Road to the south, Alverson Avenue to the east, and Rossville Avenue to the west. A map showing the site boundary is shown in Figure 2. Currently, the Site is a vacant wooded lot, with dense understory vegetation and numerous mature trees. Remnants of a former building slab were observed on the north side of the property.

1.2 PROPOSED REDEVELOPMENT PLAN

The proposed future use of the Site will consist of two 2-story commercial and retail buildings with parking below grade and at grade. Layout of the proposed site development is presented in Figure number 2, and the complete development plans are included in Appendix 1.

The current zoning designation is R3X residential with a C2-2 overlay (commercial). The proposed use is consistent with existing zoning for the property.

The proposed use of the vacant property is to construct two, 2-story commercial use (office and retail) buildings on the Site. Parking for vehicles would be beneath both buildings and in spaces provided on site. Excavation and grading on site would be completed to construct the subgrade parking area and to level the Site for construction purposes. Excavation depths would range from a minimum of approximately 1 foot on the western portion of the Site and generally increasing to a maximum of approximately 11.5 feet on the eastern portion of the Site (see Figure 3). The total volume of excavated soil is estimated to be approximately 7,600 cubic yards; however, approximately 700 cubic yards of this material is to be re-used on the Site for grading. Onsite fill would be used to grade and level areas of the site and to construct additional parking spaces. Groundwater was encountered at elevation +/- 60 feet above MSL. The maximum proposed cut in elevation would be to 102 feet MSL or 50+ feet above the existing groundwater table.

The remedial action contemplated under this RAWP may be implemented independently of the proposed redevelopment plan.

1.3 DESCRIPTION OF SURROUNDING PROPERTY

Surrounding uses of adjacent properties include:

North – Woodrow Shopping Center with two 1-story multi-tenant retail buildings.

South – Woodrow Road with single and duplex family homes.

East – Alverson Avenue with single and duplex family homes.

West – Rossville Avenue with single and duplex family homes.

The closest school is Public School PS 56, 0.34 miles to the west. The closest daycare is the Woodrow Preschool Center, 0.37 miles to the east, and the closest hospital is the Staten Island University Hospital, 1.83 miles southeast of the site.

1.4 REMEDIAL INVESTIGATION

A remedial investigation was performed and the results are documented in a companion document called "*Remedial Investigation Report, 1243-1275 Woodrow Road*", dated May, 2012 (RIR).

A Phase I Environmental Site Assessment was completed by Environmental Projects Data StatementsCompany (EPDS) in January 2008. The EPDS Phase I historical research identified that a portion of this site at 1275 Woodrow Road was used by a florist during the 1920s and 1930s and then was a residential dwelling. A portion of the property at 1243 Woodrow Road contained a residential dwelling from the 1960s to at least 1996. No additional uses of the properties were identified in the Phase I report. There were no Areas of Concern identified in the Phase I report.

These reports are provided in Appendix 2.

Summary of the Work Performed under the Remedial Investigation

1. EEA, Inc.conducted a Site inspection to identify AOCs and physical obstructions (i.e. structures, buildings, etc.);
2. Installed six soil borings across the entire project Site, and collected 12 soil samples plus QA/QC samples for chemical analysis from the soil borings to evaluate soil quality;
3. Installed three groundwater monitoring wells throughout the Site to establish groundwater flow and collected three groundwater samples plus QA/QC samples for chemical analysis to evaluate groundwater quality;
4. Installed four soil vapor probes around Site perimeter and collected four soil vapor samples plus one ambient air sample for chemical analysis.

Summary of Environmental Findings

1. Elevation of the property ranges from 104 feet to 122 feet above sea level.
2. Elevation of groundwater is approximately 60 feet above sea level.
3. Groundwater flow is generally presumed to flow from east to west beneath the Site.
4. Depth to bedrock was not determined and was not encountered at the Site.

5. The stratigraphy of the site, from the surface down, consists of 80 feet of glacially deposited silts and sands.

6. Soil/fill samples collected during the RI detected no volatile organic compounds (VOCs) and PCBs in any of the soil samples analyzed. Low levels of pesticides in shallow soils (0-2 feet) were detected and included DDE (maximum concentration of 11 ppb) and DDT (maximum concentration of 4.8 ppb). The Unrestricted Use Soil Cleanup Objective (SCO) for DDE and DDT is 3.3 ppb. Numerous Semi Volatile Organic Compounds (SVOCs) were observed in low concentrations in the shallowsoils. None of the soil samples exceeded the Unrestricted Use SCOs. The shallow distribution of the SVOC compounds is typical of urban fill. No SVOC compounds were observed in the deeper samples collected.All detected metals were below the unrestricted use SCOs except for copper (140 ppm) at 0-2 feet and Selenium (at 6.7 ppm) at 12-14 feet. The unrestricted use SCO for selenium is 3.9 ppm.The RI did not reveal any contaminant source areas on the property.

7. Groundwater samples collected during the RI indicated that pesticides and PCBs were not detected in groundwater. One volatile organic compound, chloroform was detected in all samples above Groundwater Quality Standards (GQS) at a maximum concentration of 12 ppb (GQS is 7 ppb). One semi volatile organic compound, Bis(2-ethylhexyl)phthalate was observed at 4 ppb. Unfiltered metals included iron, manganese, and sodium. Dissolved metals above GQS included manganese and sodium. Groundwater is not used as a drinking water resource on Staten Island. Drinking water is delivered through the City of New York water supply systems from upstate reservoirs and the metals observed in the groundwater is not anticipated to hinder the development of this site.

8. Soil vapor samples collected during the RI showed low concentrations of acetone (737 $\mu g/m^3$), benzene (4.4$\mu g/m^3$), carbon disulfide (21.4$\mu g/m^3$), cyclohexane (3.7$\mu g/m^3$), hexane (12.71$\mu g/m^3$), toluene (32$\mu g/m^3$), and triclorofluoromethane (61$\mu g/m^3$). None of these compounds were observed in concentrations governed under the NYSDOH Soil Vapor Guidance. No VOCs were detected in the outdoor ambient air sample.

For more detailed results, consult the RIR. Based on an evaluation of the data and information from the RIR and this RAWP, disposal of significant amounts of hazardous waste is not suspected at this site.

2.0 REMEDIAL ACTION OBJECTIVES

Based on the results of the RI, the following Remedial Action Objectives (RAOs) have been identified for this Site:

Soil

- Prevent direct contact with contaminated soil.
- Prevent migration of dust resulting from construction activities.

Soil Vapor

- Prevent migration of soil vapor into dwelling and other occupied structures.

3.0 REMEDIAL ALTERNATIVES ANALYSIS

The goal of the remedy selection process is to select a remedy that is protective of human health and the environment taking into consideration the current, intended and reasonably anticipated future use of the property. The remedy selection process begins by establishing RAOs for media in which chemical constituents were found in exceedance of applicable standards, criteria and guidance values (SCGs). A remedy is then developed based on the following ten criteria:

- Protection of human health and the environment;
- Compliance with SCGs;
- Short-term effectiveness and impacts;
- Long-term effectiveness and permanence;
- Reduction of toxicity, mobility, or volume of contaminated material;
- Implementability;
- Cost effectiveness;
- Community acceptance;
- Land use; and
- Sustainability.

The following is a detailed description of the alternatives analysis and remedy selection to address impacted media at the Site. As required, a minimum of two remedial alternatives (including a Track 1 scenario) are evaluated, as follows:

Alternative 1 involves:

- Establishment of Track 1 Unrestricted Use SCOs throughout the Site and confirmation that Track 1 Unrestricted Use SCOs have been achieved with post-excavation endpoint sampling.
- Removal of all soil/fill exceeding Track 1 Unrestricted Use SCOs throughout the Site and confirmation that Track 1 Unrestricted Use SCOs have been achieved with post-excavation endpoint sampling. Based on the results of the remedial investigation, it is expected that this alternative would require excavation to a depth of 2 feet across the

entire property to remove all lightly contaminated fill at the Site. If soil/fill containing analytes at concentrations above Track 1 Unrestricted Use SCOs are still present at the base of the excavation after removal of soil is complete, additional excavation would be performed to ensure complete removal of soil that does not meet Track 1 Unrestricted Use SCOs.

Alternative 2 involves:

- Removal of all soil/ fill exceeding Track 4 Site-Specific SCOs and confirmation that Track 4 has been achieved with post-excavation endpoint sampling. Excavation for development purposes would take place to a depth of approximately 1 foot on the western portion and approximately 11.5 feet on southern portion of the property. If soil/fill containing pesticides or metals at concentrations above Track 4 Site-Specific SCOs are still present at the base of the excavation after removal of all soil required for construction is complete, additional excavation would be performed to ensure complete removal of soil that does not meet Track 4 Site-Specific SCOs.
- Placement of a final cover consisting of building slab and paved parking over the entire Site to prevent exposure to remaining soil/fill;
- Establishment of use restrictions including prohibitionson the use of groundwater from the Site; prohibitions of sensitive Site uses, such as farming or vegetable gardening, to prevent future exposure pathways; and prohibition of a higher level of land use without OER approval;
- Establishment of an approved Site Management Plan to ensure long-term management of these engineering and institutional controls including the performance of periodic inspections and certification that the controls are performing as they were intended; and
- Continued registration as an E-designated property to memorialize the remedial action and the Engineering and Institutional Controls required by this RAWP.
- As required by NYC building code, a venting system will be installed within the underground parking area.

3.1 THRESHOLD CRITERIA

Protection of Public Health and the Environment

This criterion is an evaluation of the remedy's ability to protect public health and the environment, and an assessment of how risks posed through each existing or potential pathway of exposure are eliminated, reduced or controlled through removal, treatment, and implementation of Engineering Controls or Institutional Controls. Protection of public health and the environment must be achieved for all approved remedial actions.

Alternatives 1and 2 would be protective of human health and the environment by addressing the limited soil impacts. Groundwater is not impacted by the property and there is no potential for contact with groundwater, since it is up to 70 feet deep and is not anticipated to be encountered during construction/remedial action. There were no soil vapor impacts identified. Operation of a ventilated parking garage at the base of the development will mitigate any potential future soil vapor impacts from offsite. Potential exposure to contaminated soils during construction would be minimized by implementing a Construction Health and Safety Plan, an approved Soil/Materials Management Plan, and Community Air Monitoring Plan (CAMP).

3.2. BALANCING CRITERIA

Compliance with Standards, Criteria and Guidance (SCGs)

Alternatives 1 and 2 will achieve compliance with the remedial goals, SCGs and RAOs for soil through establishment of Track 1 Unrestricted Use SCOs and Track 4 SCOs, respectively. There are no groundwater and soil vapor impacts at this site. Operation of a ventilated parking garage at the base of the development will mitigate any potential future soil vapor impacts from offsite. Focused attention on means and methods employed during the remedial action would ensure that handling and management of contaminated material would be in compliance with applicable SCGs.

Short-term Effectiveness and Impacts

This evaluation criterion assesses the effects of the alternative during the construction and implementation phase until remedial action objectives are met. Under this criterion, alternatives

are evaluated with respect to their effects on public health and the environment during implementation of the remedial action, including protection of the community, environmental impacts, time until remedial response objectives are achieved, and protection of workers during remedial actions.

Both alternatives have similar-short term effectiveness during their respective implementations, as each requires excavation of at last 7000 cubic yards of soil for development purposes. Both alternatives would employ appropriate measures to prevent short term impacts, including a Construction Health and Safety Plan, a Community Air Monitoring Plan (CAMP) and a Soil/Materials Management Plan (SMMP), during all on-Site soil disturbance activities and would minimize the release of contaminants into the environment. As mentioned above, limited soil impacts have been identified, with few compounds identified above the Unrestricted Use SCOs, but below the Commercial Use SCOs.

Long-term Effectiveness and Permanence

This evaluation criterion addresses the results of a remedial action in terms of its permanence and quantity/nature of waste or residual contamination remaining at the Site after response objectives have been met, such as permanence of the remedial alternative, magnitude of remaining contamination, adequacy of controls including the adequacy and suitability of ECs/ICs that may be used to manage contaminant residuals that remain at the Site and assessment of containment systems and ICs that are designed to eliminate exposures to contaminants, and long-term reliability of Engineering Controls.

Alternative 1 would achieve long-term effectiveness and permanence related to on-Site contamination by permanently removing all impacted soil/fill.

Alternative 2 would provide long-term effectiveness and permanence for the intended use of the Site by attainment of Track 4 SCOs. There are no groundwater and soil vapor impacts at this site and operation of a ventilated parking garage at the base of the development will mitigate any potential future soil vapor impacts from offsite.

Reduction of Toxicity, Mobility, or Volume of Contaminated Material

This evaluation criterion assesses the remedial alternative's use of remedial technologies that permanently and significantly reduce toxicity, mobility, or volume of contaminants as their

principal element. The following is the hierarchy of source removal and control measures that are to be used to remediate a site, ranked from most preferable to least preferable: removal and/or treatment, containment, elimination of exposure, and treatment of source at the point of exposure. It is preferred to use treatment or removal to eliminate contaminants at a site, reduce the total mass of toxic contaminants, cause irreversible reduction in contaminants mobility, or reduce of total volume of contaminated media.

Alternative 1 will permanently eliminate the toxicity, mobility, and volume of contaminants from on-Site soil by meeting Track 1 Unrestricted Use SCOs.

Due to the extensive planned excavation and limited nature of the impacts present in on-Site soils and the intended use of the Site, Alternative 2 would remove most contaminant mass currently present on the property and would effectively eliminate any associated mobility. Track 2 Commercial SCOs are already attained by onsite soil and groundwater is not impacted by the property so there is no toxicity threat or mobility threat at this property.

Implementability

This evaluation criterion addresses the technical and administrative feasibility of implementing an alternative and the availability of various services and materials required during its implementation, including technical feasibility of construction and operation, reliability of the selected technology, ease of undertaking remedial action, monitoring considerations, administrative feasibility (e.g. obtaining permits for remedial activities), and availability of services and materials.

The techniques, materials and equipment to implement Alternatives 1 and 2 are readily available and have been proven effective in remediating the contaminants associated with the Site. They utilize standard materials and services that are commonly available and routinely applied by the industry. The reliability of both remedies is high. There are no special difficulties associated with any of the activities proposed.

Cost Effectiveness

This evaluation criterion addresses the cost of alternatives, including capital costs (such as construction costs, equipment costs, and disposal costs, engineering expenses) and site

management costs (costs incurred after remedial construction is complete) necessary to ensure the continued effectiveness of a remedial action.

The anticipated development excavation is expected to largely achieve Track 1 SCOs on this property and the costs for attainment of Track 1 and Track 4 SCOs are believed to be comparable. Alternative 2 could require higher costs due to excavation to achieve Track 1 SCOs, if end point samples indicated these goals were not achieved, and long term site management costs.

Community Acceptance

This evaluation criterion addresses community opinion and support for the remedial action. Observations here will be supplemented by public comment received on the RAWP.

Based on the overall goals of the remedial program and the intended Site use, it is anticipated that both Alternatives 1 and 2 for the Site would be acceptable to the community. This RAWP will be subject to and undergo public review under the NYC VCP and will provide the opportunity for detailed public input on the remedial alternatives and the selected remedial action. This public comment will be considered by OER prior to approval of this plan.

Land Use

This evaluation criterion addresses the proposed use of the property. This evaluation has considered reasonably anticipated future uses of the Site and takes into account: current use and historical and/or recent development patterns; applicable zoning laws and maps; NYS Department of State's Brownfield Opportunity Areas (BOA) pursuant to section 970-r of the general municipal law; applicable land use plans; proximity to real property currently used for residential use, and to commercial, industrial, agricultural, and/or recreational areas; environmental justice impacts, Federal or State land use designations; population growth patterns and projections; accessibility to existing infrastructure; proximity of the site to important cultural resources and natural resources, potential vulnerability of groundwater to contamination that might emanate from the site, proximity to flood plains, geography and geology; and current Institutional Controls applicable to the site.

The proposed redevelopment of the Site is compatible with the existing zoning for the property. Both alternatives provide comprehensive protection of public health and the environment for reasonably foreseeable uses of the Site, which include commercial uses.

Sustainability of the Remedial Action

This criterion evaluates the overall sustainability of the remedial action alternatives and the degree to which sustainable means are employed to implement the remedial action including those that take into consideration NYC's sustainability goals defined in *PlaNYC: A Greener, Greater New York*. Sustainability goals may include: maximizing the recycling and reuse of non-virgin materials; reducing the consumption of virgin and non-renewable resources;

minimizing energy consumption and greenhouse gas emissions; improving energy efficiency; and promotion of the use of native vegetation and enhancing biodiversity during landscaping associated with Site development.

While Alternative 2 would potentially result in lower energy usage based on reducing the volume of material transported off-Site, both remedial alternatives are comparable with respect to the opportunity to achieve sustainable remedial action.

4.0 REMEDIAL ACTION

4.1 SUMMARY OF PREFERRED REMEDIAL ACTION

The preferred remedial action alternative is the Alternative 2. The preferred remedial action alternative achieves protection of public health and the environment for the intended use of the property. The preferred remedial action alternative will achieve all of the remedial action objectives established for the project and addresses applicable SCGs. The preferred remedial action alternative is effective in both the short-term and long-term and reduces mobility, toxicity and volume of contaminants. The preferred remedial action alternative is cost effective and implementable and uses standards methods that are well established in the industry.

The proposed remedial action will consist of:

1. Preparation of a Community Protection Statement and Performance of all required NYC VCP Citizen Participation activities according to an approved Citizen Participation Plan.
2. Perform a Community Air Monitoring Program for particulates.
3. Establishment of Track 4 Site Specific Soil Cleanup Objectives (SCOs).
4. Site mobilization involving Site security setup, equipment mobilization, utility mark outs and marking & staking excavation areas.
5. Excavation and removal of soil/fill exceeding Track 4 Site-Specific SCOs, including excavation of soil/fill to a depth ranging from 1 foot to 11.5 feet below grade.
6. Screening of excavated soil/fill during intrusive work for indications of contamination by visual means, odor, and monitoring with a PID.
7. Removal of underground storage tanks (if encountered) and closure of petroleum spills (if evidence of a spill/leak is encountered during Site excavation) in compliance with applicable local, State and Federal laws and regulations.
8. Transportation and off-Site disposal of all soil/fill material at permitted facilities in accordance with applicable laws and regulations for handling, transport, and disposal, and this plan. Sampling and analysis of excavated media as required by disposal facilities.
9. Onsite reuse of a portion of soil/fill material excavated in accordance with this plan.

10. Collection and analysis of end-point samples to determine the performance of the remedy with respect to attainment of SCOs.
11. Construction and maintenance of an engineered composite cover consisting of a concrete slab and asphalt covered areas, to prevent human exposure to residual soil/fill remaining under the Site.
12. As part of development, construction of ventilate parking areas beneath the commercial structures.
13. Implementation of storm-water pollution prevention measures in compliance with applicable laws and regulations.
14. Performance of all activities required for the remedial action, including permitting requirements and pretreatment requirements, in compliance with applicable laws and regulations.
15. Submission of a RAR that describethe remedial activities, certifies that the remedial requirements have been achieved, defines the Site boundaries, and describes all Engineering and Institutional Controls to be implemented at the Site, and lists any changes from this RAWP.
16. Continued registration of the property with an E-Designation; establishment of Engineering Controls and Institutional Controls in this RAWP; a requirement that management of these controls must be in compliance; and Institutional Controls including prohibition of the following: (1) vegetable gardening and farming; (2) use of groundwater without treatment rendering it safe for the intended use; (3) disturbance of residual contaminated material unless it is conducted in accordance with the SMP; and (4) higher level of land usage without OER-approval.

4.2 SOIL CLEANUP OBJECTIVES AND SOIL/FILL MANAGEMENT

Track 4S ite-Specific Soil Cleanup Objectives (SCOs) are proposed for this project. The following Track 4 Site-Specific SCOs will be used:

Contaminant	Track 4 SCOs
Total SVOCs	250 ppm
Copper	270 ppm (Part 375-6.8 Restricted Commercial SCOs)
Selenium	1500 ppm (Part 375-6.8 Restricted Commercial SCOs)

Soil and materials management on-Site and off-Site, including excavation, handling and disposal, will be conducted in accordance with the Soil/Materials Management Plan in Appendix 3. The location of planned excavations is shown in Appendix 1.

Estimated Soil/Fill Removal Quantities

The total quantity of soil/fill expected to be excavated and disposed and/or reused off-Siteis approximately 7,600 cubic yards or 10,400 tons.

End-Point Sampling

Removal actions under this plan will be performed in conjunction with remedial end-point sampling. The RI provided field data that substantively achieved Track 2 – Restricted Commercial SCOs at the property. However, two post-excavation end-point samples will be collected and tested following soil removal and prior to Site development activities to evaluate attainment of Track 4 Site-Specific SCOs.

Import and Reuse of Soils

There will be no import of soils on the property. Reuse of soil on the property will be used to grade and level areas of the site and to construct parking areas.

4.3 ENGINEERING CONTROLS

Engineering Controls were employed in the remedial action to address residual contamination remaining at the Site. The Site has one primary Engineering Control Systems: composite cover system. As part of development, the building design includes a full underground ventilated parking garage under all areas of the commercial building structure.

Composite Cover System

Exposure to any residual soil/fill contamination will be prevented by an engineered, composite cover system to be built on the Site. This composite cover system is comprised of:

- asphalt covered roads;

- concrete covered walkways;
- concrete building slabs.

The various remedial cover type used on this Siteis shown in the development plans (Appendix 1)

The composite cover system is a permanent engineering control for the Site. Due to the limited nature of contaminants that would be left onsite (within the Track 2 SCOs), periodic inspection of the composite cover system will not be required.

4.4 INSTITUTIONAL CONTROLS

Institutional Controls (IC) have been incorporated in this remedial action to manage residual soil/fill and other media and render the Site protective of public health and the environment. Institutional Controls are listed below. The property will continue to be registered with an E-Designation by the NYC Buildings Department.

Institutional Controls for this remedial action are:

- The property will continue to be registered with an E-Designation. This RAWP includes a description of all ECs and ICs;
- Vegetable gardens and farming on the Site are prohibited;
- Use of groundwater underlying the Site is prohibited without treatment rendering it safe for its intended use;
- The Site will be used for commercial use and will not be used for a higher level of use without prior approval by OER.

4.5 QUALITATIVE HUMAN HEALTH EXPOSURE ASSESSMENT

Investigations reported in the Remedial Investigation Report (RIR) are sufficient to complete a Qualitative Human Health Exposure Assessment (QHHEA).

The objective of the qualitative exposure assessment is to identify potential receptors to the contaminants of concern (COC) that are present at, or migrating from, the Site. The identification of exposure pathways describes the route that the COC takes to travel from the source to the receptor. An identified pathway indicates that the potential for exposure exists; it does not imply that exposures actually occur.

Investigations reported in the Remedial Investigation Report (RIR) are sufficient to complete a Qualitative Human Health Exposure Assessment (QHHEA). As part of the VCP process, a QHHEA was performed to determine whether the Site poses an existing or future health hazard to the Site's exposed or potentially exposed population. The sampling data from the RI were evaluated to determine whether there is any health risk by characterizing the exposure setting, identifying exposure pathways, and evaluating contaminant fate and transport. This EA was prepared in accordance with Appendix 3B and Section 3.3 (b) 8 of the NYSDEC Draft DER-10 Technical Guidance for Site Investigation and Remediation.

Known and Potential Sources

Based on the results of the Remedial Investigation Report, the contaminants of concern found are:

<u>Soil</u>

- No parameters exceeded Track 2 Commercial SCOs.

<u>Groundwater</u>

- Metals sodium and manganese exceeding GQSs from regional sources.

<u>Soil vapor</u>

- Chlorinated and petroleum related VOCs detected at low concentrations and below NYS DOH monitoring thresholds.

Nature, Extent, Fate and Transport of Contaminants

Very low levels of pesticides, SVOCs and metals are present in soil at the site. Groundwater is up to 75 feet deep and the property does not cause violation of groundwater quality standards. Low level soil vapor concentrations do not have an onsite source and are attributed to offsite sources.

Receptor Populations

On-Site Receptors – The Site is currently vacant. Therefore, the only potential on-Site receptors are Site Representatives and trespassers. During redevelopment of the Site, the on-Site potential receptors will include construction workers, site representatives, and visitors. Once the Site is redeveloped, the on-Site potential sensitive receptors will include adult and child building residents and visitors.

Off-Site Receptors– Potential off-Site receptors within a 0.25-mile radius of the Site include: adult and child residents, and commercial and construction workers, pedestrians, trespassers, and cyclists, based on the following:

1. Commercial Businesses (up to 0.25 mile) – existing and future
2. Residential Buildings (up to 0.25 mile) – existing and future
3. Building Construction/Renovation (up to 0.25 mile) – existing and future
4. Pedestrians, Trespassers, Cyclists (up to .25 mile) – existing and future
5. Schools (up to .25 mile) – existing and future

Potential Points of Exposure

Existing

Exposure to fill is unlikely since currently, the Site is a vacant wooded lot, with dense understory vegetation and numerous mature trees. Groundwater is not accessible at the Site, and contaminants in groundwater are limited to ions common in salt water. Groundwater is not used for potable supply.

Construction/ Remediation Activities

Once redevelopment activities begin, construction workers will come into direct contact with surface and subsurface soils as a result of on-Site construction and excavation activities. On-Site

construction workers potentially could ingest, inhale or have dermal contact with soil. Similarly, off-Site receptors could be exposed to dust from on-Site activities.

Proposed Future Conditions

Once the remedial actions and redevelopment of the Site has been completed, there will be no potential on-Site or off-Site exposure pathways. Not only will soil/fill exceeding Track 4 - Site-Specific SCOs be removed, but the Site will also be fully capped with a 4" thick concrete slab within the footprint of the new building and paved parking and roadways, which will prevent contact with soil.

Potential Routes of Exposure

Potential On-Site Exposures: An exposure route is the mechanism by which a receptor comes into contact with a chemical. Three potential primary routes exist by which chemicals can enter the body:

- Ingestion of water, fill or soil;
- Inhalation of vapors and particulates; and
- Dermal contact with water, fill, or soil.

Existence of Human Health Exposure

Under current conditions, exposure to onsite soils is limited by dense vegetation. Thee are no buildings or other enclosed structures on site. During construction, on-Site and off-Site exposures to contaminated dust from on-Site will be addressed through the Soil/Materials Management Plan, dust controls, and through the implementation of the Community Air Monitoring Program and a Construction Health and Safety Plan. Once the remedial actions and redevelopment of the Site has been completed, there will be no potential on-Site or off-Site exposure pathways. Soil will be removed and will achieve site specific soil cleanup objectives, the site will be fully covered, and a ventilated parking garage will be constructed beneath the commercial building space.

Overall Human Health Exposure Assessment

No contamination has been identified above applicable standards or guidance for soil or soil vapor and the baseline risks posed by this property are very low. Based on the intended future Site use as commercial property, the planned removal action and the engineering and

institutional controls included in this RAWP, no exposure pathways will exist after the remedial action is complete.

Based upon this analysis, complete on-Site exposure pathways appear to be present only during the remedial action phase. Under current conditions, on-Site exposure pathways exist for contractors and others that may access the Site. During remedial construction, on-Site and off-Site exposures to contaminated dust from historic fill material will be addressed through dust controls, and through the implementation of the Community Air Monitoring Program, the Soil/Materials Management Plan, and a Construction Health and Safety Plan.

5.0 REMEDIAL ACTION MANAGEMENT

5.1 PROJECT ORGANIZATION AND OVERSIGHT

Principal personnel who will participate in the remedial action include Eric Curran, who will be acting as the field supervisor.The Professional Engineer (PE) and Qualified Environmental Professionals (QEP) for this project are Brandon Nathe, P.E., and Nicholas J. Recchia, P.G.

5.2 SITE SECURITY

Site access will be controlled by gated entrances to the fenced property.

5.3 WORK HOURS

The hours for operation of remedial construction will be from 7:00AM to 3:00PM. These hours conform to the New York City Department of Buildings construction code requirements.

5.4 CONSTRUCTION HEALTH AND SAFETY PLAN

The Health and Safety Plan is included in Appendix 4. The Site Safety Coordinator will be Theresa Landgraff. Remedial work performed under this RAWP will be in full compliance with applicable health and safety laws and regulations, including Site and OSHA worker safety requirements and HAZWOPER requirements. Confined space entry, if any, will comply with OSHA requirements and industry standards and will address potential risks. The parties performing the remedial construction work will ensure that performance of work is in compliance with the HASP and applicable laws and regulations. The HASP pertains to remedial and invasive work performed at the Site until the issuance of the Notice of Completion.

All field personnel involved in remedial activities will participate in training required under 29 CFR 1910.120, including 40-hour hazardous waste operator training and annual 8-hour refresher training. Site Safety Officer will be responsible for maintaining workers training records.

Personnel entering any exclusion zone will be trained in the provisions of the HASP and be required to sign a HASP acknowledgment. Site-specific training will be provided to field

personnel. Additional safety training may be added depending on the tasks performed. Emergency telephone numbers will be posted at the site location before any remedial work begins. A safety meeting will be conducted before each shift begins. Topics to be discussed include task hazards and protective measures (physical, chemical, environmental); emergency procedures; PPE levels and other relevant safety topics. Meetings will be documented in a log book or specific form.

An emergency contact sheet with names and phone numbers is included in the HASP. That document will define the specific project contacts for use in case of emergency.

5.5 COMMUNITY AIR MONITORING PLAN

Real-time air monitoring for particulate levels and organic vapors at the perimeter of the exclusion zone or work area will be performed. Continuous monitoring will be performed for all ground intrusive activities and during the handling of contaminated or potentially contaminated media. Ground intrusive activities include, but are not limited to, soil/waste excavation and handling, test pit excavation or trenching, and the installation of soil borings or monitoring wells.

Exceedances of action levels observed during performance of the Community Air Monitoring Plan (CAMP) will be reported to the OER Project Manager and included in the Daily Report.

Particulate Monitoring, Response Levels, and Actions

Particulate concentrations will be monitored continuously at the upwind and downwind perimeters of the exclusion zone at temporary particulate monitoring stations. The particulate monitoring will be performed using real-time monitoring equipment capable of measuring particulate matter less than 10 micrometers in size (PM-10) and capable of integrating over a period of 15 minutes (or less) for comparison to the airborne particulate action level. The equipment will be equipped with an audible alarm to indicate anexceedance of the action level. In addition, fugitive dust migration should be visually assessed during all work activities.

- If the downwind PM-10 particulate level is 100 micrograms per cubic meter (mcg/m^3) greater than background (upwind perimeter) for the 15-minute period or if airborne dust is observed leaving the work area, then dust suppression techniques will be employed. Work will continue with dust suppression techniques provided that downwind PM-10

particulate levels do not exceed 150 mcg/m^3 above the upwind level and provided that no visible dust is migrating from the work area.

- If, after implementation of dust suppression techniques, downwind PM-10 particulate levels are greater than 150 mcg/m^3 above the upwind level, work will be stopped and a re-evaluation of activities initiated. Work will resume provided that dust suppression measures and other controls are successful in reducing the downwind PM-10 particulate concentration to within 150 mcg/m^3 of the upwind level and in preventing visible dust migration.

All readings will be recorded and be available for OER personnel to review.

5.6 AGENCY APPROVALS

All permits or government approvals required for remedial construction have been or will be obtained prior to the start of remedial construction. Approval of this RAWP by OER does not constitute satisfaction of these requirements and will not be a substitute for any required permit.

5.7 SITE PREPARATION

Pre-Construction Meeting

OER will be invited to attend the pre-construction meeting at the Site with all parties involved in the remedial process prior to the start of remedial construction and redevelopment activities.

Mobilization

Mobilization will be conducted as necessary for each phase of work at the Site. Mobilization includes field personnel orientation, equipment mobilization (including securing all sampling equipment needed for the field investigation), marking/staking sampling locations and utility mark-outs. Each field team member will attend an orientation meeting to become familiar with the general operation of the Site, health and safety requirements, and field procedures.

Utility Marker Layouts, Easement Layouts

The presence of utilities and easements on the Site will be fully investigated prior to the performance of invasive work, such as excavation or drilling under this plan by using, at a minimum, the One-Call System (811).Underground utilities may pose an electrocution,

explosion, or other hazard during excavation activities. All invasive activities will be performed incompliance with applicable laws and regulations to assure safety. Utility companies and other responsible authorities will be contacted to locate and mark the locations, and a copy of the Markout Ticket will be retained by the contractor prior to the start of drilling, excavation or other invasive subsurface operations. Overhead utilities may also be present within the anticipated work zones. Electrical hazards associated with drilling in the vicinity of overhead utilities will be prevented by maintaining a safe distance between overhead power lines and drill rig masts.

Proper safety and protective measures pertaining to utilities and easements, and compliance with all laws and regulations will be employed during invasive and other work contemplated under this RAWP. The integrity and safety of on-Site and off-Site structures will be maintained during all invasive, excavation or other remedial activity performed under the RAWP.

Equipment and Material Staging

Equipment and materials will be stored and staged in a manner that complies with applicable laws and regulations. The location of proposed equipment and material staging areas, truck inspection station, stockpile areas, and other pertinent remedial management features will be onsite.

Stabilized Construction Entrance

Steps will be taken to ensure that trucks departing the site will not track soil, fill or debris off-Site. Such actions may include use of cleaned asphalt or concrete roads or use of stone or other aggregate-based egress paths between the truck inspection station and the property exit. Measures will be taken to ensure that adjacent roadways will be kept clean of project related soils, fill and debris.

Truck Inspection Station

An outbound-truck inspection station will be set up close to the Site exit. Before exiting the NYC VCP Site, trucks will be required to stop at the truck inspection station and will be examined for evidence of contaminated soil on the undercarriage, body, and wheels. Soil and debris, which, if found, will be removed. Brooms, shovels and potable water will be utilized for the removal of soil from vehicles and equipment, as necessary.

Extreme Storm Preparedness and Response Contingency Plan

Damage from flooding or storm surge can include dislocation of soil and stockpiled materials, dislocation of site structures and construction materials and equipment, and dislocation of support of excavation structures. Damage from wind during an extreme storm event can create unsafe or unstable structures, damage safety structures, and cause downed power lines creating dangerous site conditions and loss of power. In the event of emergency conditions caused by an extreme storm event, the enrollee will undertake the following steps for site preparedness prior to the event and response after the event.

Storm Preparedness

Preparations in advance of an extreme storm event will include the following: containerized hazardous materials and fuels will be removed from the property; lose materials will be secured to prevent dislocation and blowing by wind or water; heavy equipment such as excavators and generators will be removed from holes, trenches and depressions on the property to high ground or removed from the property; an inventory of the property with photographs will be performed to establish conditions for the site and equipment prior to the event; stockpile covers for soil and fill will be secured by adding weights, such as sandbags for added security and worn or ripped stockpile covers will be replaced with competent covers; stockpiled hazardous wastes will be removed from the property; stormwater management systems will be inspected and fortified, including, as necessary, clean and reposition silt fences, hay bales; clean storm sewer filters and traps; and secure and protect pumps and hosing.

Storm Response

At the conclusion of an extreme storm event, as soon as it is safe to access the property, a complete inspection of the property will be performed. A site inspection report will be submitted to OER at the completion of site inspection and after the site security is assessed. Site conditions will be compared to the inventory of site conditions and material performed prior to the storm event and significant differences will be noted. Damage from storm conditions that result in acute public safety threats, such as downed power lines or imminent collapse of buildings, structures or equipment will be reported to public safety authorities via appropriate means, such as calling 911. Petroleum spills will be reported to NYS DEC within 2 hours of identification and consistent with State regulations. Emergency and spill conditions will also be reported to OER. Public safety structures, such as construction security fences will be repaired promptly to

eliminate public safety threats. Debris will be collected and removed. Dewatering will be performed in compliance with existing laws and regulations and consistent with emergency notifications, if any, from proper authorities. Eroded areas of soil including unsafe slopes will be stabilized and fortified. Dislocated materials will by collected and appropriately managed. Support of excavation structure will be inspected and fortified as necessary. Impacted stockpiles will be contained and damaged stockpile covers will be replaced. Storm-water control systems and structures will be inspected and maintained as necessary. If soil or fill materials are discharged off site to adjacent properties, property owners and OER will be notified and a corrective measure plan designed to remove and clean dislocated material will be submitted to OER and implemented following approval by OER and granting of site access by the property owner. Impacted offsite areas may require characterization based on site conditions, at the discretion of OER. If onsite petroleum spills are identified, a qualified environmental professional will determine the nature and extent of the spill and report to NYS DEC's spill hotline at DEC 800-457-7362. If the source of the spill is ongoing and can be identified, it should be stopped if this can be done safely. Potential hazards will be addressed immediately, consistent with guidance issued by NYS DEC.

Storm Response Reporting

A site inspection report will be submitted to OER at the completion of site inspection. An inspection report established by OER is available on OER's website (www.nyc.gov/oer) and will be used for this purpose.Site conditions will be compared to the inventory of site conditions and material performed prior to the storm event and significant differences will be noted. The site inspection report will be sent to the OER project manager and will include the site name, address, tax block and lot, and site primary and alternate contact name and phone number. Damage and soil release assessment will include: whether the project had stockpiles; whether stockpiles were damaged; photographs of damage and notice of plan for repair; report of whether soil from the site was dislocated and whether any of the soil left the site; estimates of the volume of soil that left the site, nature of impact, and photographs; description of erosion damage; description of equipment damage; description of damage to the remedial program or the construction program, such as damage to the support of excavation; presence of onsite or offsite exposure pathways caused by the storm; presence of petroleum or other spills and status of spill reporting to NYS DEC; description of corrective actions; schedule for corrective actions. This

report should be completed and submitted to the OER project manager with photographs within 24 hours of the time of safe entry to the property after the storm event.

5.8 TRAFFIC CONTROL

Drivers of trucks leaving the NYC VCP Site with soil/fill will be instructed to proceed without stopping in the vicinity of the site to prevent neighborhood impacts.

5.9 DEMOBILIZATION

Demobilization will include:

- As necessary, restoration of temporary access areas and areas that may have been disturbed to accommodate support areas (e.g., staging areas, decontamination areas, storage areas, temporary water management areas, and access area);
- Removal of sediment from erosion control measures and truck wash and disposal of materials in accordance with applicable laws and regulations, and;
- General refuse disposal.

Equipment will be decontaminated and demobilized at the completion of all field activities. Investigation equipment and large equipment (e.g., soil excavators) will be washed at the truck inspection station as necessary. In addition, all investigation and remediation derived waste will be appropriately disposed.

5.10 REPORTING AND RECORD KEEPING

Daily Reports

Daily reports providing a general summary of activities for each day of *active remedial work* will be emailed to the OER Project Manager by the end of the following day. Those reports will include:

- Project number and statement of the activities and an update of progress made and locations of work performed;
- Status of on-Site soil/fill stockpiles;
- A summary of all citizen complaints, with relevant details (basis of complaint; actions taken; etc.);

- A summary of CAMP excursions, if any;
- Photograph of notable Site conditions and activities.

The frequency of the reporting period may be revised in consultation with OER project manager based on planned project tasks.Daily email reports are not intended to be the primary mode of communication for notification to OER of emergencies (accidents, spills), requests for changes to the RAWP or other sensitive or time critical information. However, such information will be included in the daily reports. Emergency conditions and changes to the RAWP will be communicated directly to the OER project manager by personal communication. Daily reports will be included as an Appendix in the Remedial Action Report.

Record Keeping and Photo-Documentation

Job-site record keeping for all remedial work will be performed. These records will be maintained on-Site during the project and will be available for inspection by OER staff. Representative photographs will be taken of the Site prior to any remedial activities. Photographs will be submitted at the completion of the project in the RAR in digital format (i.e. jpg files).

5.11 COMPLAINT MANAGEMENT

All complaints from citizens will be promptly reported to OER. Complaints will be addressed and outcomes will also be reported to OER in daily reports. Notices to OER will include the nature of the complaint, the party providing the complaint, and the actions taken to resolve any problems.

5.12 DEVIATIONS FROM THE REMEDIAL ACTION WORK PLAN

All changes to the RAWP will be reported to the OER Project Manager and will be documented in daily reports and reported in the Remedial Action Report. The process to be followed if there are any deviations from the RAWP will include a request for approval for the change from OER noting the following:

- Reasons for deviating from the approved RAWP;
- Effect of the deviations on overall remedy; and

- Determination that the remedial action with the deviation(s) is protective of public health and the environment.

6.0 REMEDIAL ACTION REPORT

A Remedial Action Report (RAR) will be submitted to OER following implementation of the remedial action defined in this RAWP. The RAR will document that the remedial work required under this RAWP has been completed and has been performed in compliance with this plan. The RAR will include:

- Information required by this RAWP;
- As-built drawings for all constructed remedial elements, required certifications, manifests and other written and photographic documentation of remedial work performed under this remedy;
- Description of any changes in the remedial action from the elements provided in this RAWP and associated design documents;
- Data from the Community Air Monitoring Program (CAMP);
- Recorded Declaration of Covenants and Restrictions; and
- Reports and supporting material will be submitted in digital form.

Remedial Action Report Certification

The following certification will appear in front of the Executive Summary of the Remedial Action Report.The certification will include the following statements:

I, Nicholas J. Recchia, am a qualified Environmental Professional. I had primary direct responsibility for implementationof the remedial program for the Woodrow Plaza LLCSite.

I certify that the OER-approved Remedial Action Work Plan datedMarch 19, 2013was implemented and that all requirements have been substantively complied with. I certify that contaminated soil, fill, liquids or other material from the property were taken to facilities licensed to accept this material in full compliance with applicable laws and regulations.

7.0 SCHEDULE

The table below presents a schedule for the proposed remedial action and reporting. If the schedule for remediation and development activities changes, it will be updated and submitted to OER. Currently, a one month remediation period is anticipated.

Schedule Milestone	Weeks from Remedial Action Start	Duration (weeks)
OER Approval of RAWP	5	1
Fact Sheet 2 announcing start of remedy	0	-
Mobilization	6	1
Remedial Excavation	8	2
Demobilization	9	1
Submit Remedial Action Report	13	4

APPENDIX 1

PROPOSED DEVELOPMENT PLANS

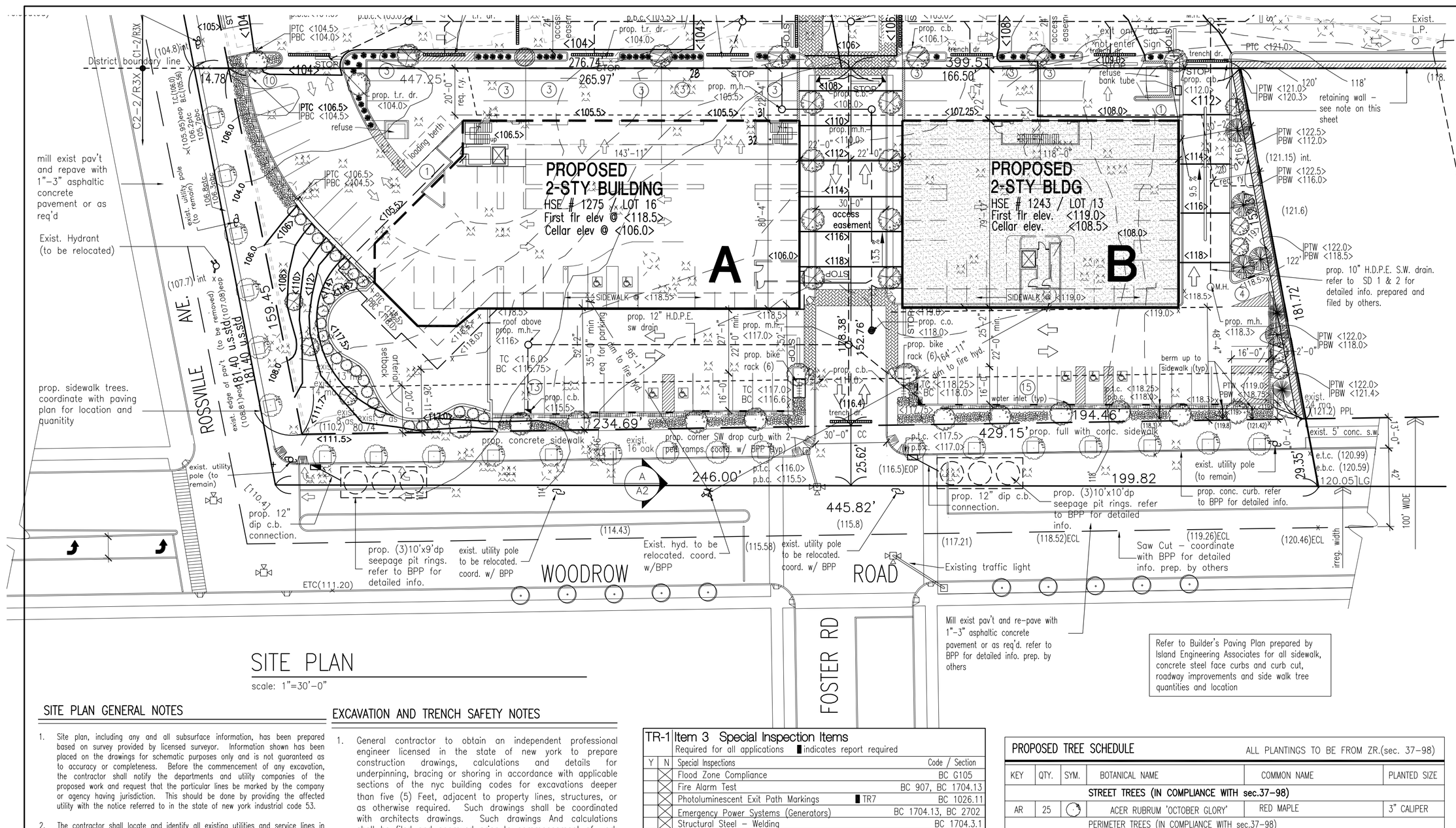

SITE PLAN

scale: 1"=30'-0"

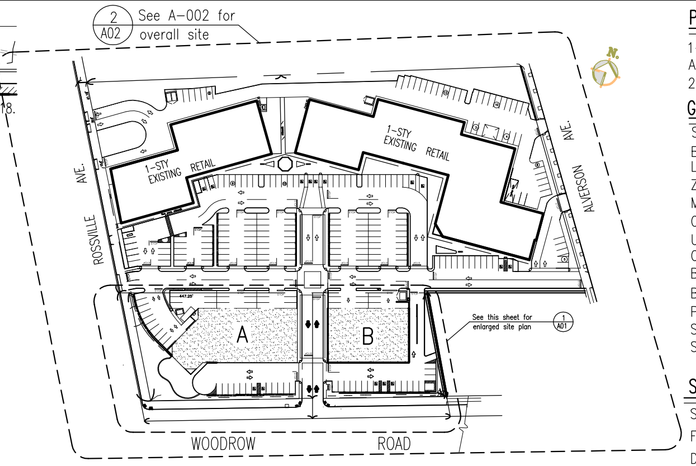

KEY PLAN

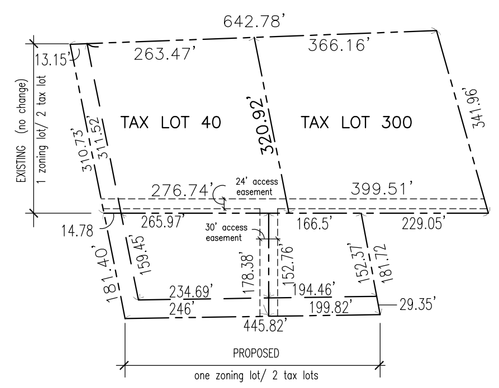

ZONING/TAX LOT DIAGRAM

block 6145

PROJECT DESCRIPTION

1-PROPOSED 2 COMMERCIAL BUILDINGS INDICATED AS BUILDING A AND B, WITH AN ACCESS EASEMENT LEADING INTO AN EXISTING RETAIL DEVELOPMENT.
2 - FOR RE-GRADING OF EXISTING PARKING LOT SEE DoB APPLICATION #

GENERAL DATA

SEE APPROVED CPC APPLICATION NO.	
BLOCK:	6145
LOT:	13 & 16
ZONE:	C2-2/R3x
MAP:	33 A
OCC. GROUP:	B & M
USE GROUP:	6
CONSTRUCTION CLASS	TYPE 3A
BUILDING HEIGHT	30'-0"
BUILDING STORIES	2
PRIMARY STRUCTURAL SYSTEM	STEEL
STRUCTURAL OCCUPANCY CATEGORY	2
SEISMIC DESIGN CATEGORY	C

SPECIAL DISTRICT

SOUTH RICHMOND DISTRICT	INSIDE
FLOOD ZONE	OUTSIDE
DESIGNATED OPEN SPACE	OUTSIDE
WETLANDS	OUTSIDE
NATURAL AREA	OUTSIDE
FIRE DISTRICT	OUTSIDE
S.R.D. ARTERIAL (WOODROW ROAD)	INSIDE
PARK STREET	OUTSIDE
HILLSIDE PRESERVATION	OUTSIDE

ZONING CALCULATIONS

LOT AREA 66,033.14 SF

	BUILDING A	BUILDING B	TOTAL
LOT COVERAGE	10,978.47 SF	8,009.00 SF	18,934.00 SF
OPEN SPACE	- SF	- SF	47,099.14 SF
CELLAR FA (EXCLUDED)	- SF	667.00 SF	667.00 SF
FIRST FLOOR AREA	11,192.07 SF	7,636.28 SF	18,828.35 SF
SECOND FLOOR AREA	10,849.52 SF	7,522.13 SF	18,371.65 SF
TOTAL NET FLOOR AREA	22,041.59 SF	15,158.41 SF	37,200.00 SF

PARKING CALCULATIONS

As per section 36-21 zr - for use group 6, Parking category "B", 1 space is required for 300sf of floor area .

BUILDING A
22,041.59 sf/300 = 73 spaces required and provide with 5% of required spaces to be handicap accessible. 73 / 5% = 4 required spaces.

BUILDING B

15,158.41 sf /300 = 51 spaces required and provide with 5% of required spaces to be handicap accessible. 51 / 5% = 2 required spaces.

Loading berths - As per section 36-62 ZR, Accessory off-street loading berths required as follow:

Mercantile - 1st 8,000 sf - none required , next 17,000 sf - 1 required
Total Mercantile F.A. = 18,828.35 therefor 1 required , 1 provided
Offices - 1st 25,000 sf - non required
Total Office F.A. = 18,934.0 therefor 0 required

Bicycle parking requirements - 1 bicycle space required per 10 parking spaces up to 200 vehicles -
124 prk spaces / 12 = 12 bicycle space provides

TREE CALCULATIONS

NOTE
Trees to be 3" cal. At time of planting, chosen from Zoning resolution Sect. 37-98.

STREET TREES:
provide (1) tree for every 25' of street frontage) Street frontage(627.22)/25'= (25) trees

total req'd trees (street length/25) $\frac{181.411'+445.82'}{25}$ =25 trees required
~~new trees req'd~~ =25 newor as permissible by parks dept.

new trees planted- ON SITE =22 new
OFF SITE = 3 new
Total = 25 new

PARKING TREES: Sect. 107-483
(provide (1) tree for every (4)pk'g. Spaces
Total parking spaces = 124 - 49 covered spaces = 75 open parking spaces
Open parking spaces = 75
75 / 4 =~~19~~ req. parking lot Trees
19 parking lot tree required /63 total tree provided

GRADE LEVEL CALCULATION - B.C.

As per section 502.1 B.C., GRADE level shall be determined by adjoining grade elevations determined at final grade elevations at every 10'-0" interval around perimeter of building.

(20)118.5 + 23 (105.5) + 118 + 117 + 116 + 115 + 114 + 113 + 112 + 111 + 110 = 5822.5 /52 = 111.9 adjoining grade elevation therefor cellar as per buildings code. refer to section A-A on sheet A10

CURB LEVEL CALCULATION - Z.R.

As per section 12-10 B.C., curb level shall be used to determined lowest level. Curb level is the mean level adjoining the zoning lot.

HSE 1275 / LOT 16 (building a)
111.5 + 106.0 /2 = 108.75
116 +111.5 = 227.5 /2 = 113.75
108.75 + 113.75 =222.5 /2 = 111.25 curb level
refer to section A-A on sheet A10

LIST OF DRAWINGS - Building B

ARCHITECTURALS		CIVIL	
A-001	Site plan and Details	1 of 2	Storm and Sanitory drainage plan
A-002	Overall Site Plan	BPP-010	Builders pavement plan 1 of 3
A-002a	Site Details	BPP-010	Builders pavement plan 2 of 3
A-003	Cellar Plan	BPP-010	Builders pavement plan 3 of 3
A-004	First Floor Plan		
A-005	Second Floor Plan		
A-006	Roof Plan and Details		
A-007	Elevations		
A-008	Building section and stair dtls	STRUCTURAL	
A-009	Wall Section 1 & 2	S-001	Foundation Plan
A-010	Wall Section 3 & Details	S-002	Details
A-011	Bldg Section B-B, Details, Door Notes, General Notes	S-003	First floor framing plan
		S-004	Second floor framing plan
A-012	Partition Types & Column Enclosure Details	S-005	Roof framing plan
		S-006	Section & Details
A-013	Reflected Ceiling plans & Details	S-007	Section & Details
		S-008	Notes
A-014	General Notes, Specifications		

SITE PLAN GENERAL NOTES

1. Site plan, including any and all subsurface information, has been prepared based on survey provided by licensed surveyor. Information shown has been placed on the drawings for schematic purposes only and is not guaranteed as to accuracy or completeness. Before the commencement of any excavation, the contractor shall notify the departments and utility companies of the proposed work and request that the particular lines be marked by the company or agency having jurisdiction. This should be done by providing the affected utility with the notice referred to in the state of new york industrial code 53.
2. The contractor shall locate and identify all existing utilities and service lines in and around project site and take adequate measures to safeguard the public and property before such utilities are disturbed. Contractor shall make all necessary arrangements with utility companies or city agencies at least seventy-two hours in advance of removing. Relocating, interrupting, or otherwise disturbing utilities.
3. See approved sanitary & storm drainage plan by others for all storm & sanitary disposal information not shown on these plans.
4. See approved sidewalk, curb & roadway application for all curb & sidewalk locations, alignments and all street improvements. This information shown on this site plan is for diagrammatic purposes only.
5. Proposed construction will not have any effect on existing structures or surface facilities located on adjacent lots.
6. Owner/builder of the referenced property state that work done under this application will have no adverse effect on any surrounding properties concerning storm water drainage. Moreover, he will be responsible to make certain that while the work is being done, the surrounding properties will be protected from storm water drainage.
7. Final survey to show grades at all points where proposed grades are shown on plan.
8. The contractor shall provide a construction fence in accordance with the rules and regulations of any and all agencies having jurisdiction, along the perimeter of the project site not protected by a sidewalk shed or adjacent building walls to remain.
9. Construction inspector to be notified to verify completion of flatwork before final survey is taken.
10. Owners structural engineer shall verify stability & integrity of soil, adjacent buildings, & foundations prior to any construction.
11. General contractor to obtain an independent professional engineer licensed in the state of new york to prepare construction drawings, calculations and details for underpinning, bracing or shoring in accordance with applicable sections of the nyc building codes for excavations deeper than five (5) feet adjacent to property lines, structures, or as otherwise required. Such drawings shall be coordinated with architects drawings. Drawings shall be filed by P.E. and approved prior to commencement of work.
12. Water meters shall be installed in accordance with any N.Y.C. Agency having jurisdiction in accordance with local law 53/85.
13. Yards with 3% slope or less can be seeded or sodded, yards exceeding 3% slope to be sodded; where drywells are installed, splashblocks may be used for the disposal of storm water provided that the yards are sodded. Where storm water is being disposed via underground piping, yards with 3% slope or less, can be seeded.
14. This is to certify that there are no streams nor natural watercourses on this property.
15. Building address numbers shall be provided so as to comply with section fc505 "premises identification", of the new york city fire code.
16. Contractor shall check and verify all dimensions, sizes, & conditions before commencement of any work. All discrepancies shall be reported to the architect.
17. Owner/contractor shall hire an independent engineer for design & filing/approval of all on site retaining walls.

EXCAVATION AND TRENCH SAFETY NOTES

1. General contractor to obtain an independent professional engineer licensed in the state of new york to prepare construction drawings, calculations and details for underpinning, bracing or shoring in accordance with applicable sections of the nyc building codes for excavations deeper than five (5) Feet, adjacent to property lines, structures, or as otherwise required. Such drawings shall be coordinated with architects drawings. Such drawings And calculations shall be filed and approved prior to commencement of work with the department of buildings under separate application and be Subject to special inspections as per bc 1704.19.
2. Each side of an excavation or trench that is 5 feet or deeper must be protected by shoring/bracing and sheeting or be sloped, unless It is cut from rock.
3. Each open side of of an excavation or trench shall have a guardrail or a solid enclosure
4. Each excavation or trench shall have a way out such as ladder or ramp.
5. Regularly check the walls of an excavation or trench for cracks, bulges and spoiling and check the shoring for signs of distress, Especially after a rainstorm.
6. Refer to section bc 3304.4.1 of the nyc construction codes (www.Nyc.Gov/buildings) and osha's regulations (www.Osha.Gov) for details on the Proper protection of an excavation or trench.

RETAINING WALLS

GENERAL CONTRACTOR TO OBTAIN/HIRE AN INDEPENDENT NEW YORK LICENSED PROFESSIONAL ENGINEER FOR THE DESIGN, FILING AND APPROVAL OF ALL RETAINING WALLS.

TR-8 Item 3 Energy Code Progress Inspection

Y	N	Progress Inspections Table reference in RCNY 5000-01 (b) (1) and (2)	
X		Protection of foundation insulation	(IA1),(IIA1)
X		Insulation placement and R values	(IA2),(IIA2)
X		Fenestration thermal values and ratings	(IA3),(IIA3)
X		Fenestration rating for air leakage	(IA4),(IIA4)
X		Fenestration areas	(IA5),(IIA5)
X		Air sealing and insulation - Visual	(IA6),(IIA6)
	X	Air sealing and insulation - testing	(IA7)
	X	Protection factors	(IIA7)
	X	Loading deck weather seals	(IIA8)
	X	Vestibules	(IIA9)
	X	Fireplaces	(IB1),(IIB1)
	X	Dampers integral envelope	(IB2),(IIB2)
	X	HVAC and service water heating equipment	(IB3),(IIB3)
	X	HVAC and service water heating system controls	(IB4),(IIB4)
	X	Duct plenum and piping insulation and sealing	(IB5),(IIB5)
	X	Duct leakage testing	(IB6),(IIB6)
	X	Electrical metering	(IC1),(IIC1)
	X	Lighting in dwelling units	(IC2),(IIC2)
	X	Interior lighting power	(IIC3)
	X	Exterior lighting power	(IIC4)
	X	Lighting controls	(IIC5)
	X	Exit signs	(IIC6)
	X	Tandem wiring	(IIC7)
	X	Electrical motors	(IIC8)
X		Maintenance information	(IID1),(IID1)
X		Permanent certificate	(ID2)

TR-1 Item 3 Special Inspection Items

Required for all applications ▌indicates report required

Y	N	Special Inspections	Code / Section
	X	Flood Zone Compliance	BC 0105
	X	Fire Alarm Test	BC 907, BC 1704.13
	X	Photoluminescent Exit Path Markings ▌TR7	BC 1026.11
	X	Emergency Power Systems (Generators)	BC 1704.13, BC 2702
	X	Structural Steel - Welding	BC 1704.3.1
	X	Structural Steel - Erection & Bolting	BC 1704.3.2, BC 1704.3.3
	X	Structural Cold-Formed Steel	BC 1704.3.4
	X	Concrete - Cast-In-Place	BC 1704.4
	X	Concrete - Precast	BC 1704.4
	X	Concrete - Prestressed	BC 1704.4
	X	Masonry	BC 1704.5
	X	Wood - Off-Site Fabrication of Structural Elements	BC 1704.6
	X	Wood - Installation of High-Load Diaphragms	BC 1704.6.1
	X	Wood - Installation of Metal-Plate-Connected Trusses	BC 1704.6.3
	X	Wood - Installation of Prefabricated I-Joists	BC 1704.6.4
X		Soils - Site Preparation	BC 1704.7.1
	X	Soils - Fill Placement & In-Place Density	BC 1704.7.2, BC 1704.7.3
X		Soils - Investigations (Borings / Test Pits) ▌TR4 (Building)	BC 1704.7.4
	X	Pile Foundations & Drilled Pier Installation ▌TR5	BC 1704.8
	X	Pier Foundations	BC 1704.9
	X	Underpinning	BC 1704.9.1
	X	Wall Panels, Curtain Walls, and Veneers ▌	BC 1704.10
X		Sprayed Fire-Resistant Materials	BC 1704.11
	X	Exterior Insulation Finish Systems (EIFS)	BC 1704.12
	X	Alternative Materials - OTCR Buildings Bulletin #	BC 1704.13
	X	Smoke Control Systems	BC 1704.14
	X	Mechanical Systems	BC 1704.15
	X	Fuel-Oil Storage and Fuel-Oil Piping Systems	BC 1704.16
	X	High-Pressure Steam Piping (Welding)	BC 1704.17
	X	Fuel-Gas Piping (Welding)	BC 1704.18
	X	Structural Safety - Structural Stability	BC 1704.19
	X	Mechanical Demolition	BC 1704.19, BC 3306.6
	X	Excavation - Sheeting, Shoring, and Bracing	BC 1704.19, BC 3304.4.1
	X	Soil Percolation Test - Drywell ▌	BC 1704.20.1
	X	Soil Percolation Test - Septic ▌	BC 1704.20.1
	X	Site Storm Drainage Disposal and Detention System Installation	BC 1704.20
	X	Septic System Installation	BC 1704.20
	X	Sprinkler Systems	BC 1704.21
	X	Standpipe Systems	BC 1704.22
	X	Heating Systems	BC 1704.23
	X	Chimneys	BC 1704.24
X		Firestop, Draftstop, and Fireblock Systems	BC 1704.25
	X	Aluminum Welding	BC 1704.26
	X	Seismic Isolation Systems	BC 1707.8
	X	Concrete Test Cylinders ▌TR2	BC 1905.6
	X	Concrete Design Mix ▌TR3	BC 1905.3

TR-1 Item 4 Progress Inspection Items

Y	N	Progress Inspections	Code / Section
	X	Preliminary	28-116.2.1, BC 109.2
	X	Footing and Foundation	BC 109.3.1
	X	Lowest Floor Elevation (attach FEMA form)	BC 109.3.2
	X	Frame Inspection	BC 109.3.3
	X	Energy Code Compliance Inspections	BC 109.3.5
X		Fire-Resistance Rated Construction	BC 109.3.4
	X	Public Assembly Emergency Lighting	28-116.2.2
	X	Final	28-116.2.4.2, BC109.5,
		Directive 14 of 1975, and 1 RCNY 101-10	

PROPOSED TREE SCHEDULE

ALL PLANTINGS TO BE FROM ZR.(sec. 37-98)

KEY	QTY.	SYM.	BOTANICAL NAME	COMMON NAME	PLANTED SIZE
STREET TREES (IN COMPLIANCE WITH sec.37-98)					
AR	25		ACER RUBRUM 'OCTOBER GLORY'	RED MAPLE	3" CALIPER
PERIMETER TREES (IN COMPLIANCE WITH sec.37-98)					
PK	17		PRUNUS 'SERRALATA KWANZAN	JAPANESE FLOWERING CHERRY	3" CALIPER
existing	2		EXISTING MAPLE		
INTERIOR TREES (IN COMPLIANCE WITH sec.37-98)					
existing	17		7"aspen, 8"aspen, 14"map, 2-7"map, 13"map, 16" oak, 8"ash, 24"map.= (17 credits)		
FA	32		FRAXINUS AMERICANA	AMERICAN ASH	3" CALIPER
PP	7		PICEA PUNGENS	COLORADO SPRUCE	3" CALIPER
PS	4		PINUS STROBUS	EASTERN WHITE PINE	3" CALIPER
PO	3		PICEA OMERIKA	SERBIAN SPRUCE	3" CALIPER
total 63 interior trees					
GROUND COVER & SHRUBS (IN COMPLIANCE WITH sec.37-98)					
KA	see plan		KALMIA ANGUSTIFOLIA	SHEEP LAUREL	18"-24" CONT.
JH	see plan		JUNIPERUS HORIZENTALS	CREEPING JUNIPER	18"-24" CONT.
MD	see plan		MICROBIOTA DECUSSATA	RUSSIAN ARBORVITAE	18"-24" CONT.
PARKING LOT SCREENING (PERIMETER PLANTING STRIP IN COMPLIANCE WITH 107-483)					

SITE LEGEND

- 00 — Existing contours
- 00 — Existing contours to be modified
- 00 — Proposed contours
- Proposed trees - see landscape plan
- Proposed sidewalk trees - coordinate with paving plan prepared by others for location and quanities
- Existing trees to be removed - see landscape plan
- [ ] Legal grade
- < > Proposed grade
- ( ) Existing grade
- Proposed retaining wall. (g.c. to obtain an independent P.E. for the design and filing of all retaining walls.
- Proposed curb

TREE NOTES

NOTE
Trees to be 3" cal. At time of planting, chosen from Zoning resolution Sect. 37-98.

STREET TREES: (sec 107-322 b)
(provide (1) tree for every 25' of street frontage)

Planting and screening for open parking areas sec 107-483
(a) Tree planting requirements One tree, of three inch caliper or more, preexisting or newly planted, shall be provided for each four parking spaces. Such trees shall be located in the perimeter landscaped area of the parking area and at least 50%%% are located in planting islands within the parking area. Such planting islands have a minimum area of 150 square feet of pervious surface and comply with the requirements of paragraphs (a), (b) and (c) of Section 37-922 (Interior landscaping).
(b) Screening requirements
The parking area will be screened from all adjoining #zoning lots# by a landscaped area at least four feet in width, densely planted with shrubs maintained at a maximum height of three feet. Such parking area will also be screened from all adjoining #streets# by a perimeter landscaped area at least seven feet in width. Such perimeter landscaped area may be interrupted only by vehicular entrances and exits. Sidewalks that provide a direct connection between the public sidewalk and a pedestrian circulation route within the parking area may also interrupt a perimeter landscaped area. In addition, such screening shall be maintained in good condition at all times and may be interrupted by normal entrances and exits.
(c) Planting Waiver- For #developments# in #Commercial# or which provide trees in accordance with the provisions of this Section, the requirements of Section 107-322, paragraph (a), shall not apply.

LANDSCAPING,
Perimeter landscaping grading, drainage and soil - sec 37-921 (a)
The open parking area shall be graded to allow stormwater runoff to drain into all required perimeter landscaped areas and planting islands required pursuant to Section 37-922 (Interior landscaping). The perimeter landscaped area shall be comprised of soil with a depth of at least two and a half feet measured from the adjoining open parking area. Beneath such soil, filter fabric and one foot of gravel shall be provided. Proper drainage rates shall be attained through underdrains that are connected to detention storage that meets the drainage and flow requirements of the Department of Environmental Protection or through infiltration through the surrounding soil volume.The perimeter landscaped area shall have an inverted slope to allow a minimum of six inches and a maximum of one foot of stormwater ponding, and surface ponding will drain in at least 24 hours. To allow for adequate drainage, elevated catchbasins will be placed in the planting island above the ponding level. A raised curb shall edge the perimeter landscaped area, will be at least six inches in height and will contain inlets at appropriate intervals to allow stormwater infiltration from the open parking area.

RETAINING WALLS

General contractor to obtain/hire an independent new york licensed professional engineer for the design, filing and approval of all retaining walls.

APPLICATIONS TO BE FILED UNDER SEPARATE APPLICATION

1. Mechanical plans
2. Sprinkler plans
3. Builders pavement plan
4. Elevator plans
5. Curb cuts
6. Boiler
7. Standpipe
8. Fire alarm
9. emergency generator
10. fire protection plan
11. site safety plan
12. Retaining walls

STORM WATER AND DRAINAGE NOTE

For all storm and sanitary drainage information, refer to approved sd1 and 2 prepared by others.

No.	Revisions	Date
1	Issued for Client Review	12/22/2011
2	Issued paperwork	01/09/2012
3	Answered DoB obj.	04/06/2012
4	For estimating only	09/13/2012
5	Issued for DoB appr	10/22/2012
6	Adjusted stair enclosure	1/16/2012

DOB Examiner stamp:

DOB Approval:

B-Scan job sticker:

The architect shall not have control or charge of and shall not be responsible for construction means, methods, deviations, techniques, sequences, or procedures, or for safety precautions and programs in connection with the work, for the acts or omissions of the contractor, subcontractors or any other persons performing any of the work, or for the failure of any of them to carry out the work in accordance with the contract documents. Always use dimensions as shown. Drawings are not to be scaled.

rampulla associates architects, l.l.p.
155 3rd street S.I., N.Y., 10306
•718 987-1310 •fax 718-987-1565
www.rampulla.net

project title :
PROPOSED WOODROW SHOPPING CENTER
1243 WOODROW ROAD
STATEN ISLAND, NEW YORK

BUILDING B

drawing title :
SITE PLAN, ZONING AND CODE DATA, GENERAL NOTES

seal & signature

date:	7.22.11
project #:	10009
drawing by:	RD
chk by:	RD
dwg #:	A-001.00
file #:	

1 OF 16

COPYRIGHT

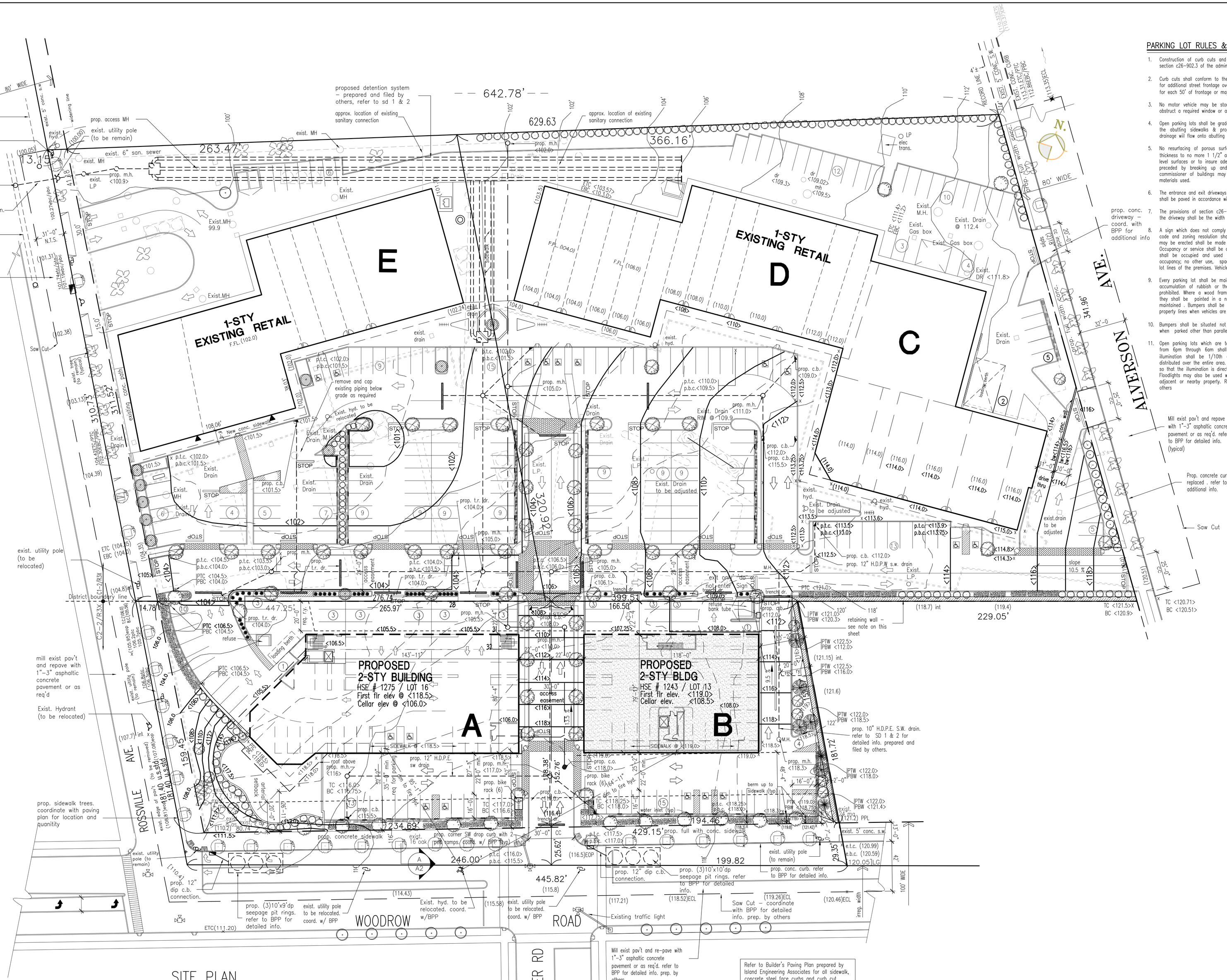

SITE PLAN

scale: 1"=30'-0"

PARKING LOT RULES & REGULATIONS

1. Construction of curb cuts and sidewalks shall comply with the provisions of section c26-902.3 of the administrative code.
2. Curb cuts shall conform to the requirements of section c26-712.2(b), except for additional street frontage over 100 feet,there may be an additional curb cut for each 50' of frontage or major fraction thereof.
3. No motor vehicle may be stored or parked in any location where it would obstruct a required window or a required exit.
4. Open parking lots shall be graded to conform approximately to the elevation of the abutting sidewalks & properties and shall be maintained so that no drainage will flow onto abutting sidewalks and adjoining properties.
5. No resurfacing of porous surfaces shall be done which would increase the thickness to no more 1 1/2" after compaction. Maintenance repairs to maintain level surfaces or to insure adequate drainability of porous surfaces shall be preceded by breaking up and removal of existing asphaltic concrete. The commissioner of buildings may require suitable tests to be submitted of the materials used.
6. The entrance and exit driveways between the curb line and the open parking lot shall be paved in accordance with
7. The provisions of section c26-902.3 of the administrative code. The width of the driveway shall be the width of the opening in the enclosure.
8. A sign which does not comply with all the requirements of the administrative code and zoning resolution shall not be erected or maintained. Signs which may be erected shall be made secure, neatly lettered and properly maintained. Occupancy or service shall be conducted on the premises. An open parking lot shall be occupied and used for the purpose stated on the certificate of occupancy; no other use, space used for parking shall be entirely within the lot lines of the premises. Vehicles shall not encroach on the sidewalks.
9. Every parking lot shall be maintained in a clean and sanitary condition. The accumulation of rubbish or the storage of any kind of junk or waste is prohibited. Where a wood frame shelter, wood fence or railing are permitted they shall be painted in a neat, workmanlike manner and shall be properly maintained . Bumpers shall be situated not less than one foot from adjacent property lines when vehicles are parked parallel to such adjacent property lines.
10. Bumpers shall be situated not less than 4'-0" from adjacent property lines when parked other than parallel to such adjacent property lines.
11. Open parking lots which are to be operated during any portion of the time from 6pm through 6am shall be adequately illuminated and the minimum illumination shall be 1/10th of one watt per sq. Foot of parking area, distributed over the entire area. Lights shall be provided with reflectors arranged so that the illumination is directed downward and away from adjacent buildings. Floodlights may also be used where such floodlights do not project light upon adjacent or nearby property. Refer to parking light lighting plan prepared by others

No.	Revisions	Date
1	Issued for Client Review	12/22/2011
2	Issued paperwork	01/09/2012
3	Answered DoB obj.	04/06/2012
4	For estimating only	09/13/2012
5	Issued for DoB appr	10/22/2012
6	Adjusted stair enclosure	1/16/2012

DOB Examiner stamp:

DOB Approval:

B-Scan job sticker:

The architect shall not have control or charge of and shall not be responsible for construction means, methods, deviations, techniques, sequences, or procedures, or for safety precautions and programs in connection with the work, for the acts or omissions of the contractor, subcontractors or any other persons performing any of the work, or for the failure of any of them to carry out the work in accordance with the contract documents. Always use dimensions as shown. Drawings are not to be scaled.

rampulla associates architects, l.l.p.

155 3rd street S.I., N.Y., 10306
• 718 987-1310 • fax 718-987-1565
www.rampulla.net

project title :

PROPOSED WOODROW SHOPPING CENTER
1275 WOODROW ROAD
STATEN ISLAND, NEW YORK

BUILDING B

drawing title :

OVERALL SITE PLAN

seal & signature

date:	7.22.11
project #:	10009
drawing by:	RD
chk by:	RD
dwg #:	A-002.00
file #:	

COPYRIGHT

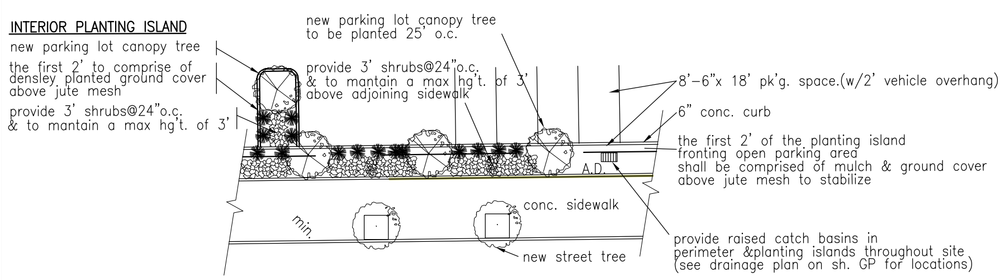

PERIMETER PLANTING STRIP

ALL PLANTINGS TO BE FROM ZR.(sec. 37-98) N.T.S.

TRAFFIC SIGNAGE / PAVEMENT MARKINGS LEGEND

SYMBOL	SIGN	DESCRIPTION	SYMBOL	SIGN	DESCRIPTION
● R1-1	STOP	Stop signs (30"x 30")shall be an shall be an octagon with white message and border on a red background		6'	Painted traffic flow indicator (pavement marking)
				6'	Painted right turn lane – use arrow (pavement marking)
■ R7-8		Parking reserved handicapped accessible parking sign to be placed @ end of each group of h.C. Accessible spaces w/ arrow pointing in direction of the h.C. Spaces		6'	Painted left turn lane – use arrow (pavement marking)
			STOP	STOP	12" wide x width of lane stop line – paint solid w/ word "s t o p" painted solid (pavement marking)

Note:
Owner to consult Department of Transportation engineer for road symbol marking and signage. Install as required. (typical)

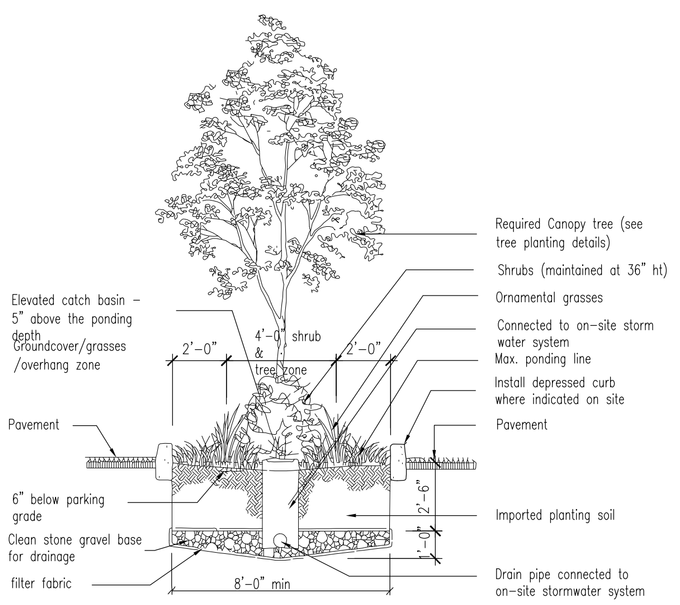

A / CPC-5 BIO-SWALE LANDSCAPE ISLAND DETAIL
SCALE: 1/4"=1'-0"

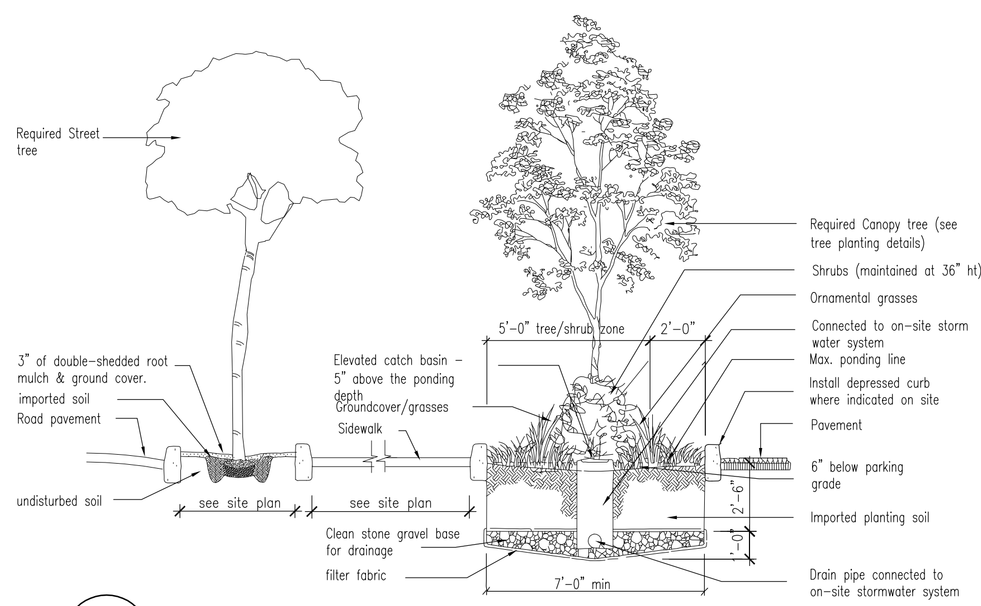

B / CPC-5 PERIMETER PLANTING ISLAND
SCALE: 1/4"=1'-0"

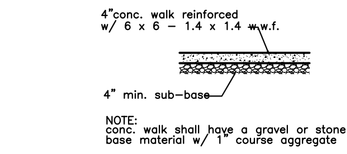

NOTE:
conc. walk shall have a gravel or stone base material w/ 1" course aggregate

1 INTERIOR SIDEWALK DTL
N.T.S.

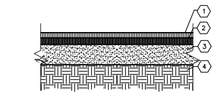

1. 1 1/2" wearing surface over tack coat.
2. 2" binder course over prime coat.
3. 6" (MIN.) CLEAN, GRADED AND COMPACTED STONE (NO SLAG).
4. WELL-DRAINED SUB-GRADE (SUB-GRADE TO MODIFIED 95 PROCTOR MIN. COMPACTION).
5. 8" CLEAN, GRADED & COMPACTED STONE BASE (NO SLAG).

2 PARKING LOT PAVING DETAIL
N.T.S.

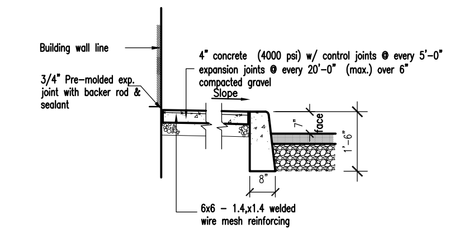

3 CURB DETAIL/ INTER. SIDEWALK
N.T.S.

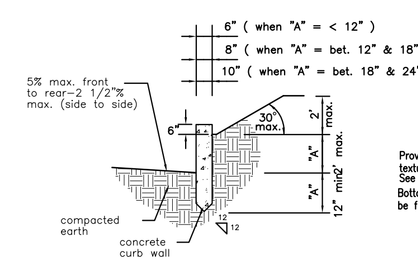

4 CURB WALL DETAIL
N.T.S.

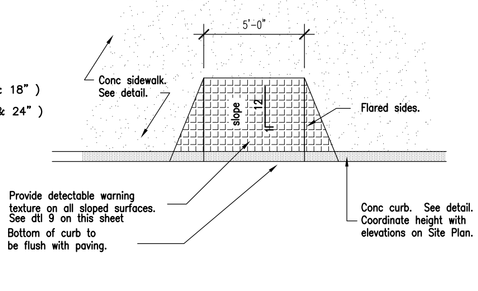

5 DROP CURB DETAIL
N.T.S.

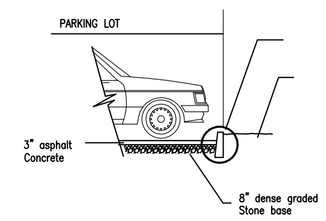

6 SECTION THRU PARKING CURB
N.T.S.

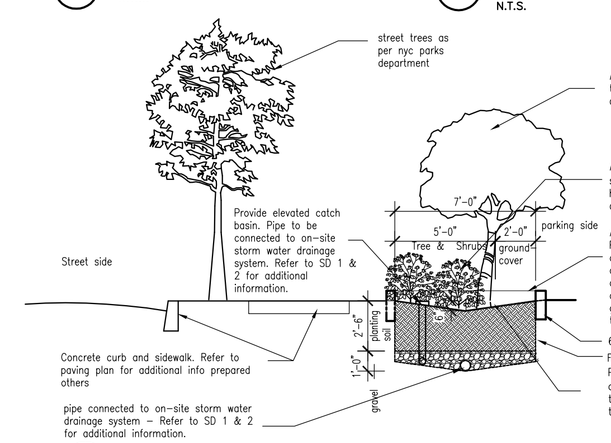

8 PERIMETER PLANTING ISLAND
SCALE: 1/4"=1'-0"

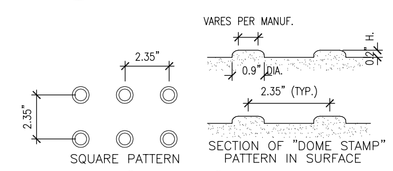

PLAN OF "DOME STAMP" PATTERN IN SURFACE

Curb ramps must have a detectable warning feature extending the full width and depth of the ramp (mid-walk "in-line" ramps only need detectable warnings at walk/parking transition). The detectable surface must consist of raised truncated domes with a diameter of nominal 0.9 inches, a height of nominal 0.2 inches and a center-to center spacing of nominal 2.35 inches. The texture of the detectable warning feature must contrast with the surrounding surfaces (either light-on-dark or dark-on-light). See also

9 DETECTABLE WARNING SYSTEM
N.T.S.

No.	Revisions	Date
1	Issued for Client Review	12/22/2011
2	Issued paperwork	01/09/2012
3	Answered DoB obj.	04/06/2012
4	For estimating only	09/13/2012
5	Issued for DoB appr	10/22/2012
6	Adjusted stair enclosure	1/16/2012

DOB Examiner stamp:

DOB Approval:

B-Scan job sticker:

The architect shall not have control or charge of and shall not be responsible for construction means, methods, deviations, techniques, sequences, or procedures, or for safety precautions and programs in connection with the work, for the acts or omissions of the contractor, subcontractors or any other persons performing any of the work, or for the failure of any of them to carry out the work in accordance with the contract documents. Always use dimensions as shown. Drawings are not to be scaled.

rampulla associates architects, l.l.p.
155 3rd street S.I., N.Y., 10306
• 718 987-1310 • fax 718-987-1565
www.rampulla.net

project title :

PROPOSED WOODROW SHOPPING CENTER
1243 WOODROW ROAD
STATEN ISLAND, NEW YORK

BUILDING B

drawing title :

SITE PLAN - DETAILS

seal & signature

date:	7.22.11
project #:	10009
drawing by:	RD
chk by:	RD
dwg #:	A-002A.00
file #:	3 OF 16

© COPYRIGHT

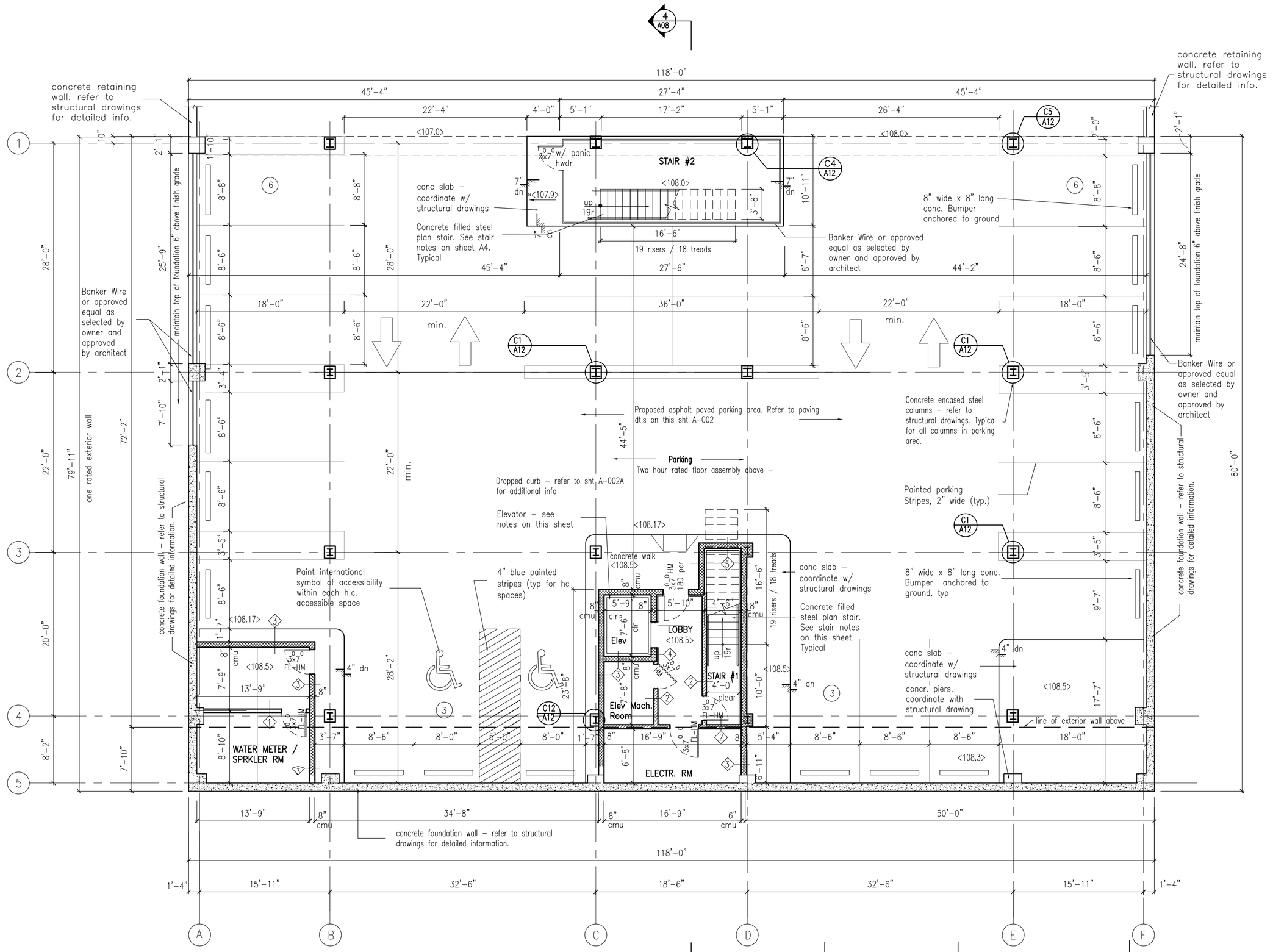

CELLAR FLOOR PLAN

SCALE: 1/8"=1'-0"

DRAWING SYMBOL LEGEND AND NOTES

- Building section number / Drawing number Where detail is drawn
- Wall section number / Drawing number Where detail is drawn
- Detail number / Drawing number Where detail is drawn
- Wall type tag (see sht A13 for details)
- Door tags (see sht A14 for details)
- Column grid lines, coordinate with structural drawings
- 001 — Room Number
- f.d. — floor drain – coordinate quantity and location with plumbing drawings and provide foundation or footing sleeves as required.
- floor mounted toilet by american standard or approved equal. see toilet rm notes on sheet A8
- wall-hung lavatory by american standard or approved equal. see toilet rm notes on sheet A8. Provide wall stud blocking as required. (typ)
- Storefront tag – refer to sheet A7 for storefront elevations
- illuminated exit sign. refer to electrical drawings for additional information

WALL LEGEND

- Partition type tag — Dim. to Centerline
- non rated Gwb and steel stud partition – (see wall and partition types-sht A12-for wall assembly)
- 1 hr rated Gwb and steel stud partition – (see wall and partition types-sht A12-for wall assembly)
- 2 hr rated Gwb and steel stud partition – (see wall and partition types-sht A12-for wall assembly)
- furred-out concrete fnd wall – coordinate with structural plans (see wall and partition types-sht A12-for wall assembly)

COPYRIGHT

STAIR NOTE:

1. Contractor shall submit to the Office of the Architect for review and approval, fabrication and fasteners (location, type and spacing), stiffeners, connections, etc, as needed for the proper erection, shop drawings of all stairs and stair railing. Railings to be selected by owner and approved by architect.Shop drawings shall detail all member sizes, spacing, position, locate permanent and temporary bracing, load conditions and design calculations relative to connections, fastening devices and anchorage to structural steel. Contractor shall also include necessary engineering data indicating all as well as size and gage of members. Calculations and drawings must be prepared by a Structural Engineer licensed in the State of New York, and shall be signed and sealed by this Engineer.
2. Concrete filled steel pan stairs. Contractor to provide shop drawings to architects office for review and approval prior to fabrication. Shop drawings to include railing mounting detail
3. Provide 34" high , 1 ½" dia. wall railing on wall side of stairs, return to wall. Railing material, style, and color to be selected by owner and approved by architect.
4. Min. tread width to be 11" and max. riser height to be 7" high.
5. Refer to barrier free detail sheet for additional information regarding railing extensions, railing mounting height, tread nosing detail and etc. All stair to comply with ADA requirements.
6. Concrete steps to receive " non-slip and seal by Grip Guard non slip" or approved equal. Note: all floor surfaces to meet slip resistance coefficient as specified by American standard national institute.

ELEVATOR NOTES:

1. Provide Ottis Elevator, model LVMT2100 passenger elevators with simplex operation – or approved equal.
1. Elevators to be filed under separate application
2. General contractor to submit shop drawings to architects office for review and approval.
3. General contractor to verify elevator pit size with elevator manufacture prior to commencement of foundation work.
4. All interior elevator finishes including carpet and panels are as per owner and approved by architect.
5. General contractor to install elevator as per NYC elevator code including all fire recall and smoke detector requirements.
6. General contractor is responsible to coordinate with elevator manufacture for any additional structural steel supports required for elevator components. Submit requirement for architects office for review and approval.
7. See specifications on sheet A15

FINISHES

1. General contractor to provide room finish schedule as coordinated w/ owner to office of architect for review & approval prior to submitting bids & or prior to commencement of work. Schedule shall indicate finish & substrate material for all ceilings, walls, base & floors and thresholds for all rooms and / or spaces all to be ADA compliment .
2. Prior to painting, Contractor shall inspect all surfaces to ensure they are in proper condition to meet manufacturers specifications.. If they do not meet the guidelines set forth, the Contractor shall prepare the surfaces making sure they meet the standards.
3. Provide "Johnsonite" floor transition piece as required. Submit cut sheets to architects office for review and approval.
4. All paints to be factory mixed. and primers to be tinted to exact shade of overcoat.
5. All switch plates and receptacle plates to match corresponding wall color/wall cover unless otherwise noted and to be selected by owner and approved by architect. Submit cut sheets for approval.
6. Door frames to match corresponding wall color except where noted.
7. All metal bucks and convectors shall receive three (3) coats of paint– one (1) prime coat and two (2) finish coats of semigloss except where otherwise noted.
8. Drywall construction shall receive three (3) coats of paint– one (1) prime sealer coat and two (2) finish coats of eggshell except where otherwise noted.
9. CMU construction shall receive three (3) coats of paint– one (1) prime sealer coat and two (2) finish coats of epoxy except where otherwise noted.
10. Walls shall receive base as selected by owner and approved by architect. Base shall be installed in a workmanlike manner properly adhered to the wall surface.
11. All finishes (wall, floors, and ceilings) as well as furnishings to comply with New York City codes and regulations for flame spread. Any deviation shall be brought to the attention of the Architect prior to purchase and installation.
12. All ceramic tiles to be by "Dal-tile" or approved equal. Bathrooms/lavatories to receive 18x18 ceramic floor tiles and 12x12 ceramic tiles for walls (full height) and ceramic base tile. (Refer to typical toilet room elevations for additional information). Janitors closet shall receive 18x18 ceramic floor tiles and 12x12 wall tiles only on 3 walls adjacent to sink. Other wall to be painted. Tile style to be selected by owner and approved by architect. All floor tiles to meet min. requirement for non-slip surface as per ANSI. Submit samples to architects office for approval.
13. All 90 degree wall corners to receive protective wall guards by "WALL PROTEX" or approved equal.
14. Room finishes for floors, base and walls are indicated on floor plans for each individual room as indicated below:

007		
VT	VB	P1

ROOM NUMBER
WALL FINISH
WALL BASE
FLOOR FINISH

(all finishes as specified or approved equal)

Wood floor finish – by "Armtico international"

Carpet – heavy duty , commercial grade by " Pawling corporation"

Ceramic tile by Daltile or approved equal see finish note # 12

Ceramic base tile by Daltile or approved equal see finish note # 12

VW	Vinyl wall covering by " Wolf Gordon"
P	Paint – by Benjamin moore
VB	Vinyl base, cove
CC	Carpet Cove base
EP	Epoxy concrete floor sealer.

15. Refer to drawing A12 for typical toilet room elevations

BUILDING 'B'

No.	Revisions	Date
1	Issued for Client Review	12/22/2011
2	Issued paperwork	01/09/2012
3	Answered DoB obj.	04/06/2012
4	For estimating only	09/13/2012
5	Issued for DoB appr	10/22/2012
6	Adjusted stair enclosure	1/16/2012

DOB Examiner stamp:

DOB Approval:

B-Scan job sticker:

The architect shall not have control or charge of and shall not be responsible for construction means, methods, deviations, techniques, sequences, or procedures, or for safety precautions and programs in connection with the work, for the acts or omissions of the contractor, subcontractors or any other persons performing any of the work, or for the failure of any of them to carry out the work in accordance with the contract documents. Always use dimensions as shown. Drawings are not to be scaled.

rampulla associates architects, l.l.p.
155 3rd street S.I., N.Y., 10306
•718 987-1310 • fax 718-987-1565
www.rampulla.net

project title :
PROPOSED WOODROW SHOPPING CENTER
1243 WOODROW ROAD
STATEN ISLAND, NEW YORK

BUILDING B

drawing title :
CELLAR PLAN

seal & signature

date:	7.22.11
project #:	10009
drawing by:	RD
chk by:	RD
dwg #:	A-003.00
file #:	

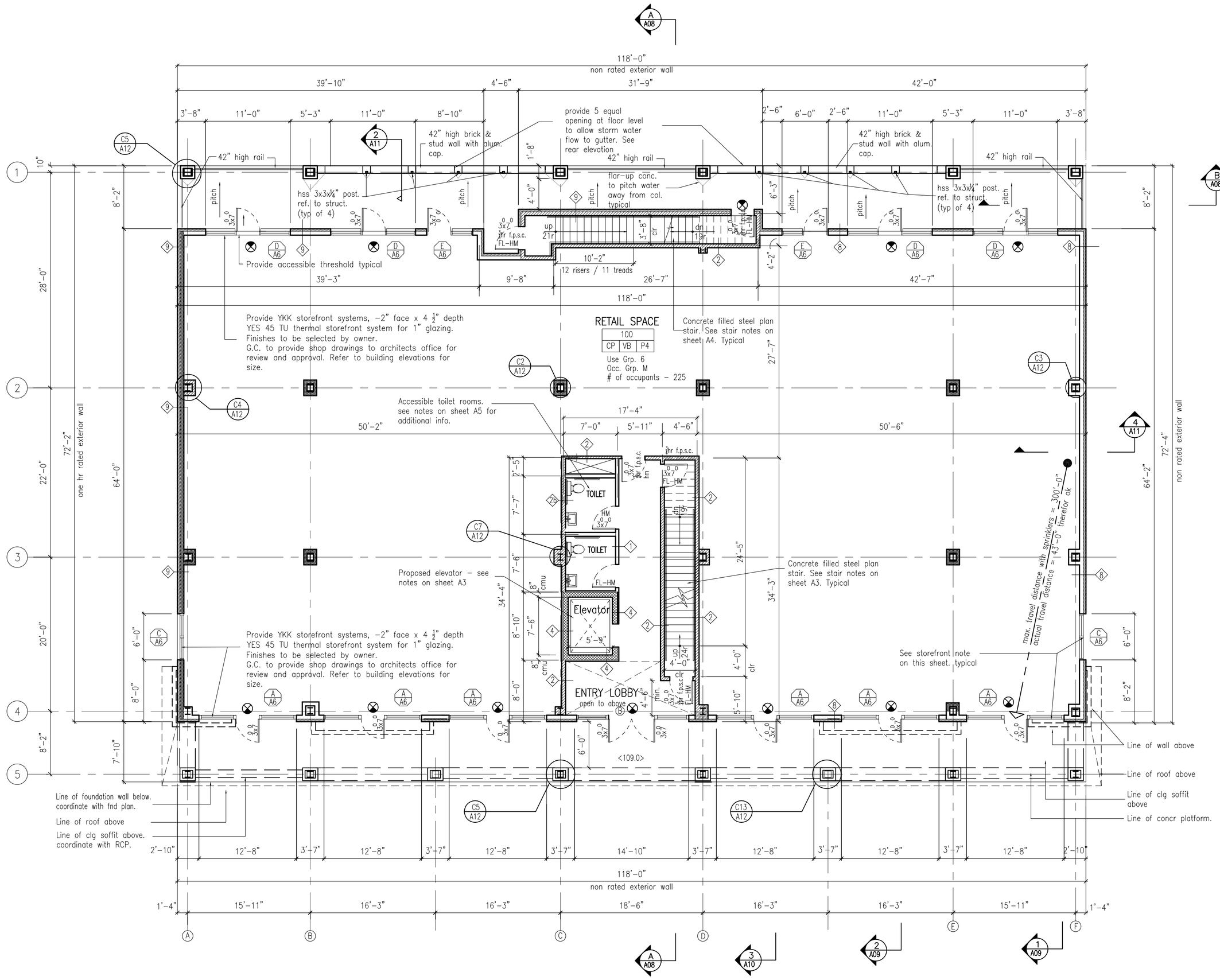

FIRST FLOOR PLAN
SCALE: ⅛"=1'-0"

STOREFRONT NOTE:
1. Provide YKK storefront systems, -2" face x 4 ½" depth YES 45 TU thermal storefront system for 1" glazing with an anodized finish (aanna 612) of approved equal. G.C. to provide shop drawings to architects office for review and approval. Refer to building elevations for size.

OCCUPANT LOAD FOR 1ST FLR RETAIL SPACE
As per table 1004.1.2, max floor area allowance per occupant - 6,747 sf (gross) / 30 = 225
total 1st flr occupants = 225 persons

OCCUPANT LOAD FOR 2nd FLR OFFICE SPACE
As per table 1004.1.2, max floor area allowance per occupant - 6536 sf (gross) / 100 = 65
total 2nd flr occupants = 65 persons

EGRESS WIDTH CALCULATION FOR STAIRS
As per table table 1005.1 stairway inches per occupant = 0.3 x 48" stair width = 160" max. occupant load per stairs.
2 stair provide = 160 x 2 = 320
occupant max > 225 actual therefor ok

EGRESS WIDTH CALCULATION FOR DOOR
As per table table 1005.1 DOORWAY inches per occupant = 0.2 x 36" stair width = 180" max. occupant load per 36" door

PLUMBING CALCULATIONS
As per table table 403.1 of the NYC plumbing code. plumbing fixtures are required as follows;
1st floor - retail space - 225 occupants
water closets = 1 per 500 occ. for each sex. therefore 1 water closet for each sex required.
lav's - 1 per 750 occ for each sex. therefore 1 provide per sex
1 service sink required/ 1 provide
2nd floor - business space - as per table 403.1, footnote f, calculations are based on 1 person per 125 sf
5625sf (net)/ 125 = 45 persons
water closets - 2 required for each sex / 2 provided
lav's - 2 required for each each sex / 2 provided
1 service sink required / 1 provided

GENERAL NOTES:

1. All contractors to visit job site and become familiar with the existing conditions before submitting bids and/or proceeding with any work.
2. Contractor shall provide a list of all items and equipment that will not be installed,
3. delivered, or functioning before the scheduled tenant move in date. The list should also include when the work shall be completed and what temporary measures he intends to take to compensate for the delays. Any costs for known delays should be part of the original bid and the list should be part of the contractors bid.
4. Contractor shall provide a list of all his subcontractors and schedule of work tasks and critical dates to meet the final completion date, including the punch list to the architect, landlord and tenant before construction or the subcontractor is put under contract.
5. Contractor shall schedule the punch list to take place a minimum of four (4) working days before the schedule tenant occupancy date. This will allow for furniture and phone installation, contractor shall provide notification to the architect and landlord when the punch list items have been completed or what items remain and why. Any work required after the tenants move in shall be completed after tenants working day and at no additional cost. Contractor to coordinate work with tenant and to protect and/or move any tenant items and furniture. All punch list items must be completed within 30 days of the punch list date.
6. All dimensions are from centerline of partition. Contractor shall coordinate wall paneling thickness and support system with supplier and locate GYB wall accordingly. Coordinate any dimension conflicts or problems with architect. Dimensions at file alcoves, millwork, wood paneling, floor and ceiling patterns and corridors are always hold dimensions. In no cases shall dimensions be scaled from drawings.
7. Contractor shall provide non-combustible blocking in wall for all wall hung items including (furniture items NIC) Coordinate with vendor. Coordinate all work required for mechanical/electrical items.
8. Measurement and Payment: Work shall not proceed by contractor in which he expects additional compensation beyond the written contract without written authorization from tenant and landlord. Failure to obtain such authorization shall invalidate any claim for additional compensation.
9. The intent of the contract documents is to allow for the performance of the work. Every item necessarily required may not be specifically mentioned or shown. Unless expressly stated, all systems and equipment shall be completed and appropriately operable. Furnish and install all specified and appropriate items, and all incidental, accessory, and other items not specified but required for a complete and finished assembly.
10. No work defective in workmanship or quality or deficient in any requirements of the contract documents will be acceptable despite the architect's failure to discover or point out defects or deficiencies during construction. Defective work revealed within the time required by guarantees shall be replaced by work conforming with the intent of the contract. No payment either partial or final, shall be construed as an acceptance of defective work or improper materials.
11. Patch and repair all fireproofing damage incurred during construction.
12. It is intended that the contractor provide a complete job and any omissions in these notes or in the outline of work shall not be construed as relieving the contractor of such responsibilities implied by scope of work except for items specifically notes.
13. Should any portion of the contract documents prove to be, for whatever reasons, unenforceable, such unenforceability shall not extend to the remainder of the contract nor shall it void any other provisions of the contract.
14. Throughout the duration of the project refrain from actions that could lead to the filing of claims of lien by subcontractors, suppliers of materials, labor, service, equipment or any other individual or company so entitled under governing laws and regulations unless reasonable and justifiable cause can be shown. Approval for payment shall be contingent upon the contractor's obtaining and furnishing to the architect signed releases from such individuals or companies.
15. The contractor is responsible for checking contract documents, field conditions and dimensions for accuracy and confirming that work is buildable as shown before proceeding with construction. If there are any questions regarding these or other coordination issues, the contractor shall submit them, in writing, to the architect and is responsible for obtaining a written clarification from the architect before proceeding with work in question, or related work.
16. Execute work in accordance with any and all applicable local, state, federal codes, manufacturer's recommendations, trade and reference standards including but not limited to: UBC, seismic codes, NEC, NFPA, ASMC, UMC, latest enforced editions.
17. Do not scale drawings; dimensions shall govern. Details shall govern over plans and elevations. Large scale details shall govern over small scale details.
18. Clarify all discrepancies relative to construction documents, specifications, and field conditions prior to submitting bids and commencing work.
19. There shall be no substitution of materials where a manufacturer is specified. Where the term "or equal" is issued, the architect alone shall determine equality based upon information submitted by the contractor.
20. The contractor shall be responsible for the distribution of drawings to all trades under his jurisdiction.
21. Do not proceed with any work requiring additional compensation beyond the contract amount without written authorization from the owner. Failure to obtain authorization shall invalidate any claim for extra compensation.
22. Proof of certificate of all necessary insurance shall be filed with landlord/tenant to indemnify and hold harmless the owner, landlord, tenant, architect and agents thereof from damages and losses resulting from contractors execution of work.
23. Payment: Work shall not proceed by contractor or supplier in which he expects additional compensation beyond the written contract without written authorization from the tenant, construction manager and architect.
24. Design: Work shall not proceed by contractor or supplier that changes the design intent without the written authorization from the tenant, construction management and architect.
25. Contractor shall not allow debris to accumulate, remove and dispose of all debris caused by demolition/construction - leaving the construction site and building broom clean. Failure to do so will result in a back charge to the contractor, with the work completed by others.
26. When necessary, the contractor shall provide and install protective covering(s) for surfaces that are subject to damage of any type.
27. This building is a smoke free environment. No smoking is allowed in the building.
28. Consumption or possession of alcoholic beverages and/or controlled substances in the building is prohibited. Violators will be removed from property.
29. No space other than the construction site shall be provided to the contractor for storage, staging, finishing or an office unless coordinated with the landlord.
30. Coordinate any construction needs for power, phone, lighting, etc. with landlord prior to bidding.
31. Where pipes, conduits or low tension wiring penetrates a fire-rated enclosure, such as wall or slab, the space around such penetration shall not exceed ½" and shall be packed solid with mineral wool or equal and then closed off with a tight fitting escutcheon or equal on both sides of the rated enclosure to insure full fire-rating in compliance with the building code.
32. All finish surfaces shall have a flame spread rating equal to or better than that required by the building.

SHOP DRAWINGS

1. The contractor shall first review, add required field dimensions, stamp and then forward all shop drawings and samples to architect for approval. All finishes, millwork, exposed items or equipment, doors, frames and hardware, etc. must be submitted for review and written approval.
2. Prior to the start of construction of any items and or the ordering of any and all finish materials, the contractor shall submit to the designer, with an accompanying transmittal, one (1) original and one (4) copies of required shop drawings and no fewer than three (3) 3" x 3" samples of the item or from the dye lot of the finish material to be installed, for the review and written approval of the designer. The contractor must contact the architect prior to installation if the item does not match the approved sample.
3. No substitutions will be allowed without prior written approval.
4. Any changes in the shop drawings from design or specifications indicated in this set must be noted to the architect for approval. Any item clearly different than the design indicated in this set may be rejected in the field at suppliers cost even with approved shop drawings.
5. Required shop drawings as specified on plans.

No.	Revisions	Date
1	Issued for Client Review	12/22/2011
2	Issued paperwork	01/09/2012
3	Answered DoB obj.	04/06/2012
4	For estimating only	09/13/2012
5	Issued for DoB appr	10/22/2012
6	Adjusted stair enclosure	1/16/2012

DOB Examiner stamp:

DOB Approval:

B-Scan job sticker:

The architect shall not have control or charge of and shall not be responsible for construction means, methods, deviations, techniques, sequences, or procedures, or for safety precautions and programs in connection with the work, for the acts or omissions of the contractor, subcontractors or any other persons performing any of the work, or for the failure of any of them to carry out the work in accordance with the contract documents. Always use dimensions as shown. Drawings are not to be scaled.

rampulla associates architects, l.l.p.
155 3rd street S.I., N.Y., 10306
• 718 987-1310 • fax 718-987-1565
www.rampulla.net

project title :
PROPOSED WOODROW SHOPPING CENTER
1243 WOODROW ROAD
STATEN ISLAND, NEW YORK

BUILDING B

drawing title :
FIRST FLOOR PLAN

seal & signature

date:	7.22.11
project #:	10009
drawing by:	RD
chk by:	RD
dwg #:	A-004.00
file #:	

COPYRIGHT

BUILDING B

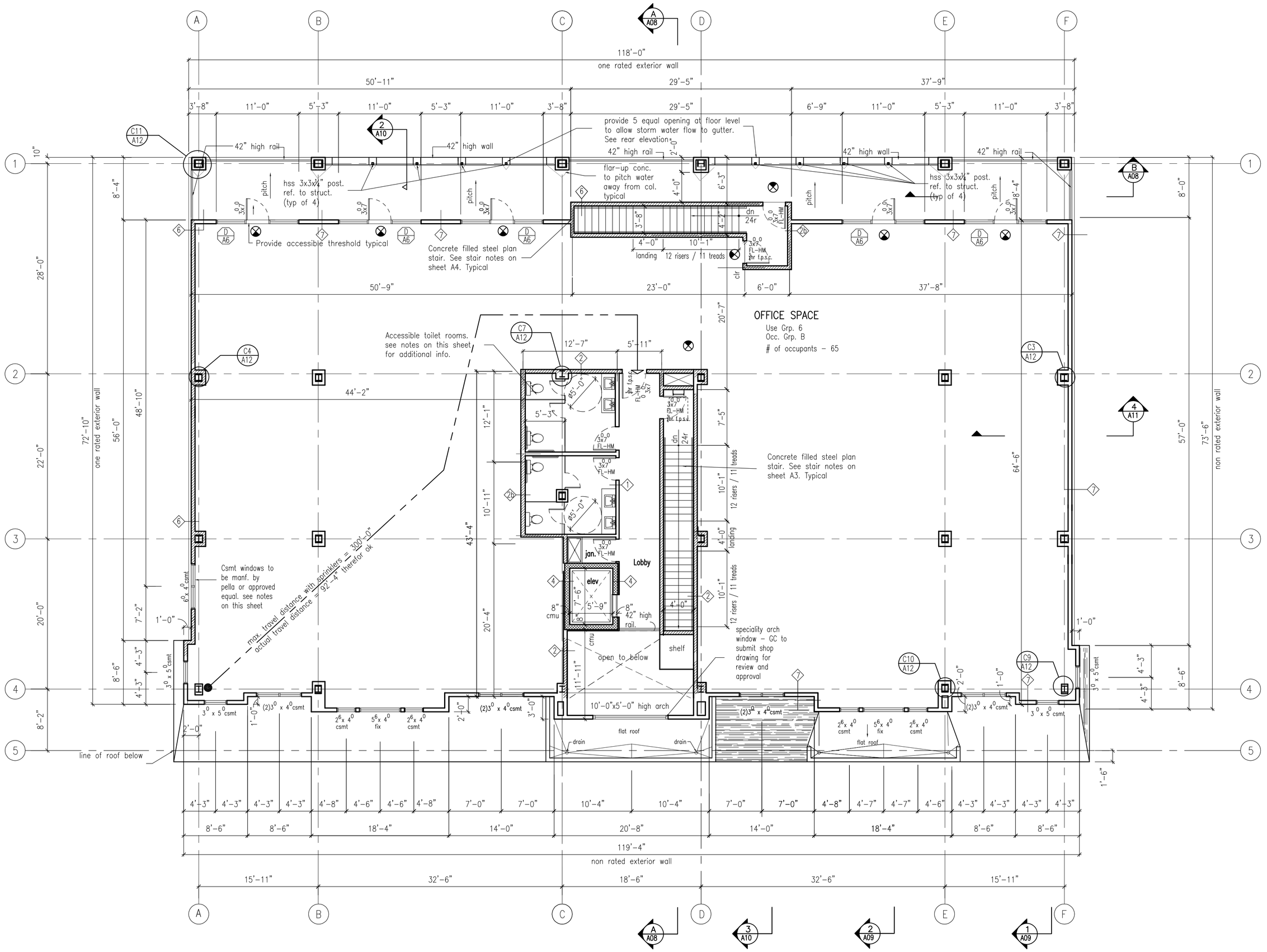

SECOND FLOOR PLAN

SCALE: $\frac{1}{8}$"=1'-0"

GENERAL TOILET ROOM NOTES:

1. All toilet room accessories are to be selected by owner and approved by architect. See below for acceptable manufactures. General contractor to provide cut sheets and shop drawings to office of architect for review and approval. (typical)
2. Refer to manufactures cut sheet for mounting heights for barrier-free design. (typ)
3. All colors and finishes to be selected by owner and approved by architect.
4. All toilet rooms to include but not limited to; toilet fixtures, lav's, partitions , mirrors, grab bars, soap dispenser, hand dryer, clothing hook, and door stops. Provide cut sheets to architects office for review and approval
5. All finishes to be selected by owner and approved by architect. General contractor to provide ceramic tile samples include trim and base tile, paint samples and lighting fixture cut sheet.
6. All finishes in accessible toilet rooms to be ADA compliant.

Acceptable manufactures for various components are:(or approved equal)
- partitions : knickerbocker
- toilet and lav : american standard
- accessories: bobrick
- hand dryers: xlerator
- ceramic tile: daletile

WINDOW SPECIFICATIONS:

ALL WINDOWS MANUFACTURED BY "PELLA WINDOWS & DOORS".

CONTACT: NATHAN SANTLOFER
TELEPHONE: 718-477-2270
WEBSITE: WWW.PELLA.COM
SHOWROOM: 1424 RICHMOND AVENUE
STATEN ISLAND, NEW YORK 10314

NOTES:

1. General contractor to provide shop drawings to architects office for review and approval.
2. All windows to be, Designer series with triple-pane glazing, unless otherwise noted with internal shades. Color to be selected by owner and approved by architect.
3. All windows to be factory mulled and be installed in accordance with manufactures specification and coordinated with shop drawings.
4. All window flashing to be installed as per manufactures specifications.
5. All windows to be reinforced as required by manufacture. Shop drawings to included all reinforcing required, anchoring details and all components of windows
6. All hardware to be selected by owner and approved by architect.
7. General contractor to coordinate with shop drawings to provide all rough opening.
8. Prior to bidding, contact for NATHAN SANTLOFER 718.477.2270 additional information regarding window/frame/glass type.

COPYRIGHT

No.	Revisions	Date
1	Issued for Client Review	12/22/2011
2	Issued paperwork	01/09/2012
3	Answered DoB obj.	04/06/2012
4	For estimating only	09/13/2012
5	Issued for DoB appr	10/22/2012
6	Adjusted stair enclosure	1/16/2012

DOB Examiner stamp:

DOB Approval:

B-Scan job sticker:

The architect shall not have control or charge of and shall not be responsible for construction means, methods, deviations, techniques, sequences, or procedures, or for safety precautions and programs in connection with the work, for the acts or omissions of the contractor, subcontractors or any other persons performing any of the work, or for the failure of any of them to carry out the work in accordance with the contract documents. Always use dimensions as shown. Drawings are not to be scaled.

rampulla associates architects, l.l.p.
155 3rd street S.I., N.Y., 10306
• 718 987-1310 • fax 718-987-1565
www.rampulla.net

project title :
PROPOSED WOODROW SHOPPING CENTER
1243 WOODROW ROAD
STATEN ISLAND, NEW YORK

BUILDING B

drawing title :
SECOND FLOOR PLAN

seal & signature

date:	7.22.11
project #:	10009
drawing by:	RD
chk by:	RD
dwg #:	A-005.00
file #:	

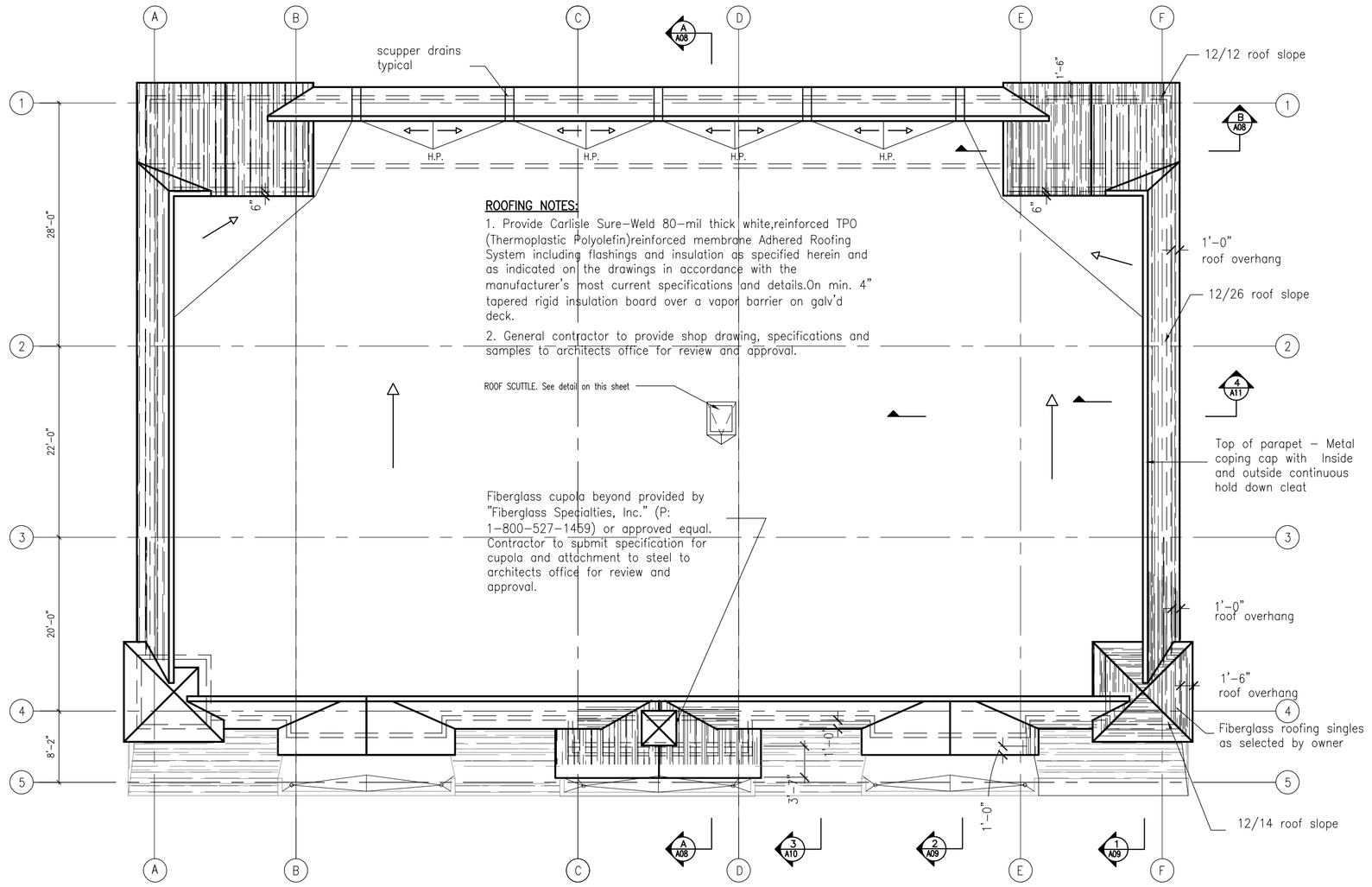

ROOFING NOTES:

1. Provide Carlisle Sure-Weld 80-mil thick white,reinforced TPO (Thermoplastic Polyolefin)reinforced membrane Adhered Roofing System including flashings and insulation as specified herein and as indicated on the drawings in accordance with the manufacturer's most current specifications and details.On min. 4" tapered rigid insulation board over a vapor barrier on galv'd deck.
2. General contractor to provide shop drawing, specifications and samples to architects office for review and approval.

ROOF PLAN
SCALE: 3/32=1'-0"

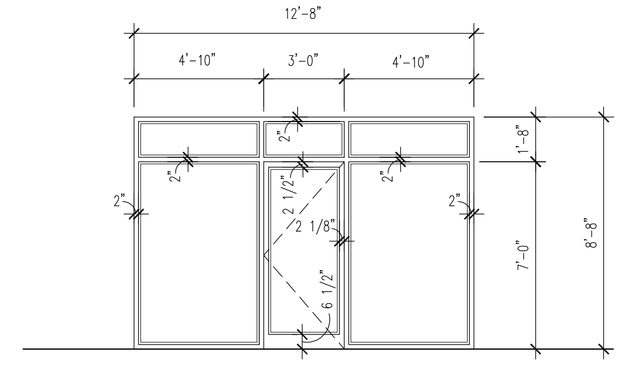

A/A6 ELEVATION A
SCALE: 1/4"=1'-0"

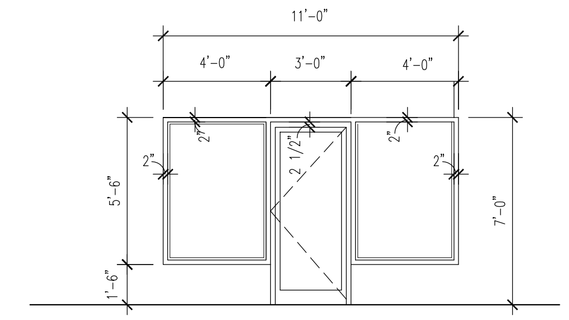

D/A6 ELEVATION A
SCALE: 1/4"=1'-0"

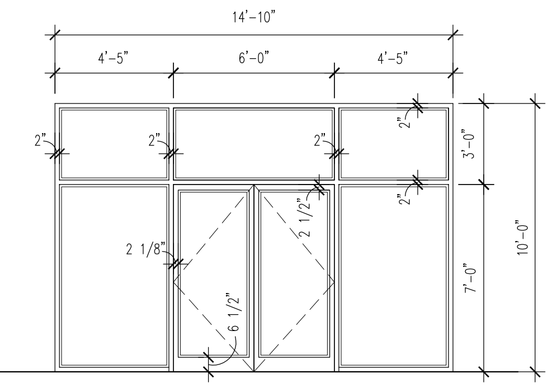

B/A6 ELEVATION B
SCALE: 1/4"=1'-0"

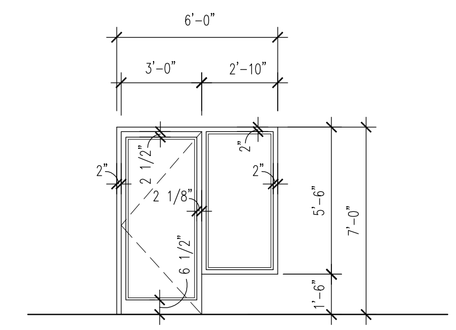

E/A6 ELEVATION E
SCALE: 1/4"=1'-0"

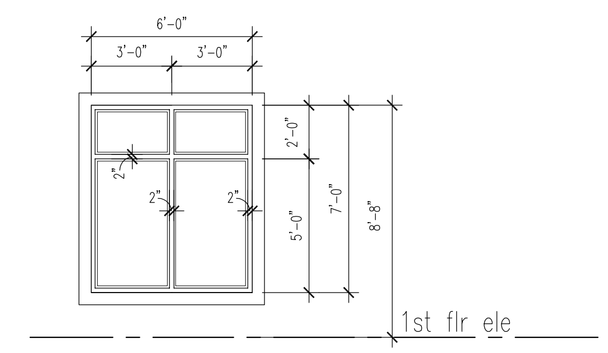

C/A6 ELEVATION C
SCALE: 1/4"=1'-0"

STOREFRONT NOTE:

1. Provide YKK storefront systems, -2" face x 4 1/2" depth YES 45 TU thermal storefront system for 1" glazing with an anodized finish (ganna 612) of approved equal. G.C. to provide shop drawings to architects office for review and approval. Refer to building elevations for size.
2. Glass in insulating units that are within 18" of floor/grade, or as noted in schedule, shall be fully tempered.
3. Clerestory glass to be \" thick fully tempered Herculite lites.
4. Edges of glass assemblies shall be designed and constructed to work with structural silicone sealant.
5. Contractor shall submit to the office of the Architect the following items for review and approval prior to ordering and/or manufacture of any components:
   - Submit manufacturers samples of proprietary painted finishes.
   - Submit manufacturers specifications and/or product data for all components.
   - Submit shop drawings showing layout, profiles, and product components, including anchorage, accessories, and finish colors.
   - Submit verification samples of glass, and frames.

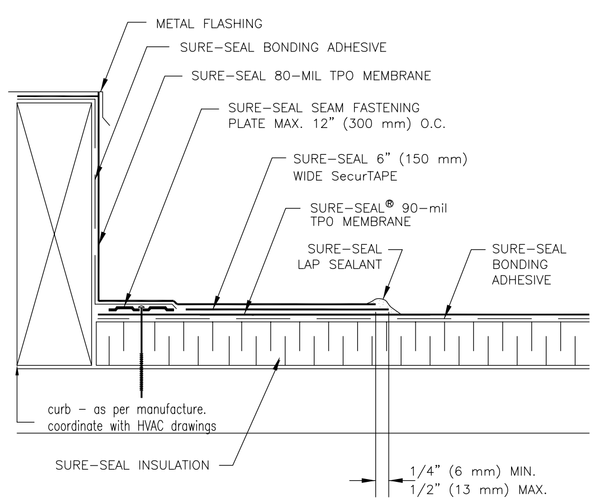

Curb flashing detail
Scale:

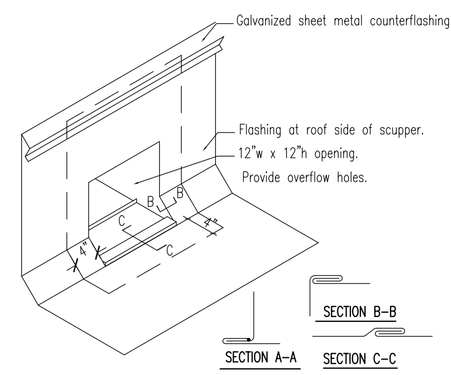

SCUPPER DETAIL
Scale: 1" = 1'-0"

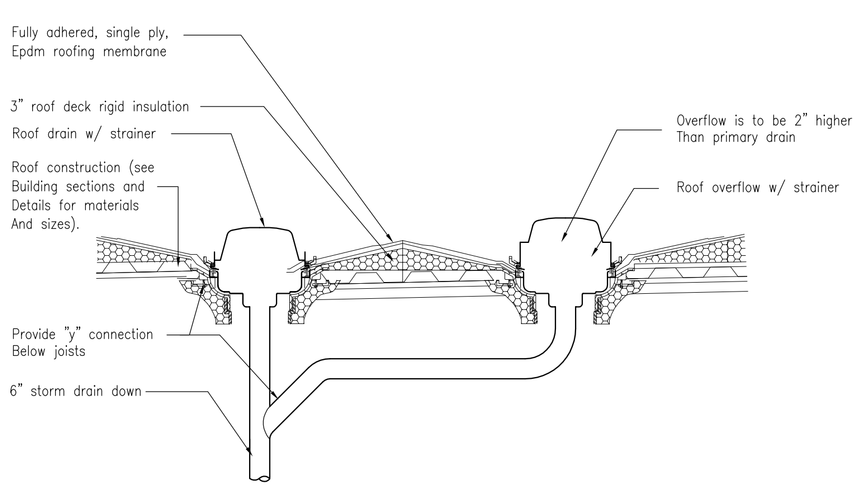

ROOF DRAIN AND OVERFLOW DETAIL
SCALE: 3/4" = 1'-0"

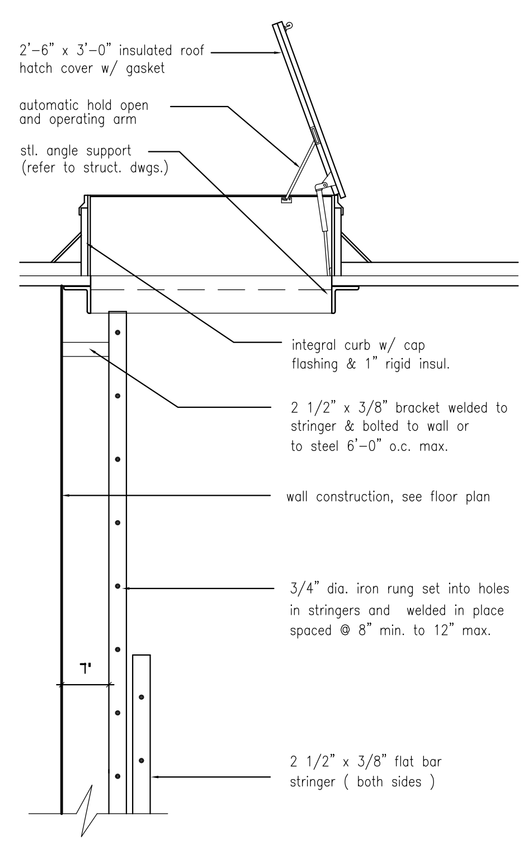

ROOF SCUTTLE AND RETRACTABLE LADDER DETAIL
SCALE: 3/4"= 1'-0"

COPYRIGHT

BUILDING B

No.	Revisions	Date
1	Issued for Client Review	12/22/2011
2	Issued paperwork	01/09/2012
3	Answered DoB obj.	04/06/2012
4	For estimating only	09/13/2012
5	Issued for DoB appr	10/22/2012
6	Adjusted stair enclosure	1/16/2012

DOB Examiner stamp:

DOB Approval:

B-Scan job sticker:

The architect shall not have control or charge of and shall not be responsible for construction means, methods, deviations, techniques, sequences, or procedures, or for safety precautions and programs in connection with the work, for the acts or omissions of the contractor, subcontractors or any other persons performing any of the work, or for the failure of any of them to carry out the work in accordance with the contract documents. Always use dimensions as shown. Drawings are not to be scaled.

rampulla associates architects, l.l.p.
155 3rd street S.I., N.Y., 10306
• 718 987-1310 • fax 718-987-1565
www.rampulla.net

project title :
PROPOSED WOODROW SHOPPING CENTER
1243 WOODROW ROAD
STATEN ISLAND, NEW YORK

BUILDING B

drawing title :
ROOF PLAN AND DETAILS

seal & signature

date:	7.22.11
project #:	10009
drawing by:	RD
chk by:	RD
dwg #:	A-006.00
file #:	

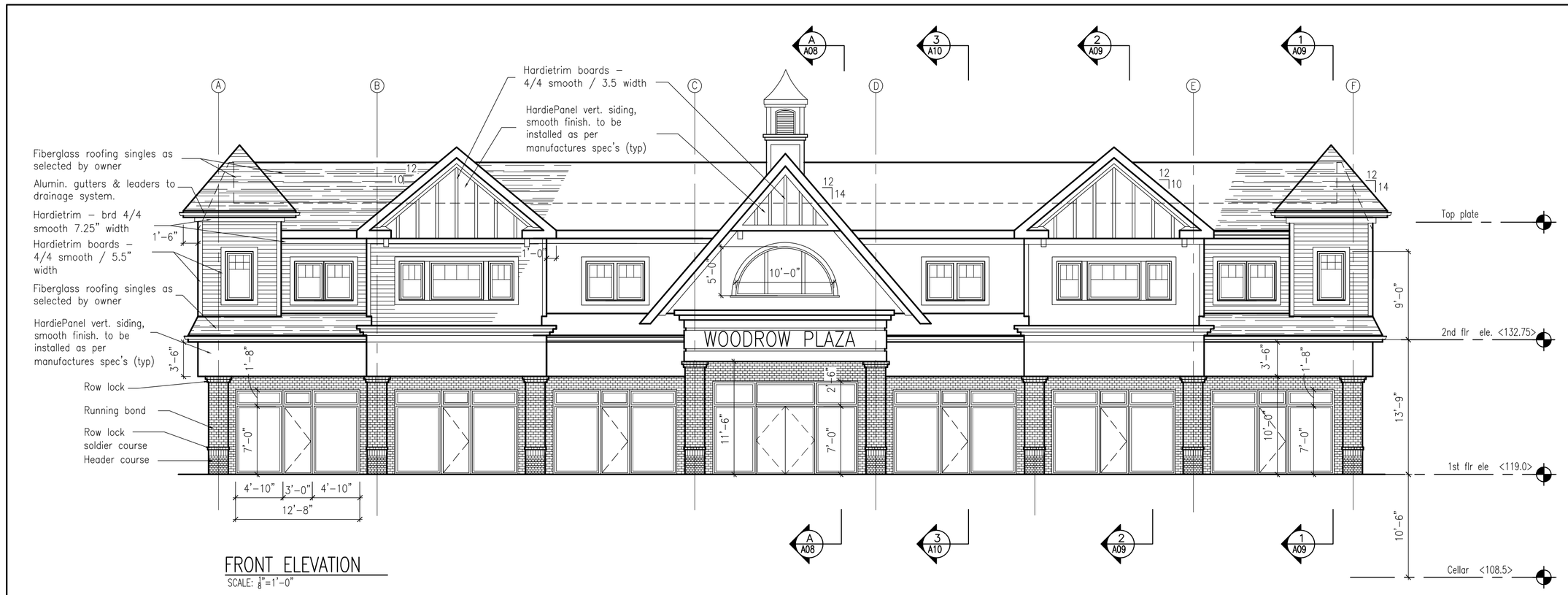

FRONT ELEVATION
SCALE: 1/8"=1'-0"

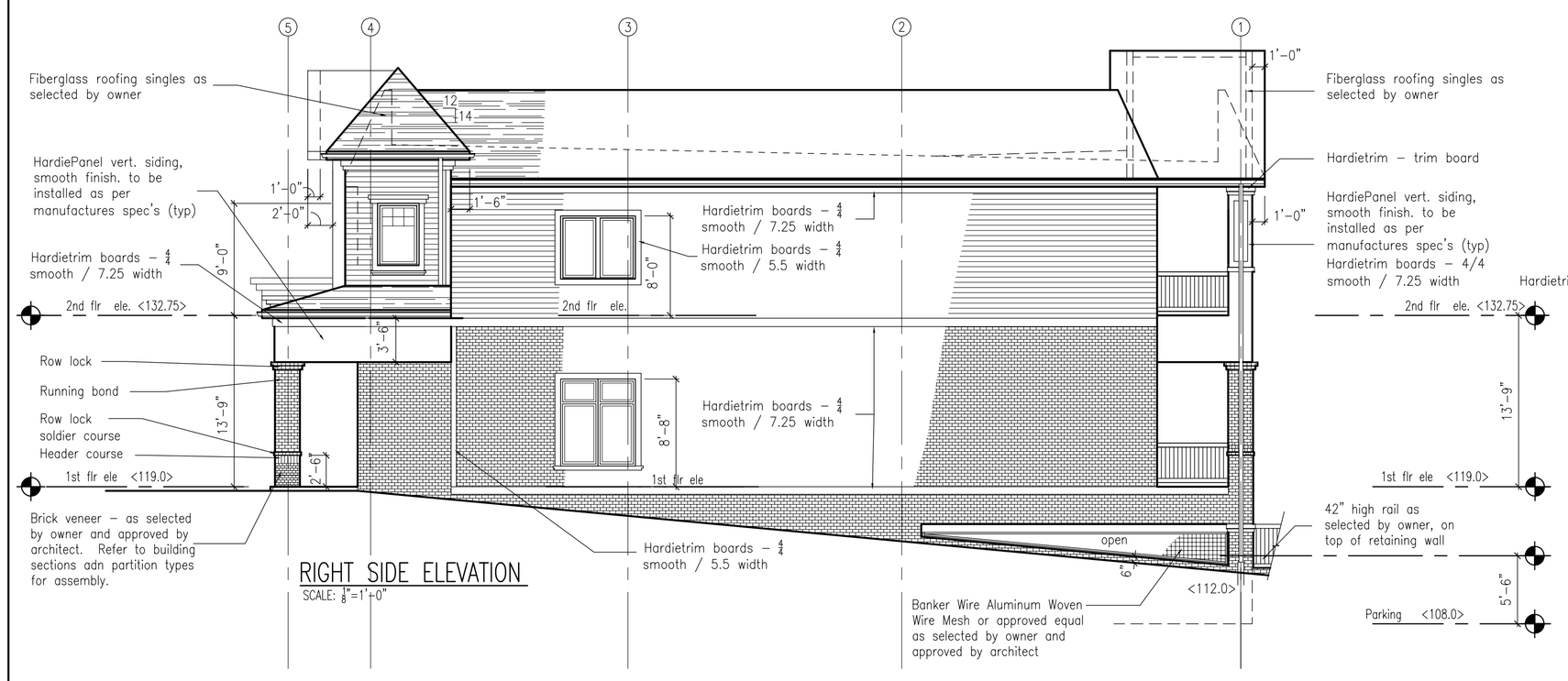

RIGHT SIDE ELEVATION
SCALE: 1/8"=1'-0"

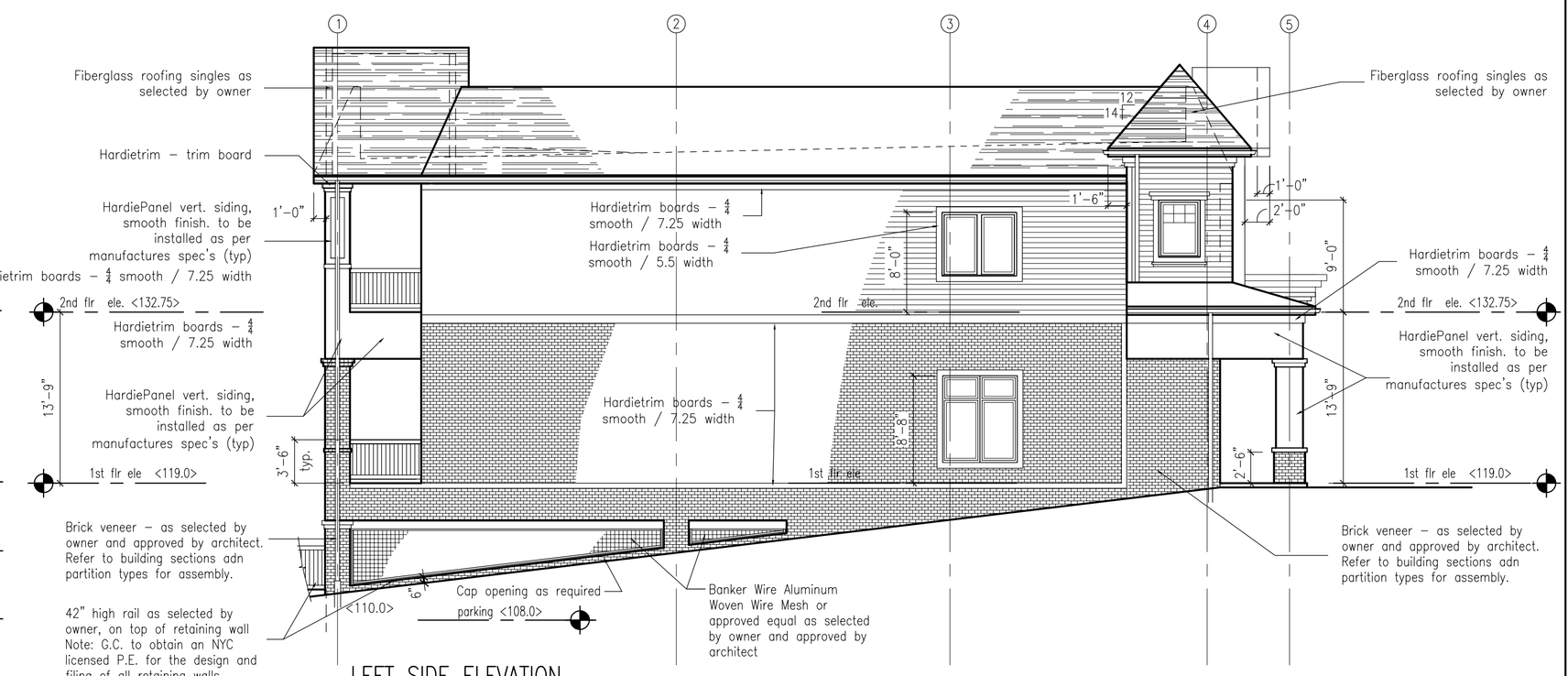

LEFT SIDE ELEVATION
SCALE: 1/8"=1'-0"

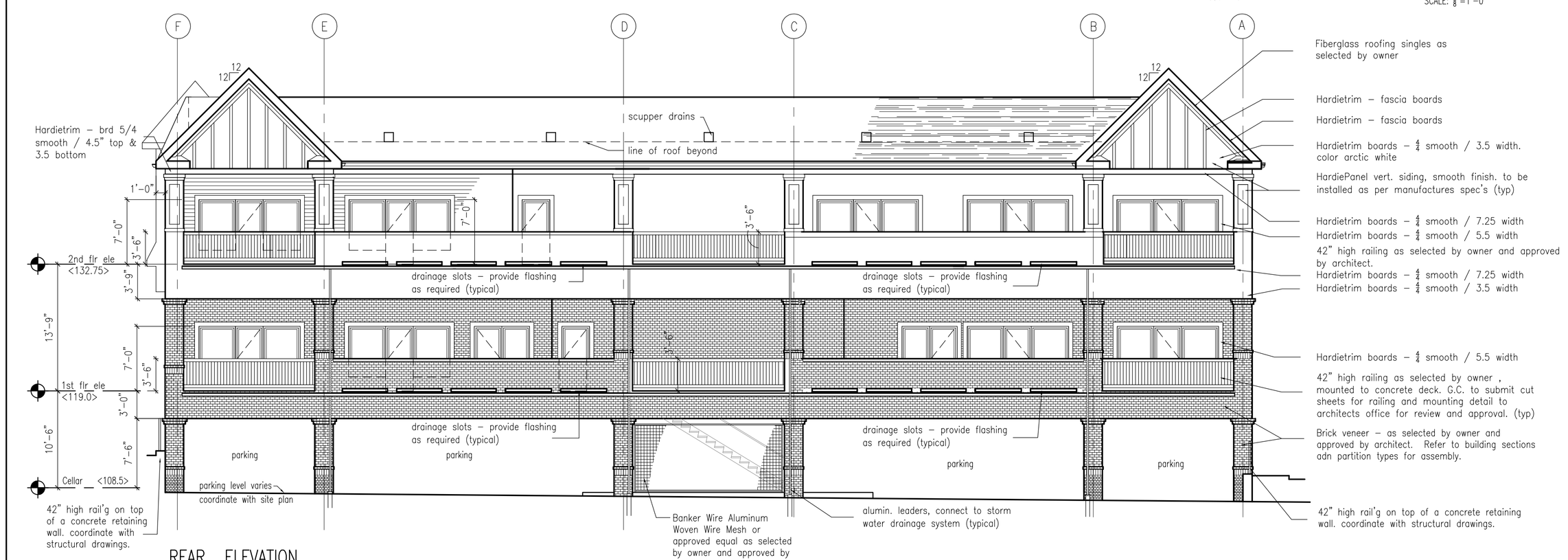

REAR ELEVATION
SCALE: 1/8"=1'-0"

COPYRIGHT

No.	Revisions	Date
1	Issued for Client Review	12/22/2011
2	Issued paperwork	01/09/2012
3	Answered DoB obj.	04/06/2012
4	For estimating only	09/13/2012
5	Issued for DoB appr	10/22/2012
6	Adjusted stair enclosure	1/16/2012

DOB Examiner stamp:

DOB Approval:

B-Scan job sticker:

The architect shall not have control or charge of and shall not be responsible for construction means, methods, deviations, techniques, sequences, or procedures, or for safety precautions and programs in connection with the work, for the acts or omissions of the contractor, subcontractors or any other persons performing any of the work, or for the failure of any of them to carry out the work in accordance with the contract documents. Always use dimensions as shown. Drawings are not to be scaled.

rampulla associates architects, l.l.p.
155 3rd street S.I., N.Y., 10306
• 718 987-1310 • fax 718-987-1565
www.rampulla.net

project title :
PROPOSED WOODROW SHOPPING CENTER
1243 WOODROW ROAD
STATEN ISLAND, NEW YORK

BUILDING B

drawing title :
BUILDING ELEVATIONS

seal & signature

date:	7.22.11
project #:	10009
drawing by:	RD
chk by:	RD
dwg #:	A-007.00
file #:	

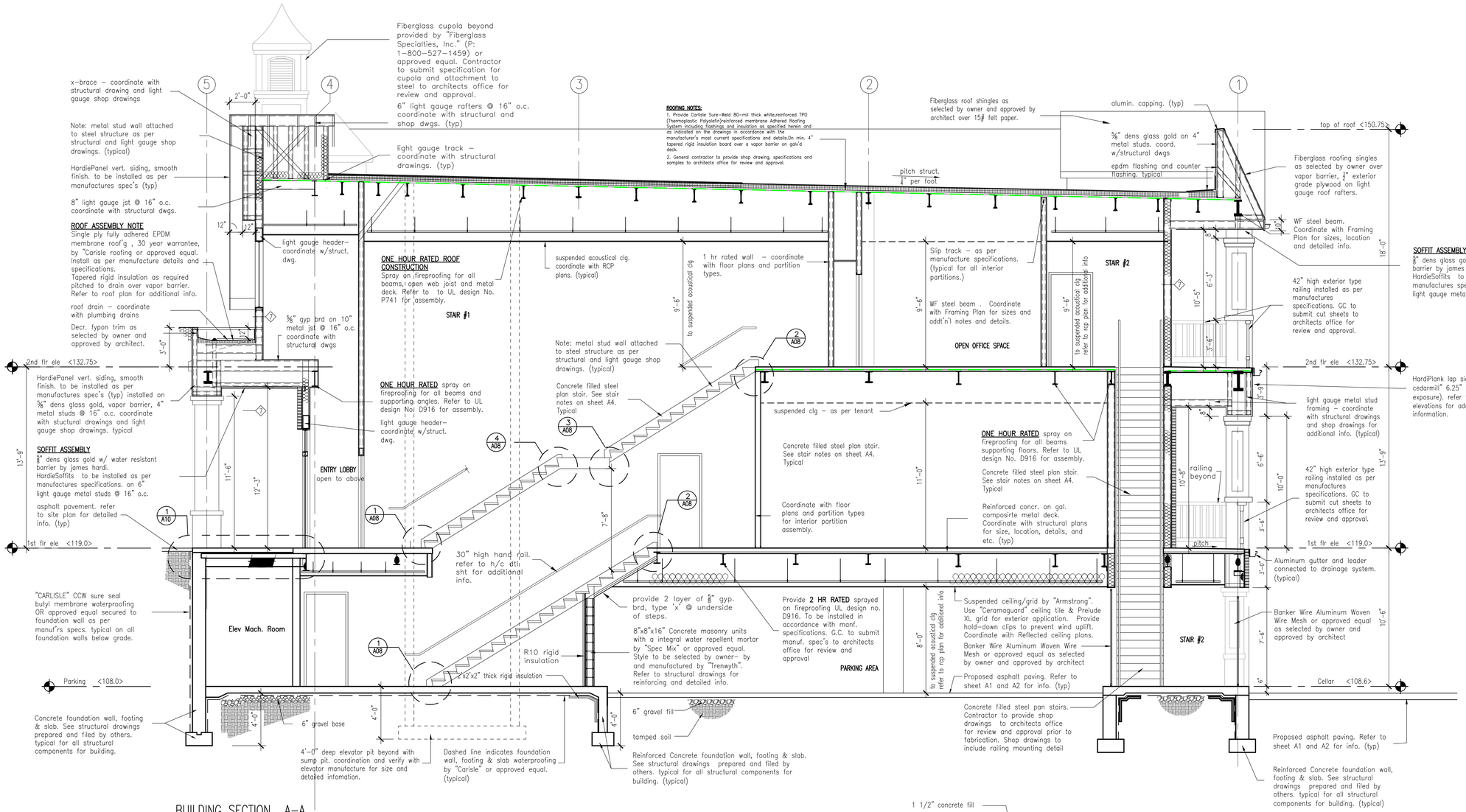

BUILDING SECTION A-A

METAL STAIRS

NOTE: FOR STAIR # 1, STAIR #2 – PROVIDE CONCRETE FILLED METAL PAN STAIR WITH NON-SLIP VINYL TREAD INSERTS AND PAINTED METAL RAIL AS PER OWNER.

PART 1 – GENERAL 1.1 SUMMARY A. Section Includes: 1. Metal Pan Stairs. 1.3 SYSTEM DESCRIPTION A. Design Requirements: Drawings are diagrammatic and are intended to establish basic dimension of units, sight lines, and profiles of units 1. Fabricator: Responsible for designing system, including necessary modifications to meet specified requirements and maintain visual design concepts.
2. Employ registered professional engineer, licensed to practice structural engineering in jurisdiction where Project is located, to engineer each component of stair system.
3. Employ registered professional engineer, licensed to practice structural engineering in jurisdiction where Project is located, to engineer each component of stair system which does not have sizes specified or indicated on Drawings.
4. Make modifications only to meet field conditions and ensure fitting of components.
5. Obtain Architect's approval of modifications and for connections to building elements at locations other than indicated on Drawings.
6. Provide concealed fastening wherever possible.
7. Attachment Considerations: Account for site peculiarities and expansion and contraction movements so there is no possibility of loosening, weakening and fracturing connection between units and building structure or between components themselves. B. Structural Requirements: 1. Live Load on Stairs and Platforms: 100 PSF at treads and platforms and 300 pounds square inches at center of tread. on area of 4 2. Maximum Allowable Deflection: L/360. C. Interface With Adjacent Systems: Coordinate with guardrails and handrails specified in Section 05520. 1.4 SUBMITTALS B. Product Data: Submit for primer. C. Shop Drawings: Indicate profiles, dimensions, connection attachments, reinforcing, anchorage, openings, size and type of fasteners, and accessories. 1. Stamp with seal and signature of professional engineer responsible for design. D. Changed Condition Drawings: Submit in accordance with Section 01330. E. Informational Submittals: Submit following packaged separately from other submittals:
1. Stair Reflections Design Data: Submit in accordance with Section 01330. 2. Certifications specified in Quality Assurance article. 1.5 QUALITY ASSURANCE A. Engineer Qualifications: Registered professional engineer licensed to practice structural engineering in jurisdiction where Project is located, with experience in design of metal stair systems. C. Welder Qualifications: AWS certified within past 12 months for each type of weld required. Maintain current certification for duration of Project. D. Regulatory Requirements: Conform to ADA Accessibility Guidelines for Buildings requirements are applicable for installing work for accessibility to handicapped. B. Fabricator Qualifications: Company specializing in fabricating work specified in this Section. E. Certifications: 1. Engineering certifications. 3. Certification that fabrication and installation comply with structural requirements listed this Section. PART 2 – PRODUCTS 2.1 MATERIALS A. Structural Steel Components: ASTM A36/A36M. B. Rolled Steel Shapes, Plates, and Bars: ASTM A6/A6M. for design loading. C. Steel Tubing: 1–1/4 inches NPS ASTM A53, Grade B, Schedule 40, or as required for D. Cold-Rolled Steel Sheet, Structural Quality: ASTM A611; grade as required for design loading. F. Hanger Rods: ASTM A575 or ASTM A576, Carbon Steel Bar, threaded full-length, E. Galvanized Steel Sheet: ASTM A653/A653M, G90; Quality SQ, Grade as required zinc coated. G. Flat Hangers: ASTM A6/A6M, zinc coated. design loading. H. Angle Hangers: Rolled steel shapes complying with ASTM A6/A6M, including angles with legs not less than 3 inch wide; formed with minimum 0.25 inch thick steel, zinc coated; with welded connections. I. Reinforced Concrete Fill: Provide normal-weight, ready-mixed concrete, minimum -day 3000 PSI compressive strength.
1. Welded Wire Fabric: Provide ASTM A185, 6 by 6 inches-W1.4 by W1.4, unless otherwise indicated.
2. Nonslip-Aggregate Finish: Provide dry shake-on non-slip aggregate, fused aluminum oxide grit or crushed emery or silica quartz, or blend thereof. J. Fasteners: Select fasteners for type, grade and class required. 2. Bolts and Nuts: Regular hexagon head type, ASTM A307, Grade A.
3. Lag Bolts: Square head type, FS FF-B-561. 4. Machine Screws: Cadmium plated steel, FS FF-S-92. 6. Plain Washers: Round, carbon steel, FS FF-W-92. 7. Masonry Anchorage Devices: Expansion shields, FS FF-S-325. 8. Toggle Bolts: Tumble-wing type, FS FF-B-588, type, class and style as required. 9. Lock Washers: Helical spring type carbon steel, FS FF-W-84.
K. Concrete Inserts: Threaded or wedge type; galvanized ferrous castings, either malleable iron, ASTM A47/A47M, or cast steel, ASTM A27/A27M. Provide bolts, washers and shims as required, hot-dip galvanized, ASTM A153. 2.2 SURFACE PREPARATION AND APPLICATION A. Steel Surfaces to be Primed: Dry and free of dirt, oils, rust, salt and other contaminants.
1. Blast-clean steel to SSPC SP-6 Commercial Grade for general use. B. Apply primers in accordance with manufacturer's instructions. 2.3 UNIVERSAL PRIMER A. Manufacturer's standard alkyd, lead free primer, capable of providing sound foundation for field applied top coats despite prolonged exposure. 1. Solids by Volume: 60 percent nominal.
2. VOC content: 2.9 pounds/gallon per EPA guidelines. 3. Dry film thickness: 2 to 3 mils per coat. 4. Maximum Allowable Dry Time: Four hours to touch; 24 hours to re-coat. 5. Compatible with finish paint system specified in 09960 and 09910. B. Acceptable Products: 1. Tnemec, Chem Prime Series 37H, Tnemec, Kansas City, MO. 2. Carboline Carbocoat 150, Carboline Company, St. Louis, MO. 3. Accepted Substitute in accordance with Section 01600. 2.4 GALVANIZING stair components before installation of masonry. C. Metal Pan Stair:
1. Metal Pan Risers, Subtreads, and Subplatforms: Shape metal pans for risers and subtreads to conform to configuration shown. Provide following minimum thicknesses of structural steel sheet for metal pans unless otherwise indicated. Increase thickness if required to support design loading. a. Risers and Subtreads: Minimum 14 gage. b. Subplatforms: Minimum 12 gage.
2. Form metal pans of cold-rolled steel sheet, structural quality, unless otherwise indicated.
3. Stringers: Fabricate from steel channels, ASTM A6/A6M of size to support design loading. Details: Based on channel with 1–1/2 inches wide flange. a. Stringer Anchors: Provide steel clip angles of size required to support design loading to anchor stringers to concrete substrates. Weld to stringers.
4. Metal Pan Risers, Subtreads: Directly weld to stringers; locate welds on side of metal pans concealed by concrete fill.
5. Metal Pan Subplatform: Provide subplatforms of configuration and construction indicated. a. Secure subplatform to platform framing members with welds. anchor stringers to concrete substrates. Weld to stringers. E. Platform Framing: Provide structural steel framing as required to support loads and comply with structural requirements. 2.7 FINISHES A. Use same manufacturer for primer and finish system. B. Surface Preparation: As required by coating manufacturer for surfaces, primers, and conditions of use.
1. Galvanized surfaces: Repair damaged surfaces to provide continuously coated surface.
2. Prime galvanized surfaces with Galvanizing Primer in shop. C. Interior Stairs: Universal primer.
PART 3 – EXECUTION 3.
1 EXAMINATION A. Examine conditions and proceed with Work in accordance with Section 01400. 3.2 PREPARATION A. Coordinate setting drawings, diagrams, templates and directions for installation of inserts and anchors, anchor bolts and miscellaneous items having integral anchors embedded in concrete and masonry.
1. Coordinate and furnish inserts and anchors set in concrete and masonry for installation of work.
2. Pre-assemble items in shop to greatest extent possible to minimize field splicing and assembly of units. Disassemble units only as necessary for shipping and handling. Mark units for reassembly and coordinated installation. 3.3 METAL STAIR INSTALLATION A. Provide anchorage devices, fasteners, hangers or struts where necessary for securing items to inplace construction; including threaded fasteners for concrete inserts, toggle bolts, through-bolts and connectors to comply with structural requirements.
1. Cut, drill and fit as required for installation of work. Set work in location, alignment and elevation, plumb and level, true and free of rack. Install per approved Shop Drawings.
2. Fit exposed connections to form tight hairline joints. Field-weld connections which cannot be shop-welded. Grind joints smooth and touch up shop primer coat.
3. Stringer Anchors: Anchor to concrete with concrete inserts of number and size to withstand loads.
10-01053.00/11-18-02 REV 04-02-03 05511-6 METAL STAIRS B. Reinforced Concrete Fill (FOR STAIR NUMBER 2 ONLY) : Provide with nonslip-aggregate finish in accordance with Section 03361. C. Leave miscellaneous metal items ready to receive finish, where applicable, per Section 09960 and ASTM A780. 3.4 ADJUST AND CLEAN A. Clean field welds and abraded areas of galvanized surfaces and apply galvanizing repair paint per B. Immediately after erection, clean field welds, bolted connections and damaged shop coat, and re-coat. END OF SECTION

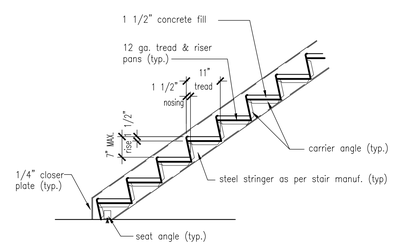

1 A08 STAIR DETAIL
scale: 1/2"=1'-0"

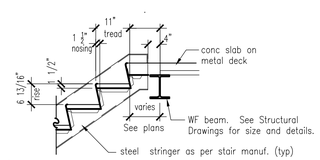

2 A08 STAIR DETAIL
scale: 1/2"=1'-0"

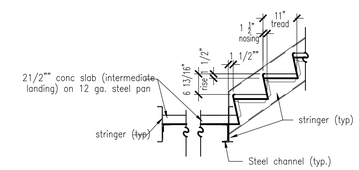

3 A08 STAIR DETAIL
scale: 1/2"=1'-0"

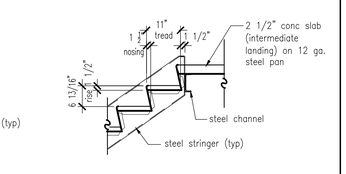

4 A08 STAIR DETAIL
scale: 1/2"=1'-0"

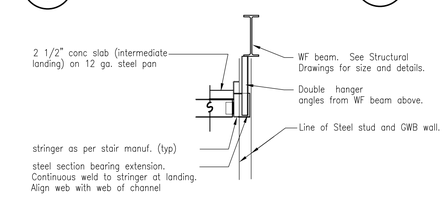

5 A08 STAIR DETAIL
scale: 1/2"=1'-0"

COPYRIGHT

BUILDING B

No.	Revisions	Date
1	Issued for Client Review	12/22/2011
2	Issued paperwork	01/09/2012
3	Answered DoB obj.	04/06/2012
4	For estimating only	09/13/2012
5	Issued for DoB appr	10/22/2012
6	Adjusted stair enclosure	1/16/2012

DOB Examiner stamp:

DOB Approval:

B-Scan job sticker:

The architect shall not have control or charge of and shall not be responsible for construction means, methods, deviations, techniques, sequences, or procedures, or for safety precautions and programs in connection with the work, for the acts or omissions of the contractor, subcontractors or any other persons performing any of the work, or for the failure of any of them to carry out the work in accordance with the contract documents. Always use dimensions as shown. Drawings are not to be scaled.

rampulla associates architects, l.l.p.
155 3rd street S.I., N.Y., 10306
•718 987-1310 •fax. 718-987-1565
www.rampulla.net

project title :
PROPOSED WOODROW SHOPPING CENTER
1243 WOODROW ROAD
STATEN ISLAND, NEW YORK

BUILDING B

drawing title :
BUILDING SECTIONS B-B AND STAIR DETAILS

seal & signature

date:	7.22.11
project #:	10009
drawing by:	RD
chk by:	RD
dwg #:	A-008.00
file #:	

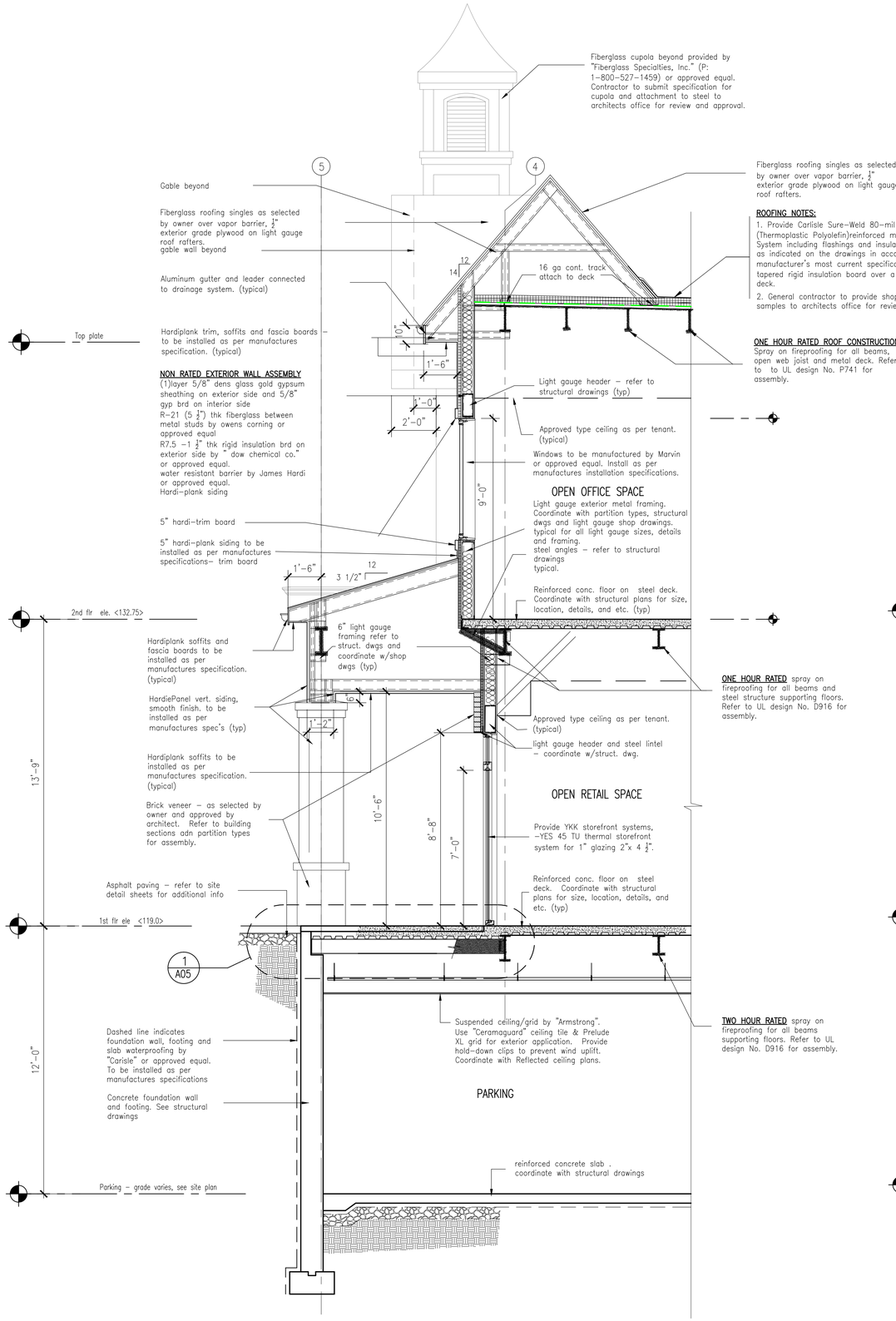

1 A9 WALL SECTION 1
SCALE: 3/8"=1'-0"

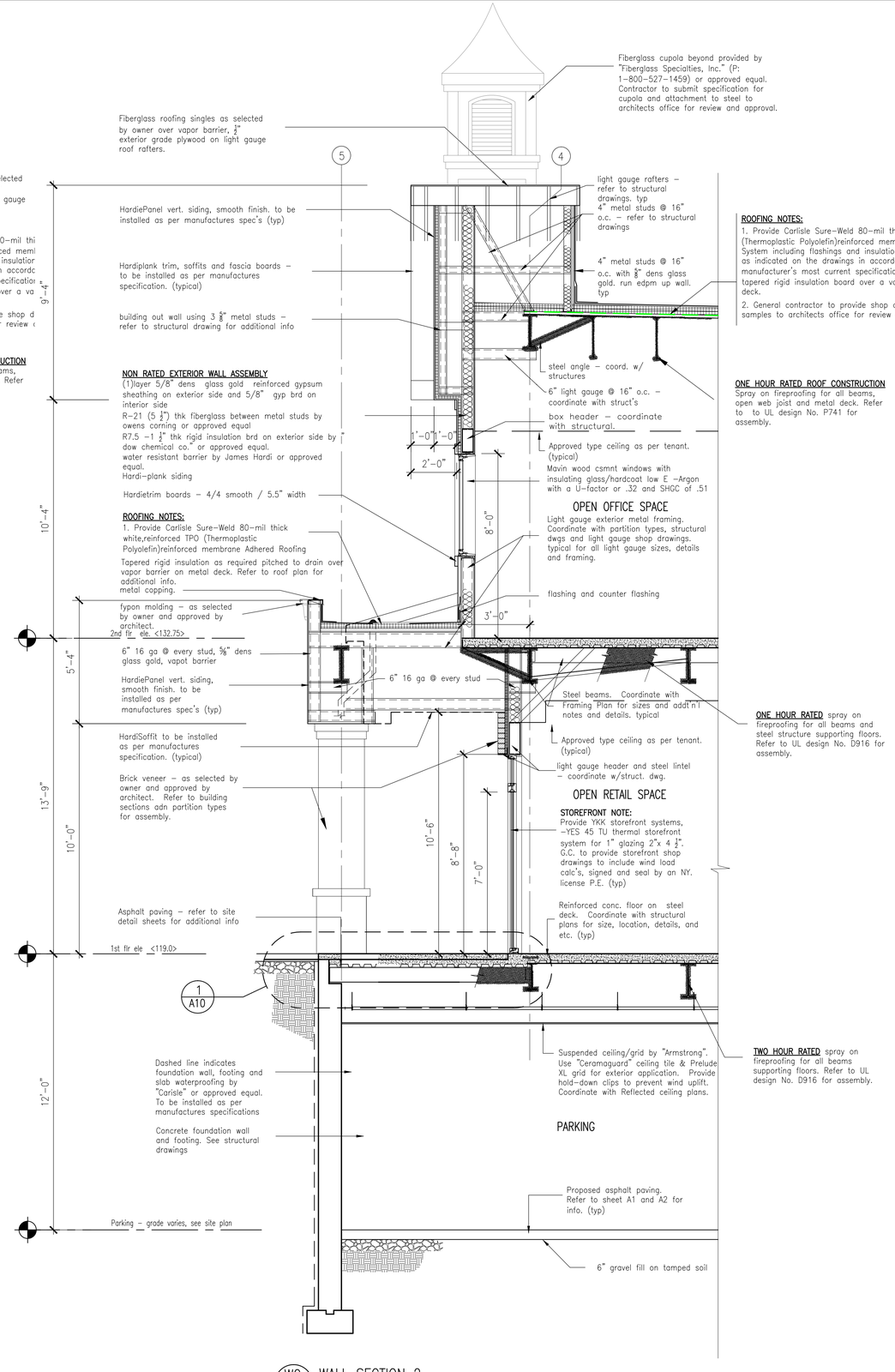

W2 A10 WALL SECTION 2
SCALE: 3 /8" =1'-0"

COPYRIGHT

No.	Revisions	Date
1	Issued for Client Review	12/22/2011
2	Issued paperwork	01/09/2012
3	Answered DoB obj.	04/06/2012
4	For estimating only	09/13/2012
5	Issued for DoB appr	10/22/2012
6	Adjusted stair enclosure	1/16/2012

DOB Examiner stamp:

DOB Approval:

B-Scan job sticker:

The architect shall not have control or charge of and shall not be responsible for construction means, methods, deviations, techniques, sequences, or procedures, or for safety precautions and programs in connection with the work, for the acts or omissions of the contractor, subcontractors or any other persons performing any of the work, or for the failure of any of them to carry out the work in accordance with the contract documents. Always use dimensions as shown. Drawings are not to be scaled.

rampulla associates architects, l.l.p.
155 3rd street S.I., N.Y., 10306
•718 987-1310 • fax 718-987-1565
www.rampulla.net

project title :
PROPOSED WOODROW SHOPPING CENTER
1243 WOODROW ROAD
STATEN ISLAND, NEW YORK

BUILDING B

drawing title :
WALL SECTIONS 1 & 2

seal & signature

date:	7.22.11
project #:	10009
drawing by:	RD
chk by:	RD
dwg #:	A-009.00
file #:	

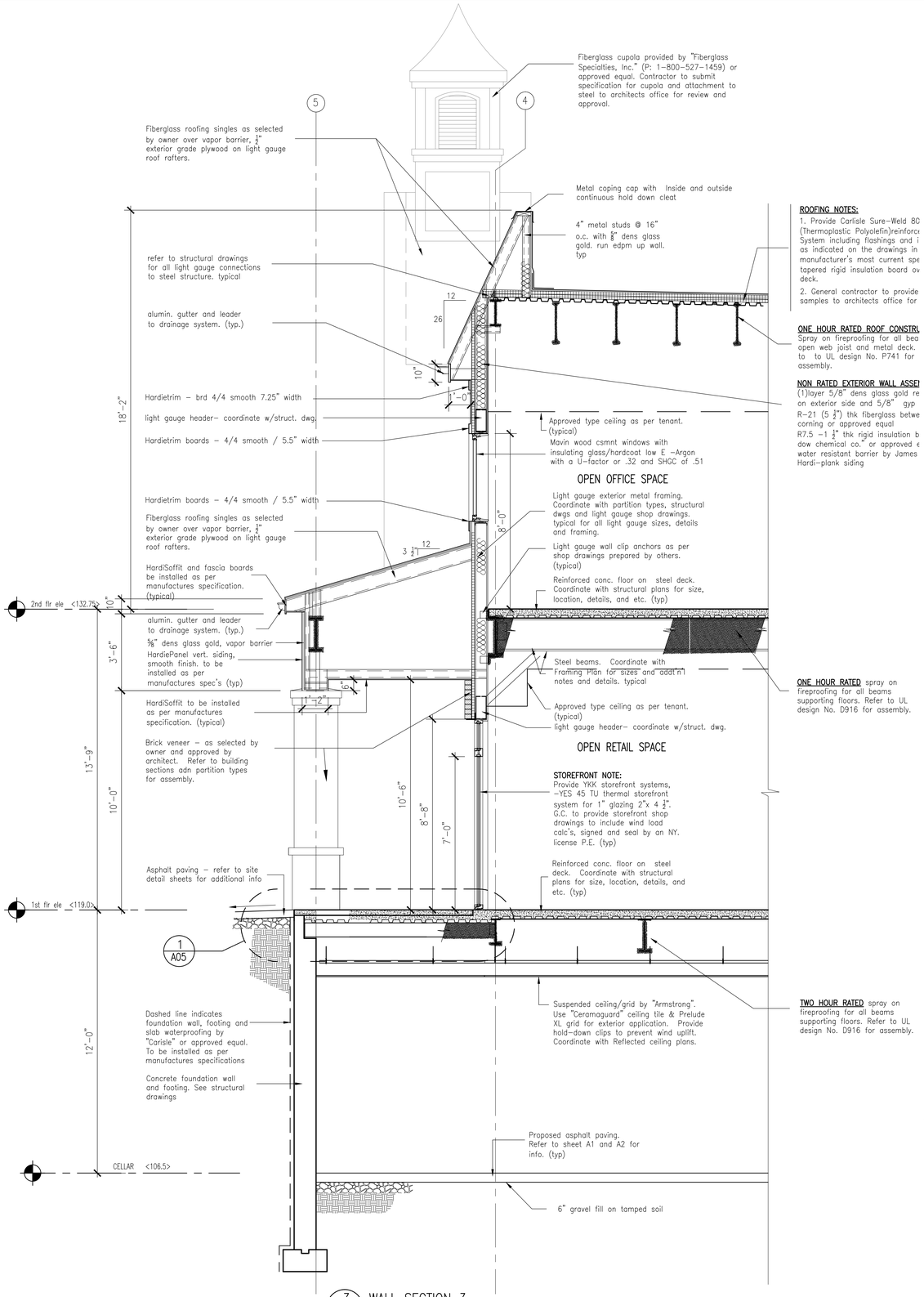

ROOFING NOTES:

1. Provide Carlisle Sure-Weld 80 (Thermoplastic Polyolefin)reinforce System including flashings and i as indicated on the drawings in manufacturer's most current spe tapered rigid insulation board ov deck.
2. General contractor to provide samples to architects office for

ONE HOUR RATED ROOF CONSTRU Spray on fireproofing for all bea open web joist and metal deck. to to UL design No. P741 for assembly.

NON RATED EXTERIOR WALL ASSEI (1)layer 5/8" dens glass gold re on exterior side and 5/8" gyp R-21 (5 ½") thk fiberglass betwe corning or approved equal R7.5 -1 ½" thk rigid insulation b dow chemical co." or approved e water resistant barrier by James Hardi-plank siding

ONE HOUR RATED spray on fireproofing for all beams supporting floors. Refer to UL design No. D916 for assembly.

TWO HOUR RATED spray on fireproofing for all beams supporting floors. Refer to UL design No. D916 for assembly.

3 A10 WALL SECTION 3
SCALE: 3 /8" =1'-0"

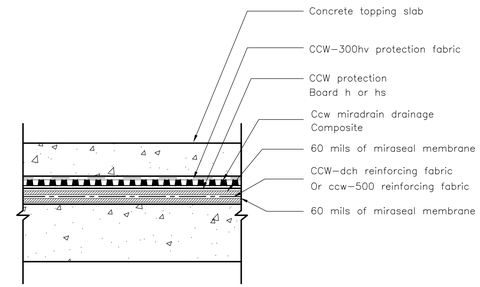

3 A10 CARLISLE MiraSEAL Detail
scale: 1 1/2"=1'-0"

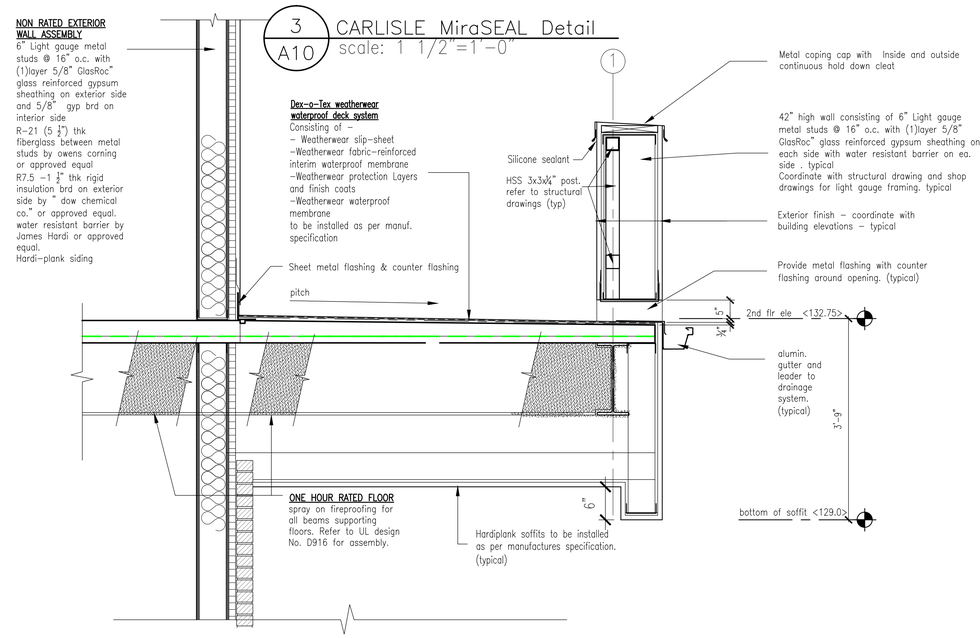

2 A10 BALCONY DETAIL
scale: 3/4"=1'-0"

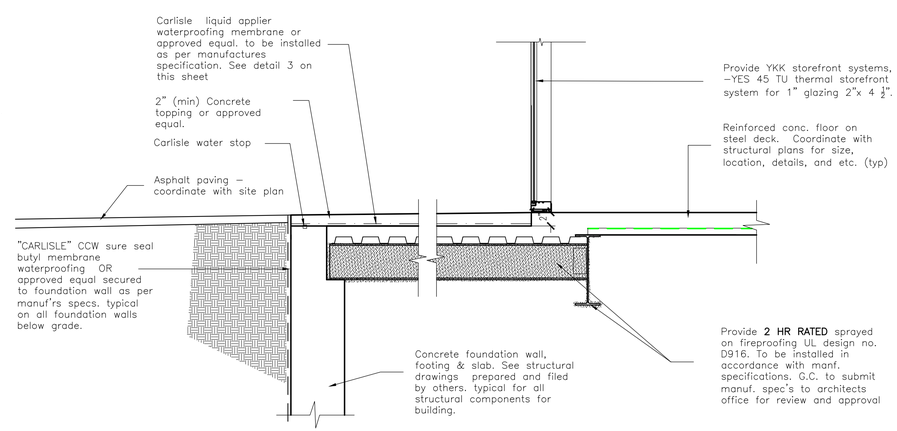

1 A10 WATERPROOFING DETAIL
scale: 3/4"=1'-0"

BUILDING B

© COPYRIGHT

No.	Revisions	Date
1	Issued for Client Review	12/22/2011
2	Issued paperwork	01/09/2012
3	Answered DoB obj.	04/06/2012
4	For estimating only	09/13/2012
5	Issued for DoB appr	10/22/2012
6	Adjusted stair enclosure	1/16/2012

DOB Examiner stamp:

DOB Approval:

B-Scan job sticker:

The architect shall not have control or charge of and shall not be responsible for construction means, methods, deviations, techniques, sequences, or procedures, or for safety precautions and programs in connection with the work, for the acts or omissions of the contractor, subcontractors or any other persons performing any of the work, or for the failure of any of them to carry out the work in accordance with the contract documents. Always use dimensions as shown. Drawings are not to be scaled.

rampulla associates architects, l.l.p.
155 3rd street S.I., N.Y., 10306
•718 987-1310 • fax 718-987-1565
www.rampulla.net

project title :
PROPOSED WOODROW SHOPPING CENTER
1243 WOODROW ROAD
STATEN ISLAND, NEW YORK

BUILDING B

drawing title :
WALL SECTIONS 3 AND DETAILS

seal & signature

date:	7.22.11
project #:	10009
drawing by:	RD
chk by:	RD
dwg #:	A-010.00
file #:	

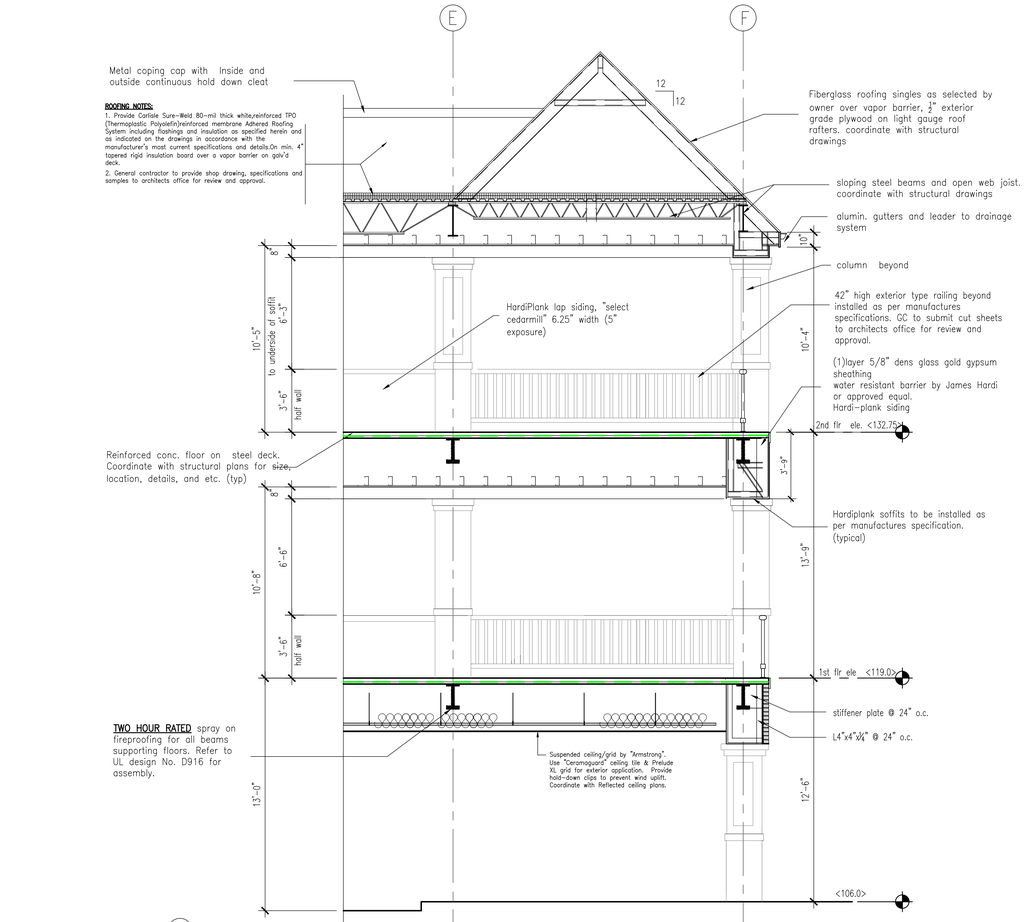

SECTION B
SCALE: 1/4=1'-0"

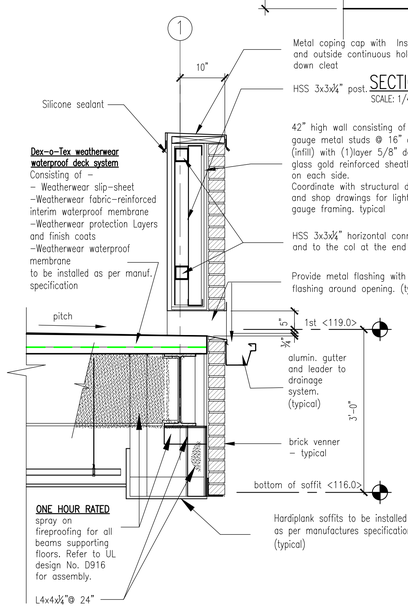

1 / A11 BALCONY DETAIL
scale: 3/4"=1'-0"

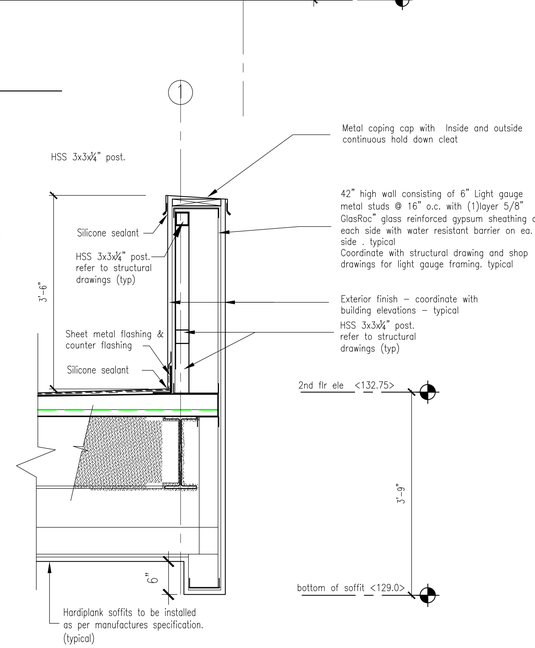

2 / A11 BALCONY DETAIL
scale: 1"=1'-0"

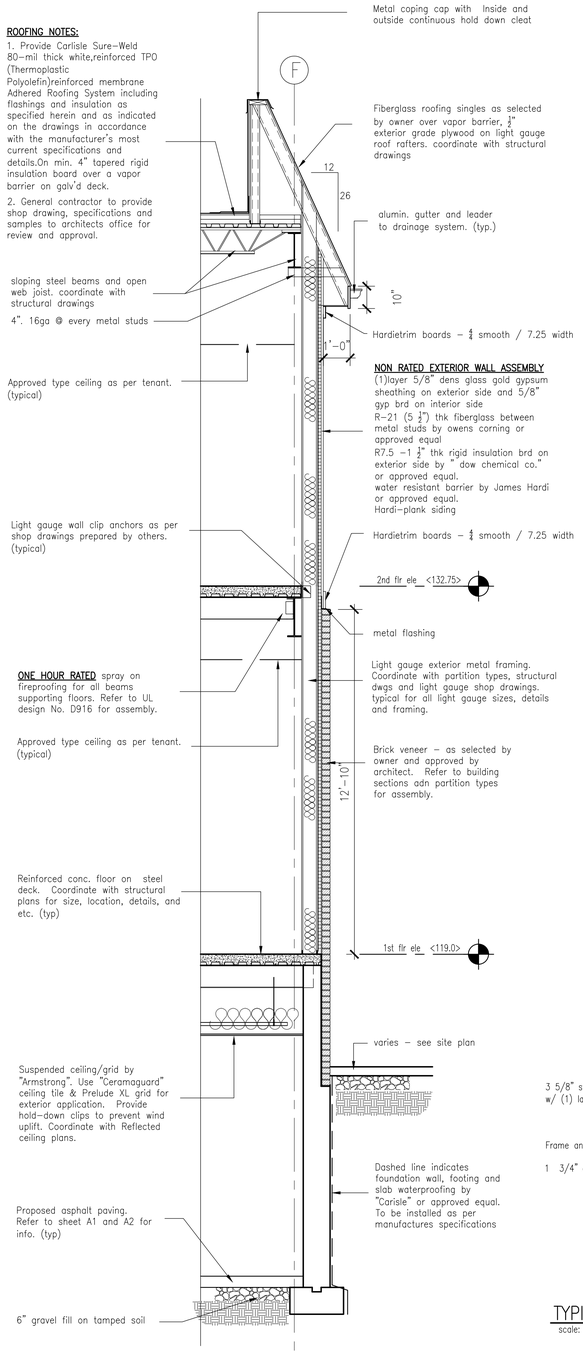

4 / A11 WALL SECTION 4
SCALE: 3 /8" =1'-0"

GENERAL DOOR NOTES:

1. Hollow metal frames for new doors to be 16 ga. Commercial grade cold rolled steel conforming to astm a366-68. Frames shall be custom made welded units with integral trim and backbends. Minimum depth of stops to be 5/8". Frames to be mortised, reinforced, drilled and tapped at the factory for fully templated mortised hardware. Provide 18 ga. Steel jamb anchors securely welded inside each jamb. Provide ceiling struts for fire rated frames as per ansi/ul 63.
2. Hollw metal doors shall be made made of 18 ga. Commercial grade cold rolled steel conforming to atm a366-68. Face sheets shall be stiffened using min. 22 ga. Continuous vertical formed steel sections spanning the full thickness of the interior space between door faces. Minimum door thickness shall be 1 3/4". Doors shall be mortised, reinforced, drilled and tapped at the factory for fully templated hardware.
3. (a)provide and install door hardware throughout the work as needed for a complete installation and as indicated on the drawings. Install hardware at heights as recommended by the door and hardware institute, except as specifically required to comply with local codes. Contractor to furnish hardware to match style and finish existing throughout the building. Coordinate keying requirements with owners representative. Submit to the office of the architect catalog cuts and a complete hardware schedule identifying manufacture, brand, catalog number, material and finish. Acceptable manufacturers for various components:
   a. Hinges: hager, stanley (heavy duty only. 3 per door)
   b. Locksets: corbin/russwin, schlage, yale(as per owners selection)
   c. Panic devices: corbin/russwin, (as per owners selection)
   d. Closers: lcn, norton (as per owners selection)
   e. Wall stops: ives, glynn johnson
   f. Floor stops: ives, glynn johnson
   g. Flushbolts: ives, glynn johnson

   (b) all hardware is to meet ada accessibility requirements
   (c) handles, pulls, latched,locks and other operating devices on doors shall have lever shape to permit operation by wrist or arm pressure and not requiring tight grasping.
   (d) door closers shall be adjusted so that from an open position of 70 degrees the door will take at least 3 seconds to move to a pont 3 inches from the latch. The maximum opening force fo all doors shall not exceed 5 pounds. All doors shall release when subjected to a 15 pound force.
   (e) provide 3 hinges and 3 silencers per door
   (f) thresholds shall not be greater than ½" in total height with the leading edge sloped at angle not more than 45deg so that no single vertical change is over ¼"
4. All rated wood doors shall be 5-ply and comply with awi/wdma pc5 construction. Doors shall be manufactured by the hot-press method, bonding faces, crossbands and core together in a single operation with type i glue. Doors manufactured by cold-pressing 2 or 3-ply pre-manufactured door skins to multiple cores in the same press will not be accepted. All doors to be supplied through one company. Fire rated doors to comply with nfpa 80 and doors shall carry a permanently affixed label or tag from ul or i.T.S. (warnock hersey) identifying it's rating. Provide minimum 5" blocking at top rail and bottom rail. All doors to meet heavy duty performance level. Door veneers to comply with the following:
   a. Veneer face grade: comply with wdma 'a' grade (formerly premium).
   B. Veneer match shall be book match (other options include balance match, center match, running match and slip match).
   C. Vertical edges shall match veneer face.
   D. Veneer shall be natural birch (other options include cherry, maple, mahogany, walnut)
   e. Veneer color/stain shall be clear (other options include pecan, light oak, nutmeg, fruitwood, cherry, mahogany).
   Doors to be factory finished with uv cured system equivalent to tr-6 catalyzed polyurethane. Contractor to submit door manufacturers product construction data, hardware attachment guide, specifications for installation, details for trim and lite/glazing installation to the office of the architect for review and approval. Contractor shall also submit door manufacturers full range of veneer species, cut, and stain/color options to the owner and architect for final selection, review and approval.
   Installation of doors to comply with wdma specifications, specific door manufacturer instructions and nfpa 80. Provide manufacturers signed warranty for manufacturing and material defects for life of original installation.
5. Contractor to submit a door, hardware, cut sheets and keying schedule to architects office for review and approval. General contractor to review all door and hardware selected with owner prior to submitting shop drawings to architects office for approval. All hardware selected to be ada approved and to be in accordance with the requirements of nyc building code.

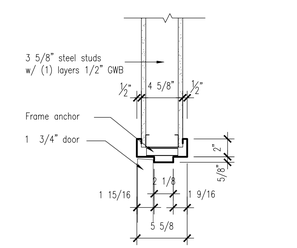

TYPICAL HEAD DETAIL
scale: 1 1/2"" = 1'-0" (NON RATED)

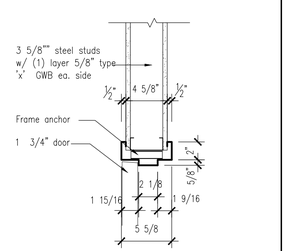

TYPICAL HEAD DETAIL
scale: 1 1/2"" = 1'-0" (1HR RATED)

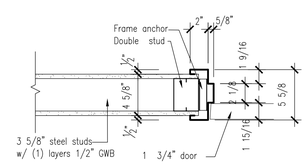

TYPICAL JAMB DETAIL
scale: 1 1/2" = 1'-0" (NON RATED)

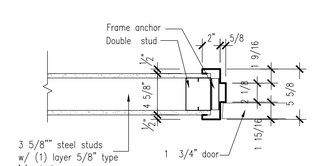

TYPICAL JAMB DETAIL
scale: 1 1/2" = 1'-0" (1HR RATED)

BUILDING B

No.	Revisions	Date
1	Issued for Client Review	12/22/2011
2	Issued paperwork	01/09/2012
3	Answered DoB obj.	04/06/2012
4	For estimating only	09/13/2012
5	Issued for DoB appr	10/22/2012
6	Adjusted stair enclosure	1/16/2012

DOB Examiner stamp:

DOB Approval:

B-Scan job sticker:

The architect shall not have control or charge of and shall not be responsible for construction means, methods, deviations, techniques, sequences, or procedures, or for safety precautions and programs in connection with the work, for the acts or omissions of the contractor, subcontractors or any other persons performing any of the work, or for the failure of any of them to carry out the work in accordance with the contract documents. Always use dimensions as shown. Drawings are not to be scaled.

rampulla associates architects, l.l.p.
155 3rd street S.I., N.Y., 10306
•718 987-1310 • fax 718-987-1565
www.rampulla.net

project title :
PROPOSED WOODROW SHOPPING CENTER
1243 WOODROW ROAD
STATEN ISLAND, NEW YORK

BUILDING B

drawing title :
SECTIONS B, DOOR NOTES AND DETAILS

seal & signature

date:	7.22.11
project #:	10009
drawing by:	RD
chk by:	RD
dwg #:	A-011.00
file #:	

COPYRIGHT

LIGHT GAUGE METAL FRAMING NOTES

Calculations and detailed shop drawings, stamped by a NYS professional engineer registered for the light- gage metal framing must be submitted and approved by the engineer of record prior to fabrication.

All lightgage framing connections to the structural steel or lightgauge members shall be provided by and designed by the lightgauge contractor.

Provide and install lightgauge metal framing as indicated on the drawings including, but not limited to, lightgauge metal stud framing for exterior walls and interior partitions, roof framing, and accessories including bracing, framing, anchors and fasteners required to complete the work.

All light gage framing components shall be formed from corrosion resistant steel in accordance with ASTM A653-94, and shall be zinc coated meeting ASTM A924. Steel shall have a minimum yield strength of 33,000 psi for all components 18 gage or thinner, and 50,000 psi for all components 16 gage and thicker.

All design, detailing, fabrication and erection of light gage framing shall be in accordance with American Iron and Steel Institute (AISI) "Specifications for design of Cold-Formed Steel Structural Members" latest edition, and the manufacturer's details and specifications.

Contractor shall submit to the Office of the Architect for review and approval, fabrication and fasteners (location, type and spacing), stiffeners, connections, etc, as needed for the proper erection shop drawings of all light gauge metal studs (both interior and exterior) to be used on the project. Shop drawings shall detail all member sizes, spacing, position, location permanent and temporary bracing, load conditions and design calculations relative to connections, fastening devices and anchorage, erection of the structure. Contractor shall also include necessary engineering data indicating all as well as size and gage of members. Calculations and drawings must be prepared by a Structural Engineer licensed in the State of New York, and shall be signed and sealed by this Engineer.

Install metal framing systems in accordance with approved shop drawings and manufacturer's written instructions and details. Provide all stiffener's, bridging and bracing as required for system rigidity and to maintain plumb alignment.

Provide all required wall blocking for all cabinets, counter, all fixtures, and etc.

All Interior light gauge metal stud partitions with a maximum unbraced length of 15'-0" to be 22 gauge (min). Partitions exceeding 15'-0" to be braced at every stud and to be 20 gauge min. Unless specified in light gauge shop drawings.

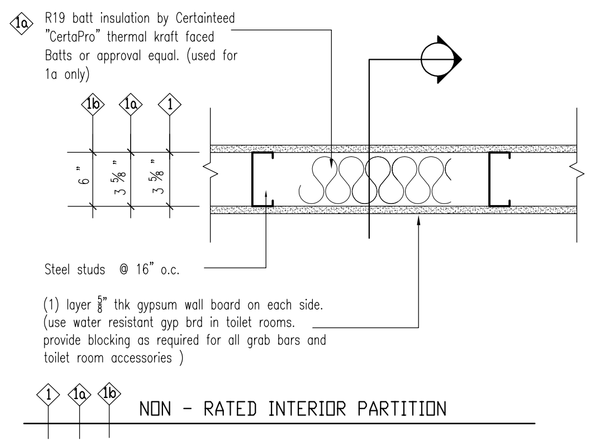

1 1a 1b NON - RATED INTERIOR PARTITION

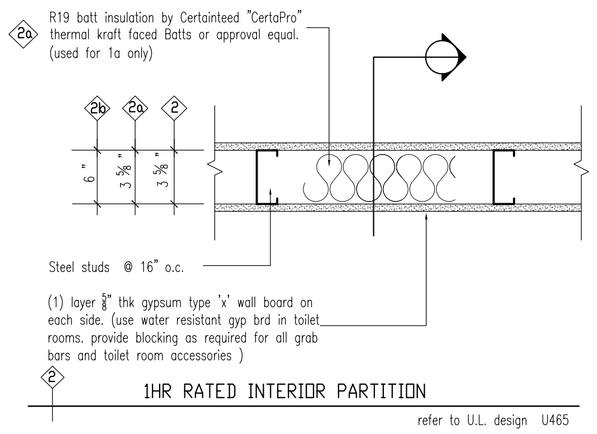

2 1HR RATED INTERIOR PARTITION

refer to U.L. design U465

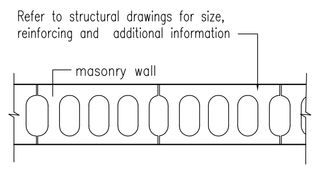

Note: masonry unit to be selected by owner and approved by architect. (typical)

3 8" CONCRETE MASONRY WALL

SCALE: N.T.S.

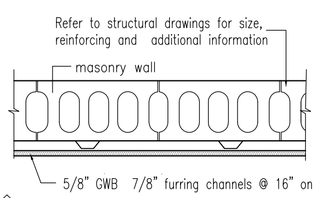

Note: masonry unit to be selected by owner and approved by architect. (typical)

4 8" CONCRETE MASONRY WALL

SCALE: N.T.S.

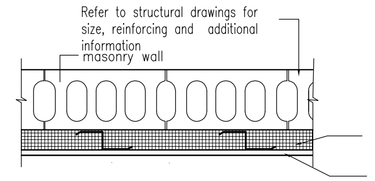

Note: masonry unit to be selected by owner and approved by architect. (typical)

5 8" CONCRETE MASONRY WALL

SCALE: N.T.S.

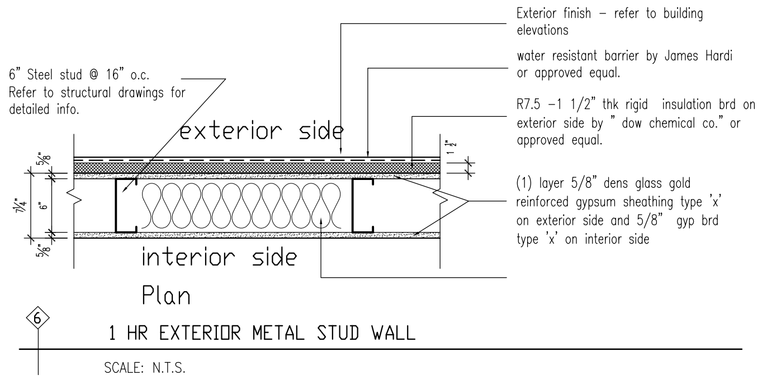

6 1 HR EXTERIOR METAL STUD WALL

SCALE: N.T.S.

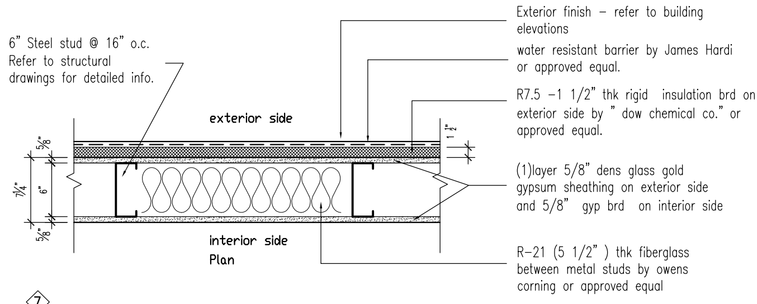

7 NON RATED EXTERIOR METAL STUD WALL

SCALE: N.T.S.

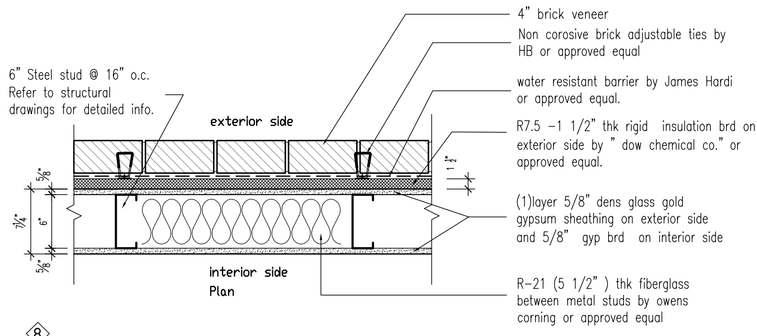

8 NON RATED EXTERIOR METAL STUD WALL

SCALE: N.T.S.

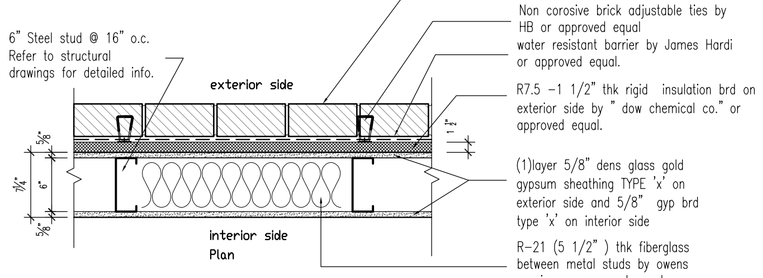

9 1HR RATED EXTERIOR METAL STUD WALL

SCALE: N.T.S.

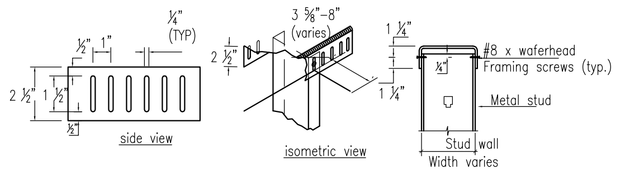

SLIP TRACK

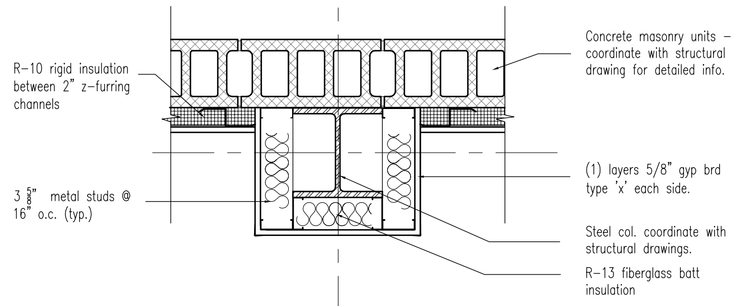

C6 A12 1 HOUR RATED COLUMN ENCLOSURE

Scale: 1"=1'-0"

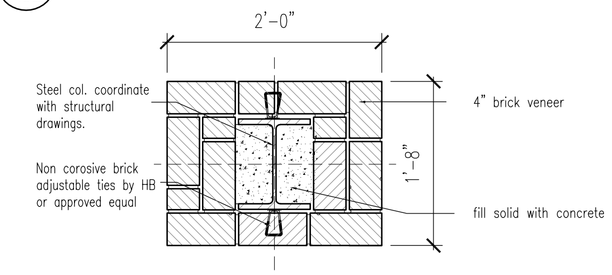

C5 A12 1 HOUR RATED EXTERIOR COLUMN ENCLOSURE

Scale: 1"=1'-0"

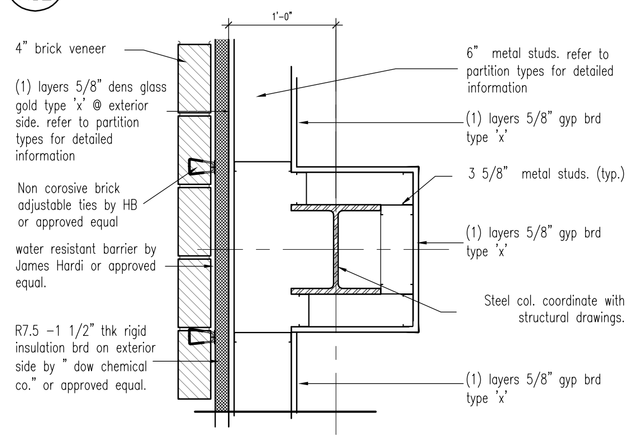

C4 A12 ONE HR RATED COLUMN ENCLOSURE

Scale: 1"=1'-0"

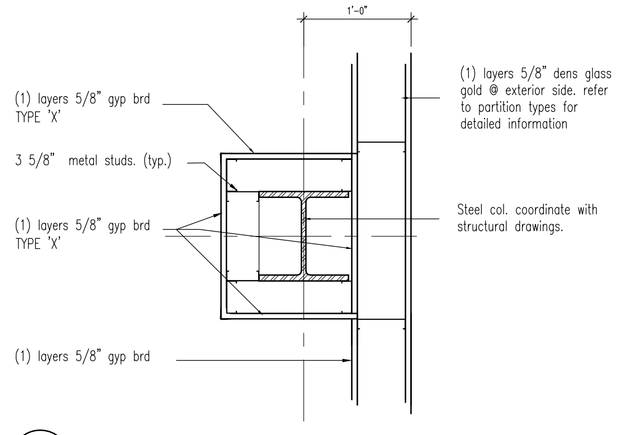

C3 A12 ONE HR RATED COLUMN ENCLOSURE

Scale: 1"=1'-0"

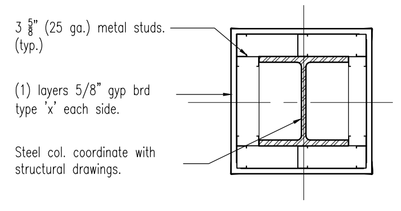

C2 A12 1 HOUR RATED INTERIOR COLUMN ENCLOSURE

Scale: 1"=1'-0"

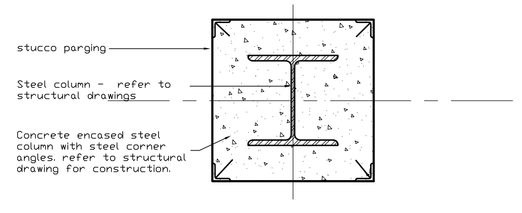

C1 A12 1 HOUR RATED COLUMN ENCLOSURE

Scale: 1"=1'-0"

UL 263
Design No. X528

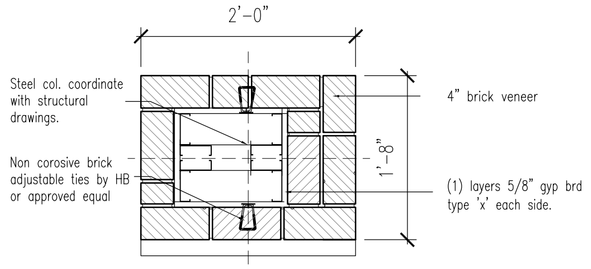

C13 A12 EXTERIOR COLUMN ENCLOSURE

Scale: 1"=1'-0"

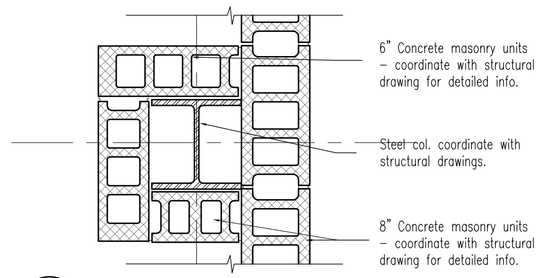

C12 A12 1 HOUR RATED EXTERIOR COLUMN ENCLOSURE

Scale: 1"=1'-0"

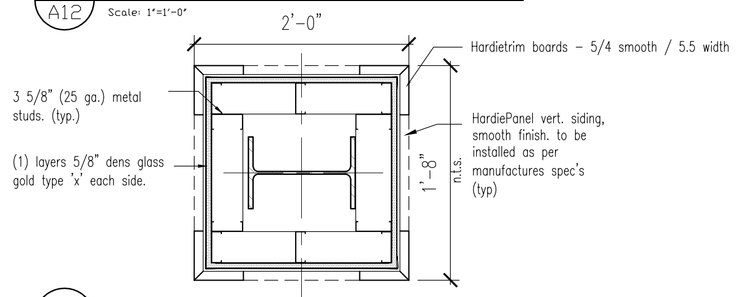

C11 A12 1 HOUR RATED EXTERIOR ENCLOSURE

Scale: 1"=1'-0"

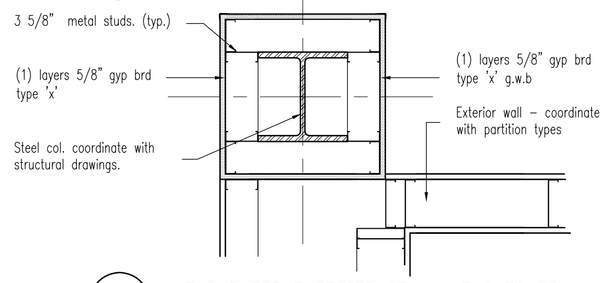

C10 A12 1 HOUR RATED EXTERIOR COLUMN ENCLOSURE

Scale: 1"=1'-0"

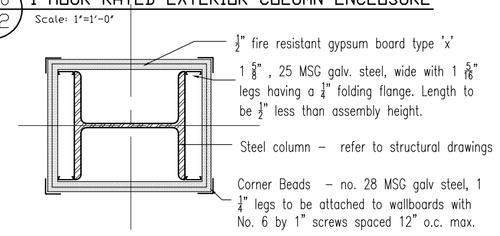

C9 A12 1 HOUR RATED EXTERIOR COLUMN ENCLOSURE

Scale: 1"=1'-0"

UL 263
Design No. X528

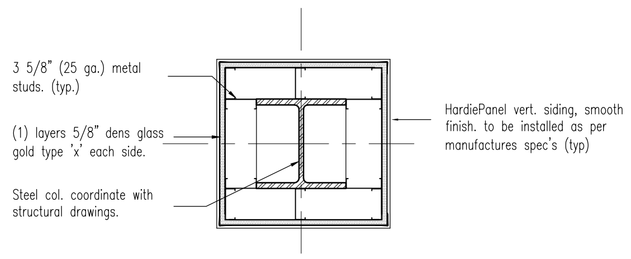

C8 A12 1 HOUR RATED EXTERIOR COLUMN ENCLOSURE

Scale: 1"=1'-0"

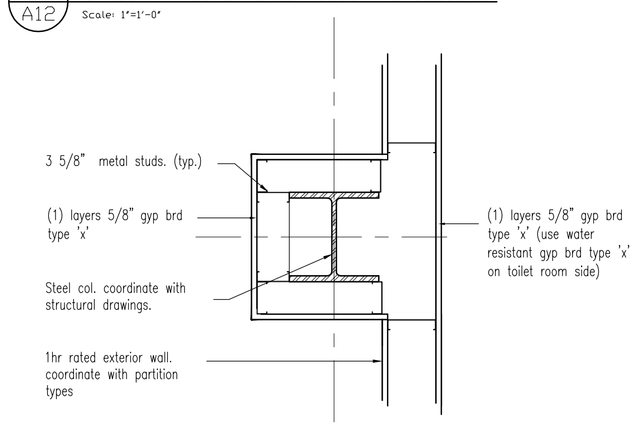

C7 A12 ONE HR RATED COLUMN ENCLOSURE

Scale: 1"=1'-0"

BUILDING B

COPYRIGHT

No.	Revisions	Date
1	Issued for Client Review	12/22/2011
2	Issued paperwork	01/09/2012
3	Answered DoB obj.	04/06/2012
4	For estimating only	09/13/2012
5	Issued for DoB appr	10/22/2012
6	Adjusted stair enclosure	1/16/2012

DOB Examiner stamp:

DOB Approval:

B-Scan job sticker:

The architect shall not have control or charge of and shall not be responsible for construction means, methods, deviations, techniques, sequences, or procedures, or for safety precautions and programs in connection with the work, for the acts or omissions of the contractor, subcontractors or any other persons performing any of the work, or for the failure of any of them to carry out the work in accordance with the contract documents. Always use dimensions as shown. Drawings are not to be scaled.

rampulla associates architects, l.l.p.

155 3rd street S.I., N.Y., 10306
• 718 987-1310 • fax 718-987-1565
www.rampulla.net

project title :

PROPOSED WOODROW SHOPPING CENTER
1243 WOODROW ROAD
STATEN ISLAND, NEW YORK

BUILDING B

drawing title :

PARTITION TYPES AND COLUMN ENCLOSURE DETAILS

seal & signature

date:	7.22.11
project #:	10009
drawing by:	RD
chk by:	RD
dwg #:	A-012.00
file #:	

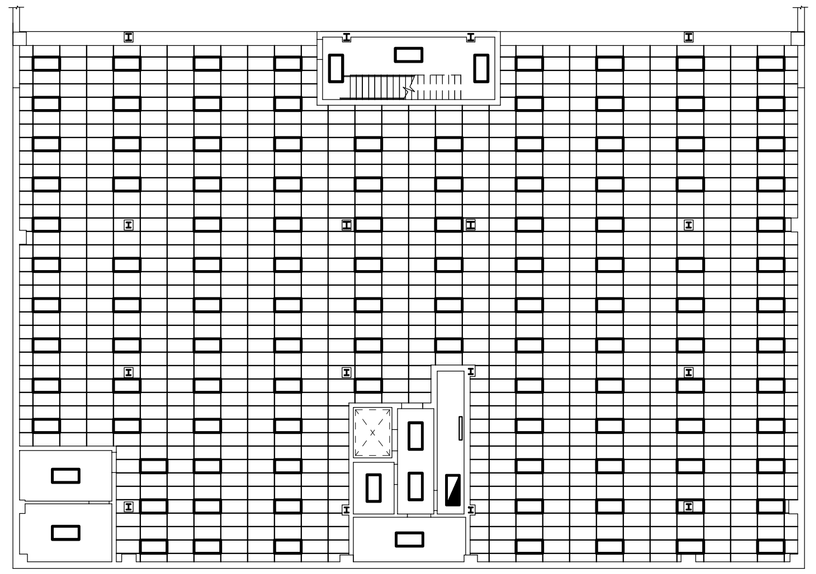

CELLAR FLOOR REFLECTED CEILING PLAN
SCALE: 3/32"=1'-0"

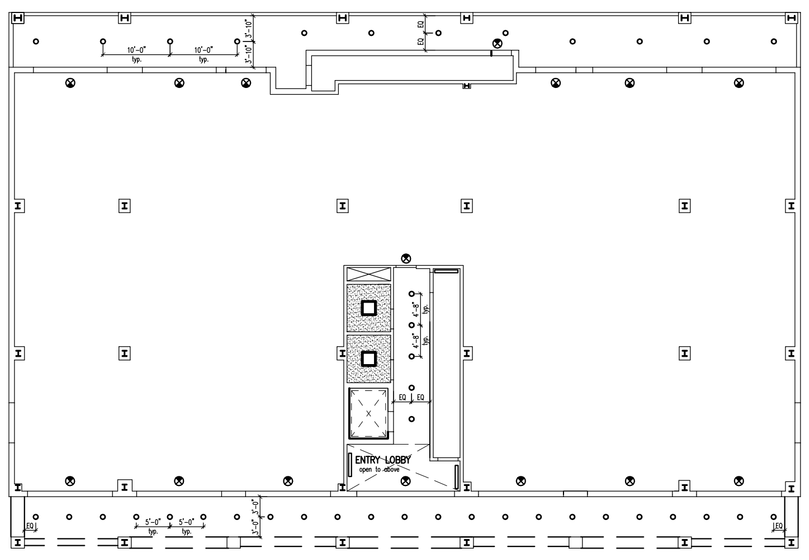

FIRST FLOOR REFLECTED CEILING PLAN
SCALE: 3/32"=1'-0"

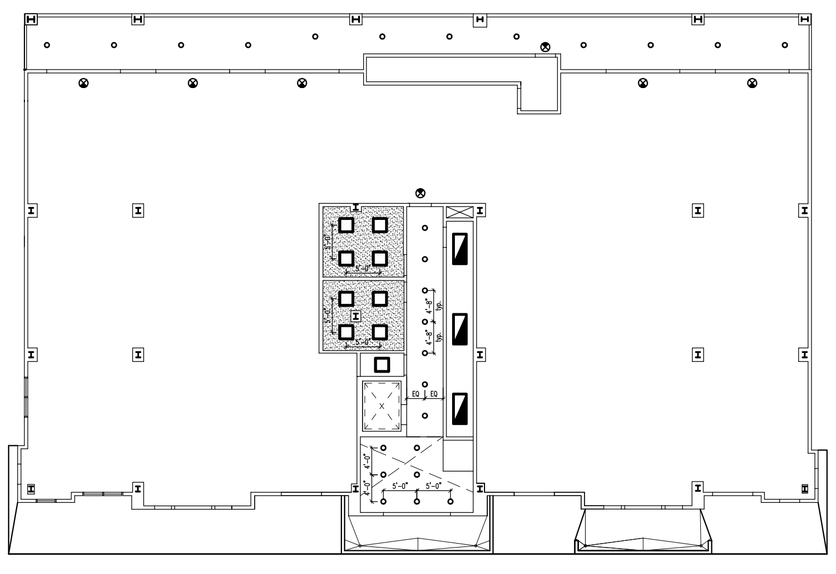

SECOND FLOOR REFLECTED CEILING PLAN
SCALE: 3/32"=1'-0"

LEGEND

NOTE:

Coordinate all information with Mechanical Plans, Lighting Plans, and Sprinkler Plans.

Coordinate electrical requirements and circuiting of fixtures with Electrical Plans.

Coordinate ceiling diffusers, return registers, sprinkler heads and any other ceiling appurtances with Mechanical Plans

2x2 2x4 — light fixture as selected by owner and approved by architect. G.C. to submit cut sheets and spec' to architects office for review and approval. Coordinate with electrical drawings

recessed down light as selected by owner and approved by architect. G.C. to submit cut sheets and spec' to architects office for review and approval.Coordinate with electrical drawings

Emergency night light fixture as selected by owner and approved by architect. G.C. to submit cut sheets and spec' to architects office for review and approval.Coordinate with electrical drawings

emergency light fixture with integral batter rated for 90 min. as selected by owner and approved by architect. G.C. to submit cut sheets and spec' to architects office for review and approval.Coordinate with electrical drawings

wall mounted light fixture as selected by owner and approved by architect. G.C. to submit cut sheets and spec' to architects office for review and approval.Coordinate with electrical drawings

2' x 4' Acoustical lay in panels by Armstrong. Use Ceramaguard ceiling tile & Prelude XL grid for exterior application or approved

SUSPENDED CEILING NOTES

1. Ceilings that are to be suspended below floor or roof construction by means of a framing system shall consist of supporting hangers, carrying channel and a supporting grid complying with reference standard RS 5-16 or shall have supporting hangers and carrying channels and a supporting grid that can be demonstrated to the satisfaction of the dept. of buildings to be of strength adequate to support the ceiling material. The hangers and supporting grid shall be of noncombustible materials. Where, in table 3-4, floor or roof construction is required to have a fire-resistance rating, the ceiling may be suspended below the fire-resistance construction.

2. A luminous ceiling shall be defined as a ceiling consisting of translucent, louvered, egg-crated, mesh, or similar light-diffusing material suspended from the ceiling or structural framework. A suspended ceiling containing less than 20 sq.ft. of translucent, louvered, egg-crated, mesh or similar material in any 100 sq.ft. of ceiling area shall not be considered a luminous ceiling.

3. The hangers shall be spaced at 4'-6" or less on centers. Each hanger shall be capable of carrying all loads suspended therefrom plus an additional 200 pounds located at midspan. The midspan deflection shall not exceed 1/360 of the span. The connections of the carrying channel to the hangers shall be adequate for the load supported by the main runner plus two hundred (200) pounds.

4. The main runner or nailing bar shall be capable of carrying all loads suspended therefrom. The midspan deflection shall not exceed 1/360 of the span. Each connection of the main runner or nailing bar to the carrying channels shall be adequate for the load supported by the main runner plus two hundred (200) pounds.

5. Cross runners shall be capable of carrying all loads suspended therefrom. The midspan deflection shall not exceed 1/360 of the span.

6. Splines shall not be considered as providing nor shall be used for providing structural support for the ceiling

7. All connection devices other than bolts shall be approved by the Board of Standards and Appeals. However, they may be accepted under the code test method when test results indicate a factor of safety of four are filed in accordance with the provisions of section G26-106.2 of the building code.

8. Component materials which oxidize or corrode when exposed to normal use environments shall be provided with protective material.

a. Components fabricated from sheet steel shall be given an electro-galvanized, hot dipped galvanized,cadmium, or zinc coating.
b. Components fabricated from aluminum alloys shall be anodized when exposed to a corrosive atmosphere.

9. Hangers
a. Buildings of construction group I- for requirements see hanger details.
b. Minimum sizes and quality-hangers for suspending carrying channels shall be a minimum of 1/4" diameter galvanized steel rods or flat bars at least 1" x _ ".
c. Use of existing hangers-existing hangers may not be used unless they comply, or are made to comply, with all the above provisions relating to hangers.

10. Carrying channels shall be installed so that they are level within 1/8" in 12 ft. leveling shall be performed with the supporting hangers taut. Kinks or bends shall not be made in hangers as a means of leveling the carrying channels. Carrying channel shall be attached to the hangers in a manner that will prevent any vertical movement or rotation.

11.Main runners shall be installed so that they are all level within 1/8" in 12 ft. Leveling shall be performed with the main runner in firm contact with the carrying channel. Attachment to the carrying channels-main runners shall be attached to the carrying channels in a manner that will prevent any vertical movement or rotation.

12. New suspended ceilings below existing suspended ceiling.
a. In buildings of construction group I not more than one existing suspended ceiling may be retained above the new suspended ceiling. All other existing ceilings must be removed. Where an existing ceiling is retained, the new main runners shall be supported directly from the carrying channels adjacent to the hangers. b. In buildings of construction group II all existing suspended ceilings shall be removed prior to installation of new suspended ceiling.

13. Ceiling fixtures a. Fixtures installed in acoustical tile or lay-in panel ceilings shall be mounted in a manner that will not compromise ceiling performance. See detail.
b. Fixtures exceeding 80 lbs. in weight shall be supported independent of ceiling suspension system. fixtures weighing 80 lbs. or less may be supported from the main runners. c. Fixtures shall be installed so that the main runners or carrying channels are not eccentrically loaded unless suitable accessory devices are employed and the main runner and/or carrying channel design provides for the torsional stresses.

14. Ceiling grid and acoustic tiles manufactured by u.s. gypsum inc. or approved equal.

15. Location of all duct penetrations @ clg. shall be coordinated in field w/ mechanical contractor as approved by the architect.

16. All sprinkler heads shall be located @ the center of the ceiling tile in which they are to be located.

17. All ceiling penetrations, duct work, piping, vents, fume hood exhaust & any and all appurtenances which are to penetrate ceiling shall be coordinated in field by G.C. . If any discrepancies exist, notify the office of the architect prior to proceeding with work.

18. Refer to sprinkler plans for additional information pertaining to sprinkler heads.

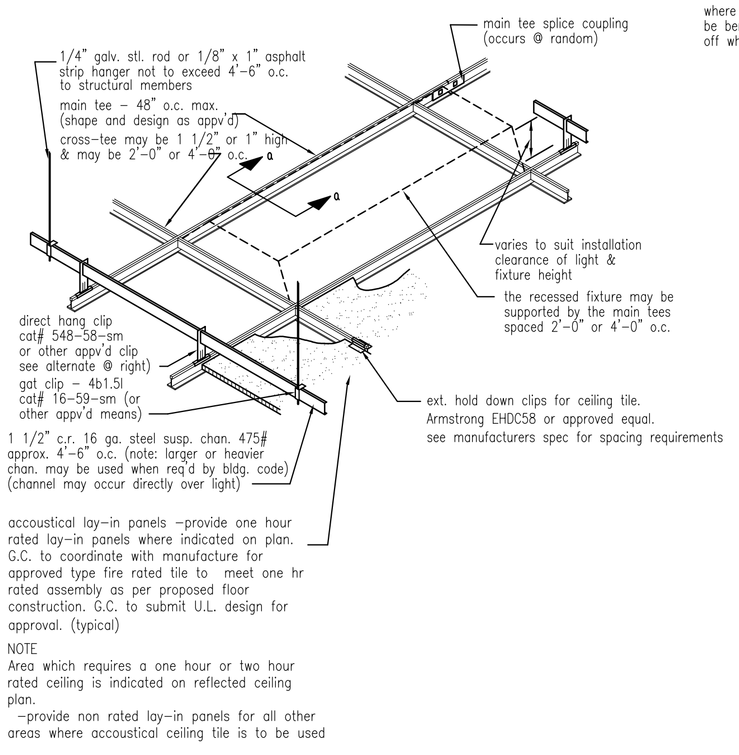

NOTE
Area which requires a one hour or two hour rated ceiling is indicated on reflected ceiling plan.
-provide non rated lay-in panels for all other areas where accoustical ceiling tile is to be used

detail of exposed 't' grid system

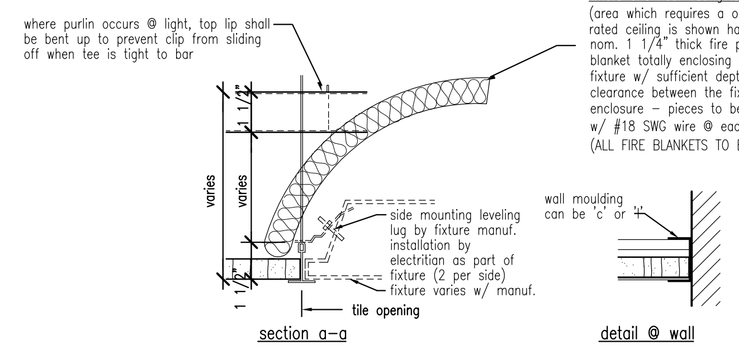

section a-a

detail @ wall

FIRE BLANKETS (only @ areas of ceiling where one hour rating is required)
(area which requires a one hour rated ceiling is shown hatched on reflected ceiling plan) nom. 1 1/4" thick fire protection blanket totally enclosing light fixture w/ sufficient depth to provide 1 1/2" clearance between the fixture & the enclosure - pieces to be held together w/ #18 SWG wire @ each corner
(ALL FIRE BLANKETS TO BEAR U.S.G. LABEL)

notes:
1. at each end of light fixture an interlocking cross tee or locking bar must be used.
2. the total weight of a light fixture and other equipment (air boxes, etc.) & clg. material supported by the main beam must not exceed the allowable deflection of 1/360 of its span. deflection data must be furnished by the manufacturer.
3. surface or pendent fixtures must be independently supported from 1 1/2" black iron or from floor or roof construction.

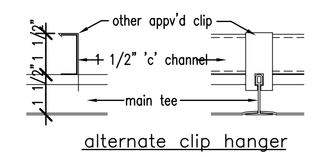

alternate clip hanger

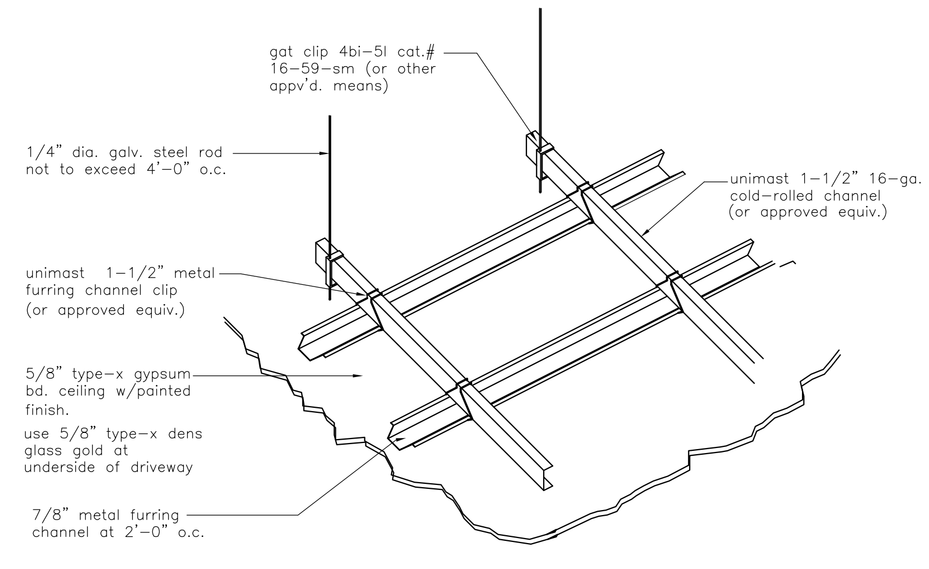

suspended gypsum board ceiling detail
nts

No.	Revisions	Date
1	Issued for Client Review	12/22/2011
2	Issued paperwork	01/09/2012
3	Answered DoB obj.	04/06/2012
4	For estimating only	09/13/2012
5	Issued for DoB appr	10/22/2012
6	Adjusted stair enclosure	1/16/2012

DOB Examiner stamp:

DOB Approval:

B-Scan job sticker:

The architect shall not have control or charge of and shall not be responsible for construction means, methods, deviations, techniques, sequences, or procedures, or for safety precautions and programs in connection with the work, for the acts or omissions of the contractor, subcontractors or any other persons performing any of the work, or for the failure of any of them to carry out the work in accordance with the contract documents. Always use dimensions as shown. Drawings are not to be scaled.

rampulla associates architects, l.l.p.
155 3rd street S.I., N.Y., 10306
•718 987-1310 • fax 718-987-1565
www.rampulla.net

project title :
PROPOSED WOODROW SHOPPING CENTER
1243 WOODROW ROAD
STATEN ISLAND, NEW YORK

BUILDING B

drawing title :
REFLECTED CEILING PLAN AND DETAILS

seal & signature

date:	7.22.11
project #:	10009
drawing by:	RD
chk by:	RD
dwg #:	A-013.00
file #:	

COPYRIGHT

GENERAL NOTES:

1. All contractors to visit job site and become familiar with the existing conditions before submitting bids and/or proceeding with any work.

2. Contractor shall provide room finish schedule, door & hardware schedule & accessories as based on walk through with owner, to office of Architect prior to submitting bids and/or proceeding with any work. See construction notes on drawing this sheet for additional notes.

2. Contractor shall provide a list of all items and equipment that will not be installed, delivered, or functioning before the scheduled tenant move in date. The list should also include when the work shall be completed and what temporary measures he intends to take to compensate for the delays. Any costs for known delays should be part of the original bid and the list should be part of the contractors bid.

3. Contractor shall provide a list of all his subcontractors and schedule of work tasks and critical dates to meet the final completion date, including the punch list to the architect, landlord and tenant before construction or the subcontractor is put under contract.

4. Contractor shall schedule the punch list to take place a minimum of four (4) working days before the schedule tenant occupancy date. This will allow for furniture and phone installation, contractor shall provide notification to the architect and landlord when the punch list items have been completed or what items remain and why. Any work required after the tenants move in shall be completed after tenants working day and at no additional cost. Contractor to coordinate work with tenant and to protect and/or move any tenant items and furniture. All punch list items must be completed within 30 days of the punch list date.

5. Contractor shall provide a professional cleaning service prior to the punch list and tenant furniture move. This shall include cleaning glass, waxing, washing, polishing, dusting, vacuuming, etc. Contractor work completed after the punch list will also be cleaned in such a manner. Coordinate with landlord for building services that may be used prior to bidding.

6. All dimensions are from centerline of partition. Contractor shall coordinate wall paneling thickness and support system with supplier and locate GYB wall accordingly. Coordinate any dimension conflicts or problems with architect. Dimensions at file alcoves, millwork, wood paneling, floor and ceiling patterns and corridors are always hold dimensions. In no cases shall dimensions be scaled from drawings.

7. Contractor shall provide non-combustible blocking in wall for all wall hung items including (furniture items NIC) Coordinate with vendor and see furniture plan issued for reference only. Coordinate all work required for mechanical/electrical items.

8. Tenant Move-In: Tenant will move over a weekend or week night as approved by the landlord. The contractor shall coordinate with the landlord to make certain that all housekeeping items are completed prior to move-in. This would include wiping down, cleaning glass, washing, waxing, vacuuming, or any other service which would be performed under the contractors and landlord's standard building maintenance cleaning program. Contractor to see that one (1) standby person is available during the move-in to provide a final cleanup so that the suite is ready for comfortable client work at 8:00 A.M. the following business day.

9. Measurement and Payment: Work shall not proceed by contractor in which he expects additional compensation beyond the written contract without written authorization from tenant and landlord. Failure to obtain such authorization shall invalidate any claim for additional compensation.

10. The intent of the contract documents is to allow for the performance of the work. Every item necessarily required may not be specifically mentioned or shown. Unless expressly stated, all systems and equipment shall be completed and appropriately operable. Furnish and install all specified and appropriate items, and all incidental, accessory, and other items not specified but required for a complete and finished assembly.

11. No work defective in workmanship or quality or deficient in any requirements of the contract documents will be acceptable despite the architect's failure to discover or point out defects or deficiencies during construction. Defective work revealed within the time required by guarantees shall be replaced by work conforming with the intent of the contract. No payment either partial or final, shall be construed as an acceptance of defective work or improper materials.

12. Patch and repair all fireproofing damage incurred during demolition and/or construction. Fireproof as required by code all new penetrations generated by the work described in these documents.

13. "As-Builts" record drawings during the course of construction, actual locations of construction items denoted in the construction documents shall be indicated to scale, in contrasting ink on the drawings for all runs of mechanical, sprinkler, plumbing and electrical work; including site utilities and concealed deviations from the drawings. Upon completion of the project, the architect will provide the contractor with a reproducible set of original documents for this set shall be conspicuously marked "as-built" documentation. "As-builts" and delivered to the architect.

14. It is intended that the contractor provide a complete job and any omissions in these notes or in the outline of work shall not be construed as relieving the contractor of such responsibilities implied by scope of work except for items specifically notes.

15. Should any portion of the contract documents prove to be, for whatever reasons, unenforceable, such unenforceability shall not extend to the remainder of the contract nor shall it void any other provisions of the contract.

16. Throughout the duration of the project refrain from actions that could lead to the filing of claims of lien by subcontractors, suppliers of materials, labor, service, equipment or any other individual or company so entitled under governing laws and regulations unless reasonable and justifiable cause can be shown. Approval for payment shall be contingent upon the contractor's obtaining and furnishing to the architect signed releases from such individuals or companies.

17. The contractor is responsible for checking contract documents, field conditions and dimensions for accuracy and confirming that work is buildable as shown before proceeding with construction. If there are any questions regarding these or other coordination issues, the contractor shall submit them, in writing, to the architect and is responsible for obtaining a written clarification from the architect before proceeding with work in question, or related work.

18. Do not scale drawings; dimensions shall govern. Details shall govern over plans and elevations. Large scale details shall govern over small scale details.

19. Clarify all discrepancies relative to construction documents, specifications, and field conditions prior to submitting bids and commencing work.

20. There shall be no substitution of materials where a manufacturer is specified. Where the term "or equal" is issued, the architect alone shall determine equality based upon information submitted by the contractor.

28. The contractor shall be responsible for the distribution of drawings to all trades under his jurisdiction. Do not proceed with any work requiring additional compensation beyond the contract amount without written authorization from the owner. Failure to obtain authorization shall invalidate any claim for extra compensation.

SHOP DRAWINGS

1. The contractor shall first review, add required field dimensions, stamp and then forward all shop drawings and samples to architect for approval. All finishes, millwork, exposed items or equipment, doors, frames and hardware, etc. must be submitted for review and written approval.

2. Prior to the start of construction of any items and or the ordering of any and all finish materials, the contractor shall submit to the designer, with an accompanying transmittal, one (1) original and one (4) copies of required shop drawings and no fewer than three (3) 3" x 3" samples of the item or from the dye lot of the finish material to be installed, for the review and written approval of the designer. The contractor must contact the architect prior to installation if the item does not match the approved sample.

3. No substitutions will be allowed without prior written approval.

4. Any changes in the shop drawings from design or specifications indicated in this set must be noted to the architect for approval. Any item clearly different than the design indicated in this set may be rejected in the field at suppliers cost even with approved shop drawings.

BUILDING RULES

1. Items listed are applicable to all contractors, vendors, suppliers and material handlers. A violation, in whole, or in part, will be cause for removal from the building, and will jeopardize the contract.

2. The building owner may provide to the contractor all building standards, regulations and any other additional information for building standard compliance. Verify prior to bidding.

3. All contractors, and subcontractors are to visit job site and become familiar with existing conditions before submitting bids and proceeding with any work. When any item or finish is scheduled to match existing, the supplier, vendor or subcontractor should also visit site in order to provide a perfect match or correct items. If these documents call out for an item that does not match installed existing conditions the contractor shall notify the architect.

4. The contractor shall review these documents and obtain all permits before the start of any demolition or construction. The architect and landlord must be notified of any problems.

5. All work shall conform to the requirements of the current state, federal and local building codes and ordinances, OSHA and ADA and all other applicable codes and all other governing authority having jurisdiction.

6. Unforeseen conditions inside of the construction limits that do not meet local codes and are being required to do so by local building officials must be coordinated with the building owner and are not part of these documents but must be completed. Such items may include existing openings in rated walls above ceilings that must be sealed or missing mechanical dampers or an existing wall that does not have a correct fire rating. Coordinate such work with landlord before starting.

COPYRIGHT

1. Proof of certificate of all necessary insurance shall be filed with landlord/tenant to indemnify and hold harmless the owner, landlord, tenant, architect and agents thereof from damages and losses resulting from contractors execution of work.

2. Payment: Work shall not proceed by contractor or supplier in which he expects additional compensation beyond the written contract without written authorization from the tenant, construction manager and architect.

3. Design: Work shall not proceed by contractor or supplier that changes the design intent without the written authorization from the tenant, construction management and architect.

4. These drawings represent the visual design intent as expressed by the designer. In no way are they meant to direct the contractor in matters pertaining to structural performance, framing, supports, code compliance, manufacturers instructions, millwork construction, etc. The contractor is fully responsible for structural integrity and performance of all items called for in these drawings. Contact architect with any conflicts.

5. Contractor shall not allow debris to accumulate, remove and dispose of all debris caused by demolition/construction – leaving the construction site and building broom clean. Failure to do so will result in a back charge to the contractor, with the work completed by others.

6. When necessary, the contractor shall provide and install protective covering(s) for surfaces that are subject to damage of any type.

7. Consumption or possession of alcoholic beverages and/or controlled substances in the building is prohibited. Violators will be removed from property.

8. No space other than the construction site shall be provided to the contractor for storage, staging, finishing or an office unless coordinated with the landlord.

9. Coordinate any construction needs for power, phone, lighting, etc. with landlord prior to bidding.

10. Where pipes, conduits or low tension wiring penetrates a fire-rated enclosure, such as wall or slab, the space around such penetration shall not exceed ¼" and shall be packed solid with mineral wool or equal and then closed off with a tight fitting escutcheon or equal on both sides of the rated enclosure to insure full fire-rating in compliance with the building code.

11. Where existing fireproofing has been removed at columns or beams, new fireproofing shall be installed to comply with the required fire-rating.

12. All finish surfaces shall have a flame spread rating equal to or better than that required by the building.

SHOP DRAWINGS

The contractor shall first review, add required field dimensions, stamp and then forward all shop drawings and samples to architect for approval. All finishes, millwork, exposed items or equipment, doors, frames and hardware, etc. must be submitted for review and written approval.

Prior to the start of construction of any items and or the ordering of any and all finish materials, the contractor shall submit to the designer, with an accompanying transmittal, one (1) original and one (4) copies of required shop drawings and no fewer than three (3) 3" x 3" samples of the item or from the dye lot of the finish material to be installed, for the review and written approval of the designer. The contractor must contact the architect prior to installation if the item does not match the approved sample.

No substitutions will be allowed without prior written approval.

Any changes in the shop drawings from design or specifications indicated in this set must be noted to the architect for approval. Any item clearly different than the design indicated in this set may be rejected in the field at suppliers cost even with approved shop drawings.

Proof of certificate of all necessary insurance shall be filed with landlord/tenant to indemnify and hold harmless the owner, landlord, tenant, architect and agents thereof from damages and losses resulting from contractors execution of work.

Payment: Work shall not proceed by contractor or supplier in which he expects additional compensation beyond the written contract without written authorization from the tenant, construction manager and architect.

Design: Work shall not proceed by contractor or supplier that changes the design intent without the written authorization from the tenant, construction management and architect.

These drawings represent the visual design intent as expressed by the designer. In no way are they meant to direct the contractor in matters pertaining to structural performance, framing, supports, code compliance, manufacturers instructions, millwork construction, etc. The contractor is fully responsible for structural integrity and performance of all items called for in these drawings. Contact architect with any conflicts.

Contractor shall not allow debris to accumulate, remove and dispose of all debris caused by demolition/construction – leaving the construction site and building broom clean. Failure to do so will result in a back charge to the contractor, with the work completed by others.

Any damage caused by the contractor to be building and it's system(s) are to be repaired immediately after receiving notice. Failure to do so will result in a back charge to the contractor, with the work completed by others.

When necessary, the contractor shall provide and install protective covering(s) for surfaces that are subject to damage of any type.

This building is a smoke free environment. No smoking is allowed in the building.

Consumption or possession of alcoholic beverages and/or controlled substances in the building is prohibited. Violators will be removed from property.

Coordinate any construction needs for power, phone, lighting, etc. with landlord prior to bidding.

Where pipes, conduits or low tension wiring penetrates a fire-rated enclosure, such as wall or slab, the space around such penetration shall not exceed ¼" and shall be packed solid with mineral wool or equal and then closed off with a tight fitting escutcheon or equal on both sides of the rated enclosure to insure full fire-rating in compliance with the building code.

Where existing fireproofing has been removed at columns or beams, new fireproofing shall be installed to comply with the required fire-rating.

All finish surfaces shall have a flame spread rating equal to or better than that required by the building.

A SIGN WHICH DOES NOT COMPLY WITH ALL THE REQUIREMENTS OF THE ADMINISTRATIVE CODE AND ZONING RESOLUTION SHALL NOT BE ERECTED OR MAINTAINED. SIGNS WHICH MAY BE ERECTED SHALL BE MADE SECURE, NEATLY LETTERED AND PROPERLY MAINTAINED.

AN OPEN PARKING LOT SHALL BE OCCUPIED AND USED FOR THE PURPOSE STATED ON THE CERTIFICATE OF OCCUPANCY; NO OTHER USE, OCCUPANCY OR SERVICE SHALL BE CONDUCTED ON THE PREMISES.

SPACE USED FOR PARKING SHALL BE ENTIRELY WITHIN THE LOT LINES OF THE PREMISES. VEHICLES SHALL NOT ENCROACH ON THE SIDEWALKS.

EVERY PARKING LOT SHALL BE MAINTAINED IN A CLEAN AND SANITARY CONDITION. THE ACCUMULATION OF RUBBISH OR THE STORAGE OF ANY KIND OF JUNK OR WASTE IS PROHIBITED. WHERE A WOOD FRAME SHELTER, WOOD FENCE OR RAILING ARE PERMITTED THEY SHALL BE PAINTED IN A NEAT, WORKMANLIKE MANNER AND SHALL BE PROPERLY MAINTAINED .

BUMPERS SHALL BE SITUATED NOT LESS THAN ONE FOOT FROM ADJACENT PROPERTY LINES WHEN VEHICLES ARE PARKED PARALLEL TO SUCH ADJACENT PROPERTY LINES. BUMPERS SHALL BE SITUATED NOT LESS THAN 4"-0" FROM ADJACENT PROPERTY LINES WHEN PARKED OTHER THAN PARALLEL TO SUCH ADJACENT PROPERTY LINES.

OPEN PARKING LOTS WHICH ARE TO BE OPERATED DURING ANY PORTION OF THE TIME FROM 6pm THROUGH 6am SHALL BE ADEQUATELY ILLLUMINATED AND THE MINIMUM ILLUMINATION SHALL BE 1/10th OF ONE WATT PER SQ. FOOT OF PARKING AREA, DISTRIBUTED OVER THE ENTIRE AREA. LIGHTS SHALL BE PROVIDED WITH REFLECTORS ARRANGED SO THAT THE ILLUMINATION IS DIRECTED DOWNWARD AND AWAY FROM ADJACENT BUILDINGS. FLOODLIGHTS MAY ALSO BE USED WHERE SUCH FLOODLIGHTS DO NOT PROJECT LIGHT UPON ADJACENT OR NEARBY PROPERTY. REFER TO PARKING LIGHT LIGHTING PLAN PREPARED BY OTHHERS

ELEVATORS 14240 – Guide Specifications for Hydraulic Elevators

SECTION 14240 HYDRAULIC ELEVATORS

PART 1 – GENERAL

1.02 REFERENCES

A. Comply with applicable building codes and elevator codes at the project site, including but not limited to the following:
1. ANSI A117.1, Buildings and Facilities, Providing Accessibility and Usability for Physically Handicapped People.
2. ADAAG, Americans with Disabilities Act Accessibility Guidelines.
3. ANSI/NFPA 70, National Electrical Code.
4. ANSI/NFPA 80, Fire Doors and Windows.
5. ASME/ANSI A17.1, Safety Code for Elevators and Escalators.
6. ANSI/UL 10B, Fire Tests of Door Assemblies.
7. CAN/CSA C22.1, Canadian Electrical Code.
8. CAN/CSA-B44, Safety Code for Elevators and Escalators.
9. Model Building Codes.
10. All other local applicable codes.

1.03 SYSTEM DESCRIPTION: Elevator Arrangement

A. Performance Requirements for Elevators:

1. Quantity & Elevator Numbers: 1 – LVMT2100 passenger elevators with simplex operation
2. Type: Twin telescopic hydraulic cylinders without well holes
3. Number of Stops 3
4. Number of Openings: 3 at Front
5. Rise: 25.75'. Refer to building sections
6. Rated Capacity/Speed
   2100 pounds, 100 fpm
7. Minimum Car Inside: 5' 8" wide x 4' 3" deep
8. Inside Cab Height: 8'0"
   Height Under Ceiling: 7' 4 1/2"
9. Entrance Width & Type: Single-Slide Door 3' 0" x 7' 0" or 8' 0"
10. Main Power Supply: 208 Volts + or – 5% of normal, 3 Phase, with a separate equipment grounding conductor.
11. Lighting Power Supply: 120 Volts, 1 Phase, 15 Amp, 60 Hz.
12. Stopping Accuracy: ±1/4" (6.4 mm) under any loading condition or direction of travel.
13. Door Opening Time for 7ft. painted hoistway and car doors: 3.5 seconds – Single Slide 36" door

B. Simplex Collective Operation: Using a microprocessor-based controller, operation shall be automatic by means of the car and hall buttons. If all calls in the system have been answered, the car shall park at the last landing served.

C. Provide microprocessor-based control system with utilizes on-board diagnostics for servicing, trouble-shooting, and adjusting without requiring the use of an outside service tool. If an on-board diagnostic system is not provided, a handheld service tool (or laptop), owner's license, operation manual, and tool instructions must be provided in addition to the control system.

D. Car Operating Features
1. Full Collective Operation.
2. Single Speed Fan.
3. On/Off Light Switch.
4. Solid State Starting
5. Remote elevator monitoring REM ready.
6. Car-Stall Protection.
7. Firefighters' Service Phase I and Phase II
8. Top of Car Inspection.

E. Door Control Features:
1. Closed Loop Door Operator is a closed loop, microprocessor based door operator system. The door operator will facilitate smooth operation under varying environmental influences such as, temperature, wind, friction, and component variation. The processor will monitor the door's actual position and velocity compared to its desired position and velocity. If variations are detected in the profile the command will be automatically corrected. The Closed Loop Door Operator control system shall not require machine room door control equipment.
2. Door control to open doors automatically when car arrives at a landing in response to a normal hall or car call.
3. Door control to open doors automatically when car arrives at a landing in response to a normal hall or car call.

Elevator doors shall be provided with a reopening device that will stop and reopen the car door(s) and hoistway door(s) automatically should the door(s) become obstructed by an object or person.

Primary door protection shall consist of a two dimensional, multi-beam array projecting across the car door opening. Under normal operation and for any door position, the system shall detect as a blockage an opaque object that is equal to or greater than 1.3 inches (33 mm) in diameter when inserted between the car doors at vertical positions from within 1 inch (25 mm) above the sill to 71 inches (1800 mm) above the sill. Under degraded conditions (one or more blocked or failed beams), the primary protection shall detect opaque objects that are equal to or greater than 4" (100 mm) in diameter for the same vertical coverage. If the system performance is degraded to the point that the 4" object cannot be detected, the system shall maintain the doors open or permit closing only under nudging force conditions.

The door reopening device shall also include a secondary, three dimensional, triangular infrared multi-beam array projecting across the door opening and extending into the hoistway door zone. The door opening device will cause the doors to reopen when it detects a person(s) or object(s) entering or exiting the car in the area between the hoistway doors or the entryway area adjacent to the hoistway doors.

The size of the secondary protection zone shall vary as the door positions vary during opening and closing. The width of the zone shall be approximately one-third the size of the separation between the doors (or door and strike plate for single-slide doors) and shall be approximately centered in the door separation. In order to minimize detection of hallway passers-by who are not entering the elevator, the maximum zone penetration into the entryway shall not exceed 20" for any door separation. Normal penetration depth into the entryway from the car doors shall be ~14" for a door separation of 42". The penetration shall reduce proportionally as the doors close. At door separations of 18" or less the secondary protection system may cease its normal operation since the depth of the zone recedes to where it is inside the hoistway doors. The vertical coverage of the secondary protection shall be ~19" (480 mm) above the sill to ~55" (1400 mm)above the sill (mid-thigh to shoulder of a typical adult).

The secondary protection shall have an anti-nuisance feature which will ignore detection in the secondary zone after continual detection occurs for a significant time period in the secondary zone without corresponding detection in the primary protection zone; i.e. a person/object is in the entryway but does not enter. Normal secondary protection shall be re-enabled whenever a detection occurs in the primary zone.

The reaction time of the door detector sub-system shall not exceed 60 milliseconds when both primary and secondary protection capabilities are active; nor 40 milliseconds when the secondary protection is disabled.

4. Door nudging operation to occur if doors are prevented from closing for an adjustable period of time.

F. Provide equipment according to Seismic zone: 2

1.04 SUBMITTALS

A. Product Data: Submit manufacturer's product data for each system proposed for use. Include the following:
1. Signal and operating fixtures, operating panels and indicators.
5. Cab design, dimensions and layout.
6. Hoistway-door and frame details.
7. Electrical characteristics and connection requirements.
8. Expected heat dissipation of elevator equipment in machine room (BTU).

B. Shop Drawings: Submit approval layout drawings. Include the following:
1. Car, guide rails, buffers and other components in hoistway.
2. Maximum rail bracket spacing.
3. Maximum loads imposed on guide rails requiring load transfer to building structure.
4. Loads on hoisting beams.
5. Clearances and travel of car.
6. Clear inside hoistway and pit dimensions.
7. Location and sizes of access doors, hoistway entrances and frames.

C. Operations and Maintenance Manuals: Provide manufacturer's standard operations and maintenance manual.

1.05 QUALITY ASSURANCE

A. Manufacturer: Provide elevators manufactured by a firm with a minimum of 10 years experience in fabrication of elevators equivalent to those specified. Elevator manufacturer shall be ISO9001 certified.

B. Installer: Elevators shall be installed by the manufacturer.

C. Regulatory Requirements: Elevator system design and installation shall comply with the latest versions of ASME A17.1
1. Elevator shall be designed in response to Americans with Disabilities Act Accessibility Guidelines (ADAAG).

D. Permits and Inspections: Provide licenses and permits and perform required inspections and tests.

1.06 DELIVERY, STORAGE AND HANDLING

A. Should the building or the site not be prepared to receive the elevator equipment at the agreed upon date, the General Contractor will be responsible to provide a proper and suitable storage area on or off the premises.
Should the storage area be off-site and the equipment not yet delivered, then the elevator contractor, upon notification from the General Contractor, will divert the elevator equipment to the storage area. If the equipment has already been delivered to the site, then the General Contractor shall transport the elevator equipment to the storage area. The cost of elevator equipment taken to storage by either party, storage, and redeliver to the job site shall not be at the expense of the elevator contractor.

1.07 WARRANTY

The elevator contractor's acceptance is conditional on the understanding that their warranty covers defective material and workmanship. The guarantee period shall not extend longer than one (1) year from the date of completion or acceptance thereof by beneficial use, whichever is earlier, of each elevator. The guarantee excludes ordinary wear and tear or improper use, vandalism, abuse, misuse, or neglect or any other causes beyond the control of the elevator contractor and this express warranty is in lieu of all other warranties, express or implied, including any warranty of merchantability or fitness for a particular purpose.

1.08 MAINTENANCE SERVICE

A. Maintenance service consisting of regular examinations, adjustments and lubrication of the elevator equipment shall be provided by the elevator contractor for a period of twelve (12) months after the elevator has been turned over for the customer's use. This service shall not be subcontracted but shall be performed by the elevator contractor. All work shall be performed by competent employees during regular working hours of regular working days and shall include emergency 24-hour callback service. This service shall not cover adjustments, repairs or replacement of parts due to negligence, misuse, abuse or accidents caused by persons other than the elevator contractor. Only genuine parts and supplies as used in the manufacture and installation of the original equipment shall be provided.

PART 2 – PRODUCTS

2.01 ACCEPTABLE MANUFACTURER

A. Provide hydraulic elevators by Otis Elevator Company or approved equal.
Otis Contact: Sherri Rasmussen, sherri.rasmussen@otis.com 516-576-5975

2.02 EQUIPMENT: MACHINE ROOM COMPONENTS

A. The hydraulic system shall be of compact design suitable for operation under the required pressure. The power component shall be mounted in the hydraulic-fluid storage tank. The control valve shall control flow for up and down directions hydraulically and shall include an integral check valve. A control section including control solenoids shall direct the main valve and control: up and down starting, acceleration, transition from full speed to leveling speed, up and down stops, pressure relief and manual lowering. All of these functions shall be fully adjustable for maximum smoothness and to meet contract conditions. System to be provided with a muffler, low-pressure switch and a shut-off valve.

B. A microprocessor-based controller shall be provided, including necessary starting switches together with all relays, switches, solid-state components and hardware required for operation, including door operation, as described herein. A three (3) phase overload device shall be provided to protect the motor against overloading.

C. A manual lowering feature shall permit lowering the elevator at slow speed in the event of power failure or for adjusting purposes.

2.03 EQUIPMENT: HOISTWAY COMPONENTS

A. Plunger(s) and Cylinder(s): Each cylinder shall be constructed of steel pipe of sufficient thickness and suitable for the operating pressure. The top of each cylinder shall be equipped with a cylinder head with a drip ring to collect any oil seepage as well as an internal guide ring and self-adjusting packing. Each plunger shall be constructed of selected steel tubing or pipe of proper diameter machined true and smooth with a fine polished finish. Each plunger shall be provided with a stop ring electrically welded to it to prevent the plunger from leaving the cylinder. Each plunger and cylinder shall be installed plumb and shall operate freely with minimum friction.

B. Car Guide Rails: Tee-section steel rails with brackets and fasteners.

C. Spring Buffer: Helical coil spring type.

D. Wiring: Wiring for hoistway electrical devices included in scope of the elevator system, hall panels, pit emergency stop switch, and the traveling cable for the elevator car.

E. Hoistway Entrances
1. Frames: Entrance frames shall be of bolted construction for complete one-piece unit assembly. All frames shall be securely fastened to fixing angles mounted in the hoistway and shall be UL fire rated steel. Additional sill angle support will be provided with 4'0" and 4'6" two speed opening door arrangements (4500 & 5000 lb. cars). Sills shall be extruded aluminum
2. Doors: Entrance doors shall be of metal construction with vertical channel reinforcements.
3. Fire Rating: Entrance and doors shall have a UL 1-1/2 hour fire protection rating.
4. Entrance Finish: satin stainless steel
5. Entrance Markings: Entrance jambs shall be marked with 4" x 4" (102 mm x 102 mm) plates having raised floor markings with Braille adjacent. Markings shall be provided on both sides of the entrance.
6. Sight Guards: Black sight guards will be furnished.

2.04 EQUIPMENT: CAR COMPONENTS

A. Car Frame: A suitable car frame shall be provided with adequate bracing to support the platform and car enclosure. The buffer striking plate on the underside of the car-frame platform assembly must fully compress the spring buffer mounted in the pit before the plunger reaches its lower limit of travel.

B. Platform, Heavy Loading Type: The car platform shall be arranged to accommodate one-piece loads weighing up to 25% of the rated capacity, such as wheeled food carts, stretchers, x-ray equipment, etc. The platform shall be recessed 5/16" for flooring by others.

C. Vertical Light-Weight [Series 1] Cab walls to have attached vertical non-removable panels, laminated front and back with plastic laminate.

D. Car Front Finish: satin stainless steel

D1. Car Door Finish: satin stainless steel

E. Car top to be of wood material clad on both sides with a natural finish aluminum panel.

F. Ceiling Type: Aluminum Eggcrate [DC22E Ceiling] suspended ceiling shall consist of aluminum eggcrate diffusers set in frame of extruded aluminum with fluorescent lighting fixtures.

G. Emergency Car Lighting: An emergency power unit employing a 6 volt, sealed rechargeable battery and totally static circuits shall be provided to illuminate the elevator car and provide current to the emergency siren in the event of building power failure.

H. Emergency Pulsating Siren: Siren mounted on top of the car that is activated when the Alarm button in the car operating panel is engaged. Siren shall have a rated sound pressure level of 80 dba at a distance of 3.0 m from the device. Siren shall respond with a delay of not more than 1 second after the switch or push button has been pressed

I. Exhaust Fan: An exhaust fan shall be mounted on the car top.

J. Utility Outlet: A 125V 15 amperes utility outlet with ground-fault circuit-interrupter protection shall be furnished on top of the cab.

K. Handrail: Rectangular Tubular Metal Bar [DH50 Handrails] 1/2" x 1-1/2" satin finish stainless steel provided on the sides and rear of the car enclosure.

L. Threshold: aluminum

2.05 EQUIPMENT: SIGNAL DEVICES AND FIXTURES

A. Car Operating Panel: A car operating panel shall be provided which contains all push buttons, key switches, and message indicators for elevator operation. The car operating panel shall have a satin stainless steel finish.
1. Flat, applied car operating panel shall be furnished. It shall contain a bank of round metal (plastic when required by some local California codes) mechanical illuminated buttons. Flush mounted to the panel and marked to correspond to the landings served, an emergency call button, door open and door close buttons, and switches for lights, inspection and the exhaust fan. Pan shaped design is not acceptable. The emergency call button shall be connected to a bell that serves as an emergency signal. All buttons to have raised numerals and Braille markings. Red LED halo illumination with Flat Flush. Target finishes: satin stainless steel

The car operating panel shall be equipped with the following features:
Standard:
1) Raised markings and Braille shall be provided to the left hand side of each push-button.
2) Car Position Indicator at the top of and integral to the car operating panel.
3) Door open and door close buttons.
4) Light key-switch.
5) Fan key-switch.
6) Inspection key-switch.
7) Elevator Data Plate marked with elevator capacity and car number.
8) Illuminated alarm button with raised markings.
9) In car stop switch
10) Firefighter's hat
11) Firefighter's Phase II Key-switch
12) Call Cancel Button

B1. Car Position Indicator: A digital, LED car position indicator shall be integral to the car operating panel.

B. Hall Fixtures: Hall fixtures shall be provided with necessary push buttons and key switches for elevator operation. Hall fixtures shall have round metal mechanical buttons in flush mount face frame. Buttons shall be flat flush in vertically mounted fixture.

C. Car Lantern and Chime: A directional lantern visible from the corridor shall be provided in the car entrance. When the car stops and the doors are opening, the lantern shall indicate the direction in which the car is to travel and a chime will sound.
Access key-switch at top floor in entrance jamb.

D. Access key-switch at lowest floor in entrance jamb.

PART 3 – EXECUTION

3.01 PREPARATION

A. Take field dimensions and examine conditions of substrates, supports, and other conditions under which this work is to be performed. Do not proceed with work until unsatisfactory conditions are corrected.

3.02 INSTALLATION

A. Installation of all elevator components except as specifically provided for elsewhere by others.

3.03 DEMONSTRATION

A. The elevator contractor shall make a final check of each elevator operation with the Owner or Owner's representative present prior to turning each elevator over for use. The elevator contractor shall determine that control systems and operating devices are functioning properly.

No.	Revisions	Date
1	Issued for Client Review	12/22/2011
2	Issued paperwork	01/09/2012
3	Answered DoB obj.	04/06/2012
4	For estimating only	09/13/2012
5	Issued for DoB appr	10/22/2012
6	Adjusted stair enclosure	1/16/2012

DOB Examiner stamp:

DOB Approval:

B-Scan job sticker:

The architect shall not have control or charge of and shall not be responsible for construction means, methods, deviations, techniques, sequences, or procedures, or for safety precautions and programs in connection with the work, for the acts or omissions of the contractor, subcontractors or any other persons performing any of the work, or for the failure of any of them to carry out the work in accordance with the contract documents. Always use dimensions as shown. Drawings are not to be scaled.

rampulla associates architects, l.l.p.
155 3rd street S.I., N.Y., 10306
• 718 987-1310 • fax 718-987-1565
www.rampulla.net

project title :
PROPOSED WOODROW SHOPPING CENTER
1243 WOODROW ROAD
STATEN ISLAND, NEW YORK

BUILDING B

drawing title :
GENERAL NOTES

seal & signature

date:	7.22.11
project #:	10009
drawing by:	RD
chk by:	RD
dwg #:	A-014.00
file #:	

APPENDIX 2

PREVIOUS ENVIRONMENTAL INVESTIGATIONS AND REPORTS - See Remedial Investigation Report (RIR)

APPENDIX 3
SOIL/MATERIALS MANAGEMENT PLAN

1.1 STOCKPILE METHODS

Excavation and grading on-Site would be completed to construct the subgrade parking area and to level the Site for construction purposes.Stockpiles, which will be onsite, will be used only when necessary and will be removed as soon as practicable.

All stockpile activities will be compliant with applicable laws and regulations. Soil stockpile areas will be appropriately graded to control run-off in accordance with applicable laws and regulations. Stockpiles of excavated soils and other materials shall be located at least of 50 feet from the property boundaries, where possible. Hay bales or equivalent will surround soil stockpiles except for areas where access by equipment is required. Silt fencing and hay bales will be used as needed near catch basins, surface waters and other discharge points.

1.2 CHARACTERIZATION OF EXCAVATED MATERIALS

Soil/fill or other excavated media that is transported off-Site for disposal will be sampled in a manner required by the receiving facility or site, and in compliance with applicable laws and regulations. Soils proposed for reuse on-Site will be managed as defined in this plan.

1.3 MATERIALS EXCAVATION, LOAD-OUT AND DEPARTURE

The PE/QEP overseeing the remedial action will:

- ensure that there is a party responsible for the safe execution of invasive and other work performed under this work plan;
- ensure that all loaded outbound trucks are inspected and cleaned if necessary before leaving the Site;
- ensure that all egress points for truck and equipment transport from the Site will be kept clean of Site-derived materials during Site remediation.

Locations where vehicles exit the Site shall be inspected daily for evidence of soil tracking off premises. Cleaning of the adjacent streets will be performed as needed to maintain a clean condition with respect to Site-derived materials.

Open and uncontrolled mechanical processing of historical fill and contaminated soil on-Site will not be performed without prior OER approval.

1.4 OFF-SITE MATERIALS TRANSPORT

Loaded vehicles leaving the Site will comply with all applicable materials transportation requirements (including appropriate covering and placards) in accordance with applicable laws and regulations.If loads contain wet material capable of causing leakage from trucks, truck liners will be used. Queuing of trucks will be performed on-Site, when possible in order to minimize off-Site disturbance. Off-Sitequeuing will be minimized.

Truck routing will take into account the following factors: (a) limiting transport through residential areas and past sensitive sites; (b) use of mapped truck routes; (c) minimizing off-Site queuing of trucks entering the facility; (d) limiting total distance to major highways; (e) promoting safety in access to highways; and (f) overall safety in transport. To the extent possible, all trucks loaded with Site materials will travel from the Site using these truck routes. Trucks will not stop or idle in the neighborhood after leaving the project Site.

1.6 MATERIALS DISPOSAL OFF-SITE

If disposal of soil/fill from this Site is proposed for unregulated disposal (i.e., clean soil removed for development purposes), including transport to a Part 360-16 Registration Facility, a formal request will be made for approval by OER with an associated plan compliant with 6NYCRR Part 360-16. This request and plan will include the location, volume and a description of the material to be recycled, including verification that the material is not impacted by site uses and that the material complies with receipt requirements for recycling under 6NYCRR Part 360.

1.5 MATERIALS REUSE ON-SITE

Soil and fill derived from the property meets the soil cleanup objectives established in this plan and therefore, may be reused on-Site. Reuse on-Site means material that is excavated

during the remedy or development, does not leave the property, and is relocated within the same property and on comparable soil/fill material, and addressed pursuant to the NYC VCP agreement subject to Engineering and/or Institutional Controls.As stated above, on-Site soil has been confirmed to meet the Track 2 SCOs, which are proposed for this Site. As such and based on the intended Site use, no segregation of soil is necessary. Some of the excavated soil is anticipated to be used to grade portions of the Site and to construct parking areas.

Organic matter (wood, roots, stumps, etc.) or other waste derived from clearing and grubbing of the Site will not be buried on-Site. Soil or fill excavated from the site for grading or other purposes will not be reused within a cover soil layer or within landscaping berms.

1.6 FLUIDS MANAGEMENT

All liquids to be removed from the Site, will be handled, transported and disposed in accordance with applicable laws and regulations. Liquids discharged into the New York City sewer system will receive prior approval by New York City Department of Environmental Protection (NYC DEP).The NYC DEP regulates discharges to the New York City sewers under Title 15, Rules of the City of New York Chapter 19. Discharge to the New York City sewer system will require an authorization and sampling data demonstrating that the groundwater meets the City's discharge criteria. The dewatering fluid will be pretreated as necessary to meet the NYC DEP discharge criteria. If discharge to the City sewer system is not appropriate, the dewatering fluids will be managed by transportation and disposal at an off-Site treatment facility.

Discharge of water generated during remedial construction to surface waters (i.e. a stream or river) is prohibited without a SPDES permit issued by New York State Department of Environmental Conservation.

1.8 STORM-WATER POLLUTION PREVENTION

Applicable laws and regulations pertaining to storm-water pollution prevention will be addressed during the remedial program. Erosion and sediment control measures identified in this RAWP (silt fences and barriers, and hay bale checks) will be installed around the entire perimeter of the remedial construction area and inspected once a week and after every storm event to ensure that they are operating appropriately. Discharge locations will be inspected to

determine whether erosion control measures are effective in preventing significant impacts to receptors. Results of inspections will be recorded in a logbook and maintained at the Site and available for inspection by OER. All necessary repairs shall be made immediately. Accumulated sediments will be removed as required to keep the barrier and hay bale check functional. Undercutting or erosion of the silt fence toe anchor will be repaired immediately with appropriate backfill materials. Manufacturer's recommendations will be followed for replacing silt fencing damaged due to weathering.

1.9 CONTINGENCY PLAN

This contingency plan is developed for the remedial construction to address the discovery of unknown structures or contaminated media during excavation. Identification of unknown contamination source areas during invasive Site work will be promptly communicated to OER's Project Manager. Petroleum spills will be reported to the NYS DEC Spill Hotline. These findings will be included in the daily report. If previously unidentified contaminant sources are found during on-Site remedial excavation or development-related excavation, sampling will be performed on contaminated source material and surrounding soils and reported to OER. Chemical analytical testing will be performed for TAL metals, TCL volatiles and semi-volatiles, TCL pesticides and PCBs, as appropriate.

1.10 DUST AND NUISANCE CONTROL

Dust Control

Dust management during invasive on-Site work will include, at a minimum:

- Use of a dedicated water spray methodology for roads, excavation areas and stockpiles.
- Use of properly anchored tarps to cover stockpiles.
- Exercise extra care during dry and high-wind periods.
- Use of gravel or recycled concrete aggregate on egress and other roadways to provide a clean and dust-free road surface.

This dust control plan is capable of controlling emissions of dust. If nuisance dust emissions are identified, work will be halted and the source of dusts will be identified and corrected. Work will not resume until all nuisance dust emissions have been abated. OER will be notified of all dust complaint events. Implementation of all dust controls, including halt of work, will be the responsibility of the PE/QEP's responsible for certifying the Remedial Action Report.

Other Nuisances

Noise control will be exercised during the remedial program. All remedial work will conform, at a minimum, to NYC noise control standards.

Rodent control will be provided, during Site clearing and grubbing, and during the remedial program, as necessary, to prevent nuisances.

APPENDIX 4

HEALTH AND SAFETY PLAN

Construction Health and Safety Plan
(CHASP)

Woodrow Plaza
1243-1275 Woodrow Road
Staten Island, New York
NYC BCP Number: 12RH-A148R

Submitted to:
New York City Office of Environmental Remediation
253 Broadway, 14th Floor
New York, NY 10007

Woodrow Plaza, LLC
15 Sequine Avenue
Staten Island, New York 10013

February 2013

Table of Contents

1. Background Information 4
1.1 General 4
1.2 Property Description 4
1.3 Site Activities 5
1.4 Hazard/Risk Analysis 5
1.4.1 Physical Hazards 5
1.4.2 Fire and Explosion 5
1.4.3 Cold Stress 5
1.4.4 Heat Stress 6
1.4.5 Noise 6
1.4.6 Hand and Power Tools 6
1.4.7 Slips, Trips, and Falls 7
1.4.8 Manual Lifting 7
1.4.9 Projectile Objects, Debris and Overhead Dangers 8
1.4.10 Heavy Equipment Operation 8
1.4.11 Confined Spaces 8
1.4.12 Illumination 8
1.4.13 Lockout/Tagout 9
1.4.14 Fall Hazards 9
1.4.15 Ladder Safety 10
1.4.16 Scaffolding Safety 10
1.4.17 Welding 10
1.4.18 Asbestos-Containing Material 11
1.5 Evaluation of Potential Chemical Hazards 14
1.5.1 Volatile Organic Compounds (VOCs) 14
1.5.2 Metals 15
1.5.3 Asbestos Containing Materials 16
1.5.4 Evaluation of Organic Vapor and Dust Exposure 16
1.6 Biological Hazards 19
1.6.1 Animals 19
1.6.2 Insects 19
1.6.2.1 Tick Borne Illnesses 19
1.6.2.2 Wasps and Bees 21
1.6.3 Plants 22
1.7 Sun Exposure 22
1.8 Personal Safety 22

2. Air Monitoring 24

3. Project Personnel/Responsibilities and Lines of Authority 26
3.1 Construction Manager (CM) 26

3.2 Construction Health and Safety Officer (CHSO) 26
3.3 Site Safety Officer (SSO) 27
3.4 Field Representative (FR) 27

4. Subcontractors 28

5. Emergency Contact List 29

6. Training Program 30
6.1 Hazard Communication 30
6.2 Onsite Safety Briefings 30

7. Medical Support 31

8. Personal Protective Equipment 32

9. Supplemental Contingency Plan Procedures 34
9.1 Fire 34
9.2 Severe Weather 34
9.3 Spills or Material Release 34
9.4 Alcohol and Drug Abuse Prevention 34

10. Decontamination Procedures 35
10.1 Personnel Decontamination Station 35
10.2 Decontamination Equipment Requirements 35

Construction Health and Safety Plan Sign-Off 36

Appendices
Appendix A Site-Specific Information
Appendix B Cold Stress Guidelines
Appendix C Heat Stress Guidelines
Appendix D Safety Data Sheets (SDSs)
Appendix E Incident Reporting Form

H:\WPROC\Project\Woodrow Plaza LLC\Woodrow Plaza CHASP.docx

1. Background Information

1.1 General

Project Name 1243-1275 Woodrow Road
Staten Island, New York
NYC BCP No. 12RH-A148R
Herein referred to as the Site

This Construction Health and Safety Plan (CHASP) establishes policies and procedures to minimize injuries to construction and labor staff (herein referred to as the Construction Manager, or CM) and subcontractor personnel from the potential hazards posed by the activities at 1243-1275 Woodrow Road (the Site) located in Staten Island, New York (see **Appendix A** – Site-Specific Information).

Reading of and adherence to the CHASP is required of all onsite CM Contractor personnel. Subcontractors for this project may be required to develop their own CHASP for protection of their employees, but at a minimum must adhere to applicable requirements set forth in this CHASP. Additionally, federal, state and local representatives may be required to sign and adhere to this CHASP, depending on the nature of their presence onsite during activities conducted by the CM Contractor.

The plan identifies measures to minimize accidents and injuries, which may result from project activities, emergencies, or during adverse weather conditions. Activities performed under this CHASP will comply with applicable parts of OSHA Regulations, primarily 29 Code of Federal Regulations (CFR) Part 1926.

Included in **Appendix A** is a route to the nearest medical facility to the site with directions and contact information. **Appendix B and C** details the signs, symptoms, care and procedures to both heat and cold stress. Safety data sheets specific to chemicals that may be encountered while working at the site are included in **Appendix D**.

1.2 Property Description

The Site is located at 1243-1275 Woodrow Road in the Rossville neighborhood section in the borough of Staten Island, New York and is identified as Block 6145 and Lots 13 & 16 on the New York City Tax Map. Figure 1 shows the Site location. The Site is 79,626-square feet and is bounded by a retail shopping center to the north, Woodrow Road to the south, Alverson Avenue to the east, and Rossville Avenue to the west. Currently, the Site is a vacant wooded lot, with dense understory vegetation and numerous mature trees. Remnants of a former building slab were observed on the north side of the property.

1.3 Site Activities

The proposed future use of the Site will consist of 2-2 story commercial and retail buildings with parking below grade and at grade. The current zoning designation is R3X residential with a C2-2 overlay (commercial). The proposed use is consistent with existing zoning for the property. The proposed use of the vacant property is to construct two, two-story commercial use buildings on the site. Parking for vehicles would be beneath both buildings and in spaces provided on site. Excavation and grading on site would be completed to construct the subgrade parking area. Onsite fill would be used to grade and level areas of the site and to construct additional parking spaces. Groundwater was encountered at elevation +/- 60 feet MSL. The maximum proposed cut in elevation would be to 102'MSL or 50+ feet above the existing groundwater table. Site work will consist of:

- Foundation excavation, loading and removal of site soils
- Site grading
- Building construction

1.4 Hazard/Risk Analysis

1.4.1 Physical Hazards

Physical hazards associated with heavy equipment operations may be present during site activities. These activities would require the use of heavy equipment by subcontractors such as a backhoe or a drill rig, which is associated with, but not limited to, the following hazards:

- bodily injuries
- slipping, tripping or falling
- heavy lifting
- caught in-between injuries
- struck by injuries
- cold/heat stress
- noise

1.4.2 Fire and Explosion

Fire extinguishers are located on heavy equipment operating onsite and within any work vehicles onsite. All fires should be reported to 911 emergency services. The CM Contractor and the Construction Health & Safety Officer (CHSO) will determine if it is necessary to shut down site work for the day due to fire related issues.

1.4.3 Cold Stress

During the winter months, workers may be exposed to the hazards of working in cold environments. Potential hazards in cold environments include frostbite, trench foot or immersion foot, hypothermia as well as slippery surfaces, brittle equipment, and poor judgment. The procedures to be followed regarding the avoidance of cold stress are provided in **Appendix B** – Cold Stress Guidelines.

1.4.4 Heat Stress

A heat stress prevention program will be implemented when ambient temperatures exceed 70ºF. The procedures to be followed are provided in **Appendix C** – Heat Stress Guidelines.

1.4.5 Noise

Noise is a potential hazard associated with the operation of heavy equipment, power tools, pumps, generators, and other equipment associated with earthwork tasks. Site workers who will perform suspected or established high noise tasks and operations shall wear hearing protection. Other workers who do not need to be in proximity of the noise should distance themselves from the equipment generating the noise.

1.4.6 Hand and Power Tools

In order to complete the various tasks for the project, personnel will use hand and power tools. The use of hand and power tools can present a variety of hazards, including physical harm from being struck by flying objects, being cut or struck by the tool, fire, and electrocution. Work gloves, safety glasses, and hard hats will be worn by the operating personnel at all times when using hand and power tools. Ground Fault Circuit Interrupter (GFCI)-equipped circuits will be used for all power tools.

The CM Contractor is responsible for the safe condition of tools and equipment used by employees but the employees have the responsibility for properly using and maintaining tools.

Saw blades, knives, or other tools be directed away from aisle areas and other employees working in close proximity. Knives and scissors must be sharp. Dull tools can be more hazardous than sharp ones.

Appropriate personal protective equipment (PPE), e.g., safety goggles, gloves, etc., should be worn due to hazards that may be encountered while using portable power tools and hand tools. Floors must be kept as clean and dry as possible to prevent accidental slips with or around dangerous hand tools.

Around flammable substances, sparks produced by iron and steel hand tools can be a potential ignition source. Where this hazard exists, spark-resistant tools made from brass, plastic, aluminum, or wood will provide for safety.

The following general precautions should be observed by power tool users:

- Never carry a tool by the cord or hose.
- Never yank the cord or the hose to disconnect it from the receptacle.
- Keep cords and hoses away from heat, oil, and sharp edges.
- Disconnect tools when not in use, before servicing, and when changing accessories such as blades, bits and cutters.
- All observers should be kept at a safe distance away from the work area.
- Secure work with clamps or a vise, freeing both hands to operate the tool.
- Avoid accidental starting. The worker should not hold a finger on the switch button while carrying a plugged-in tool.
- Tools should be maintained with care. They should be kept sharp and clean for the best performance. Follow instructions in the user's manual for lubricating and changing accessories.
- Be sure to keep good footing and maintain good balance.
- The proper apparel should be worn. Loose clothing, ties, or jewelry can become caught in moving parts.
- All portable electric tools that are damaged shall be removed from use and tagged "Do Not Use."

Staff and subcontractors should follow all associated OSHA standards (29 CFR 1926), the most updated of which can be found at http://www.osha.gov. OSHA standards supersede any guidelines stated within this CHASP.

1.4.7 Slips, Trips, and Falls

Working in and around the site will pose slip, trip and fall hazards due to slippery surfaces. Excavation at the sites will cause uneven footing in the trenches and around the spoil piles. Employees will wear proper footwear (i.e. steel toe/shank boots) and will employ good work practice and housekeeping procedures to minimize the potential for slips, trips, and falls.

1.4.8 Manual Lifting

Manual lifting of objects and equipment may be required. Failure to follow proper lifting technique can result in back injuries and strains. Site workers should use power equipment to lift heavy loads whenever possible and should evaluate loads before trying to lift them (i.e., they should be able to easily tip the load and then return it to its original position). Carrying heavy loads with a buddy and proper lifting techniques include:

1) make sure footing is solid
2) make back straight with no curving or slouching
3) center body over feet
4) grasp the object firmly and as close to your body as possible
5) lift with legs
6) turn with your feet, don't twist

1.4.9 Projectile Objects, Debris and Overhead Dangers

Overhead dangers, including but not limited to falling debris and equipment, can occur while heavy machinery is in operation or work is taking place overhead. Staff will be instructed to maintain a minimum distance from large overhead operations. Staff must also maintain proper communication with heavy equipment operators and their handlers, especially if work necessitates their presence beyond the minimum safe distance. Additionally, employees should be cognizant of low-hanging overhead power lines, as these can snag on vehicles entering and exiting the site. Vehicles that are large enough to damage overhead power lines require spotters when entering and exiting the site. Proper PPE will be worn at all times during these types of activities including steel-toed or equivalent boots, safety vests and hard hats.

1.4.10 Heavy Equipment Operation

Heavy equipment may be present onsite. Staff should be cautious when working near or operating heavy equipment, and maintain a safe distance from the equipment. Personnel should maintain eye contact with the vehicle spotter or operator before traversing any paths that may cross that of the machinery. Safety vests are to be worn when working near operating heavy equipment.

1.4.11 Confined Spaces

If any work in confined spaces is required, it will be performed in accordance with 29 CFR 1910.146 (effective April 15, 1993), as applicable. Copies of the standards will be kept on file in the CM Contractor's main office, if work in confined spaces will be performed. Confined space work will not be performed without first notifying and receiving approval from the CM, if applicable.

1.4.12 Illumination

Illumination requirements identified by OSHA are directed to work efforts inside buildings and/or during non-daylight hours. OSHA illumination requirements will be followed when work is taking place inside the buildings. All exterior site activities at the site will occur during

daylight hours. However, if yard areas are used after dark they will be equipped with illumination that meets or exceeds requirements specified in 29 CFR 1926.56, Illumination.

1.4.13 Lockout/Tagout

Site personnel will assume that all electrical equipment at surface and overhead locations is energized, until the equipment has been designated as de-energized by a representative from the utility company. If the equipment cannot be de-energized, work will stop and the CM and appropriate contacts will be consulted. The CM will notify the client prior to working adjacent to this equipment, and will verify that the equipment is energized or de-energized in the vicinity of the work being conducted.

All power lines which have been indicated to be de-energized must be locked out, such that the lines cannot be energized when personnel are working near them. The lines shall not be unlocked and re-energized until the CM notifies the client that they have completed work in the area and that all personnel are clear of the area. Client representatives will thoroughly familiarize personnel with site-specific lockout/tagout procedures during the site orientation, if applicable.

If power lines cannot be de-energized, the CM will consult with utility safety personnel to determine the safe working distance from the energized line. Work tasks will only commence after determination that a safe working distance can be maintained and all personnel working in the area have been informed of the limitation.

1.4.14 Fall Hazards

Fall hazards exist onsite in several areas. Workers must follow all safeguards for fall protection as defined in OSHA 29 CFR 1926, Subpart M-Fall Protection. In general, workers should use the following guidelines:

- Use at least one of the following whenever employees are exposed to a fall of 6 feet or more above a lower level:
    - Guardrail Systems
    - Safety Net Systems
    - Personal Fall Arrest Systems
- Cover or guard floor holes as soon as they are created during new construction.
- For existing structures, survey the site before working and continually audit as work continues. Guard or cover any openings or holes immediately.
- Construct all floor hole covers so they will effectively support two times the weight of employees, equipment, and materials that may be imposed on the cover at any one time.

Floor hole covers are to be secured so they are not moved off of the hole and labeled so workers are aware what is under the cover.

- In general, it is better to use fall *prevention* systems, such as guardrails, than fall *protection* systems, such as safety nets or fall arrest devices, because they provide more positive safety means.
- Construct all scaffolds according to the manufacturer's instructions and 29 CFR 1926.451.
- Install guardrail systems along all open sides and ends of platforms.
- Use at least one of the following for scaffolds more than 10 feet above a lower level:

    - Guardrail Systems
    - Personal Fall Arrest Systems

- Provide safe access to scaffold platforms [*For additional information, see Scaffold Access*].
- Do not climb cross-bracing as a means of access.
- Guard all protruding ends of steel rebar with rebar caps or wooden troughs, *or*
- Bend rebar so exposed ends are no longer upright.
- When employees are working at any height above exposed rebar, fall protection/ prevention is the first line of defense against impalement.

1.4.15 Ladder Safety

Portable ladders must be safely positioned each time they are used. Staff and subcontractors should follow all associated OSHA standards (CFR 1926.1053), the most updated of which can be found at http://www.osha.gov. OSHA standards supersede any guidelines stated within this CHASP.

1.4.16 Scaffolding Safety

Scaffolding presents significant fall hazards and various types of scaffolds may be present onsite. Staff and subcontractors should follow all associated OSHA standards (CFR 1926 Subpart L - Scaffolds), the most updated of which can be found at http://www.osha.gov.

1.4.17 Welding

The intense light associated with welding operations can cause serious and sometimes permanent eye damage if operators do not wear proper eye protection. Additionally, sparks from the welding process present a risk to the employee conducting welding and nearby employees. Any flammable or combustible materials that may be exposed to sparks or other heat sources must be protected or relocated to prevent fire hazards. Fire extinguishers will be located in areas where welding or hot work will be taking place. Staff must wear helmets that comply with

ANSI Z49.1, with filter lenses that comply with ANSI Z87.1. Boots must comply with ASTM F2412 and ASTM F2413 for fire resistance. Welding operators must also wear flame-resistant welder's gloves.

Several chemicals may be used in the process of welding. Staff must be aware of the variety of chemicals used, and must possess appropriate welding training to perform welding activities. Additionally, compressed gas cylinders used in welding must be stored, placed and transported according to OSHA standards. Staff and subcontractors should follow all associated OSHA standards (CFR 1926), the most updated of which can be found at http://www.osha.gov.

1.4.18 Asbestos-Containing Material

Although the site does not contain asbestos-containing materials (ACM), workers should be aware of the risks associated with asbestos exposure. Chronic exposure to asbestos may cause asbestosis and mesothelioma. The primary route of exposure for asbestos is inhalation during the disturbance and/or removal of asbestos from pipe insulation and cement pipes.

Asbestos is strictly regulated under OSHA 29 CFR 1910.1001/1926.1101. Employees that may be potentially exposed to ACM must participate in a medical surveillance program, have specific training in the hazards and controls of exposure to asbestos and wear respirators with high efficiency particulate (HEPA) filters. All work must be conducted in demarcated regulated areas to minimize the amount of people within the exposure area. Employers must conduct air sampling and provide signs and labels regarding the presence of asbestos. Staff and subcontractors should follow all associated OSHA standards (CFR 1926), the most updated of which can be found at http://www.osha.gov.

The potential hazards for this project are listed in the following Activity Hazard Analysis and Site Hazards sections.

SITE HAZARDS	
Potential Hazard	**Control Measures**
Construction Safety	▪ Identify yourself and your work location to heavy equipment operators, so they may incorporate you into their operations. Coordinate hand signals with operators. ▪ Stay Alert! Pay attention to equipment backup alarms and swing radii. ▪ Wear a high visibility vest when working near equipment or motor vehicle traffic. ▪ Position yourself in a safe location when filling out logs and talking with the contractor. ▪ Notify the contractor immediately if any problems arise. ▪ Do not stand or sit under suspended loads or near any pressurized equipment lines. ▪ Do not use cellular telephones near operating equipment. ▪ Follow general traffic safety guidelines
Scaffolding Safety and Power Tools	▪ Follow OSHA Construction Safety Requirements 29 CFR 1926 Subpart L - Scaffolds. ▪ Do not use impact tools (i.e. chisels, hammers) with mushroomed heads. ▪ Do not use wooden-handled tools if the handle is damaged, splintered, loose or cracked. ▪ Inspect, maintain and replace tools as needed. ▪ Do not use wrenches if jaws are sprung. ▪ Tools should be directed away from aisles, other employees and trafficked areas. ▪ Wear appropriate PPE when using tools. ▪ Floors must be kept clean and as dry as possible to prevent slips, trips an falls around tools. ▪ Never carry a tool by the cord or hose. ▪ Never yank the cord or the hose to disconnect it from the receptacle. ▪ Keep cords and hoses away from heat, oil, and sharp edges. ▪ Disconnect tools when not in use, before servicing, and when changing accessories such as blades, bits and cutters. ▪ All observers should be kept at a safe distance away from the work area. ▪ Secure work with clamps or a vise, freeing both hands to operate the tool. ▪ Avoid accidental starting. The worker should not hold a finger on the switch button while carrying a plugged-in tool. ▪ Tools should be maintained with care. They should be kept sharp and clean for the best performance. Follow instructions in the user's manual for lubricating and changing accessories. ▪ Be sure to keep good footing and maintain good balance. ▪ The proper apparel should be worn. Loose clothing, ties, or jewelry can become caught in moving parts. ▪ All portable electric tools that are damaged shall be removed from use and tagged "Do Not Use." ▪ Keep all tools in good condition with regular maintenance. ▪ Use the right tool for the job. ▪ Examine each tool for damage before use. ▪ Operate according to the manufacturer's instructions. ▪ Provide and use the proper protective equipment.

Heavy Equipment Operation	▪ Maintain awareness of location of equipment. ▪ Subcontractor use of a spotter for equipment operation. ▪ Safety vest is to be worn around all operating equipment. ▪ Maintain eye contact with the operator. ▪ Stay out of the swing radii of the apparatus.
Slips, Trips, Falls	▪ Keep trafficked areas clear of debris and tools. Keep work areas and traffic areas dry.
Lock Out/Tag Out	▪ Maintain contact with utility to determine if energized lines or equipment has been de-energized ▪ Follow OSHA Lock Out/Tag Out requirements in 29 CFR 1910.147.
Welding	▪ Wear appropriate PPE (welding helmet, apron, fire-resistant gloves and boots, leggings) as needed. ▪ Follow OSHA Construction Safety Requirements 29 CFR 1926 Subpart J – Welding and Cutting.
Fire	▪ Keep fire extinguishers in working order by inspecting on a regular basis. ▪ Keep the appropriately rated and sized fire extinguishers on site as specified by 29 CFR 1926.150. ▪ Keep flammable materials away from ignition sources. ▪ Follow OSHA Construction Safety Requirements 29 CFR 1926 Subpart F – Fire Protection and Prevention and NPFA standards. ▪ Wear appropriate PPE when working around flammable materials.
Ladder Safety	▪ Follow safety guidelines for safe ladder use. ▪ Follow OSHA Construction Safety Requirements 29 CFR 1926.1053.
Fall Hazards	▪ Use appropriate fall protection at heights of 6 feet or greater. ▪ Avoid working in areas with a drop off of more than 2 feet. ▪ Erect appropriate barriers and guard rails. ▪ Wear appropriate fall protection PPE. ▪ Mark fall hazards so they are visible to employees. ▪ Follow OSHA Construction Safety Requirements 29 CFR 1926 Subpart M – Fall Protection.
Physical Injury	▪ Wear work boots in good condition with non-slip soles. ▪ Maintain good visibility of the work area. ▪ Avoid walking on uneven or debris ridden ground surfaces. ▪ Use proper lifting techniques. Ask fellow worker for help.
Noise	▪ Wear hearing protection when near loud noises. ▪ Wear hearing protection whenever you need to raise your voice above normal conversational speech due to a loud noise source; this much noise indicates the need for protection.
Vehicular Traffic	▪ Wear traffic safety vest at all times. ▪ Use cones, flags, barricades, and caution tape to define work area. ▪ Use a "spotter" to locate oncoming vehicles. ▪ Use vehicle to block work area. ▪ Engage police detail if needed.

Utilities	▪ Check that contactor has cleared underground utilities before any intrusive activities, and that contractor has coordinate with utility locating services, property owner(s) or utility companies. ▪ Utilities are to be considered live or active until documented otherwise. ▪ For overhead utilities within 50 feet, have contractor determine with the utility company the appropriate safe distance. Minimum distance for clearance is based on voltage of the line. ▪ An observer will be established when operating drilling rigs near overhead utilities.

ACTIVITY HAZARDS		
Activity	**Potential Hazards**	**Protective Equipment**
Entering Construction Site	Heavy equipment, dust, noise.	Hardhat, reflective safety vest, steel-toed, steel-shank boots, safety glasses, protective leather work gloves, and earplugs. Follow general traffic safety guidelines. Employ dust suppression controls (i.e. watering) to keep dust levels down to prevent inhalation of excavated materials.
General Construction (Foundation Work, Earthwork, Soil Vapor Barrier System Installation)	Heavy equipment, dust, noise. Contact with excavated soils.	Hardhat, reflective safety vest, steel-toed, steel-shank boots, safety glasses, protective leather work gloves, and earplugs. Follow general traffic safety guidelines. Employ dust suppression controls (i.e. watering) to keep dust levels down to prevent inhalation of excavated materials.
Personal Protective Equipment (PPE) is the *initial level of protection* based on the activity hazards and Site conditions which have been identified.		

1.5 Evaluation of Potential Chemical Hazards

The characteristics of compounds at the Site are discussed below for information purposes. Adherence to the safety and health guidelines in this CHASP should reduce the potential for exposure to the compounds discussed below. Table 1-1 presents chemical data regarding potential exposure and monitoring for the chemical types listed below.

1.5.1 Volatile Organic Compounds (VOCs)

No VOCs or PCBs were detected in any of the soil samples collected during the remedial investigation (RI). Numerous Semi Volatile Organic Compounds (SVOCs) were observed in low concentrations in the surficial (0-2') samples analyzed. None of the samples had results above the Unrestricted Use Soil Cleanup Objectives (SCOs). The shallow distribution of the detected SVOC compounds is typical of urban fill resulting from typical disposal of coal cinders

and ash used for home heating. No SVOC compounds were detected in the deeper samples collected.

Soil vapor samples collected during the RI showed very low concentrations of acetone, benzene, carbon disulfide, cyclohexane, hexane, toluene, and triclorofluoromethane. None of these compounds were observed in concentrations governed under the NYSDOH Soil Vapor Guidance.
VOCs detected in site groundwater included chloroform. One SVOC, Bis(2-ethylhexyl)phthalate was observed in GW-3 at 4 ppb. There is no established standard for this compound. No Pesticides or PCBs were detected in any of the groundwater samples.

VOCs may cause contact dermatitis. Direct contact can be irritating to the skin and produce itching, burning, swelling and redness. Direct contact or exposure to vapors may be irritating to the eyes. Conjunctivitis may result from prolonged exposure. High levels of exposure to SVOCs, though not anticipated during work activities conducted during this project, may increase the risk of cancer including lung, kidney and skin cancer. Poisoning may occur by ingestion of large doses, inhalation or skin absorption.

The major route of entry for the work activities to be conducted at this site is through direct contact. Exposure is most likely when handling soil samples. Inhalation may occur when the soil is disturbed causing respirable and nuisance dust particles to become airborne. Details for monitoring procedures can be found in Section 2.

1.5.2 Metals

Numerous naturally occurring metal elements were detected in the soil samples analyzed form the RI. All results were below the Unrestricted Use SCOs except for copper in boring B-3 at 0-2 ft. was detected at 140 ppm, above the Unrestricted Use SCO of 50 ppm, but below the Residential Use SCO of 270 ppm. Selenium was detected in boring B-6 at 4.0 ppm at 0-2ft. and 6.7 ppm at 12-14 ft. The Unrestricted Use SCO for selenium is 3.9 ppm and Residential Use SCO is 36 ppm.

Exposure to high concentrations of copper through inhalation can cause irritation of the eyes, nose, pharynx, nasal septum. Ingestion may cause a metallic taste. Skin irritation may result from direct contact with skin. Damage to the liver and kidneys may occur.

Exposure to high concentrations of selenium may cause eye, skin, nose and throat irritation, headache, chills, fever, bronchitis, a metallic taste in the mouth, garlic breath, gastrointestinal disturbance, dermatitis, and eye and skin burns.

The primary route of exposure is through inhalation of dust particles when soil is disturbed and becomes airborne.

1.5.3 Asbestos Containing Materials

As asbestos containing materials (ACM) have not been identified onsite, they are not currently monitored for at the site. However, in the course of earthwork, staff should be cognizant of potential ACM and report any suspected ACM to the CM Contractor and the CHSO, who will then determine the appropriate course of action.

1.5.4 Evaluation of Organic Vapor and Dust Exposure

During intrusive activities, the requirement for air monitoring reduces the risk of overexposure by indicating when action levels have been exceeded and when PPE must be upgraded or changed. Action levels for VOCs and dust, and the associated contingency plans for the work zone are discussed within Section 2. Air monitoring will be conducted during intrusive activities (such as drilling) and PID screening of well head spaces will be conducted during groundwater sampling activities.

Exposure to organic vapors and dusts shall be evaluated and/or controlled by:

- Monitoring air concentrations for organic vapors in the breathing zone with a photo-ionization detector (PID).
- Monitoring air concentrations for dust (used as a surrogate for heavy metals, PCBs, and pesticides) in the breathing zone with a dust meter.
- When possible, engineering control measures will be utilized to suppress the volatile organic vapors. Engineering methods can include utilizing a fan to promote air circulation, utilizing volatile suppressant foam, providing artificial ground cover or covering up the impacted material with a tarp to mitigate volatile odors. Dust can be controlled with the use of water spray to keep down visible dust levels.
- When volatile suppression or other engineering controls are not effective and organic vapor meters indicate concentrations above the action levels, then appropriate respiratory protection (i.e., air purifying respirator with organic vapor cartridge) will be employed.

Specific chemical hazards information from the Safety Data Sheet (SDS), formerly MSDS, and Occupational Health Guidelines are summarized in Table 1-1. SDSs for decontamination chemicals, calibration gases, sample preservation chemicals, or other chemicals that may be used onsite, are kept in a separate SDS binder onsite.

Site workers may also use compounds during the course of work. As such, workers should be aware of the potential hazards of these compounds. The CM CHSO must keep Safety Data Sheets (SDSs) for all compounds used on this project onsite in the project trailer or other appropriate area for review by site workers if requested. Adherence to the safety and health guidelines in this CHASP should reduce the potential for exposure to any compounds.

Table 1-1
Chemical Data

Compound	CAS #	American Conference of Industrial Hygienists (ACGIH) threshold limit value (TLV)	OSHA personal exposure limit (PEL)	Route of Exposure	Symptoms of Exposure	Target Organs	Physical Data
Chloroform	67-66-3	CA	C 50 ppm	Inhalation	Irritation of the eyes and skin, dizziness, mental dullness, nausea, confusion, headache, fatigue, enlarged liver.	Liver, heart, kidneys, eyes, skin, CNS	Colorless liquid with a pleasant odor FP: NA IP:11.42 eV LEL: NA UEL: NA VP: 160 mm
Bis (2-ethylhexyl) phthalate	117-81-7	CA	5 mg/m^3	Inhalation, ingestion, skin and/or eye contact	Irritation of the eyes and mucous membranes	Eyes, respiratory system, CNS, liver, reproductive system, gastrointestinal tract	Colorless oily liquid with a slight odor FP: 420°F IP: ? LEL: 0.3% UEL: ? VP: <0.01 mm
Copper	7440-50-8	1.0 mg/m^3	1.0 mg/m^3	Inhalation Ingestion Skin Contact	Irritation of eyes, nose, pharynx; nasal septum perf; metallic taste, skin irritation	Respiratory system, eyes, skin, liver, kidneys (increase risk with Wilson's disease)	Reddish, lustrous, malleable, odorless solid FP: NA IP: NA LEL: NA UEL NA VP: 0 mm
Selenium	7782-49-2	NA	OSHA/ NIOSH Exposure Limit: 0.2 mg/m^3	Inhalation, ingestion, skin or eye contact	Irrotation to eyes , skin , throat and nose, headache, chills, fever, bronchitis, metallic taste in mouth, garlic breath, GI disturbance, dermatitis, eye and skin burns.	Eyes, skin, respiratory system, liver kidneys, blood, spleen	Amorphous or crystalline, red to gray solid. FP: NA LEL:N/A UEL: N/A VP: 0 mm

1.6 Biological Hazards

During the course of the project, there is a potential for workers to come into contact with biological hazards such as animals, insects and plants. Workers will be instructed in hazard recognition, health hazards, and control measures during site-specific training.

1.6.1 Animals

During the conduct of site operations, wild animals such as stray dogs or cats, raccoons, and mice may be encountered. Workers shall use discretion and avoid all contact with wild animals. If these animals present a problem, efforts will be made to remove these animals from the site by contacting a licensed animal control technician.

1.6.2 Insects

Insects, including bees, wasps, hornets, and spiders, may be present at the Site making the chance of a bite possible. Some individuals may have a severe allergic reaction to an insect bite or sting that can result in a life threatening condition. Any individuals who have been bitten or stung by an insect should notify the Site Safety Officer (SSO). The following is a list of preventive measures:

- Apply insect repellent prior to performing any field work and as often as needed throughout the work shift.
- Wear proper protective clothing (work boots, socks and light colored pants).
- When walking in wooded areas, avoid contact with bushes, tall grass, or brush as much as possible.
- Field personnel who may have insect allergies should have bee sting allergy medication onsite and should provide this information to the SSO prior to commencing work.

1.6.2.1 Tick Borne Illnesses

Lyme disease is caused by infection from a deer tick that carries a spirochete. During the painless tick bite, the spirochete may be transmitted into the bloodstream that could lead to the worker contracting Lyme disease.

Lyme disease may cause a variety of medical conditions including arthritis, which can be treated successfully if the symptoms are recognized early and medical attention is received. Treatment with antibiotics has been successful in preventing more serious symptoms from developing. Early signs may include a flu-like illness, an expanding skin rash, and joint pain. If left untreated, Lyme disease can cause serious nerve or heart problems, as well as a disabling type of arthritis.

Symptoms can include a stiff neck, chills, fever, sore throat, headache, fatigue and joint pain. This flu-like illness is out of season, commonly happening between May and October when ticks are most active. A large expanding skin rash may develop around the area of the bite. More than one rash may occur. The rash may feel hot to the touch and may be painful. Rashes vary in size, shape, and color, but often look like a red ring with a clear center. The outer edges expand in size. It's easy to miss the rash and the connection between the rash and a tick bite. The rash develops from three days to as long as a month after the tick bite. Almost one third of those with Lyme disease never get the rash.

Joint or muscle pain may be an early sign of Lyme disease. These aches and pains may be easy to confuse with the pain that comes with other types of arthritis. However, unlike many other types of arthritis, this pain seems to move or travel from joint to joint.

Lyme disease can affect the nervous system. Symptoms include stiff neck, severe headache, and fatigue usually linked to meningitis. Symptoms may also include pain and drooping of the muscles on the face, called Bell's Palsy. Lyme disease may also mimic symptoms of multiple sclerosis or other types of paralysis.

The disease can also cause serious but reversible heart problems, such as irregular heartbeat. Finally, Lyme disease can result in a disabling, chronic type of arthritis that most often affects the knees. Treatment is more difficult and less successful in later stages. Often, the effects of Lyme disease may be confused with other medical problems.

It is recommended that personnel check themselves when in areas that could harbor deer ticks, wear light color clothing and visually check themselves and their buddy when coming from wooded or vegetated areas. If a tick is found biting an individual, the Construction Manager (CM) should be contacted immediately. The tick can be removed by pulling gently at the head with tweezers. The affected area should then be disinfected with an antiseptic wipe. The employee will be offered the option for medical treatment by a physician, which typically involves prophylactic antibiotics. If personnel feel sick or have signs similar to those above, they should notify the CM immediately.

The deer tick can also cause **Babesiosis**, an infection of the parasite Babesia Microti. Symptoms of Baesiosis may not be evident, but may also include fever, fatigue and hemolytic anemia lasting from several days to several months. Babesiosis is most commonly diagnosed in the elderly or in individuals whose immune systems are compromised.

Ehrlichiosis is a tick-borne disease which can be caused by either of two different organisms. Human monocytic ehrlichiosis (HME) is caused by *Ehrlichia chaffeensis*, which is transmitted by the lone star tick (*Amblyomma americanum*). Human granulocytic anaplasmosis (HGA), previously known as human granulocytic ehrlichiosis (HGE), is caused by *Anaplasma phagocytophilia*, which is transmitted by the deer tick (*Ixodes scapularis*).

In New York State, most cases of ehrlichiosis have been reported on Long Island and in the Hudson Valley. Ehrlichiosis is transmitted by the bite of infected ticks, including the deer tick and the lone star tick. The symptoms of HME and HGE are the same and usually include fever, muscle aches, weakness and headache. Patients may also experience confusion, nausea, vomiting and joint pain. Unlike Lyme disease or Rocky Mountain spotted fever, a rash is not common. Infection usually produces mild to moderately severe illness, with high fever and headache, but may occasionally be life-threatening or even fatal. Symptoms appear one to three weeks after the bite of an infected tick. However, not every exposure results in infection.

Rocky Mountain spotted fever (RMSF) is a tick-borne disease caused by a rickettsia (a microbe that differs somewhat from bacteria and virus). Fewer than 50 cases are reported annually in New York State. In the eastern United States, children are infected most frequently, while in the western United States, disease incidence is highest among adult males. Disease incidence is directly related to exposure to tick-infested habitats or to infested pets. Most of the cases in New York State have occurred on Long Island. RMSF is characterized by a sudden onset of moderate to high fever (which can last for two or three weeks), severe headache, fatigue, deep muscle pain, chills and rash. The rash begins on the legs or arms, may include the soles of the feet or palms of the hands and may spread rapidly to the trunk or rest of the body. Symptoms usually appear within two weeks of the bite of an infected tick.

*(Information on Ehrlichiosis, Babesiosis, and Rocky Mountain Spotted Fever was derived from the New York State Department of Health).

1.6.2.2 Wasps and Bees

Wasps (hornets and yellow-jackets) and bees (honeybees and bumblebees) are common insects that may pose a potential hazard to the field team if work is performed during spring, summer or fall. Bees normally build their nests in the soil. However, they use other natural holes such as abandoned rodent nests or tree hollows. Wasps make a football-shaped, paper-like nest either below or above the ground. Yellow-jackets tend to build their nests in the ground but hornets tend to build their nests in trees and shrubbery. Bees are generally more mild-mannered than wasps and are less likely to sting. Bees can only sting once while wasps are capable of stinging multiple times because of a barbless stinger. Wasps sting when they feel threatened. By remaining calm and not annoying wasps by swatting, you lessen the chance of being stung.

Wasps and bees inject a venomous fluid under the skin when they sting. The venom causes a painful swelling that may last for several days. If the stinger is still present, carefully remove it with tweezers. Some people may develop an allergic reaction (i.e. anaphylactic shock) to a wasp or bee sting. If such a reaction develops, seek medical attention at once. Employees should inform the CHSO if they are allergic to bees or wasps, and inform the CHSO if an epi-pen is required treatment and the location of the pen.

1.6.3 Plants

The potential for contact with poisonous plants exists when performing field work in undeveloped and wooded areas. Poison ivy, sumac, and oak may be present onsite. Poison ivy can be found as vines on tree trunks or as upright bushes. Poison ivy consists of three leaflets with notched edges. Two leaflets form a pair on opposite sides of the stalk, and the third leaflet stands by itself at the tip. Poison ivy is red in the early spring and turns shiny green later in the spring. Poison sumac can be present in the form of a flat-topped shrub or tree. It has fern-like leaves, which are velvety dark green on top and pale underneath. The branches of immature trees have a velvety "down." Poison sumac has white, "hairy" berry clusters. Poison oak can be present as a sparingly branched shrub. Poison oak is similar to poison ivy in that it has the same leaflet configuration; however, the leaves have slightly deeper notches. Prophylactic application of Tecnu may prevent the occurrence of exposure symptoms. Post exposure over the counter products are available and should be identified at the local pharmacist. Susceptible individuals should be identified to the CHSO.

Contact with poison ivy, sumac, or oak may lead to a skin rash, characterized by reddened, itchy, blistering skin which needs first aid treatment. If a field worker believes they have contacted one of these plants, immediately wash skin thoroughly with soap and water, taking care not to touch your face or other body parts.

1.7 Sun Exposure

Employees are encouraged to liberally apply sunscreen, with a minimum sun protection factor (SPF) of 15, when working outdoors to avoid sunburn and potential skin cancer, which is associated with excessive sun exposure to unprotected skin. Additionally, employees should wear safety glasses that offer protection from UVA/UVB rays.

1.8 Personal Safety

Field activities have the potential to take site workers into areas which may pose a risk to personal safety. The following website (source) has been researched to identify potential crime activity in the area of the project:

http://www.nyc.gov/html/nypd/html/crime_prevention/crime_statistics.shtml

2012 crime statistics from this website report that the 123rd Precinct, which is closest to the Site, recorded all crimes below the New York City total (see below).

Type of Crime	Subject Property and Vicinity	New York City Total*
Murder	1	419
Rape	5	1,450
Robbery	28	20,165
Felony Assault	59	19,416
Burglary	87	19,176
Grand Larceny	183	42,551

*New York City Total includes values from the 123rd Precinct

To protect yourself, take the following precautions:

- **Use the buddy system (teams of a minimum of two persons present);**
- **Let the SSO know when you begin work in these areas and when you leave;**
- **Call in regularly;**
- **Pay attention to what is going on around you; and**
- **If you arrive in an area and it does not look safe to get out of your vehicle, lock the doors and drive off quickly, but safely.**

Site workers must not knowingly enter into a situation where there is the potential for physical and violent behaviors to occur. If site workers encounter hostile individuals or a confrontation develops in the work area, suspend work activities, immediately leave the area of concern, and contact local 911 for assistance. Notify the SSO and CHSO of any incidents once you are out of potential danger.

In the event of an emergency, prompt communications with local emergency responders is essential. At least one charged and otherwise functioning cell phone to facilitate emergency communications will be on site. Confirmation of cellular phone operation and site worker safety will be confirmed at the start of each working day.

2. Air Monitoring

Air monitoring identifies and quantifies airborne levels of hazardous substances and safety and health hazards in order to determine the appropriate level of worker protection needed on site. This monitoring will provide worker safety against exposure to combustible gases, oxygen deficient atmospheres and potential chemical exposures. This monitoring will also help the CHSO to identify the type and level of Personal Protective Equipment required to carry out the task.

The CM Contractor will provide the following equipment for health and safety monitoring of onsite personnel, if deemed necessary:

- Photoionization Meter (PID)
- Dust Meter
- Sound Level Meter by the CHSO, type to be appropriate to the activities performed

All monitoring equipment will be calibrated and maintained in accordance with manufacturer's requirements. All calibrations will be recorded in the project notes daily or on a daily calibration form.

Heat/cold exposure evaluation is required to determine worker acclimatization and to determine work/rest regimes for heat stress.

Exposure to high levels of noise during drilling, and operation of mechanical equipment needs to be evaluated. Personnel need to be advised on the use of ear muffs and may have to be evaluated with audiometry testing depending on the nature and severity of the noise levels.

The CHSO or appropriate staff member will interpret monitoring results using professional judgment and according to the alert and action limits set forth in the table below.

A dust meter will be used to measure airborne particulate matter in the work zone during site activities.

Table 2-1 provides a summary of real time air monitoring action levels for work zone activities. The below action levels are determined by halving the permissible exposure limits (PELs) or Threshold Limit Values (TLVs) as set forth by the Occupational Safety and Health Administration (OSHA) and the American Conference of Government Industrial Hygienists (ACGIH).

TABLE 2-1
REAL TIME WORK ZONE AIR MONITORING ACTION LEVELS

Air Monitoring Instrument	Action Level (above background)
PID	1 ppm
Particulate Meter	150µg/m^3

3. Project Personnel/Responsibilities and Lines of Authority

Lines of Authority will be as follows:

Onsite – The CM Contractor will have responsibility for safety of its employees during the work performed at the site. The Field Representative (FR) will have a cell phone available to contact the appropriate local authorities, in the event of an emergency. The FR will be available for communication with the SSO and CM and with the client representative. The FR and/or SSO may change due to the nature of work being conducted onsite.

3.1 Construction Manager (CM)

Responsibilities of the CM include the following:

- Verifies implementation of the CHASP
- Conducts periodic inspections and documents these in the field book
- Participates in incident investigations
- Verifies the HASP has all of the required approvals before any site work is conducted
- Verifies that the client and/or CM site manager is informed of project changes, which require modifications of the CHASP
- Has overall responsibility for project health and safety
- Acts as the primary point of contact with the client for site related activities and coordination with non-project related site operations
- Overseeing of performance of project tasks as outlined in the scope of work
- Plans field work using appropriate safe procedures and equipment
- Verifies and documents current OSHA Construction training compliance for all construction trades
- Verifies that subcontractors acknowledge and sign the projects CHASP

3.2 Construction Health and Safety Officer (CHSO)

The CHSO is a qualified health and safety professional with experience in construction activities. Responsibilities of the CHSO include the following:

- Serves as the primary contact to review health and safety matters that may arise
- Approves revised or new safety protocols for field operations
- Coordinates revisions of this CHASP with field personnel
- Coordinates upgrading or downgrading of PPE with the site manager
- Leads the investigation of all accidents/incidents

- Provide the necessary training of subcontractor trade field crews in accordance with OSHA regulations and provides proof of training to the SSO prior to subcontractor trade personnel entering the site

3.3 Site Safety Officer (SSO)

Responsibilities of the SSO include the following:

- Verifies that the CHASP is implemented and that all health and safety activities identified in the HASP are conducted and/or implemented
- Verifies that field work is scheduled with adequate personnel and equipment resources to complete the job safely and enforces site health and safety rules
- Verifies that adequate communications between trade crews and emergency response personnel is maintained during emergency situations
- Verifies that field site personnel are adequately trained and qualified to work at the site and that proper PPE is utilized
- Report all accidents/incidents to the CHSO and CM
- Stop work if necessary
- Identifies operational changes which require modifications to the CHASP and ensures that the procedure modifications are implemented and documented through changes to the CHASP, with CHSO approval
- Determines upgrades or downgrades of PPE based on site conditions and/or real-time monitoring results with CHSO approval
- Reports to the CHSO and provides summaries of field operations and progress

3.4 Field Representative (FR)

The FR is responsible for carrying out field work on a monthly, quarterly, or as-needed basis. Responsibilities of the FR include:

- Conducts routine safety inspection of the work area
- Documenting occurrences of unsafe activity and what actions were taken to rectify the situation
- Reports any unsafe or potentially hazardous conditions to the SSO and CM
- Maintains familiarity of the information, instructions, and emergency response actions contained in the CHASP
- Complies with rules, regulations and procedures set forth in the CHASP
- Prevents admittance to work site by unauthorized personnel
- Inspects all tools and equipment, including PPE, prior to use and documents inspection on the daily safety meeting form or in the appropriate field book
- Verifies that monitoring instruments are calibrated
- Stops work if necessary

4. Subcontractors

The CM Contractor may subcontract with various companies to conduct various work onsite on an as-needed basis. Contact information for these subcontractors will be available when such work is being conducted.

The CM Contractor requires its subcontractors to work in a responsible and safe manner. Subcontractors for this project may be required to develop their own CHASP for protection of their employees and must adhere to applicable requirements set forth in this CHASP.

5. Emergency Contact List

<table>
<tr><th colspan="4">EMERGENCY INFORMATION</th></tr>
<tr><td colspan="2">Important Phone Numbers</td><td colspan="2">Directions to:
Staten Island University Hosiptal
375 Seguine Avenue
Staten Island, New York 10309</td></tr>
<tr><td>Police</td><td>911</td><td colspan="2" rowspan="5">▪ Head west on Woodrow Rd toward Rossville Ave (0.1 mi)
▪ Make a U-turn at Latham Pl (0.1 mi)
▪ Take the 1st right onto Foster Rd (1.1 mi)
▪ Turin right onto Amboy Rd (210 ft)
▪ Take the 1st left onto Seguine Ave (0.7 mi)
▪ Destination will be on the left

Refer to Hospital Route Map in Appendix A.</td></tr>
<tr><td>Fire Department</td><td>911</td></tr>
<tr><td>Ambulance</td><td>911</td></tr>
<tr><td>Local Hospital
Staten Island University Hospital</td><td>(718) 226-2000</td></tr>
<tr><td>NYSDEC Spill Hotline</td><td>(518) 457-7362</td></tr>
<tr><td>Chemtrec</td><td>1-800-424-9300</td><td colspan="2">Poison Control Center 1-800-222-1222</td></tr>
<tr><th colspan="4">Site Contacts</th></tr>
<tr><td colspan="2">Margaret Comoletti-Dora Homes Inc.</td><td colspan="2">718-356-6444</td></tr>
<tr><td colspan="2">Site Health and Safety Officer</td><td>TBD</td><td>TBD</td></tr>
<tr><td colspan="2">Site Supervisor</td><td>Otto Savo-Woodrow Plaza Inc.</td><td>347-242-6127</td></tr>
<tr><td colspan="2">Construction Contractor</td><td>TBD</td><td>TBD</td></tr>
</table>

6. Training Program

6.1 Hazard Communication

In accordance with 29 CFR 1926, site workers shall, at the time of job assignment, have received hazard communication training. All hazardous materials used on the site will be properly labeled, stored, and handled. SDSs will be available to onsite staff.

6.2 Onsite Safety Briefings

Other onsite personnel will be given health and safety briefings by a FR to assist personnel in safely conducting work activities. The briefings will include information on new operations to be conducted, changes in work practices or changes in the site's conditions, as well as periodic reinforcement of previously discussed topics. The briefings will also provide a forum to facilitate conformance with safety requirements and to identify performance deficiencies related to safety during daily activities or as a result of safety inspections. These safety briefing will be documented on a daily safety briefing form or other appropriate media.

7. Medical Support

In case of minor injuries, onsite care shall be administered with the Site first aid kit. For serious injuries, call 911 and request emergency medical assistance. Seriously injured persons should not be moved, unless they are in immediate danger.

Section 5 and **Appendix A** contain detailed emergency information, including directions to the nearest hospital, and a list of emergency services and their telephone numbers. Field personnel will carry a cellular telephone.

8. Personal Protective Equipment

PPE required for each level of protection is as follows.

Safety Equipment	Level A	Level B	Level C	Level D
Hard hats with splash shields or safety glasses			•	•
Steel-toe boots with overboots as appropriate for work being performed and materials handled			•	•
Protective Leather Work Gloves or Chemical-resistant gloves as needed			•	•
Reflective Vest			•	•
Half- or full-face respirators with HEPA cartridges as approved by the CHSO as needed			•	
Long Pants	•	•	•	•
Welding Helmet				•
Welding Gloves, apron, leggings (as needed)				•
Flame-resistant boots for welding				•

PPE can include hardhats, safety glasses or face shields, steel toe/steel shank boots, hearing protection, nitrile gloves, and leather gloves as necessary.

OSHA Requirements for PPE

All PPE used during the course of this field investigation must meet the following OSHA standards:

Type of Protection	Regulation	Source
Eye and Face	29 CFR 1910.133	ANSI Z87.1 1968
Respiratory	29 CFR 1910.134	ANSI Z88.1 1980
Head	29 CFR 1910.135	ANSI Z89.1 1969
Foot	29 CFR 1910.136	ANSI Z41.1 1999 or ASTM F-2412-2005, and ASTM F-2413-2005

CFR = Code of Federal Regulations
ANSI = American National Standards Institute
ASTM = American Society For Testing and Materials

Any onsite personnel who have the potential to don a respirator must have a valid fit test certification and documentation of medical clearance. The CHSO will maintain such information on file for onsite personnel. The CM will obtain such information from the subcontractor's site supervisor prior to the initiation of any such work. Both the respirator and cartridges specified for use in Level C protection must be fit-tested prior to use in accordance with OSHA regulations (29 CFR 1910.134). Air purifying respirators cannot be worn under the following conditions:

- Oxygen deficiency;
- IDLH concentrations; and
- If contaminant levels exceed designated use concentrations.

For most work conducted at the site, Level D PPE will include long pants, hard hats, safety glasses with side shields, and steel toe safety boots with steel shanks. The CHSO will determine if site works deems an upgrade in PPE. The use of respirators is not anticipated.

Use of Level A or Level B PPE is not anticipated. If conditions indicating the need for Level A or Level B PPE are encountered, personnel will leave the work zone and this CHASP will be revised with oversight of the CHSO, personnel will not re-enter the work zone until conditions allow.

9. Supplemental Contingency Plan Procedures

9.1 Fire

In the event of a fire, all personnel will evacuate the area. The FR will contact the local fire department and report the fire. Notification of evacuation will be made to the client, the CM and the CHSO. The FR or appropriate staff member will account for subcontractor personnel and report their status to the CM.

9.2 Severe Weather

The contingency plan for severe weather includes reviewing the expected weather to determine if severe weather is in the forecast. Severe weather includes high winds over 30 mph, heavy rains or snow squalls, thunderstorms, hurricanes, and lightning storms. If severe weather is approaching, the decision to evacuate staff and subcontractor personnel from the site is the responsibility of the FR. Notification of evacuation will be made to the Project Manager, the Construction Project Manager and the CHSO. The FR will account for onsite staff and report their status to the CM. If safe, work can resume 30 minutes after the last flash of lightening or clash of thunder.

9.3 Spills or Material Release

If a hazardous waste spill or material release, the SSO or their representative will immediately assess the magnitude and potential seriousness of the spill or release based on the following:

- SDS, if applicable, for the material spilled or released
- Source of the release or spillage of hazardous material
- An estimate of the quantity released and the rate at which it is being released
- The direction in which the spill or air release is moving
- Personnel who may be or may have been in contact with the material, or air release, and possible injury or sickness as a result
- Potential for fire and/or explosion resulting from the situation
- Estimates of area under influence of release

If the spill or release is determined to be within the onsite emergency response capabilities, the SSO will ensure implementation of the necessary remedial action. If the release is beyond the capabilities of the site personnel, all personnel will be evacuated from the immediate area and the local fire department will be contacted. The SSO will notify the CM and the CHSO.

9.4 Alcohol and Drug Abuse Prevention

Alcohol and drugs will not be allowed on the work site. Project personnel under the influence of alcohol or drugs will not be allowed to enter the site.

10. Decontamination Procedures

10.1 Personnel Decontamination Station

As needed, a personnel decontamination station where workers can drop equipment and remove PPE will be set up as needed by the Contractor. The PPE area will be equipped with basins for water and detergent, and trash bag(s) or cans for containing disposable PPE and discarded materials. Once personnel have decontaminated at this station and taken off their PPE, they will proceed to a portable sink where they will wash themselves wherever they have potentially been exposed to any contaminants (e.g., hands, face, etc.).

Contaminated PPE (gloves, suits, etc.) will be decontaminated and stored for reuse or placed in plastic bags (or other appropriate container) and disposed of in an approved facility. Decontamination wastewater and used cleaning fluids will be collected and disposed of in accordance with all applicable state and federal regulations.

10.2 Decontamination Equipment Requirements

If heavily contaminated soils are encountered during intrusive work, the following equipment, as needed, will be in sufficient supply to implement decontamination procedures for equipment.

- Buckets
- Alconox™ detergent concentrate
- Hand pump sprayers
- Long handle soft bristle brushes
- Large sponges
- Cleaning wipes for respirators
- Bench or stool(s)
- Methanol
- Liquid detergent and paper towels
- Plastic trash bags

Construction Health and Safety Plan Sign-Off

All personnel conducting site activities must read this Construction Health and Safety Plan, be familiar with its requirements, and agree to its implementation.

All other personnel onsite for regulatory, observational and other activities not directly associated with site activities must read this Health and Safety Plan for hazard communication purposes.

Once the Construction Health and Safety Plan has been read, complete this sign-off sheet, and return it to the Project Manager**.**

Site Name:
Woodrow Plaza

Activity:

- Foundation excavation, loading and removal of site soils
- Site grading
- Building construction

I have received and read the Health and Safety Plan, been briefed on it, and agree to its implementation.

Name	Signature	Date	Company

APPENDIX A

SITE-SPECIFIC INFORMATION

Directions to Staten Island University Hospital - South Campus
375 Seguine Ave, Staten Island, NY 10309
2.0 mi – about **7 mins**

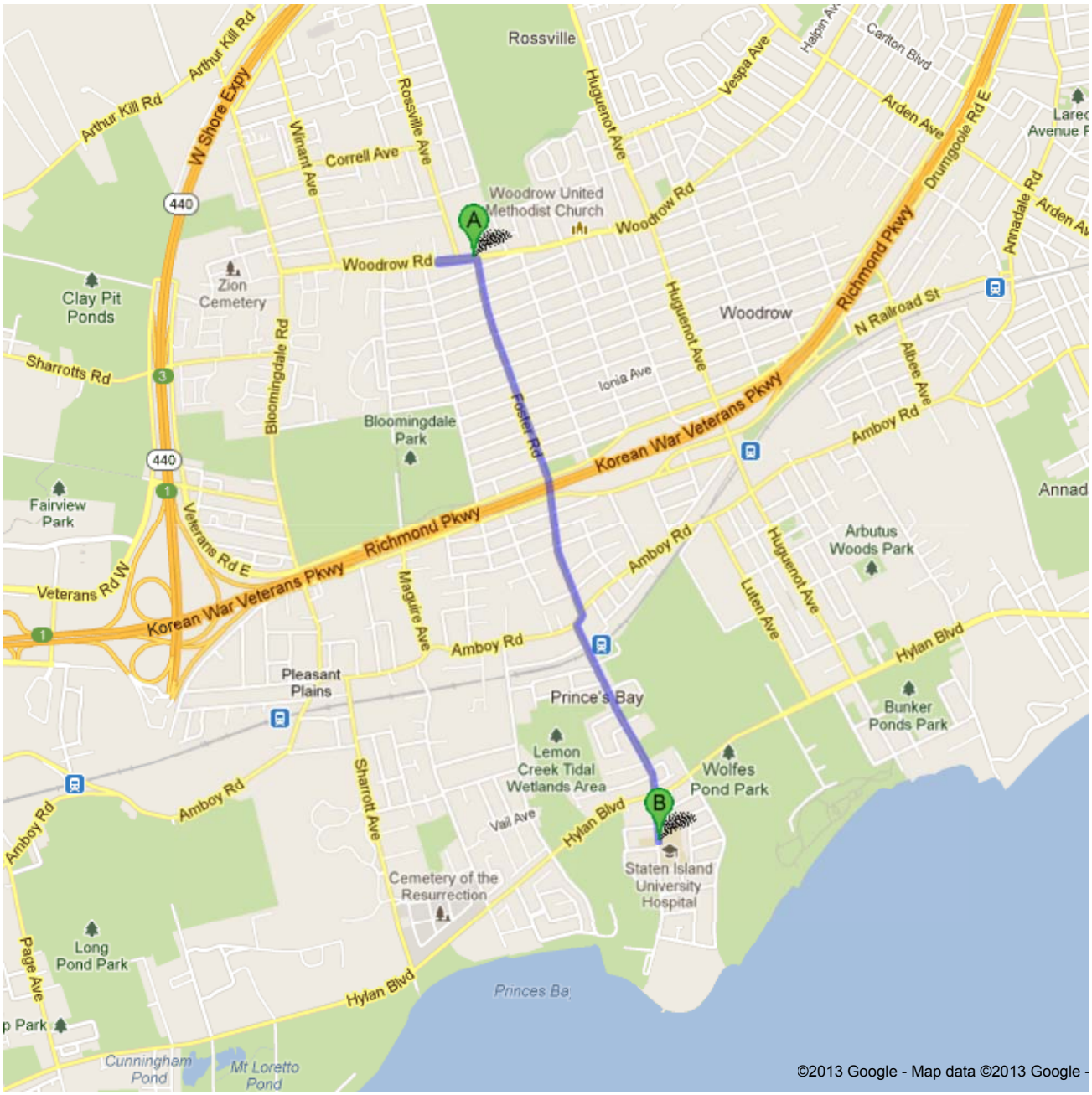

1275 Woodrow Rd, Staten Island, NY 10309

	1. Head **west** on **Woodrow Rd** toward **Rossville Ave**	go 0.1 mi total 0.1 mi
	2. Make a U-turn at **Latham Pl** About 1 min	go 0.1 mi total 0.2 mi
	3. Take the 1st right onto **Foster Rd** About 3 mins	go 1.1 mi total 1.3 mi
	4. Turn right onto **Amboy Rd**	go 210 ft total 1.3 mi
	5. Take the 1st left onto **Seguine Ave** Destination will be on the left About 2 mins	go 0.7 mi total 2.0 mi

Staten Island University Hospital - South Campus
375 Seguine Ave, Staten Island, NY 10309

These directions are for planning purposes only. You may find that construction projects, traffic, weather, or other events may cause conditions to differ from the map results, and you should plan your route accordingly. You must obey all signs or notices regarding your route.

Map data ©2013 Google

Directions weren't right? Please find your route on maps.google.com and click "Report a problem" at the bottom left.

APPENDIX B

COLD STRESS GUIDELINES

Cold Stress Guidelines

	Symptoms	What to do
▪ **Mild Hypothermia**	▪ Body Temp 98-90°F ▪ Shivering ▪ Lack of coordination, stumbling, fumbling hands ▪ Slurred speech ▪ Memory loss ▪ Pale, cold skin	▪ Move to warm area ▪ Stay active ▪ Remove wet clothes and replace with dry clothes of blankets ▪ Cover the head ▪ Drink warm (not hot) sugary drink
▪ **Moderate Hypothermia**	▪ Body temp 90-86°F ▪ Shivering stops ▪ Unable to walk or stand ▪ Confused irrational	▪ All of the above, plus: ▪ Call 911 ▪ Cover all extremities completely ▪ Place very warm objects, such as hot packs on the victim's head, neck, chest and groin
▪ **Severe Hypothermia**	▪ Body temp 86-78°F ▪ Severe muscle stiffness ▪ Very sleepy or unconscious ▪ Ice cold skin ▪ Death	▪ Call 911 ▪ Treat victim very gently ▪ Do not attempt to re-warm
▪ **Frostbite**	▪ Cold, tingling, stinging or aching feeling in the frostbitten area, followed by numbness ▪ Skin color turns red, then purple, then white or very pale skin ▪ Cold to the touch ▪ Blisters in severe cases	▪ Call 911 ▪ Do not rub the area ▪ Wrap in soft cloth ▪ If help is delayed, immerse in warm, not hot, water
▪ **Trench Foot**	▪ Tingling, itching or burning sensation ▪ Blisters	▪ Soak feet in warm water, then wrap with dry cloth bandages ▪ Drink a warm sugary drink

APPENDIX C

HEAT STRESS GUIDELINES

HEAT STRESS GUIDELINES

Form	Signs & Symptoms	Care	Prevention[3]
Heat Rash	Tiny red vesicles in affected skin area. If the area is extensive, sweating can be impaired.	Apply mild lotions and cleanse the affected area.	Cool resting and sleeping areas to permit skin to dry between heat exposures
Heat Cramps	Spasm, muscular pain (cramps) in stomach area and extremities (arms and legs).	Provide replacement fluids with minerals (salt) such as Gatorade.	Adequate salt intake with meals[1] ACCLIMATIZATION[2]
Heat Exhaustion	Profuse sweating, cool (clammy) moist skin, dizziness, confusion, pale skin color, faint, rapid shallow breathing, headache, weakness, muscle cramps.	Remove from heat, sit or lie down, rest, replace lost water with electrolyte replacement fluids (water, Gatorade) take frequent sips of liquids in amounts greater than required to satisfy thirst.	ACCLIMATIZATION[2] Adequate salt intake with meals 1 only during early part of heat season. Ample water intake, frequently during the day
Heat Stroke	HOT Dry Skin. Sweating has stopped. Mental confusion, dizziness, nausea, severe headache, collapse, delirium, coma.	HEAT STROKE IS A MEDICAL EMERGENCY - Remove from heat. - COOL THE BODY AS RAPIDLY AS POSSIBLE by immersing in cold (or cool) water, or splash with water and fan. Call for Emergency Assistance. Observe for signs of shock.	ACCLIMATIZATION[2] Initially moderate workload in heat (8 to 14 days). Monitor worker's activities.

Footnotes:

1) American diets are normally high in salt, sufficient to aid acclimatization. However, during the early part of the heat season, (May, June), one extra shake of salt during one to two meals per day may help, so long as this is permitted by your physician. Check with your personal physician.

2) ACCLIMATIZATION - The process of adapting to heat is indicated by worker's ability to perform hot jobs less fluid loss, lower concentrations of salt loss in sweat, and a reduced core (body) temperature and heart rate.

3) Method to Achieve Acclimatization - Moderate work or exercise in hot temperatures during early part of heat season. Adequate salt (mineral) and water intake. Gradually increasing work time in hot temperatures. Avoid alcohol. Normally takes 8 to 14 days to achieve acclimatization. Lost rapidly, if removed from strenuous work (or exercise) in hot temperature for more than approximately five days.

APPENDIX D

SAFETY DATA SHEETS (SDSs)

Appendix

Material Data Sheets

VOLATILE ORGANIC COMPOUNDS (VOCs)

Minnesota Department of Health Fact Sheet

September 2005

Volatile Organic Compounds - VOCs

What are VOCs?

Volatile Organic Compounds (VOCs) are chemicals that evaporate easily at room temperature. The term "organic" indicates that the compounds contain carbon. VOC exposures are often associated with an odor while other times there is no odor. Both can be harmful. There are thousands of different VOCs produced and used in our daily lives. Some examples are:

- Benzene
- Toluene
- Methylene
- Chloride
- Formaldehyde
- Xylene
- Ethylene glycol
- Texanol
- 1,3-butadiene

Where do VOCs come from?

Many products emit or "off-gas" VOCs. Some examples of VOC emission sources are:

- Paints
- Varnishes
- Moth balls
- Solvents
- Gasoline
- Newspaper
- Cooking
- Cleaning Chemicals
- Vinyl floors
- Carpets
- Photocopying
- Upholstery Fabrics
- Adhesives
- Sealing Caulks
- Cosmetics
- Air Fresheners
- Fuel Oil
- Vehicle Exhaust
- Pressed wood furniture
- Environmental Tobacco Smoke (Secondhand smoke)

What levels of VOC are typical in the home?

As of July, 2003 neither Minnesota nor the federal government have set standards for VOC levels in non-occupational settings. However, some guidelines are available. MDH has established Health Risk Values (HRVs) for some contaminants in air for several different exposure situations. For more information on these HRVs go to MDH Health Risk Values Website.

Many studies have shown VOC levels are higher in indoor air than outdoor air. The U.S. Environmental Protection Agency (EPA) Total Exposure Assessment Methodology (TEAM) studies have found indoor VOC levels that were 2 to 5 times higher than outdoors.

Levels of VOC exposure in indoor air vary widely depending on:

- the volume of air in the room/building
- the rate at which the VOC is off-gassed
- the building ventilation rate
- outdoor concentrations

Along with the concentration of VOCs in a given environment, the time an individual spends in that environment is important in determining exposure.

What are the health effects of VOC exposure?

Acute

- Eye irritation / watering
- Nose irritation
- Throat irritation
- Headaches
- Nausea / Vomitting
- Dizziness
- Asthma exacerbation

Chronic

- Cancer
- Liver damage
- Kidney damage
- Central Nervous System damage.

MINNESOTA MDH DEPARTMENT of HEALTH

Indoor Air Unit
P.O. Box 64975
St, Paul, MN, 55164-0975
651-201-4601 or 800-798-9050
www.health.state.mn.us/divs/eh/air

Volatile Organic Compounds - VOCs – page 2

Most studies to date have been conducted on single chemicals. Less is know about the health effects of combined chemical exposure. The best health protection measure is to limit your exposure to products and materials that contain VOCs when possible. If you think you may be having health problems caused by VOC exposure consult an occupational/environmental health physician who specializes in this area

Are some people at greater risk from VOC exposure than others?

Persons with respiratory problems such as asthma, young children, elderly, and persons with heightened sensitivity to chemicals may be more susceptible to illness from VOC exposure.

How can I tell what levels of VOC are in my home?

Some home screening kits are available to measure total volatile organic compound (TVOC) levels, and some individual VOCs. These home sampling kits should be viewed as providing "ballpark" amount of VOCs in the indoor air. Conditions such as ventilation, temperature and humidity can cause VOC concentrations to fluctuate daily

Prior to testing conduct an inspection of your home for some common sources of VOCs such as:

- New carpeting
- New furniture
- Idling automobile in attached garage
- Recent painting
- Chemicals stored in the home
- Recently applied adhesives
- New plastic or electronic devices

Once you determine the probable source of VOCs, steps can be taken to reduce your exposure. If you are unable to determine the source, a professional indoor air quality investigator / industrial hygienist can be consulted. MDH has a service provider list along with recommendations on selection. MDH also has a guidance document that can be used for investigating possible VOC contamination entitled "Indoor Air Sampling at VOC contaminated sites"

How do I reduce the levels of VOCs in my home?

Most products containing VOCs will off-gas within a short period of time although some will continue to give off trace amounts of VOCs for a long period of time. The best means of reducing VOC exposure is to eliminate products containing VOCs or use low emitting VOC products.

Some steps you can take to reduce your exposure to VOC in the home are:

- Source control
  - eliminate products from home that have high levels of VOCs
  - purchase new products that contain low or no VOCs (environmentally preferable purchasing)
- Ventilation – open doors and windows, use fans.
- Control climate – as temperature and humidity increase some chemicals will off gas more.
- Treat the source – airtight sealers can be used to coat over some products. However, caution is advised in choosing the coating product as this could introduce new VOCs into the air while controlling for others.
- Air cleaners – look for ones with activated charcoal filtration designed to remove chemicals from the air.
- Remove unused chemicals from the home. Check with city or county for household hazardous waste collection sites.
- Perform renovations when home is unoccupied.

For more information on VOCs or other Indoor Air Quality Issues Contact:

The Minnesota Department of Health
Indoor Air Unit
625 Robert Street North, PO Box 64975
St. Paul, MN 55164-0975
651/201-4601 or 800/798-9050
View the Air Quality web page at:
www.health.state.mn.us/divs/eh/air

To require this document in another form contact:
Call 651/201-4601. TTY: 651/201-5797 or Minnesota Relay Service TTY: 1- 800/627-3529.

IC#141-1381
Revised 9/05
Printed on recycled paper.

SEMI-VOLATILE ORGANIC COMPOUNDS (SVOCs)

U.S. Environmental Protection Agency

Mid-Atlantic Brownfields

Serving: Delaware, District of Columbia, Maryland, Pennsylvania, Virginia, and West Virginia

Mid-Atlantic Cleanup
Brownfields Home
News and Events
Pilots/Grants
Grants Information
Successes
Technical Support
State Brownfields Programs
Federal Partnership Resource Guide
Related Laws and Regulations
Contacts

Semi-Volitile Organic Compounds

This Fact Sheet is presented by the U. S. Environmental Protection Agency, Region III (EPA) to assist in the selection of analytical parameters and the associated Quality Assurance and Quality Control (QA/QC) procedures to be utilized in Phase II Environmental Assessments under the U.S. Environmental Protection Agency (EPA) Brownfields initiative. This fact sheet is presented for informational purposes only, and should not be construed as a federal policy or directive. The Brownfields Coordinator for this region may be reached at 215-814-5000.

A semivolatile organic compound is an organic compound which has a boiling point higher than water and which may vaporize when exposed to temperatures above room temperature. Semivolatile organic compounds include phenols and polynuclear aromatic hydrocarbons (PAH).

LIST OF SEMIVOLATILE ORGANIC COMPOUNDS *

- Phenol
- Bis(2-chloroethyl)ether
- 2-Chlorophenol
- 1,3-Dichlorobenzene
- 1,4-Dichlorobenzene
- 1,2-Dichlorobenzene
- 2-Methylphenol
- Bis(2-chloroisopropyl)ether
- 4-Methylphenol
- n-Nitroso-di-n-propylamine
- Hexachloroethane
- Nitrobenzene
- Isophorone
- 2-Nitrophenol
- 2,4-Dimethlyphenol
- Bis(2-chloroethoxy)methane
- 2,4-Dichlorophenol
- 1,2,4-Trichlorobenzene
- Naphthalene
- 4-Chloroaniline
- Hexachlorobutadiene
- 4-Chloro-3-methylphenol
- 2-Methlynaphthalene
- Hexachlorocyclopentadiene
- 2,4,6-Trichlorophenol
- 2,4,5-Trichlorophenol
- 2-Chloronaphthalene
- 2-Nitroaniline
- Dimethylphthalate
- Acenaphthylene
- 2,6-Dinitrotoluene

- 3-Nitroaniline
- Acenaphthene
- 2,4-Dinitrophenol
- 4-Nitrophenol
- 4-Bromophenyl-phenylether
- Hexachlorobenzene
- Pentachlorophenol
- Phenanthrene
- Anthracene
- Carbazole
- Di-n-butylphthalate
- Fluoranthene
- Pyrene
- Butylbenzylphthalate
- 3,3'-Dichlorobenzidine
- Benzo(a)anthracene
- Chrysene
- Bis(2-ethylhexyl)phthalate
- Di-n-octylphthalate
- Benzo(b)fluoranthene
- Benzo(k)fluoranthene
- Benzo(a)pyrene
- Indeno(1,2,3-cd)pyrene
- Dibenz(a,h)anthracene
- Benzo(g,h,i)perylene

* Please note: The list above corresponds to the EPA Contract Laboratory Program (CLP) semivolatile organic list, and is not a complete list of all toxic semivolatile organic compounds. If the site history suggests a semivolatile organic compound may be present which is not on this list, the compound should be included in the requested analysis.

ANALYSIS METHODS

Please note that the methods listed below are EPA approved and the most commonly used by EPA and their contractors. However, they are not the only methods for the analysis of semivolatile organic compounds. In addition, these are not drinking water test methods.

METHOD	APPLICABLE MATRICES
EPA 625 or 1625 (1)	Aqueous
EPA SW-846 3010 or 3020/8250 or 8270 (2)	Aqueous
EPA SW-846 3500 or 3550/8250 or 8270 (2)	Soil/Sediment & Waste
EPA CLP Statement of Work 3/90	Aqueous & Soil/Sediment
EPA SW-846 8100 or 8310 (2) 610 (1)	Water and Soil/Sediment for PAH
EPA SW-846 8040 (2) or 604 (1)	Water and Soil/Sediment for Phenols

1. U.S. Environmental Protection Agency (EPA). 1992. *Test Methods for Organic Chemical Analysis of Municipal and Industrial Wastewater.* Washington, D.C. July.
2. EPA. 1986. *Test Methods for Evaluating Solid Waste*. SW-846. Washington, D.C. September.

COLLECTION MEDIA/VOLUME

Listed below are the EPA-recommended preservation and holding times as well as suggested glassware.

MATRIX	GLASSWARE	VOLUME	PRESERVATIVE	HOLDING TIME
Soil/Sediment	8-oz wide mouthed jar	1 8-oz jar	ice to 4° C	14 days
Aqueous	32-oz amber bottle	2 amber bottles	ice to 4° C	7 days
Waste	8-oz wide mouth jar	1 8-oz jar	none required (ice preferred)	none (try not to exceed 14 days)

MINIMUM LABORATORY QUALITY CONTROL MEASURES

The laboratory should have Standard Operating Procedures available for review for the semivolatile organic compound analyses and for all associated methods needed to complete the semivolatile analysis, such as total solids, instrument maintenance, sample handling, and sample documentation procedures. In addition, the laboratory should have a Laboratory Quality Assurance/Quality Control Statement available for review which includes all key personnel qualifications.

QC TYPE	FREQUENCY OF ANALYSIS	ACCEPTABLE LIMITS
Gas Chromatograph/Mass Spectrometer (GC/MS) Tuning	Once per day or more frequently if required by method	See method criteria for acceptable limits
Initial Calibration	Prior to analysis of samples (minimum three concentration levels for every compound and an instrument blank)	% Relative Standard Deviation of Response Factors of ≤ 30 (see method for any allowable variations), and a minimum Response Factor of ≥ 0.05 (see method for calculation)
Continuing Calibration	Once per day (mid-level standard containing all compounds) or more frequently if required by method	% Difference for Response Factor of ≤ 25 (see method for any allowable variations), and a minimum Response Factor of ≥ 0.05 (see method for calculation)
Method Blank	Once per extraction batch	See method for allowable limits
Internal Standards	Six per sample (see method for suggested internal standard compounds)	-50% to + 100% of Daily standard area and retention time shift (limits depend if packed or capillary column, see method)

Matrix Spike/Matrix Spike Duplicate	One set of MS/MSD per 20 samples or analysis set	See method for allowable limits
Surrogate Spikes	Added to each sample (see method for suggested surrogate compounds)	Report recovery

MINIMUM DATA PACKAGE REQUIREMENTS

- Sample results in a tabular form (if soil or sediment) reported on a dry weight basis.
- Report % moisture or % solids for all soil and sediment samples.
- Report sample volumes or weights, as well as any dilution factors, for each sample analysis.
- Return copy of the chain of custody form sent with the samples with laboratory receipt acknowledgment, and the internal or laboratory chain of custody forms.
- Method blank results.
- GC/MS tuning data summary.
- GC/MS initial and continuing calibration data summary forms.
- GC/MS internal standard data for samples and associated daily standard.
- Surrogate spike recoveries, either on a separate table or with the results, including laboratory QC limits.
- Matrix spike recovery tables, including laboratory recovery and relative percent difference QC limits.
- Date samples were analyzed, on a separate sheet, tune sheet, or results page.
- Optional: sample, standard and blank chromatograms, quantitation sheets, mass spectra, instrument run logs, and total solids logs.

Note: The optional QC must be maintained by laboratory for at least one year for possible future QC audits.

United States Environmental Protection Agency, 1650 Arch Street, Philadelphia, PA 19103-2029
Phone: (800) 438-2474

Last updated on Wednesday, September 28th, 2005
URL: http://www.epa.gov/reg3hwmd/bfs/regional/analytical/semi-volitile.htm

ATSDR
AGENCY FOR TOXIC SUBSTANCES AND DISEASE REGISTRY

POLYCYCLIC AROMATIC HYDROCARBONS (PAHs)

Agency for Toxic Substances and Disease Registry ToxFAQs

September 1996

This fact sheet answers the most frequently asked health questions (FAQs) about polycyclic aromatic hydrocarbons (PAHs). For more information, call the ATSDR Information Center at 1-888-422-8737. This fact sheet is one in a series of summaries about hazardous substances and their health effects. This information is important because this substance may harm you. The effects of exposure to any hazardous substance depend on the dose, the duration, how you are exposed, personal traits and habits, and whether other chemicals are present.

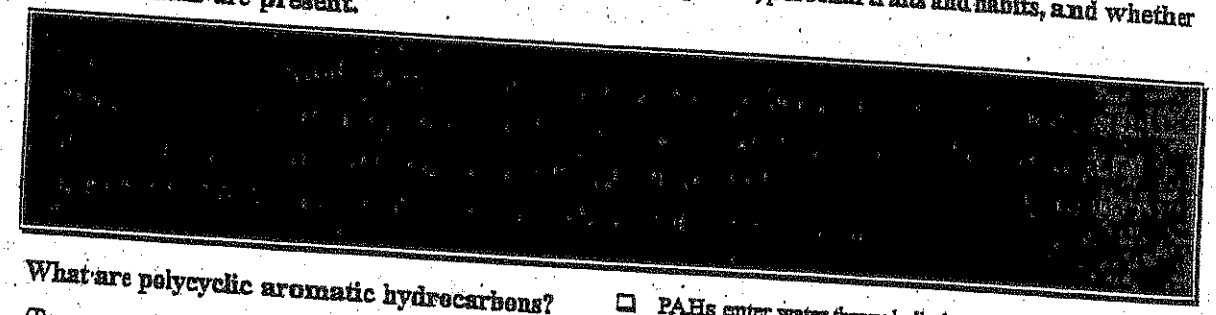

What are polycyclic aromatic hydrocarbons?

(Pronounced pŏl′ē-sī′klĭk ăr′ə-măt′ĭk hī′drə-kär′bənz)

Polycyclic aromatic hydrocarbons (PAHs) are a group of over 100 different chemicals that are formed during the incomplete burning of coal, oil and gas, garbage, or other organic substances like tobacco or charbroiled meat. PAHs are usually found as a mixture containing two or more of these compounds, such as soot.

Some PAHs are manufactured. These pure PAHs usually exist as colorless, white, or pale yellow-green solids. PAHs are found in coal tar, crude oil, creosote, and roofing tar, but a few are used in medicines or to make dyes, plastics, and pesticides.

What happens to PAHs when they enter the environment?

- PAHs enter the air mostly as releases from volcanoes, forest fires, burning coal, and automobile exhaust.
- PAHs can occur in air attached to dust particles.
- Some PAH particles can readily evaporate into the air from soil or surface waters.
- PAHs can break down by reacting with sunlight and other chemicals in the air, over a period of days to weeks.
- PAHs enter water through discharges from industrial and wastewater treatment plants.
- Most PAHs do not dissolve easily in water. They stick to solid particles and settle to the bottoms of lakes or rivers.
- Microorganisms can break down PAHs in soil or water after a period of weeks to months.
- In soils, PAHs are most likely to stick tightly to particles; certain PAHs move through soil to contaminate underground water.
- PAH contents of plants and animals may be much higher than PAH contents of soil or water in which they live.

How might I be exposed to PAHs?

- Breathing air containing PAHs in the workplace of coking, coal-tar, and asphalt production plants; smokehouses; and municipal trash incineration facilities.
- Breathing air containing PAHs from cigarette smoke, wood smoke, vehicle exhausts, asphalt roads, or agricultural burn smoke.
- Coming in contact with air, water, or soil near hazardous waste sites.
- Eating grilled or charred meats; contaminated cereals, flour, bread, vegetables, fruits, meats; and processed or pickled foods.
- Drinking contaminated water or cow's milk.

MSDS Material Safety Data Sheet

From: Mallinckrodt Baker, Inc.
222 Red School Lane
Phillipsburg, NJ 08865

JTBaker

24 Hour Emergency Telephone: 908-859-2151
CHEMTREC: 1-800-424-9300
National Response in Canada
CANUTEC: 613-996-6666
Outside U.S. And Canada
Chemtrec: 703-527-3887

[redacted]

All non-emergency questions should be directed to Customer Service (1-800-582-2537) for assistance.

ANTHRACENE

1. Product Identification

Synonyms: Paranaphthalene; Green Oil; Anthracene 90-95%
CAS No.: 120-12-7
Molecular Weight: 178.23
Chemical Formula: $(C_6H_4CH)_2$
Product Codes: B490

2. Composition/Information on Ingredients

Ingredient	CAS No	Percent	H
Anthracene	120-12-7	99 - 100%	-

3. Hazards Identification

Emergency Overview

WARNING! MAY CAUSE IRRITATION TO SKIN, EYES, AND

unconscious person. Get medical attention.

Skin Contact:

Remove any contaminated clothing. Wash skin with soap or mild detergent and water for at least 15 minutes. Get medical attention if irritation develops or persists.

Eye Contact:

In case of contact, immediately flush eyes with plenty of water for at least 15 minutes, lifting upper and lower eyelids occasionally. Call a physician if irritation persists.

---

5. Fire Fighting Measures

Fire:

Flash point: 121C (250F) CC

Low fire hazard when exposed to heat or flames.

Explosion:

Above the flash point, explosive vapor-air mixtures may be formed. Will burst into flame on contact with chromic acid.

Fire Extinguishing Media:

Water spray, dry chemical, alcohol foam, or carbon dioxide.

Special Information:

In the event of a fire, wear full protective clothing and NIOSH-approved self-contained breathing apparatus with full facepiece operated in the pressure demand or other positive pressure mode.

---

6. Accidental Release Measures

Ventilate area of leak or spill. Wear appropriate personal protective equipment as specified in Section 8. Spills: Sweep up and containerize for reclamation or disposal. Vacuuming or wet sweeping may be used to avoid dust dispersal. US Regulations (CERCLA) require reporting spills and releases to soil, water and air in excess of reportable quantities. The toll free number for the US Coast Guard National Response Center is (800) 424-8802.

---

7. Handling and Storage

Keep in a tightly closed container, stored in a cool, dry, ventilated area. Protect against physical damage. Isolate from incompatible substances. Containers of this material may be hazardous when empty since they retain product residues (dust, solids); observe all warnings and precautions listed for the product.

Material Safety Data Sheet
Pyrene, 98+%(gc)

ACC# 27452

Section 1 - Chemical Product and Company Identification

MSDS Name: Pyrene, 98+%(gc)
Catalog Numbers: AC180830000, AC180830250, AC180831000, AC180832500
Synonyms: Benzo[def]phenanthrene
Company Identification:
Acros Organics N.V.
One Reagent Lane
Fair Lawn, NJ 07410
For information in North America, call: 800-ACROS-01
For emergencies in the US, call CHEMTREC: 800-424-9300

Section 2 - Composition, Information on Ingredients

CAS#	Chemical Name	Percent	EINECS/ELINCS
129-00-0	Pyrene, ca	96.0	204-927-3

Section 3 - Hazards Identification

EMERGENCY OVERVIEW

Appearance: yellow powder.
Danger! Cancer hazard. May be fatal if inhaled. Causes respiratory tract irritation. May be harmful if swallowed. Causes skin irritation. May cause eye irritation. May cause cancer based on animal studies. The toxicological properties of this material have not been fully investigated.
Target Organs: None known.

Potential Health Effects
Eye: May cause eye irritation.
Skin: Causes skin irritation. Prolonged and/or repeated contact may cause irritation and/or dermatitis. Dermal applications may cause hyperemia (an excess of blood in a part), weight loss, and hematopoietic changes.
Ingestion: May cause digestive tract disturbances. The toxicological properties of this substance have not been fully investigated. May be harmful if swallowed.
Inhalation: May be fatal if inhaled. Causes respiratory tract irritation. Inhalation of dust may cause respiratory tract irritation.
Chronic: May cause cancer according to animal studies. Chronic effects may include leukocytosis and lengthened chronaxy of the leg muscle flexors.

Section 8 - Exposure Controls, Personal Protection

Engineering Controls: Use adequate ventilation to keep airborne concentrations low.
Exposure Limits

Chemical Name	ACGIH	NIOSH	OSHA - Final PELs
Pyrene, ca	0.2 mg/m3 TWA (as benzene soluble aerosol) (listed under Coal tar pitches).	0.1 mg/m3 TWA (cyclohexane-extractable fraction) (listed under Coal tar pitches).80 mg/m3 IDLH (listed under Coal tar pitches).	0.2 mg/m3 TWA (as benzene soluble fraction) (listed under Coal tar pitches).

OSHA Vacated PELs: Pyrene, ca: No OSHA Vacated PELs are listed for this chemical.
Personal Protective Equipment
Eyes: Wear appropriate protective eyeglasses or chemical safety goggles as described by OSHA's eye and face protection regulations in 29 CFR 1910.133 or European Standard EN166.
Skin: Wear appropriate protective gloves to prevent skin exposure.
Clothing: Wear appropriate protective clothing to prevent skin exposure.
Respirators: Follow the OSHA respirator regulations found in 29 CFR 1910.134 or European Standard EN 149. Always use a NIOSH or European Standard EN 149 approved respirator when necessary.

Section 9 - Physical and Chemical Properties

Physical State: Powder
Appearance: yellow
Odor: None reported.
pH: Not available.
Vapor Pressure: < 1 mm Hg @20C
Vapor Density: Not available.
Evaporation Rate: Not available.
Viscosity: Not available.
Boiling Point: 404 deg C @ 760.00mmHg
Freezing/Melting Point:156 deg C
Decomposition Temperature: Not available.
Solubility: 1.271
Specific Gravity/Density: Not available.
Molecular Formula:C16H10
Molecular Weight:202.25

Section 10 - Stability and Reactivity

Chemical Stability: Stable under normal temperatures and pressures.

Physical: No information available.
Other: Reported BCF: rainbow trout, 72); goldfish, 457; fathead minnow, 600-970. Based on these values, minimal to moderate bioconcentration of pyrene in aquatic organisms would be expected.

Section 13 - Disposal Considerations

Chemical waste generators must determine whether a discarded chemical is classified as a hazardous waste. US EPA guidelines for the classification determination are listed in 40 CFR Parts 261.3. Additionally, waste generators must consult state and local hazardous waste regulations to ensure complete and accurate classification.
RCRA P-Series: None listed.
RCRA U-Series: None listed.

Section 14 - Transport Information

	US DOT	Canada TDG
Shipping Name:	DOT regulated - small quantity provisions apply (see 49CFR173.4)	No information available.
Hazard Class:		
UN Number:		
Packing Group:		

Section 15 - Regulatory Information

US FEDERAL

TSCA
CAS# 129-00-0 is listed on the TSCA inventory.
Health & Safety Reporting List
CAS# 129-00-0: Effective 6/1/87, Sunset 6/1/97
Chemical Test Rules
None of the chemicals in this product are under a Chemical Test Rule.
Section 12b
None of the chemicals are listed under TSCA Section 12b.
TSCA Significant New Use Rule
None of the chemicals in this material have a SNUR under TSCA.
CERCLA Hazardous Substances and corresponding RQs
CAS# 129-00-0: 5000 lb final RQ; 2270 kg final RQ
SARA Section 302 Extremely Hazardous Substances
CAS# 129-00-0: 1000 lb TPQ (lower threshold); 10000 lb TPQ (upper thre shold)

SARA Codes
CAS # 129-00-0: acute, chronic.
Section 313 No chemicals are reportable under Section 313.
Clean Air Act:

International Chemical Safety Cards

BENZ(a)ANTHRACENE

ICSC: 0385

BENZ(a)ANTHRACENE
1,2-Benzoanthracene
Benzo(a)anthracene
2,3-Benzphenanthrene
Naphthanthracene
$C_{18}H_{12}$
Molecular mass: 228.3

CAS # 56-55-3
RTECS # CV9275000
ICSC # 0385
EC # 601-033-00-9

TYPES OF HAZARD/ EXPOSURE	ACUTE HAZARDS/ SYMPTOMS	PREVENTION	FIRST AID/ FIRE FIGHTING
FIRE	Combustible.		Water spray, powder. In case of fire in the surroundings: all extinguishing agents allowed.
EXPLOSION	Finely dispersed particles form explosive mixtures in air.	Prevent deposition of dust; closed system, dust explosion-proof electrical equipment and lighting.	
EXPOSURE		AVOID ALL CONTACT!	
• INHALATION		Local exhaust or breathing protection.	Fresh air, rest.
• SKIN		Protective gloves. Protective clothing.	Remove contaminated clothes. Rinse and then wash skin with water and soap.
• EYES		Safety goggles, face shield, or eye protection in combination with breathing protection.	First rinse with plenty of water for several minutes (remove contact lenses if easily possible), then take to a doctor.
• INGESTION		Do not eat, drink, or smoke during work. Wash hands before eating.	Rinse mouth.

SPILLAGE DISPOSAL	STORAGE	PACKAGING & LABELLING

ENVIRONMENTAL DATA	In the food chain important to humans, bioaccumulation takes place, specifically in seafood.

NOTES

This substance is one of many polycyclic aromatic hydrocarbons - standards are usually established for them as mixtures, e.g., coal tar pitch volatiles. However, it may be encountered as a laboratory chemical in its pure form. Insufficient data are available on the effect of this substance on human health, therefore utmost care must be taken. Do NOT take working clothes home. Tetraphene is a common name.

ADDITIONAL INFORMATION

ICSC: 0385

BENZ(a)ANTHRACENE

© IPCS, CEC, 1993

IMPORTANT LEGAL NOTICE:	Neither the CEC or the IPCS nor any person acting on behalf of the CEC or the IPCS is responsible for the use which might be made of this information. This card contains the collective views of the IPCS Peer Review Committee and may not reflect in all cases all the detailed requirements included in national legislation on the subject. The user should verify compliance of the cards with the relevant legislation in the country of use.

Skin: Get medical aid. Immediately flush skin with plenty of water for at least 15 minutes while removing contaminated clothing and shoes. Wash clothing before reuse.
Ingestion: Do not induce vomiting. If victim is conscious and alert, give 2-4 cupfuls of milk or water. Never give anything by mouth to an unconscious person. Get medical aid immediately.
Inhalation: Get medical aid immediately. Remove from exposure and move to fresh air immediately. If not breathing, give artificial respiration. If breathing is difficult, give oxygen.
Notes to Physician: Treat symptomatically and supportively.

Section 5 - Fire Fighting Measures

General Information: As in any fire, wear a self-contained breathing apparatus in pressure-demand, MSHA/NIOSH (approved or equivalent), and full protective gear. During a fire, irritating and highly toxic gases may be generated by thermal decomposition or combustion. This material in sufficient quantity and reduced particle size is capable of creating a dust explosion.
Extinguishing Media: Use water spray, dry chemical, carbon dioxide, or chemical foam.
Flash Point: Not applicable.
Autoignition Temperature: Not available.
Explosion Limits, Lower: Not available.
Upper: Not available.
NFPA Rating: (estimated) Health: ; Flammability: 1; Instability:

Section 6 - Accidental Release Measures

General Information: Use proper personal protective equipment as indicated in Section 8.
Spills/Leaks: Vacuum or sweep up material and place into a suitable disposal container. Clean up spills immediately, observing precautions in the Protective Equipment section. Wear a self contained breathing apparatus and appropriate personal protection. (See Exposure Controls, Personal Protection section). Provide ventilation.

Section 7 - Handling and Storage

Handling: Wash thoroughly after handling. Wash hands before eating. Avoid contact with eyes, skin, and clothing. Use only with adequate ventilation. Avoid breathing dust.
Storage: Store in a tightly closed container. Store in a cool, dry area away from incompatible substances.

Section 8 - Exposure Controls, Personal Protection

Conditions to Avoid: Dust generation.
Incompatibilities with Other Materials: Strong oxidizing agents.
Hazardous Decomposition Products: Carbon monoxide, carbon dioxide.
Hazardous Polymerization: Has not been reported.

Section 11 - Toxicological Information

RTECS#:
CAS# 218-01-9: GC0700000
LD50/LC50:
Not available.

Carcinogenicity:
CAS# 218-01-9:

- **ACGIH:** A3 - Confirmed animal carcinogen with unknown relevance to humans
- **California:** carcinogen, initial date 1/1/90
- **NTP:** Suspect carcinogen (listed as Polycyclic aromatic hydrocarbons).
- **IARC:** Group 1 carcinogen (listed as Coal tar pitches).

Epidemiology: No information available.
Teratogenicity: No information available.
Reproductive Effects: No information available.
Neurotoxicity: No information available.
Mutagenicity: Chrysene was mutagenic to S. Typhimurium in the presence of an exogenous metabolic system.
Other Studies: Genotoxicity : Salmonella typhimurium TA97,TA98,TA100 with metabolic activation positive (Sakai.M.et al Mutat.Res1985); Saccharomyces cerrevisae (Miotic recombination) D3 strain 330mg/kg negative.

Section 12 - Ecological Information

Ecotoxicity: Water flea LC50 = 1.9 mg/L; 2 Hr.; Unspecified Fish toxicity : LC50 (96hr) Neauthes arenacedentata >1ppm.(Rossi,S.S. et al Marine Pollut. Bull. 1978) Invertebrate toxicity : lethal treshold concentration (24hr) Daphnia Magna 0,7æg/l.(* Newsted,J.L. et al Environ. Toxicol. Chem. 1987) Bioaccumulation : 24hr Daphnia Magna log bioconcentration factor 3.7845 (*)
Environmental: Degradation studies : biodegradated by white rot fungus (Proc.Annu.Meet.Am.Wood-Preserv.Assoc.1989) May be utilised by axenic cultures of microorganisms e.g. Pseudomonas pancimobilis EPA505, which may have novel degradative systems(Mueller,J.G. et al ppl.Environ.Microbiol.1990; Mueller, J.G. et al Environ.Sci.Technol.1991).
Physical: Not found.

Clean Water Act:

None of the chemicals in this product are listed as Hazardous Substances under the CWA. CAS# 218-01-9 is listed as a Priority Pollutant under the Clean Water Act.

None of the chemicals in this product are listed as Toxic Pollutants under the CWA.

OSHA:

None of the chemicals in this product are considered highly hazardous by OSHA.

STATE

CAS# 218-01-9 can be found on the following state right to know lists: California, New Jersey, Pennsylvania, Minnesota, Massachusetts.

California Prop 65

The following statement(s) is(are) made in order to comply with the California Safe Drinking Water Act:

WARNING: This product contains Chrysene, a chemical known to the state of California to cause cancer.

California No Significant Risk Level: CAS# 218-01-9: 0.35 æg/day NSRL (oral)

European/International Regulations

European Labeling in Accordance with EC Directives

Hazard Symbols:

T

Risk Phrases:

R 45 May cause cancer.

R 50/53 Very toxic to aquatic organisms, may cause long-term adverse effects in the aquatic environment.

Safety Phrases:

S 45 In case of accident or if you feel unwell, seek medical advice immediately (show the label where possible).

S 53 Avoid exposure - obtain special instructions before use.

S 60 This material and its container must be disposed of as hazardous waste.

S 61 Avoid release to the environment. Refer to special instructions/safety data sheets.

WGK (Water Danger/Protection)

CAS# 218-01-9: No information available.

Canada - DSL/NDSL

CAS# 218-01-9 is listed on Canada's DSL List.

Canada - WHMIS

This product has a WHMIS classification of D2A.

Canadian Ingredient Disclosure List

CAS# 218-01-9 is listed on the Canadian Ingredient Disclosure List.

Section 16 - Additional Information

MSDS Creation Date: 6/30/1999

Material Safety Data Sheet
Benzo[a]pyrene, 98%

ACC# 37175

Section 1 - Chemical Product and Company Identification

MSDS Name: Benzo[a]pyrene, 98%
Catalog Numbers: AC105600000, AC105600010, AC105601000, AC377200000, AC377200010, AC377201000 AC377201000
Synonyms: 3,4-Benzopyrene; 3,4-Benzpyrene; Benzo[def]chrysene.
Company Identification:

Acros Organics N.V.
One Reagent Lane
Fair Lawn, NJ 07410

For information in North America, call: 800-ACROS-01
For emergencies in the US, call CHEMTREC: 800-424-9300

Section 2 - Composition, Information on Ingredients

CAS#	Chemical Name	Percent	EINECS/ELINCS
50-32-8	Benzo[a]pyrene	>96	200-028-5

Section 3 - Hazards Identification

EMERGENCY OVERVIEW

Appearance: yellow to brown powder.
Danger! May cause heritable genetic damage. Cancer hazard. May cause harm to the unborn child. May impair fertility. May cause eye, skin, and respiratory tract irritation. Toxic to aquatic organisms, may cause long-term adverse effects in the aquatic environment.
Target Organs: Reproductive system.

Potential Health Effects
Eye: May cause eye irritation.
Skin: May cause skin irritation. May be harmful if absorbed through the skin.
Ingestion: May cause irritation of the digestive tract. The toxicological properties of this substance have not been fully investigated. May be harmful if swallowed.
Inhalation: May cause respiratory tract irritation. The toxicological properties of this substance have not been fully investigated. May be harmful if inhaled.
Chronic: May cause cancer in humans. May cause reproductive and fetal effects. Laboratory experiments have resulted in mutagenic effects.

Storage: Store in a tightly closed container. Store in a cool, dry, well-ventilated area away from incompatible substances.

Section 8 - Exposure Controls, Personal Protection

Engineering Controls: Facilities storing or utilizing this material should be equipped with an eyewash facility and a safety shower. Use adequate ventilation to keep airborne concentrations low.

Exposure Limits

Chemical Name	ACGIH	NIOSH	OSHA - Final PELs
Benzo[a]pyrene	0.2 mg/m3 TWA (as benzene soluble aerosol) (listed under Coal tar pitches).	0.1 mg/m3 TWA (cyclohexane-extractable fraction) (listed under Coal tar pitches).80 mg/m3 IDLH (listed under Coal tar pitches).	0.2 mg/m3 TWA (as benzene soluble fraction) (listed under Coal tar pitches).

OSHA Vacated PELs: Benzo[a]pyrene: No OSHA Vacated PELs are listed for this chemical.

Personal Protective Equipment

Eyes: Wear appropriate protective eyeglasses or chemical safety goggles as described by OSHA's eye and face protection regulations in 29 CFR 1910.133 or European Standard EN166.

Skin: Wear appropriate protective gloves to prevent skin exposure.

Clothing: Wear appropriate protective clothing to prevent skin exposure.

Respirators: A respiratory protection program that meets OSHA's 29 CFR 1910.134 and ANSI Z88.2 requirements or European Standard EN 149 must be followed whenever workplace conditions warrant a respirator's use.

Section 9 - Physical and Chemical Properties

Physical State: Powder
Appearance: yellow to brown
Odor: faint aromatic odor
pH: Not available.
Vapor Pressure: Not available.
Vapor Density: Not available.
Evaporation Rate: Not available.
Viscosity: Not available.
Boiling Point: 495 deg C @ 760 mm Hg
Freezing/Melting Point:175 - 179 deg C
Decomposition Temperature: Not available.
Solubility: 1.60x10-3 mg/l @25°C
Specific Gravity/Density: Not available.
Molecular Formula:C20H12
Molecular Weight:252.31

RCRA U-Series:
CAS# 50-32-8: waste number U022.

Section 14 - Transport Information

	US DOT	Canada TDG
Shipping Name:	ENVIRONMENTALLY HAZARDOUS SUBSTANCE, SOL (Benzo{a} pyrene)	ENVIRONMENTALLY HAZARDOUS SUBSTANCE, SOL (Benzo{a} pyrene)
Hazard Class:	9	9
UN Number:	UN3077	UN3077
Packing Group:	III	III

Section 15 - Regulatory Information

US FEDERAL

TSCA

CAS# 50-32-8 is listed on the TSCA inventory.

Health & Safety Reporting List

None of the chemicals are on the Health & Safety Reporting List.

Chemical Test Rules

None of the chemicals in this product are under a Chemical Test Rule.

Section 12b

None of the chemicals are listed under TSCA Section 12b.

TSCA Significant New Use Rule

None of the chemicals in this material have a SNUR under TSCA.

CERCLA Hazardous Substances and corresponding RQs

CAS# 50-32-8: 1 lb final RQ; 0.454 kg final RQ

SARA Section 302 Extremely Hazardous Substances

None of the chemicals in this product have a TPQ.

SARA Codes

CAS # 50-32-8: acute, chronic.

Section 313

This material contains Benzo[a]pyrene (CAS# 50-32-8, >96%),which is subject to the reporting requirements of Section 313 of SARA Title III and 40 CFR

Clean Air Act:

This material does not contain any hazardous air pollutants.
This material does not contain any Class 1 Ozone depletors.
This material does not contain any Class 2 Ozone depletors.

Clean Water Act:

None of the chemicals in this product are listed as Hazardous Substances under the CWA. CAS# 50-32-8 is listed as a Priority Pollutant under the Clean Water Act.
None of the chemicals in this product are listed as Toxic Pollutants under the CWA.

OSHA:

None of the chemicals in this product are considered highly hazardous by OSHA.

STATE

CAS# 50-32-8 can be found on the following state right to know lists: California,

shall Fisher be liable for any claims, losses, or damages of any third party or for lost profits or any special, indirect, incidental, consequential or exemplary damages, howsoever arising, even if Fisher has been advised of the possibility of such damages.

WARNING! HARMFUL IF SWALLOWED OR INHALED. CAUSES IRRITATION TO SKIN, EYES AND RESPIRATORY TRACT. MAY CAUSE ALLERGIC SKIN REACTION. MAY AFFECT LIVER, KIDNEY, BLOOD AND CENTRAL NERVOUS SYSTEM. COMBUSTIBLE.

J.T. Baker SAF-T-DATA(tm) Ratings (Provided here for your convenience)

Health Rating: 2 - Moderate
Flammability Rating: 2 - Moderate
Reactivity Rating: 0 - None
Contact Rating: 2 - Moderate
Lab Protective Equip: GOGGLES; LAB COAT
Storage Color Code: Red (Flammable)

Potential Health Effects

Inhalation:
Inhalation of dust or vapors can cause headache, nausea, vomiting, extensive sweating, and disorientation. The predominant reaction is delayed intravascular hemolysis with symptoms of anemia, fever, jaundice, and kidney or liver damage.
Ingestion:
Toxic. Can cause headache, profuse perspiration, listlessness, dark urine, nausea, vomiting and disorientation. Intravascular hemolysis may also occur with symptoms similar to those noted for inhalation. Severe cases may produce coma with or without convulsions. Death may result from renal failure.
Skin Contact:
Can irritate the skin and, on prolonged contact, may cause rashes and allergy. "Sensitized" individuals may suffer a severe dermatitis.
Eye Contact:
Vapors and solid causes irritation, redness and pain. Very high exposures can damage the nerves of the eye.
Chronic Exposure:
Has led to cataract formation in eyes. May cause skin allergy.
Aggravation of Pre-existing Conditions:
Persons with pre-existing skin, blood or vascular disorders or impaired respiratory function may be more susceptible to the effects of the substance. Particularly susceptible individuals are found in the general population, most commonly in dark skinned races.

manner that does not disperse dust into the air. Use non-sparking tools and equipment. Reduce airborne dust and prevent scattering by moistening with water. Pick up spill for recovery or disposal and place in a closed container. US Regulations (CERCLA) require reporting spills and releases to soil, water and air in excess of reportable quantities. The toll free number for the US Coast Guard National Response Center is (800) 424-8802.

7. Handling and Storage

Keep in a tightly closed container, stored in a cool, dry, ventilated area. Protect against physical damage. Isolate from any source of heat or ignition. Keep away from moisture and oxidizers. Containers of this material may be hazardous when empty since they retain product residues (dust, solids); observe all warnings and precautions listed for the product.

8. Exposure Controls/Personal Protection

Airborne Exposure Limits:
- OSHA Permissible Exposure Limit (PEL):
10 ppm, 50 mg/m3.

- ACGIH Threshold Limit Value (TLV):
TWA= 10 ppm, 52 mg/m3
STEL= 15 ppm, 79 mg/m3.

Ventilation System:
A system of local and/or general exhaust is recommended to keep employee exposures below the Airborne Exposure Limits. Local exhaust ventilation is generally preferred because it can control the emissions of the contaminant at its source, preventing dispersion of it into the general work area. Please refer to the ACGIH document, *Industrial Ventilation, A Manual of Recommended Practices*, most recent edition, for details.

Personal Respirators (NIOSH Approved):
If the exposure limit is exceeded, a half-face respirator with an organic vapor cartridge and particulate filter (NIOSH type P95 or R95 filter) may be worn for up to ten times the exposure limit or the maximum use concentration specified by the appropriate regulatory agency or respirator supplier, whichever is lowest. A full-face piece respirator with an organic vapor cartridge and particulate filter (NIOSH P100 or R100 filter) may be worn up to 50 times the exposure limit, or the maximum use concentration specified by the appropriate regulatory agency or respirator supplier, whichever is lowest. Please note that N series filters are not recommended for this material. For emergencies or instances where the exposure levels are not known, use

Hazardous Polymerization:
Will not occur.
Incompatibilities:
Strong oxidizers, strong alkalis and strong mineral acids, mixtures of aluminum trichloride and benzoyl chloride. Reacts violently with chromic anhydride. Melted naphthalene will attack some forms of plastics, rubber, and coatings.
Conditions to Avoid:
Avoid heat, sparks, flames and other ignition sources and incompatibles.

11. Toxicological Information

Oral rat LD50: 490 mg/kg;
Inhalation rat LC50: 340 mg/m3, 1 hour;
Skin rabbit LD50: > 20 g/kg;
Irritation data: skin (open Draize) rabbit 495 mg, mild; eye (standard Draize) rabbit 100 mg, mild;
Investigated as a tumorigen, mutagen and reproductive effector.

---------\Cancer Lists\

Ingredient	---NTP Carcinogen--- Known	Anticipated	IARC Categ
Naphthalene (91-20-3)	No	No	None

12. Ecological Information

Environmental Fate:
When released into the soil, this material may biodegrade to a moderate extent. When released into the soil, this material is expected to leach into groundwater. When released into the soil, this material is expected to quickly evaporate. When released to water, this material is expected to quickly evaporate. When released into water, this material may biodegrade to a moderate extent. When released into the water, this material is expected to have a half-life between 1 and 10 days. This material may bioaccumulate to some extent. When released into the air, this material is expected to be readily degraded by reaction with photochemically produced hydroxyl radicals. When released into the air, this material is expected to have a half-life of less than 1 day.
Environmental Toxicity:
No information found.

Ingredient	Korea	--Canada-- DSL	NDSL	Phil.
Naphthalene (91-20-3)	Yes	Yes	No	Yes

---------\Federal, State & International Regulations - Part 1\---------

Ingredient	-SARA 302- RQ	TPQ	-------SARA 313-------- List	Chemical C
Naphthalene (91-20-3)	No	No	Yes	No

---------\Federal, State & International Regulations - Part 2\---------

Ingredient	CERCLA	-RCRA- 261.33	-TSCA- 8(d)
Naphthalene (91-20-3)	100	U165	No

Chemical Weapons Convention: No TSCA 12(b): No CDTA: No
SARA 311/312: Acute: Yes Chronic: Yes Fire: Yes Pressure: No
Reactivity: No (Pure / Solid)

Australian Hazchem Code: 2Z
Poison Schedule: S6
WHMIS:
This MSDS has been prepared according to the hazard criteria of the Controlled Products Regulations (CPR) and the MSDS contains all of the information required by the CPR.

16. Other Information

NFPA Ratings: Health: **2** Flammability: **2** Reactivity: **0**
Label Hazard Warning:
WARNING! HARMFUL IF SWALLOWED OR INHALED. CAUSES IRRITATION TO SKIN, EYES AND RESPIRATORY TRACT. MAY CAUSE ALLERGIC SKIN REACTION. MAY AFFECT LIVER, KIDNEY, BLOOD AND CENTRAL NERVOUS SYSTEM. COMBUSTIBLE.
Label Precautions:
Avoid contact with eyes, skin and clothing.
Avoid prolonged or repeated contact with skin.
Avoid breathing dust.
Avoid breathing vapor.
Keep container closed.
Use only with adequate ventilation.
Wash thoroughly after handling.

This information was last updated on July 15, 2004. We have tried to make it as accurate and useful as possible, but can take no responsibility for its use, misuse, or accuracy. We have not verified this information, and cannot guarantee that it is up-to-date.

given here.)

ORL-RAT LDLO 1500 mg kg^{-1}

IPR-RAT LDLO 250 mg kg^{-1}

ITR-RAT LDLO 25 mg kg^{-1}

IPR-MUS LDLO 100 mg kg^{-1}

Transport information

(The meaning of any UN hazard codes which appear in this section is given here.)
Hazard class 4.1. Packing group III. UN No 1325.

Personal protection

Safety glasses and gloves. Good ventilation and an inert atmosphere if working with powdered material.

[Return to Physical & Theoretical Chemistry Lab. Safety home page.]

This information was last updated on September 17, 2003. We have tried to make it as accurate and useful as possible, but can take no responsibility for its use, misuse, or accuracy. We have not verified this information, and cannot guarantee that it is up-to-date.

given here.)

IPR-MUS LD50 3.5 mg kg^{-1}

Risk phrases

(The meaning of any risk phrases which appear in this section is given here.)

R11 R36 R37 R38 (all for the powdered material only).

Transport information

(The meaning of any UN hazard codes which appear in this section is given here.)

UN Nos: 3089 (very fine powder), 3077 (fine powder); otherwise considered non-hazardous for air, sea and road freight.

Personal protection

Suitable ventilation if handling powder.

[Return to Physical & Theoretical Chemistry Lab. Safety home page.]

This information was last updated on November 16, 2004. Although we have tried to make it as accurate and useful as possible, we can take no responsibility for its use or misuse.

---

spontaneously. May react violently with titanium, ammonium nitrate, potassium perchlorate, hydrazoic acid. Incompatible with acids, oxidizing agents, sulfur.

Toxicology

Carcinogen. Toxic by all routes of entry. May cause sensitization by skin contact. Typical TLV 0.05 mg/m3

Toxicity data
(The meaning of any toxicological abbreviations which appear in this section is given here.)

IPR-RAT LD50 250 mg kg^{-1}

Risk phrases
(The meaning of any risk phrases which appear in this section is given here.)
R10 R17 R36 R37 R38 R40 R42 R43.

Transport information

(The meaning of any UN hazard codes which appear in this section is given here.)
UN No 3089. Packing group II. Hazard class 4.1.

Personal protection

Good ventilation. Wear gloves and safety glasses when handling the powder.

Safety phrases
(The meaning of any safety phrases which appear in this section is given here.)
S16 S22 S26 S36.

[Return to Physical & Theoretical Chemistry Lab. Safety home page.]

PESTICIDES AND PCBs

U.S. Environmental Protection Agency

Pesticides: Topical & Chemical Fact Sheets

Assessing Health Risks from Pesticides

January 1999
735-F-99-002

The Federal Government, in cooperation with the States, carefully regulates pesticides to ensure that they do not pose unreasonable risks to human health or the environment. As part of that effort, the Environmental Protection Agency (EPA) requires extensive test data from pesticide producers that demonstrate pesticide products can be used without posing harm to human health and the environment. EPA scientists and analysts carefully review these data to determine whether to register (license) a pesticide product or a use and whether specific restrictions are necessary. This fact sheet is a brief overview of EPA's process for assessing potential risks to human health when evaluating pesticide products.

Background

There are more than 865 active ingredients registered as pesticides, which are formulated into thousands of pesticide products that are available in the marketplace. About 350 pesticides are used on the foods we eat, and to protect our homes and pets.

EPA plays a critical role in evaluating these chemicals prior to registration, and in reevaluating older pesticides already on the market, to ensure that they can be used with a reasonable certainty of no harm. The process EPA uses for evaluating the health impacts of a pesticide is called risk assessment.

EPA uses the National Research Council's four-step process for human health risk assessment:

- **Step One**: Hazard Identification
- **Step Two**: Dose-Response Assessment
- **Step Three**: Exposure Assessment
- **Step Four**: Risk Characterization

Step One: Hazard Identification (Toxicology)

The first step in the risk assessment process is to identify potential health effects that may occur from different types of pesticide exposure. EPA considers the full spectrum of a pesticide's potential health effects.

Generally, for human health risk assessments, many toxicity studies are conducted on animals by pesticide companies in independent laboratories and evaluated for acceptability by EPA scientists. EPA evaluates pesticides for a wide range of adverse effects, from eye and skin irritation to cancer and birth defects in laboratory animals. EPA may also consult the public literature or other sources of supporting information on any aspect of the chemical.

Step Two: Dose-Response Assessment

Paracelsus, the Swiss physician and alchemist, the "father" of modern toxicology (1493-1541) said,

> "The dose makes the poison."

In other words, **the amount of a substance a person is exposed to** is as important as **how toxic the chemical might be.** For example, small doses of aspirin can be beneficial to people, but at very high doses, this common medicine can be deadly. In some individuals, even at very low doses, aspirin may be deadly.

Dose-response assessment involves considering the dose levels at which adverse effects were observed in test animals, and using these dose levels to calculate an equal dose in humans.

Step Three: Exposure Assessment

People can be exposed to pesticides in three ways:

1. Inhaling pesticides (inhalation exposure),
2. Absorbing pesticides through the skin (dermal exposure), and
3. Getting pesticides in their mouth or digestive tract (oral exposure).

Depending on the situation, pesticides could enter the body by any one or all of these routes. Typical sources of pesticide exposure include:

- **Food**
  Most of the foods we eat have been grown with the use of pesticides. Therefore, pesticide residues may be present inside or on the surfaces of these foods.

- **Home and Personal Use Pesticides**
  You might use pesticides in and around your home to control insects.

EPA: Pesticides - Assessing Health Risks from Pesticides

Page 2 of 5

Step Two: Dose-Response Assessment

Paracelsus, the Swiss physician and alchemist, the "father" of modern toxicology (1493-1541) said,

"The dose makes the poison."

In other words, the amount of a substance a person is exposed to is as important as how toxic the chemical might be. For example, small doses of aspirin can be beneficial to people, but at very high doses, this common medicine can be deadly. In some individuals, even at very low doses, aspirin may be deadly.

Dose-response assessment involves considering the dose levels at which adverse effects were observed in test animals, and using these dose levels to calculate an equal dose in humans.

Step Three: Exposure Assessment

People can be exposed to pesticides in three ways:

considered, and broad conclusions are made. EPA's role is to evaluate both toxicity and exposure and to determine the risk associated with use of the pesticide.

Simply put,

RISK = TOXICITY x EXPOSURE.

This means that the risk to human health from pesticide exposure depends on both the toxicity of the pesticide and the likelihood of people coming into contact with it. At least *some* exposure and *some* toxicity are required to result in a risk. For example, if the pesticide is very poisonous, but no people are exposed, there is no risk. Likewise, if there is ample exposure but the chemical is non-toxic, there is no risk. However, usually when pesticides are used, there is some toxicity and exposure, which results in a potential risk.

EPA recognizes that effects vary between animals of different species and from person to person. To account for this variability, *uncertainty factors* are built into the risk assessment. These uncertainty factors create an additional margin of safety for protecting people who may be exposed to the pesticides. FQPA requires EPA to use an extra 10-fold safety factor, if necessary, to protect infants and children from effects of the pesticide.

Types of Toxicity Tests EPA Requires for Human Health Risk Assessments

EPA evaluates studies conducted over different periods of time and that measure specific types of effects. These tests are evaluated to screen for potential health effects in infants, children and adults.

Acute Testing: Short-term exposure; a single exposure (dose).

- Oral, dermal (skin), and inhalation exposure
- Eye irritation
- Skin irritation
- Skin sensitization
- Neurotoxicity

Sub-chronic Testing: Intermediate exposure; repeated exposure over a longer period of time (i.e., 30-90 days).

- Oral, dermal (skin), and inhalation
- Neurotoxicity (nerve system damage)

Chronic Toxicity Testing: Long-term exposure; repeated exposure lasting for most of the test animal's life span. Intended to determine the effects of a pesticide after prolonged and repeated exposures.

- Chronic effects (non-cancer)
- Carcinogenicity (cancer)

Developmental and Reproductive Testing: Identify effects in the fetus of an exposed pregnant female (birth defects) and how pesticide exposure affects the ability of a test animal to successfully reproduce.

Mutagenicity Testing: Assess a pesticide's potential to affect the cell's genetic components.

Hormone Disruption: Measure effects for their potential to disrupt the endocrine system. The endocrine system consists of a set of glands and the hormones they produce that help guide the development, growth, reproduction, and behavior of animals including humans.

Risk Management

Once EPA completes the risk assessment process for a pesticide, we use this information to determine if (when used according to label directions), there is a reasonable certainty that the pesticide will not harm a person's health.

Using the conclusions of a risk assessment, EPA can then make a more informed decision regarding whether to approve a pesticide chemical or use, as proposed, or whether additional protective measures are necessary to limit occupational or non-occupational exposure to a pesticide. For example, EPA may prohibit a pesticide from being used on certain crops because consuming too much food treated with the pesticide may result in an unacceptable risk to consumers. Another example of protective measures is requiring workers to wear personal protective equipment (PPE) such as a respirator or chemical resistant gloves, or not allowing workers to enter treated crop fields until a specific period of time has passed.

If, after considering all appropriate risk reduction measures, the pesticide still does not meet EPA's safety standard, the Agency will not allow the proposed chemical or use. Regardless of the specific measures enforced, EPA's primary goal is to ensure that legal uses of the pesticide are protective of human health, especially the health of children, and the environment.

Human Health Risk Assessment and the Law

Federal law requires detailed evaluation of pesticides to protect human health and the environment. In 1996, Congress made significant changes to strengthen pesticide laws through the Food Quality Protection Act (FQPA). Many of these changes are key elements of the current risk assessment process. FQPA required that EPA consider:

- **A New Safety Standard**: FQPA strengthened the safety standard that pesticides must meet before being approved for use. EPA must ensure with a reasonable certainty that no harm will result from the legal uses of the pesticide.
- **Exposure from All Sources**: In evaluating a pesticide, EPA must estimate the combined risk from that pesticide from all non-occupational sources, such as:
  - Food Sources
  - Drinking Water Sources
  - Residential Sources
- **Cumulative Risk**: EPA is required to evaluate pesticides in light of similar toxic effects that different pesticides may share, or "a common mechanism of toxicity." At this time, EPA is developing a methodology for this type of assessment.
- **Special Sensitivity of Children to Pesticides**: EPA must ascertain whether there is an increased susceptibility from exposure to the pesticide to infants and children. EPA must build an additional 10-fold safety factor into risk assessments to ensure the protection of infants and children, unless it is determined that a lesser margin of safety will be safe for infants and children.

For More Information

If you would like more information about EPA's pesticide programs, contact the Communication Service Branch at (703) 305-5017 or visit the Pesticides Web site.

For more information on specific pesticides, or to inquire about the symptoms of pesticide poisoning, call the National Pesticide Information Center (NPIC), a toll-free hotline information at: 1-800-858-7378, or visit their Web site EXIT disclaimer .

Last updated on Monday, May 19th, 2003
URL: http://www.epa.gov/pesticides/factsheets/riskassess.htm

What is a Pesticide?

A pesticide is any substance or mixture of substances intended for preventing, destroying, repelling, or mitigating any pest. Pests can be insects, mice and other animals, unwanted plants (weeds), fungi, or microorganisms like bacteria and viruses. Though often misunderstood to refer only to *insecticides*, the term pesticide also applies to herbicides, fungicides, and various other substances used to control pests. Under United States law, a pesticide is also any substance or mixture of substances intended for use as a plant regulator, defoliant, or desiccant.

Many household products are pesticides. Did you know that all of these common products are considered pesticides?

- Cockroach sprays and baits
- Insect repellents for personal use.
- Rat and other rodent poisons.
- Flea and tick sprays, powders, and pet collars.
- Kitchen, laundry, and bath disinfectants and sanitizers.
- Products that kill mold and mildew.
- Some lawn and garden products, such as weed killers.
- Some swimming pool chemicals.

By their very nature, most pesticides create some risk of harm to humans, animals, or the environment because they are designed to kill or otherwise adversely affect living organisms. At the same time, pesticides are useful to society because of their ability to kill potential disease-causing organisms and control insects, weeds, and other pests. In the United States, the Office of Pesticide Programs of the Environmental Protection Agency is chiefly responsible for regulating pesticides. Biologically-based pesticides, such as pheromones and microbial pesticides, are becoming increasingly popular and often are safer than traditional chemical pesticides.

Here are some common kinds of pesticides and their function:

Algicides
Control algae in lakes, canals, swimming pools, water tanks, and other sites.

Antifouling agents
Kill or repel organisms that attach to underwater surfaces, such as boat bottoms.

Antimicrobials
Kill microorganisms (such as bacteria and viruses).

Attractants
Attract pests (for example, to lure an insect or rodent to a trap). (However, food is not onsidered a pesticide when used as an attractant.)

Biocides
Kill microorganisms.

Disinfectants and sanitizers
Kill or inactivate disease-producing microorganisms on inanimate objects.

Fungicides
Kill fungi (including blights, mildews, molds, and rusts).

Fumigants
Produce gas or vapor intended to destroy pests in buildings or soil.

ATSDR
AGENCY FOR TOXIC SUBSTANCES AND DISEASE REGISTRY

POLYCHLORINATED BIPHENYLS

Division of Toxicology ToxFAQs™

February 2001

This fact sheet answers the most frequently asked health questions (FAQs) about polychlorinated biphenyls. For more information, call the ATSDR Information Center at 1-888-422-8737. This fact sheet is one in a series of summaries about hazardous substances and their health effects. It's important you understand this information because this substance may harm you. The effects of exposure to any hazardous substance depend on the dose, the duration, how you are exposed, personal traits and habits, and whether other chemicals are present.

What are polychlorinated biphenyls?

Polychlorinated biphenyls are mixtures of up to 209 individual chlorinated compounds (known as congeners). There are no known natural sources of PCBs. PCBs are either oily liquids or solids that are colorless to light yellow. Some PCBs can exist as a vapor in air. PCBs have no known smell or taste. Many commercial PCB mixtures are known in the U.S. by the trade name Aroclor.

PCBs have been used as coolants and lubricants in transformers, capacitors, and other electrical equipment because they don't burn easily and are good insulators. The manufacture of PCBs was stopped in the U.S. in 1977 because of evidence they build up in the environment and can cause harmful health effects. Products made before 1977 that may contain PCBs include old fluorescent lighting fixtures and electrical devices containing PCB capacitors, and old microscope and hydraulic oils.

What happens to PCBs when they enter the environment?

- PCBs entered the air, water, and soil during their manufacture, use, and disposal; from accidental spills and leaks during their transport; and from leaks or fires in products containing PCBs.
- PCBs can still be released to the environment from hazardous waste sites; illegal or improper disposal of industrial wastes and consumer products; leaks from old electrical transformers containing PCBs; and burning of some wastes in incinerators.
- PCBs do not readily break down in the environment and thus may remain there for very long periods of time. PCBs can travel long distances in the air and be deposited in areas far away from where they were released. In water, a small amount of PCBs may remain dissolved, but most stick to organic particles and bottom sediments. PCBs also bind strongly to soil.
- PCBs are taken up by small organisms and fish in water. They are also taken up by other animals that eat these aquatic animals as food. PCBs accumulate in fish and marine mammals, reaching levels that may be many thousands of times higher than in water.

How might I be exposed to PCBs?

- Using old fluorescent lighting fixtures and electrical devices and appliances, such as television sets and refrigerators, that were made 30 or more years ago. These items may leak small amounts of PCBs into the air when they get hot during operation, and could be a source of skin exposure.
- Eating contaminated food. The main dietary sources of PCBs are fish (especially sportfish caught in contaminated lakes or rivers), meat, and dairy products.
- Breathing air near hazardous waste sites and drinking contaminated well water.
- In the workplace during repair and maintenance of PCB transformers; accidents, fires or spills involving transformers, fluorescent lights, and other old electrical devices; and disposal of PCB materials.

How can PCBs affect my health?

The most commonly observed health effects in people exposed to large amounts of PCBs are skin conditions such as acne and rashes. Studies in exposed workers have shown changes in blood and urine that may indicate liver damage. PCB exposures in the general population are not likely to result in skin and liver effects. Most of the studies of health effects of PCBs in the general population examined children of mothers who were exposed to PCBs.

Animals that ate food containing large amounts of PCBs for short periods of time had mild liver damage and some died. Animals that ate smaller amounts of PCBs in food over several weeks or months developed various kinds of health effects, including anemia; acne-like skin conditions; and liver, stomach, and thyroid gland injuries. Other effects

of PCBs in animals include changes in the immune system, behavioral alterations, and impaired reproduction. PCBs are not known to cause birth defects.

How likely are PCBs to cause cancer?

Few studies of workers indicate that PCBs were associated with certain kinds of cancer in humans, such as cancer of the liver and biliary tract. Rats that ate food containing high levels of PCBs for two years developed liver cancer. The Department of Health and Human Services (DHHS) has concluded that PCBs may reasonably be anticipated to be carcinogens. The EPA and the International Agency for Research on Cancer (IARC) have determined that PCBs are probably carcinogenic to humans.

How can PCBs affect children?

Women who were exposed to relatively high levels of PCBs in the workplace or ate large amounts of fish contaminated with PCBs had babies that weighed slightly less than babies from women who did not have these exposures. Babies born to women who ate PCB-contaminated fish also showed abnormal responses in tests of infant behavior. Some of these behaviors, such as problems with motor skills and a decrease in short-term memory, lasted for several years. Other studies suggest that the immune system was affected in children born to and nursed by mothers exposed to increased levels of PCBs. There are no reports of structural birth defects caused by exposure to PCBs or of health effects of PCBs in older children. The most likely way infants will be exposed to PCBs is from breast milk. Transplacental transfers of PCBs were also reported In most cases, the benefits of breast-feeding outweigh any risks from exposure to PCBs in mother's milk.

How can families reduce the risk of exposure to PCBs?

❑ You and your children may be exposed to PCBs by eating fish or wildlife caught from contaminated locations. Certain states, Native American tribes, and U.S. territories have issued advisories to warn people about PCB-contaminated fish and fish-eating wildlife. You can reduce your family's exposure to PCBs by obeying these advisories.

❑ Children should be told not play with old appliances, electrical equipment, or transformers, since they may contain PCBs.

❑ Children should be discouraged from playing in the dirt near hazardous waste sites and in areas where there was a transformer fire. Children should also be discouraged from eating dirt and putting dirty hands, toys or other objects in their mouths, and should wash hands frequently.

❑ If you are exposed to PCBs in the workplace it is possible to carry them home on your clothes, body, or tools. If this is the case, you should shower and change clothing before leaving work, and your work clothes should be kept separate from other clothes and laundered separately.

Is there a medical test to show whether I've been exposed to PCBs?

Tests exist to measure levels of PCBs in your blood, body fat, and breast milk, but these are not routinely conducted. Most people normally have low levels of PCBs in their body because nearly everyone has been environmentally exposed to PCBs. The tests can show if your PCB levels are elevated, which would indicate past exposure to above-normal levels of PCBs, but cannot determine when or how long you were exposed or whether you will develop health effects.

Has the federal government made recommendations to protect human health?

The EPA has set a limit of 0.0005 milligrams of PCBs per liter of drinking water (0.0005 mg/L). Discharges, spills or accidental releases of 1 pound or more of PCBs into the environment must be reported to the EPA. The Food and Drug Administration (FDA) requires that infant foods, eggs, milk and other dairy products, fish and shellfish, poultry and red meat contain no more than 0.2-3 parts of PCBs per million parts (0.2-3 ppm) of food. Many states have established fish and wildlife consumption advisories for PCBs.

References

Agency for Toxic Substances and Disease Registry (ATSDR). 2000. Toxicological profile for polychlorinated biphenyls (PCBs). Atlanta, GA: U.S. Department of Health and Human Services, Public Health Service.

Where can I get more information? For more information, contact the Agency for Toxic Substances and Disease Registry, Division of Toxicology, 1600 Clifton Road NE, Mailstop E-29, Atlanta, GA 30333. Phone: 1-888-422-8737, FAX: 404-498-0093. ToxFAQs™ Internet address is http://www.atsdr.cdc.gov/toxfaq.html. ATSDR can tell you where to find occupational and environmental health clinics. Their specialists can recognize, evaluate, and treat illnesses resulting from exposure to hazardous substances. You can also contact your community or state health or environmental quality department if you have any more questions or concerns.

METALS

Heavy Metals

Ads by Google
. Heavy Metals Analysis
. Arsenic Poisoning
. Soil Contamination
. Environment
Environment Health and Safety

Introduction

The **term heavy** metal refers to any metallic chemical element that h
and is toxic or poisonous at low concentrations. Examples of heavy m
(Hg), cadmium (Cd), arsenic (As), chromium (Cr), thallium (Tl), and le

Heavy metals are natural components of the Earth's crust. They cannot be degraded or destroyed.
enter our bodies via food, drinking water and air. As trace elements, some heavy metals (e.g. coppe
essential to maintain the metabolism of the human body. However, at higher concentrations they ca
metal poisoning could result, for instance, from drinking-water contamination (e.g. lead pipes), high
concentrations near emission sources, or intake via the food chain.

Heavy metals are dangerous because they tend to **bioaccumulate**. Bioaccumulation means an incr
of a chemical in a biological organism over time, compared to the chemical's concentration in the er
accumulate in living things any time they are taken up and stored faster than they are broken down
excreted.

Heavy metals can enter a water supply by industrial and consumer waste, or even from acidic rain b
releasing heavy metals into streams, lakes, rivers, and groundwater.

Environmental and health risks.

Now we are going to describe the effects of the heavy metals in the environment. The three most pe
Lead, Cadmium, and Mercury.

Effects of Antimony on the environment

Antimony is a metal used in the compound antimony trioxide, a flame retardant. It can also be foun
and ceramics and glass. Exposure to high levels of antimony for short periods of time causes nause
There is little information on the effects of long-term antimony exposure, but it is a suspected huma
antimony compounds do not bioaccumulate in aquatic life.

Effects of Cadmium on the environment

Cadmium derives its toxicological properties from its chemical similarity to zinc an essential micronu
and humans. Cadmium is biopersistent and, once absorbed by an organism, remains resident for m
for humans) although it is eventually excreted.

In humans, long-term exposure is associated with renal disfunction. High exposure can lead to obst
has been linked to lung cancer, although data concerning the latter are difficult to interpret due to c
Cadmium may also produce bone defects (osteomalacia, osteoporosis) in humans and animals. In a
linked to increased blood pressure and effects on the myocardium in animals, although most human
findings.

The average daily intake for humans is estimated as 0.15µg from air and 1µg from water. Smoking can lead to the inhalation of around 2-4µg of cadmium, but levels may vary widely.

In what form is emitted Cadmium?

Cadmium is produced as an inevitable by-product of zinc (or occasionally lead) refining, since these within the raw ore. However, once collected the cadmium is relatively easy to recycle.

The most significant use of cadmium is in nickel/cadmium batteries, as rechargeable or secondary p high output, long life, low maintenance and high tolerance to physical and electrical stress. Cadmiur corrosion resistance, particularly in high stress environments such as marine and aerospace applicat reliability is required; the coating is preferentially corroded if damaged. Other uses of cadmium are PVC, in alloys and electronic compounds. Cadmium is also present as an impurity in several product fertilisers, detergents and refined petroleum products.

In the general, non-smoking population the major exposure pathway is through food, via the additic agricultural soil from various sources (atmospheric deposition and fertiliser application) and uptake Additional exposure to humans arises through cadmium in ambient air and drinking water.

Effects of Chromium on the environment

Chromium is used in metal alloys and pigments for paints, cement, paper, rubber, and other materi can irritate the skin and cause ulceration. Long-term exposure can cause kidney and liver damage, circulatory and nerve tissue. Chromium often accumulates in aquatic life, adding to the danger of e been exposed to high levels of chromium.

Effects of Copper on the environment

Copper is an essential substance to human life, but in high doses it can cause anemia, liver and kidr and intestinal irritation. People with Wilson's disease are at greater risk for health effects from overe Copper normally occurs in drinking water from copper pipes, as well as from additives designed to c

Effects of Lead on the environment

In humans exposure to lead can result in a wide range of biological effects depending on the level a Various effects occur over a broad range of doses, with the developing foetus and infant being more High levels of exposure may result in toxic biochemical effects in humans which in turn cause proble haemoglobin, effects on the kidneys, gastrointestinal tract, joints and reproductive system, and acu the nervous system.

Lead poisoning, which is so severe as to cause evident illness, is now very rare indeed. At intermedi however, there is persuasive evidence that lead can have small, subtle, subclinical effects, particula developments in children. Some studies suggest that there may be a loss of up to 2 IQ points for a from 10 to 20µg/dl in young children.

Average daily lead intake for adults in the UK is estimated at 1.6µg from air, 20µg from drinking wa Although most people receive the bulk of their lead intake from food, in specific populations other s important, such as water in areas with lead piping and plumbosolvent water, air near point of sourc paint flakes in old houses or contaminated land. Lead in the air contributes to lead levels in food thr and rain containing the metal, on crops and the soil. For the majority of people in the UK, however, well below the provisional tolerable weekly intake recommended by the UN Food and Agriculture Or Health Organisation.

In what form is emitted lead?

Lead in the environment arises from both natural and anthropogenic sources. Exposure can occur th food, air, soil and dust from old paint containing lead. In the general non-smoking, adult population pathway is from food and water. Food, air, water and dust/soil are the major potential exposure pat young children. For infants up to 4 or 5 months of age, air, milk formulae and water are the significa

Lead is among the most recycled non-ferrous metals and its secondary production has therefore grc declining lead prices. Its physical and chemical properties are applied in the manufacturing, constru industries. It is easily shaped and is malleable and ductile. There are eight broad categories of use: (no longer allowed in the EU), rolled and extruded products, alloys, pigments and compounds, cable ammunition.

Effects of Mercury on the environment

Mercury is a toxic substance which has no known function in human biochemistry or physiology and in living organisms. Inorganic mercury poisoning is associated with tremors, gingivitis and/or minor together with spontaneous abortion and congenital malformation.

Monomethylmercury causes damage to the brain and the central nervous system, while foetal and p given rise to abortion, congenital malformation and development changes in young children.

In what form is emitted Mercury?

Mercury is a global pollutant with complex and unusual chemical and physical properties. The major is the degassing of the Earth's crust, emissions from volcanoes and evaporation from natural bodies

World-wide mining of the metal leads to indirect discharges into the atmosphere. The usage of merc industrial processes and in various products (e.g. batteries, lamps and thermometers). It is also wic amalgam for fillings and by the pharmaceutical industry. Concern over mercury in the environment toxic forms in which mercury can occur.

Mercury is mostly present in the atmosphere in a relatively unreactive form as a gaseous element. T lifetime (of the order of 1 year) of its gaseous form means the emission, transport and deposition of

Natural biological processes can cause methylated forms of mercury to form which bioaccumulate o concentrate in living organisms, especially fish. These forms of mercury: monomethylmercury and c toxic, causing neurotoxicological disorders. The main pathway for mercury to humans is through the inhalation.

The main sources of mercury emissions in the UK are from the manufacture of chlorine in mercury c production, coal combustion and crematoria. UK emissions of mercury are uncertain and it is estima 13 to 36 tonnes per year (DERA). Emissions are estimated to have declined by around ¾'s between due to improved controls on mercury cells and their replacement, and the fall in coal use.

Whilst there has been a decline in the level of European emissions of mercury, emissions from outsi to increase – increasing the level of ambient concentrations in the continent.

Handheld XRF No Isotopes
Metals in Soil, Paint, Wipes, etc. No Radioactive Materials!
www.Innov-Xsys.com

Heavy Metal Chelation
Edta treatment with self-diagnosis Safe, afforda
www.detoxamin.com

Ads by Goooooogle

effects of Nickel on the environment

Small amounts of Nickel are needed by the human body to produce red blood cells, however, in exc become mildly toxic. Short-term overexposure to nickel is not known to cause any health problems, can cause decreased body weight, heart and liver damage, and skin irritation. The EPA does not cur levels in drinking water. Nickel can accumulate in aquatic life, but its presence is not magnified alon

Effects of Selenium on the environment

Selenium is needed by humans and other animals in small amounts, but in larger amounts can caus system, fatigue, and irritability. Selenium accumulates in living tissue, causing high selenium conter organisms, and causing greater health problems in human over a lifetime of overexposure. These h and fingernail loss, damage to kidney and liver tissue, damage to circulatory tissue, and more sever system.

Heavy Metals adsorption process:

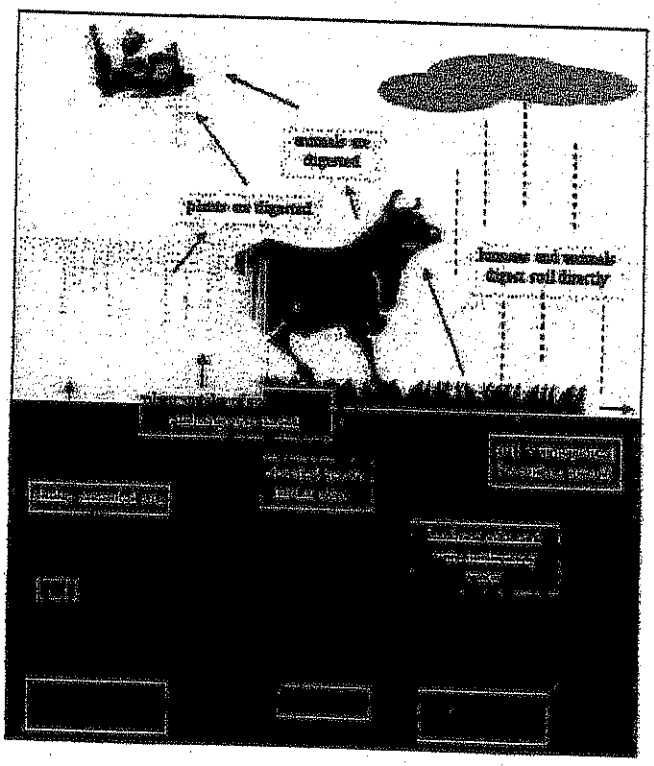

In the picture we can observe the way that follows the havy metals from the first step of the polluti human body by menas the food.

The most importants disasters with heavy metals:

1932

Minamata
Sewage containing mercury is released by Chisso's chemicals works into Minimata Bay in Japan. The mercury accumulates in sea creatures, leading eventually to mercury poisoning in the population.
1952
Minamata Syndrome
In 1952, the first incidents of mercury poisoning appear in the population of Minimata Bay in Japan, caused by consumption of fish polluted with mercury, bringing over 500 fatalities. Since then, Japan has had the strictest environmental laws in the industrialised world.
1986-11-01
Sandoz
Water used to extinguish a major fire carries c. 30 t fungicide containing mercury into the Upper Rhine. Fish are killed over a stretch of 100 km. The shock drives many FEA projects forwards. See also "Pollution of the Rhine at Basel / Sandoz".
1998-04
Spanish nature reserve contaminated after environmental disaster
Toxic chemicals in water from a burst dam belonging to a mine contaminate the Coto de Donana nature reserve in southern Spain. C. 5 million m_ of mud containing sulphur, lead, copper, zinc and cadmium flow down the Rio Guadimar. Experts estimate that Europe's largest bird sanctuary, as well as Spain's agriculture and fisheries, will suffer permanent damage from the pollution.

Suggested reading for Heavy Metals

Heavy Metal Analysis Test
Hair Analysis Reveals Toxic Metals Full Equipped Med. Lab Order Today
www.gracefulearth.com

ID Heavy Metals In Soil
Real-time, In-Situ Characterization No sampling, no waiting for results
www.austinai.com

Analytical Testing L
RTI Laboratories, Livoni & Metallurgical Testing
www.rtilab.com

Ads by Goooooogle

[Home] [Back] [More Info][Electrolysis][Metallyse]

Copyright © 1998-2006 Lenntech Water treatment & air purification Holding B.V.
Rotterdamseweg 402 M
2629 HH Delft, The Netherlands
tel: (+31)(0)15 26.10.900
fax: (+31)(0)15 26.16.289
e-mail: info@lenntech.com

MSDS Number: A7441 * * * * * *Effective Date: 11/12/03* * * * * *Supercedes: 02/23/01*

MSDS Material Safety Data Sheet

24 Hour Emergency Telephone: 908-859-2151
CHEMTREC: 1-800-424-9300
National Response in Canada
CANUTEC: 613-996-6666
Outside U.S. And Canada
Chemtrec: 703-527-3887

NOTE: CHEMTREC, CANUTEC and National Response Center emergency numbers to be used only in the event of chemical emergencies involving a spill, leak, fire, exposure or accident involving chemicals.

From: Mallinckrodt Baker, Inc.
222 Red School Lane
Phillipsburg, NJ 08865

All non-emergency questions should be directed to Customer Service (1-800-582-2537) for assistance.

ARSENIC, 1,000 UG/ML OR 10,000 UG/ML

1. Product Identification

Synonyms: None
CAS No.: Not applicable to mixtures.
Molecular Weight: Not applicable to mixtures.
Chemical Formula: Not applicable to mixtures.
Product Codes: 5704, 5718, 6442

2. Composition/Information on Ingredients

Ingredient	CAS No	Percent	Hazardous
Arsenic	7440-38-2	0.1 - 1%	Yes
Nitric Acid	7697-37-2	< 4%	Yes
Water	7732-18-5	> 95%	No

3. Hazards Identification

Emergency Overview

DANGER! CORROSIVE. LIQUID AND MIST CAUSE SEVERE BURNS TO ALL BODY TISSUE. MAY BE FATAL IF SWALLOWED OR INHALED. AFFECTS LIVER, KIDNEYS, LUNGS AND TEETH. CANCER HAZARD. CONTAINS INORGANIC ARSENIC WHICH CAN CAUSE CANCER. Risk of cancer depends on duration and level of exposure.

J.T. Baker SAF-T-DATA(tm) Ratings (Provided here for your convenience)

Health Rating: 4 - Extreme (Cancer Causing)
Flammability Rating: 0 - None
Reactivity Rating: 1 - Slight
Contact Rating: 3 - Severe (Corrosive)
Lab Protective Equip: GOGGLES & SHIELD; LAB COAT & APRON; VENT HOOD; PROPER GLOVES
Storage Color Code: White (Corrosive)

Potential Health Effects

Nitric acid is extremely hazardous; it is corrosive, reactive, an oxidizer, and a poison. The health effects from exposure to diluted forms of this chemical are not well documented. They are expected to be less severe than those for concentrated forms which are referenced in the descriptions below.

Inhalation:
Corrosive! Inhalation of vapors can cause breathing difficulties and lead to pneumonia and pulmonary edema, which may be fatal. Other symptoms may include coughing, choking, and irritation of the nose, throat, and respiratory tract. Arsenic may cause inflammation of the mucous membranes with cough and foamy sputum, restlessness, dyspnea, cyanosis, and rales. Symptoms like those from ingestion exposure may follow. May cause pulmonary edema.
Ingestion:
Corrosive! Swallowing nitric acid can cause immediate pain and burns of the mouth, throat, esophagus and gastrointestinal tract. Arsenic is highly toxic! May cause burning in esophagus, vomiting, and bloody diarrhea. Symptoms of cold and clammy skin, low blood pressure, weakness, headache, cramps, convulsions, and coma may follow. May cause damage to liver and kidneys. A suspected fetal toxin. Death may occur from circulatory failure. Estimated lethal dose 120 milligrams.
Skin Contact:
Corrosive! Can cause redness, pain, and severe skin burns. Concentrated solutions cause deep ulcers and stain skin a yellow or yellow-brown color.
Eye Contact:
Corrosive! Vapors are irritating and may cause damage to the eyes. Contact may cause severe burns and permanent eye damage.
Chronic Exposure:
Long-term exposure to concentrated vapors may cause erosion of teeth and lung damage. Long-term exposures seldom occur due to the corrosive properties of the acid. Arsenic on repeated or prolonged skin contact may cause bronzing of the skin, edema, dermatitis, and lesions. Repeated or prolonged inhalation of dust may cause damage to the nasal septum. Chronic exposure from inhalation or ingestion may cause hair and weight loss, a garlic odor

to the breath and perspiration, excessive salivation and perspiration, central nervous system damage, hepatitis, gastrointestinal disturbances, cardiovascular damage, and kidney and liver damage. Arsenic compounds are known human carcinogens and may be teratogenic based on effects in laboratory animals.

Aggravation of Pre-existing Conditions:

Persons with pre-existing skin disorders, eye disease, or cardiopulmonary diseases may be more susceptible to the effects of this substance.

---

4. First Aid Measures

Immediate first aid treatment reduces the health effects of this substance. First aid procedures given apply to concentrated solutions. Exposures to dilute solutions may not require these extensive first aid procedures.

Inhalation:

Remove to fresh air. If not breathing, give artificial respiration. If breathing is difficult, give oxygen. Get medical attention.

Ingestion:

If swallowed, give large quantities of water to drink and get medical attention immediately. Never give anything by mouth to an unconscious person.

Skin Contact:

In case of contact, immediately flush skin with plenty of water for at least 15 minutes while removing contaminated clothing and shoes. Wash clothing before reuse. Thoroughly clean shoes before reuse. Get medical attention immediately. Contaminated work clothes should be laundered by individuals who have been informed of the hazards of exposure to this substance.

Eye Contact:

Immediately flush eyes with plenty of water for at least 15 minutes, lifting lower and upper eyelids occasionally. Get medical attention immediately.

Note to Physician:

If emesis if unsuccessful after two doses of Ipecac, consider gastric lavage. Monitor urine arsenic level. Alkalization of urine may help prevent disposition of red cell breakdown products in renal tubular cells. If acute exposure is significant, maintain high urine output and monitor volume status, preferably with central venous pressure line. Abdominal X-rays should be done routinely for all ingestions. Chelation therapy with BAL, followed by n-penicillamine is recommended, but specific dosing guidelines are not clearly established.

---

5. Fire Fighting Measures

Fire:

Not combustible, but concentrated material is a strong oxidizer and its heat of reaction with reducing agents or combustibles may cause ignition.

Explosion:

Concentrated material reacts explosively with combustible organic or readily oxidizable materials such as: alcohols, turpentine, charcoal, organic refuse, metal powder, hydrogen sulfide, etc. Reacts with most metals to release hydrogen gas which can form explosive

mixtures with air.
Fire Extinguishing Media:
If involved in a fire, use water spray.
Special Information:
Increases the flammability of combustible, organic and readily oxidizable materials. In the event of a fire, wear full protective clothing and NIOSH-approved self-contained breathing apparatus with full facepiece operated in the pressure demand or other positive pressure mode.

---

6. Accidental Release Measures

Ventilate area of leak or spill. Wear appropriate personal protective equipment as specified in Section 8. Isolate hazard area. Keep unnecessary and unprotected personnel from entering. Contain and recover liquid when possible. Neutralize with alkaline material (soda ash, lime), then absorb with an inert material (e. g., vermiculite, dry sand, earth), and place in a chemical waste container. Do not use combustible materials, such as saw dust. Do not flush to sewer! US Regulations (CERCLA) require reporting spills and releases to soil, water and air in excess of reportable quantities. The toll free number for the US Coast Guard National Response Center is (800) 424-8802.

J. T. Baker NEUTRASORB® or TEAM® 'Low Na+' acid neutralizers are recommended for spills of this product.

---

7. Handling and Storage

Store in a cool, dry, ventilated storage area with acid resistant floors and good drainage. Protect from physical damage. Keep out of direct sunlight and away from heat, water, and incompatible materials. Do not wash out container and use it for other purposes. When diluting, the acid should always be added slowly to water and in small amounts. Never use hot water and never add water to the acid. Water added to acid can cause uncontrolled boiling and splashing. Wear special protective equipment (Sec. 8) for maintenance break-in or where exposures may exceed established exposure levels. Wash hands, face, forearms and neck when exiting restricted areas. Shower, dispose of outer clothing, change to clean garments at the end of the day. Avoid cross-contamination of street clothes. Wash hands before eating and do not eat, drink, or smoke in workplace. Containers of this material may be hazardous when empty since they retain product residues (vapors, liquid); observe all warnings and precautions listed for the product.

---

8. Exposure Controls/Personal Protection

Airborne Exposure Limits:
For Nitric Acid:

OSHA Permissible Exposure Limit (PEL):
2 ppm (TWA)
ACGIH Threshold Limit Value (TLV):
2 ppm (TWA); 4 ppm (STEL)
For Inorganic Arsenic compounds (as As):
- OSHA Permissible Exposure Limit (PEL):
10 ug/m3 (TWA), 5 ug/m3(Action Level), cancer hazard.
- ACGIH Threshold Limit Value (TLV):
0.01 mg/m3 (TWA), A1, confirmed human carcinogen.

Ventilation System:
A system of local and/or general exhaust is recommended to keep employee exposures below the Airborne Exposure Limits. Local exhaust ventilation is generally preferred because it can control the emissions of the contaminant at its source, preventing dispersion of it into the general work area. Please refer to the ACGIH document, *Industrial Ventilation, A Manual of Recommended Practices*, most recent edition, for details.

Personal Respirators (NIOSH Approved):
If the exposure limit is exceeded, wear a supplied air, full-facepiece respirator, airlined hood, or full-facepiece self-contained breathing apparatus. Canister-type respirators using sorbents are ineffective.

Skin Protection:
Rubber or neoprene gloves and additional protection including impervious boots, apron, or coveralls, as needed in areas of unusual exposure to prevent skin contact.

Eye Protection:
Use chemical safety goggles and/or a full face shield where splashing is possible. Maintain eye wash fountain and quick-drench facilities in work area.

Other Control Measures:
Any area where inorganic arsenic is stored, handled, used, etc., must be established as a 'Regulated Area' with controlled access, limited to authorized persons. Containers of inorganic arsenic and Regulated Areas must be labeled to show a CANCER SUSPECT AGENT is present. Eating, drinking, and smoking should not be permitted in areas where solids or liquids containing arsenic or lead compounds are handled, processed, or stored. See OSHA substance-specific standard for more information on personal protective equipment, engineering and work practice controls, medical surveillance, record keeping, and reporting requirements. (arsenic: 29 CFR 1910 .1018; lead: 29 CFR 1910.1025).

---

9. Physical and Chemical Properties

Appearance:
Clear, colorless liquid.

Odor:
Odorless.

Solubility:
Infinitely soluble.

Specific Gravity:
No information found.

pH:
No information found.

% Volatiles by volume @ 21C (70F):

> 99
Boiling Point:
No information found.
Melting Point:
No information found.
Vapor Density (Air=1):
No information found.
Vapor Pressure (mm Hg):
No information found.
Evaporation Rate (BuAc=1):
No information found.

---

10. Stability and Reactivity

Stability:
Stable under ordinary conditions of use and storage. Containers may burst when heated.
Hazardous Decomposition Products:
When heated to decomposition, emits toxic nitrogen oxides fumes and hydrogen nitrate. Emits toxic fumes of arsenic when heated to decomposition.
Hazardous Polymerization:
Will not occur.
Incompatibilities:
A dangerously powerful oxidizing agent, concentrated nitric acid is incompatible with most substances, especially strong bases, metallic powders, carbides, hydrogen sulfide, turpentine, and combustible organics.
Conditions to Avoid:
Heat, incompatibles.

---

11. Toxicological Information

Toxicological Data:
For arsenic: oral rat LD50: 763 mg/kg. Investigated as a tumorigen, mutagen, reproductive effector. For Nitric Acid: Investigated as a mutagen and reproductive effector.
Carcinogenicity:
For arsenic and inorganic arsenic compounds:
Regulated by OSHA as a carcinogen.
EPA / IRIS classification: Group A - Known human carcinogen.

--------\Cancer Lists\----------

Ingredient	---NTP Carcinogen--- Known	Anticipated	IARC Category
Arsenic (7440-38-2)	Yes	No	1
Nitric Acid (7697-37-2)	No	No	None
Water (7732-18-5)	No	No	None

12. Ecological Information

Environmental Fate:
No information found.
Environmental Toxicity:
No information found.

---

13. Disposal Considerations

Whatever cannot be saved for recovery or recycling should be handled as hazardous waste and sent to a RCRA approved waste facility. Processing, use or contamination of this product may change the waste management options. State and local disposal regulations may differ from federal disposal regulations. Dispose of container and unused contents in accordance with federal, state and local requirements.

---

14. Transport Information

Domestic (Land, D.O.T.)

Proper Shipping Name: CORROSIVE LIQUID, ACIDIC, INORGANIC, N.O.S. (NITRIC ACID)
Hazard Class: 8
UN/NA: UN3264
Packing Group: III
Information reported for product/size: 500ML

International (Water, I.M.O.)

Proper Shipping Name: CORROSIVE LIQUID, ACIDIC, INORGANIC, N.O.S. (NITRIC ACID)
Hazard Class: 8
UN/NA: UN3264
Packing Group: III
Information reported for product/size: 500ML

International (Air, I.C.A.O.)

Proper Shipping Name: CORROSIVE LIQUID, ACIDIC, INORGANIC, N.O.S. (NITRIC ACID)
Hazard Class: 8
UN/NA: UN3264
Packing Group: III
Information reported for product/size: 500ML

---

15. Regulatory Information

--------\Chemical Inventory Status - Part 1\--------

Ingredient	TSCA	EC	Japan	Australia
Arsenic (7440-38-2)	Yes	Yes	No	Yes
Nitric Acid (7697-37-2)	Yes	Yes	Yes	Yes
Water (7732-18-5)	Yes	Yes	Yes	Yes

--------\Chemical Inventory Status - Part 2\--------

Ingredient	Korea	--Canada-- DSL	NDSL	Phil.
Arsenic (7440-38-2)	Yes	Yes	No	Yes
Nitric Acid (7697-37-2)	Yes	Yes	No	Yes
Water (7732-18-5)	Yes	Yes	No	Yes

--------\Federal, State & International Regulations - Part 1\--------

Ingredient	-SARA 302- RQ	TPQ	------SARA 313------ List	Chemical Catg.
Arsenic (7440-38-2)	No	No	Yes	Arsenic comp
Nitric Acid (7697-37-2)	1000	1000	Yes	No
Water (7732-18-5)	No	No	No	No

--------\Federal, State & International Regulations - Part 2\--------

Ingredient	CERCLA	-RCRA- 261.33	-TSCA- 8(d)
Arsenic (7440-38-2)	1	No	No
Nitric Acid (7697-37-2)	1000	No	No
Water (7732-18-5)	No	No	No

Chemical Weapons Convention: No TSCA 12(b): No CDTA: No
SARA 311/312: Acute: Yes Chronic: Yes Fire: No Pressure: No
Reactivity: No (Mixture / Liquid)

WARNING:
THIS PRODUCT CONTAINS A CHEMICAL(S) KNOWN TO THE STATE OF CALIFORNIA TO CAUSE CANCER.

Australian Hazchem Code: None allocated.
Poison Schedule: S6
WHMIS:
This MSDS has been prepared according to the hazard criteria of the Controlled Products Regulations (CPR) and the MSDS contains all of the information required by the CPR.

16. Other Information

NFPA Ratings: Health: 3 Flammability: 0 Reactivity: 0
Label Hazard Warning:
DANGER! CORROSIVE. LIQUID AND MIST CAUSE SEVERE BURNS TO ALL

BODY TISSUE. MAY BE FATAL IF SWALLOWED OR INHALED. AFFECTS LIVER, KIDNEYS, LUNGS AND TEETH. CANCER HAZARD. CONTAINS INORGANIC ARSENIC WHICH CAN CAUSE CANCER. Risk of cancer depends on duration and level of exposure.

Label Precautions:

Do not get in eyes, on skin, or on clothing.
Do not breathe vapor or mist.
Use only with adequate ventilation.
Wash thoroughly after handling.
Keep container closed.

Label First Aid:

In case of contact, immediately flush eyes or skin with plenty of water for at least 15 minutes while removing contaminated clothing and shoes. Wash clothing before reuse. If swallowed, give large amounts of water to drink. Never give anything by mouth to an unconscious person. If inhaled, remove to fresh air. If not breathing, give artificial respiration. If breathing is difficult, give oxygen. In all cases get medical attention immediately.

Product Use:

Laboratory Reagent.

Revision Information:

No Changes.

Disclaimer:

****

Mallinckrodt Baker, Inc. provides the information contained herein in good faith but makes no representation as to its comprehensiveness or accuracy. This document is intended only as a guide to the appropriate precautionary handling of the material by a properly trained person using this product. Individuals receiving the information must exercise their independent judgment in determining its appropriateness for a particular purpose. MALLINCKRODT BAKER, INC. MAKES NO REPRESENTATIONS OR WARRANTIES, EITHER EXPRESS OR IMPLIED, INCLUDING WITHOUT LIMITATION ANY WARRANTIES OF MERCHANTABILITY, FITNESS FOR A PARTICULAR PURPOSE WITH RESPECT TO THE INFORMATION SET FORTH HEREIN OR THE PRODUCT TO WHICH THE INFORMATION REFERS. ACCORDINGLY, MALLINCKRODT BAKER, INC. WILL NOT BE RESPONSIBLE FOR DAMAGES RESULTING FROM USE OF OR RELIANCE UPON THIS INFORMATION.

****

Prepared by: Environmental Health & Safety
Phone Number: (314) 654-1600 (U.S.A.)

ATSDR

AGENCY FOR TOXIC SUBSTANCES AND DISEASE REGISTRY

MERCURY

CAS # 7439-97-6

Agency for Toxic Substances and Disease Registry ToxFAQs

April 1999

This fact sheet answers the most frequently asked health questions (FAQs) about mercury. For more information, call the ATSDR Information Center at 1-888-422-8737. This fact sheet is one in a series of summaries about hazardous substances and their health effects. It's important you understand this information because this substance may harm you. The effects of exposure to any hazardous substance depend on the dose, the duration, how you are exposed, personal traits and habits, and whether other chemicals are present.

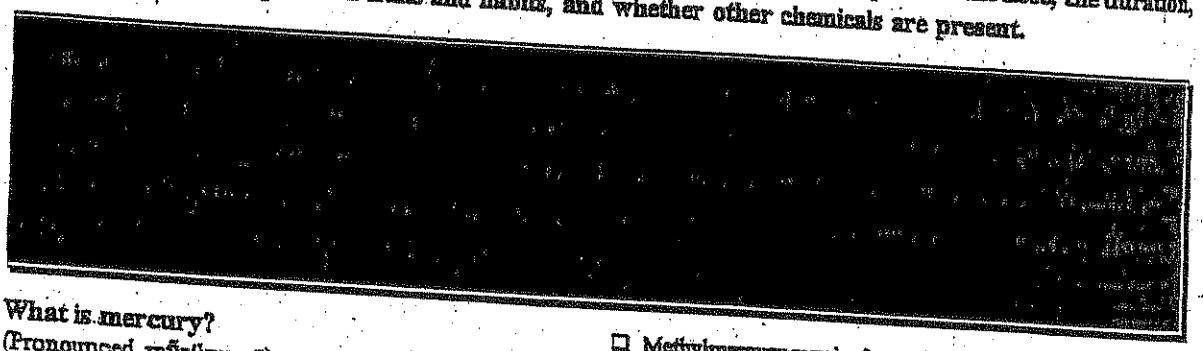

What is mercury?

(Pronounced mŭr'kyə-rē)

Mercury is a naturally occurring metal which has several forms. The metallic mercury is a shiny, silver-white, odorless liquid. If heated, it is a colorless, odorless gas.

Mercury combines with other elements, such as chlorine, sulfur, or oxygen, to form inorganic mercury compounds or "salts," which are usually white powders or crystals. Mercury also combines with carbon to make organic mercury compounds. The most common one, methylmercury, is produced mainly by microscopic organisms in the water and soil. More mercury in the environment can increase the amounts of methylmercury that these small organisms make.

Metallic mercury is used to produce chlorine gas and caustic soda, and is also used in thermometers, dental fillings, and batteries. Mercury salts are sometimes used in skin lightening creams and as antiseptic creams and ointments.

What happens to mercury when it enters the environment?

- ☐ Inorganic mercury (metallic mercury and inorganic mercury compounds) enters the air from mining ore deposits, burning coal and waste, and from manufacturing plants.
- ☐ It enters the water or soil from natural deposits, disposal of wastes, and volcanic activity.
- ☐ Methylmercury may be formed in water and soil by small organisms called bacteria.
- ☐ Methylmercury builds up in the tissues of fish. Larger and older fish tend to have the highest levels of mercury.

How might I be exposed to mercury?

- ☐ Eating fish or shellfish contaminated with methylmercury.
- ☐ Breathing vapors in air from spills, incinerators, and industries that burn mercury-containing fuels.
- ☐ Release of mercury from dental work and medical treatments.
- ☐ Breathing contaminated workplace air or skin contact during use in the workplace (dental, health services, chemical, and other industries that use mercury).
- ☐ Practicing rituals that include mercury.

How can mercury affect my health?

The nervous system is very sensitive to all forms of mercury. Methylmercury and metallic mercury vapors are more harmful than other forms, because more mercury in these forms reaches the brain. Exposure to high levels of metallic, inorganic, or organic mercury can permanently damage the brain, kidneys, and developing fetus. Effects on brain functioning may result in irritability, shyness, tremors, changes in vision or hearing, and memory problems.

Short-term exposure to high levels of metallic mercury vapors may cause effects including lung damage, nausea,

ATSDR

AGENCY FOR TOXIC SUBSTANCES AND DISEASE REGISTRY

LEAD

CAS # 7439-92-1

Agency for Toxic Substances and Disease Registry ToxFAQs

June 1999

This fact sheet answers the most frequently asked health questions (FAQs) about lead. For more information, call the ATSDR Information Center at 1-888-422-8737. This fact sheet is one in a series of summaries about hazardous substances and their health effects. It's important you understand this information because this substance may harm you. The effects of exposure to any hazardous substance depend on the dose, the duration, how you are exposed, personal traits and habits, and whether other chemicals are present.

What is lead?

(Pronounced lĕd)

Lead is a naturally occurring bluish-gray metal found in small amounts in the earth's crust. Lead can be found in all parts of our environment. Much of it comes from human activities including burning fossil fuels, mining, and manufacturing.

Lead has many different uses. It is used in the production of batteries, ammunition, metal products (solder and pipes), and devices to shield X-rays.

Because of health concerns, lead from gasoline, paints and ceramic products, caulking, and pipe solder has been dramatically reduced in recent years.

What happens to lead when it enters the environment?

- Lead itself does not break down, but lead compounds are changed by sunlight, air, and water.
- When lead is released to the air, it may travel long distances before settling to the ground.
- Once lead falls onto soil, it usually sticks to soil particles.
- Movement of lead from soil into groundwater will depend on the type of lead compound and the characteristics of the soil.
- Much of the lead in inner-city soils comes from old houses painted with lead-based paint.

How might I be exposed to lead?

- Eating food or drinking water that contains lead.
- Spending time in areas where lead-based paints have been used and are deteriorating.
- Working in a job where lead is used.
- Using health-care products or folk remedies that contain lead.
- Engaging in certain hobbies in which lead is used (for example, stained glass).

How can lead affect my health?

Lead can affect almost every organ and system in your body. The most sensitive is the central nervous system, particularly in children. Lead also damages kidneys and the reproductive system. The effects are the same whether it is breathed or swallowed.

At high levels, lead may decrease reaction time, cause weakness in fingers, wrists, or ankles, and possibly affect the memory. Lead may cause anemia, a disorder of the blood. It can also damage the male reproductive system. The connection between these effects and exposure to low levels of lead is uncertain.

How likely is lead to cause cancer?

The Department of Health and Human Services has determined that lead acetate and lead phosphate may reasonably

Safety (MSDS) data for beryllium

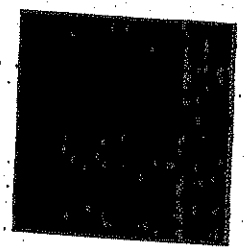

General

Synonyms: glucinium
Molecular formula: Be
CAS No: 7440-41-7
EINECS No: 231-150-7
EU No: 004-001-00-7

Physical data

Appearance: silvery solid or grey foil
Melting point: 1278 C
Boiling point: 2970 C
Vapour density:
Vapour pressure:
Density (g cm^{-3}): 1.85
Flash point:
Explosion limits:
Autoignition temperature:
Water solubility: insoluble

Stability

Stable. Incompatible with acids, bases, oxidizing agents, halogen

pH:
No information found.
% Volatiles by volume @ 21C (70F):
0
Boiling Point:
340C (644F)
Melting Point:
217C (423F)
Vapor Density (Air=1):
6.15
Vapor Pressure (mm Hg):
1 @ 145C (293F) (sublimes)
Evaporation Rate (BuAc=1):
No information found.

10. Stability and Reactivity

Stability:
Stable under ordinary conditions of use and storage. Darkens on exposure to light.
Hazardous Decomposition Products:
Carbon dioxide and carbon monoxide may form when heated to decomposition.
Hazardous Polymerization:
Will not occur.
Incompatibilities:
Fluorine, chromic acid, oxidizing agents.
Conditions to Avoid:
No information found.

11. Toxicological Information

Oral mouse LD: > 17,000 mg/kg. Irritation skin, Draize mouse: 118 ug mild. Investigated as a tumorigen and mutagen. IARC 3.

---------\Cancer Lists\---------

Ingredient	---NTP Carcinogen--- Known	Anticipated	IARC Categ
Anthracene (120-12-7)	No	No	3

12. Ecological Information

Anthracene (120-12-7)

	No	No	Yes	No

---------\Federal, State & International Regulations - Part 2\---------

Ingredient	CERCLA	-RCRA- 261.33	-TSCA- 8(d)
Anthracene (120-12-7)	5000	No	No

Chemical Weapons Convention: No TSCA 12(b): No CDTA: No
SARA 311/312: Acute: Yes Chronic: Yes Fire: No Pressure: No
Reactivity: No (Pure / Solid)

Australian Hazchem Code: None allocated.
Poison Schedule: None allocated.
WHMIS:
This MSDS has been prepared according to the hazard criteria of the Controlled Products Regulations (CPR) and the MSDS contains all of the information required by the CPR.

---

16. Other Information

NFPA Ratings: Health: 1 Flammability: 1 Reactivity: 0
Label Hazard Warning:
WARNING! MAY CAUSE IRRITATION TO SKIN, EYES, AND RESPIRATORY TRACT. MAY CAUSE ALLERGIC SKIN REACTION.
Label Precautions:
Keep container closed.
Use with adequate ventilation.
Avoid breathing dust.
Wash thoroughly after handling.
Avoid contact with eyes, skin and clothing.
Label First Aid:
If inhaled, remove to fresh air. If not breathing, give artificial respiration. If breathing is difficult, give oxygen. Call a physician. In case of contact, immediately flush skin or eyes with plenty of water for at least 15 minutes. Call a physician if irritation develops or persists.
Product Use:
Laboratory Reagent.
Revision Information:
No Changes.
Disclaimer:
****

Safety (MSDS) data for zinc

Click here for data on zinc in student-friendly format, from the HSci project

General

Synonyms: zinc dust, zinc powder, blue powder, granular zinc, zinc foil, LS 2, LS 6, merrillite, zinc metal
Molecular formula: Zn
CAS No: 7440-66-6
EINECS No: 231-175-3
EC number: 030-001-00-1

Physical data

Appearance: silver or blueish-white foil or powder
Melting point: 420 C
Boiling point: 908 C
Vapour density:
Vapour pressure:
Density (g cm^{-3}): 7.14
Flash point:
Explosion limits:
Autoignition temperature:
Water solubility:

Stability

Stable. Incompatible with amines, cadmium, sulfur, chlorinated solvents, strong acids, strong bases. Air and moisture sensitive. **Powder or dust is very flammable.**

Abbreviations used in Toxicity data

The table below gives the main abbreviations which will be found in the toxicity data for chemicals listed on these (and many other) web pages.

asn	Aspergillus nidulans
ast	Ascites tumor
bcs	Bacillus subtilis
bfa	body fluid assay
bmr	bone marrow
brd	bird (domestic or lab)
bwd	wild bird species
chd	child
ckn	chicken
CL	ceiling concentration
clr	Chlamydomonas reinhardi
ctl	cattle
cyt	cytogenetic analysis
D	day
dck	duck
dlt	cominant lethal test
dmg	Drosophila melanogaster
dnd	DNA damage
dni	DNA inhibition
dnr	nNA repair
dns	unscheduled DNA synthesis
dom	domestic animal (goat, sheep)
dpo	Drcsophila pseudo-obscura
emb	embryo
esc	Escherichia cold
eug	Euglena gracilis

itt	intratesticular
iu	international unit
iut	intrauterine
ivg	intravaginal
ivn	intravenous
kdy	kidney
kg	kilogram
klp	Klebsiella pneumoniae
L	liter
LC50	lethal concentration 50 percent kill
LCLo	lowest published lethal concentration
LD50	lethal dose 50 percent kill
LDlo	lowest published lethal dose
leu	leukocyte
Liq	liquid
lng	lung
lvr	liver
lym	lymphocyte
M	minute
m3	cubic meter
mam	mammal (species unspecified)
man	man
ug	microgram
umol	micromole
mg	milligram
mky	monkey
mL	milliliter
MLD	mild irritation effects
mma	microsomal mutagenicity assay
mmo	mutation in microorganisms
mmol	millimole
mmr	mammary gland
mnt	micronucleus test
MOD	moderate irritation effects

ppt	parts per trillion (v/v)
preg	pregnant
qal	quail
rat	rat
rbt	rabbit
rec	rectal
rns	rinsed with water
S	second
sal	salmon
sat	Salmonella typhimurium
sce	sister chromatic exchange
scu	subcutaneous
SEV	severe irritation effects
skn	administration onto skin
sln	sex chromosome loss and nondisjunction
slt	specific locus test
slw	silkworm
smc	Saccharomyces cerevisiae
spm	sperm morphology
spr	sperm
sql	squirrel
srm	Serratia marcescens
ssp	Schizosaccharomyces pombe
STEL	short term exposure limit
TC	toxic concentration (other than lowest concentration)
TCLo	lowest published toxic concentration
TD	toxic dose (other than lowest toxic dose)
TDLo	lowest published toxic dose
tes	testis
TLV	Threshold Limit Value
tod	toad
trk	turkey
trn	heritable translocation test
TWA	time weighted average

Risk Phrases

Chemical data sheets available in many countries now contain codes for certain "risk phrases", shown as R23, R45 etc. These risk phrase codes have the following meanings:

- R1 Explosive when dry.
- R2 Risk of explosion by shock, friction, fire or other source of ignition.
- R3 Extreme risk of explosion by shock, friction, fire or other sources of ignition.
- R4 Forms very sensitive explosive metallic compounds.
- R5 Heating may cause an explosion.
- R6 Explosive with or without contact with air.
- R7 May cause fire.
- R8 Contact with combustible material may cause fire.
- R9 Explosive when mixed with combustible material.
- R10 Flammable.
- R11 Highly flammable.
- R12 Extremely flammable.
- R13 Extremely flammable liquefied gas
- R14 Reacts violently with water.
- R15 Contact with water liberates extremely flammable gases.
- R16 Explosive when mixed with oxidizing substances.
- R17 Spontaneously flammable in air.
- R18 In use, may form inflammable/explosive vapour-air mixture.
- R19 May form explosive peroxides.
- R20 Harmful by inhalation.
- R21 Harmful in contact with skin.
- R22 Harmful if swallowed.
- R23 Toxic by inhalation.
- R24 Toxic in contact with skin.
- R25 Toxic if swallowed.

- R61 May cause harm to the unborn child.
- R62 Risk of impaired fertility.
- R63 Possible risk of harm to the unborn child.
- R64 May cause harm to breastfed babies.
- R65 Harmful: may cause lung damage if swallowed.
- R66 Repeated exposure may cause skin dryness or cracking.
- R67 Vapours may cause drowsiness and dizziness.
- R68 Possible risk of irreversible effects.

It is current safety policy at Oxford University that a written COSHH assessment **must** be provided when a substance to be used has been assigned any of the risk phrases R42, R43, R45, R46, R48, R49, R60 or R61. Other hazards may also dictate the preparation of a suitable COSHH assessment.

[Return to Physical & Theoretical Chemistry Lab. Safety home page.]

This information was last updated on October 28, 2003. We have tried to make it as accurate and useful as possible, but can take no responsibility for its use, misuse, or accuracy. We have not verified this information, and cannot guarantee that it is up-to-date.

- Class 8 Corrosive substances
- Class 9 Miscellaneous dangerous substances

See also Packing Group.
For further details on the transport of dangerous goods, see the OECD Directorate web site.

Return to the Safety Glossary.
Return to the Safety home page of the Physical and Theoretical Chemistry Laboratory, Oxford University.

- S26 In case of contact with eyes, rinse immediately with plenty of water and seek medical advice.
- S27 Take off immediately all contaminated clothing.
- S28 After contact with skin, wash immediately with plenty of soap-suds.
- S29 Do not empty into drains.
- S30 Never add water to this product.
- S33 Take precautionary measures against static discharges.
- S35 This material and its container must be disposed of in a safe way.
- S36 Wear suitable protective clothing.
- S37 Wear suitable gloves.
- S38 In case of insufficient ventilation, wear suitable respiratory equipment.
- S39 Wear eye / face protection.
- S40 To clean the floor and all objects contaminated by this material, use .... (there follows suitable cleaning material).
- S41 In case of fire and / or explosion do not breathe fumes.
- S42 During fumigation / spraying wear suitable respiratory equipment.
- S43 In case of fire use ... (there follows the type of fire-fighting equipment to be used.)
- S45 In case of accident or if you feel unwell, seek medical advice immediately (show the label whenever possible.)
- S46 If swallowed, seek medical advice immediately and show this container or label.
- S47 Keep at temperature not exceeding...
- S48 To be kept wet with (there follows a material name).
- S49 Keep only in the original container.
- S50 Do not mix with ...
- S51 Use only in well ventilated areas.
- S52 Not recommended for interior use on large surface areas

MSDS Material Safety Data Sheet

From: Mallinckrodt Baker, Inc.
222 Red School Lane
Phillipsburg, NJ 08865

Mallinckrodt CHEMICALS

J.T.Baker

24-Hour Emergency Telephone: [illegible]
CHEMTREC: [illegible]

National Response in Canada
CANUTEC: [illegible]

Outside U.S. and Canada
Chemtrec: [illegible]

NOTE: CHEMTREC, CANUTEC and National Response Center emergency numbers are to be used only in the event of chemical emergencies involving a spill, leak, fire, exposure or accident involving chemicals.

All non-emergency questions should be directed to Customer Service (1-800-582-2537) for assistance.

COPPER METAL

MSDS Number: C5170 — ***Effective Date: 05/17/01***

1. Product Identification

Synonyms: C.I. 77400; Arwood Copper
CAS No.: 7440-50-8
Molecular Weight: 63.546
Chemical Formula: Cu
Product Codes:
J.T. Baker: 1714, 1720, 1732, 1736
Mallinckrodt: 1733, 4649

2. Composition/Information on Ingredients

Ingredient	CAS No	Percent	Hazardous
Copper	7440-50-8	90 - 100%	Yes

3. Hazards Identification

Emergency Overview

WARNING! HARMFUL IF SWALLOWED OR INHALED. CAUSES IRRITATION TO SKIN, EYES AND RESPIRATORY TRACT. AFFECTS THE LIVER AND KIDNEYS. CHRONIC EXPOSURE MAY CAUSE TISSUE DAMAGE.

Immediately flush eyes with plenty of water for at least 15 minutes, lifting lower and upper eyelids occasionally. Get medical attention immediately.

5. Fire Fighting Measures

Fire:
Not considered to be a fire hazard since the bulk solid does not burn, but very finely divided particles (ultra-fine powder) may burn in air.
Explosion:
Not considered to be an explosion hazard. Reactions with incompatibles may pose an explosion hazard. Liquid copper explodes on contact with water. High concentrations of finely divided copper particles in the air may present an explosion hazard.
Fire Extinguishing Media:
Use any means suitable for extinguishing surrounding fire.
Special Information:
In the event of a fire, wear full protective clothing and NIOSH-approved self-contained breathing apparatus with full facepiece operated in the pressure demand or other positive pressure mode.

6. Accidental Release Measures

Ventilate area of leak or spill. Wear appropriate personal protective equipment as specified in Section 8. Spills: Sweep up and containerize for reclamation or disposal. Vacuuming or wet sweeping may be used to avoid dust dispersal. US Regulations (CERCLA) require reporting spills and releases to soil, water and air in excess of reportable quantities. The toll free number for the US Coast Guard National Response Center is (800) 424-8802.

7. Handling and Storage

Keep in a tightly closed container, stored in a cool, dry, ventilated area. Protect against physical damage. Avoid exposure to air and moisture. Isolate from incompatible substances. Containers of this material may be hazardous when empty since they retain product residues (dust, solids); observe all warnings and precautions listed for the product.

8. Exposure Controls/Personal Protection

Airborne Exposure Limits:
Copper Dust and Mists, as Cu:
- OSHA Permissible Exposure Limit (PEL) -
1 mg/m3 (TWA)
- ACGIH Threshold Limit Value (TLV) -

10. Stability and Reactivity

Stability:
Stable under ordinary conditions of use and storage. Copper becomes dull when exposed to air; on exposure to moist air it gradually converts to the carbonate. On long standing, a white, highly explosive peroxide deposit may form.
Hazardous Decomposition Products:
No information found.
Hazardous Polymerization:
Will not occur.
Incompatibilities:
Copper is incompatible with oxidizers, alkalis, acetylene, chlorine plus oxygen difluoride, phosphorus, nitric acid, potassium peroxide, 1-bromo-2-propyne, sulfur plus chlorates. Reacts violently with ammonium nitrate, bromates, iodates, chlorates, ethylene oxide, hydrozoic acid, potassium oxide, dimethyl sulfoxide plus trichloroacetic acid, hydrogen peroxide, sodium peroxide, sodium azide, sulfuric acid, hydrogen sulfide plus air, and lead azide. A potentially explosive reaction occurs with acetylenic compounds. Copper ignites on contact with chlorine, fluorine (above 121C), chlorine trifluoride, and hydrazinium nitrate (above 70C). An incandescent reaction occurs with potassium dioxide.
Conditions to Avoid:
Incompatibles and prolonged exposure to air and moisture.

11. Toxicological Information

No LD50/LC50 information found relating to normal routes of occupational exposure. Investigated as a tumorigen and a reproductive effector.

--------\Cancer Lists\----------

Ingredient	NTP Carcinogen Known	NTP Carcinogen Anticipated	IARC Category
Copper (7440-50-8)	No	No	None

12. Ecological Information

Environmental Fate:
No information found.
Environmental Toxicity:
No information found.

13. Disposal Considerations

or use of this information to any person or for use in any situation.

Section 1 - Product and Company Identification
CHROMIUM

Product Identification: CHROMIUM
Date of MSDS: 11/01/1993 **Technical Review Date:** 11/10/1995
FSC: 6810 **NIIN:** **LIIN:** 00N066370
Submitter: N EN
Status Code: C
MFN: 01
Article: N
Kit Part: N

Manufacturer's Information

Manufacturer's Name: HIGH-PURITY STANDARDS
Post Office Box: 30188
Manufacturer's Address1:
Manufacturer's Address2: CHARLESTON, SC 29417
Manufacturer's Country: US
General Information Telephone: 803-556-3411
Emergency Telephone: 803-556-3411
Emergency Telephone: 803-556-3411
MSDS Preparer's Name: N/P
Proprietary: N
Reviewed: N
Published: Y
CAGE: 0YZE5
Special Project Code: N

Contractor Information

Contractor's Name: HIGH-PURITY STANDARDS INC
Post Office Box: 30180
Contractor's Address1: 2040 SAVAGE RD
Contractor's Address2: CHARLESTON, SC 29417
Contractor's Telephone: 803-556-3411
Contractor's CAGE: 0YZE5

Section 2 - Compositon/Information on Ingredients
CHROMIUM

METALS, HYDROXIDES, CARBONATES, CYANIDES.

Hazardous Decomposition Products:
NO, NO*2.

Hazardous Polymerization Indicator: NO

Conditions to Avoid Polymerization:
NOT RELEVANT

Section 11 - Toxicological Information
CHROMIUM

Toxicological Information:
N/P

Section 12 - Ecological Information
CHROMIUM

Ecological Information:
N/P

Section 13 - Disposal Considerations
CHROMIUM

Waste Disposal Methods:
FOLLOW FEDERAL, STATE AND LOCAL REGULATIONS FOR ACID WASTE.

Section 14 - MSDS Transport Information
CHROMIUM

Transport Information:
N/P

Section 15 - Regulatory Information
CHROMIUM

SARA Title III Information:
N/P

Federal Regulatory Information:
N/P

State Regulatory Information:
N/P

Section 16 - Other Information
CHROMIUM

Other Information:
N/P

HAZCOM Label Information

Product Identification: CHROMIUM
CAGE: 0YZE5
Assigned Individual: N
Company Name: HIGH-PURITY STANDARDS INC
Company PO Box: 30180
Company Street Address1: 2040 SAVAGE RD
Company Street Address2: CHARLESTON, SC 29417 US
Health Emergency Telephone: 803-556-3411
Label Required Indicator: Y
Date Label Reviewed: 11/10/1995
Status Code: C
Manufacturer's Label Number:
Date of Label: 11/10/1995
Year Procured: N/K
Organization Code: G
Chronic Hazard Indicator: N
Eye Protection Indicator: YES
Skin Protection Indicator: YES
Respiratory Protection Indicator: YES
Signal Word: CAUTION
Health Hazard: Slight
Contact Hazard: Slight
Fire Hazard: None
Reactivity Hazard: None

APPENDIX E

Incident Report Form

GEI Consultants

Accident/Incident Report Form

Please complete this form and send it to your Branch Manager, HR and CHSO ***within 24 hours*** of the incident.

Section A — ACCIDENT/INCIDENT DETAILS

EMPLOYEE INFORMATION:	OTHER INJURED (IF APPLICABLE):
Name: *	Name:
Home Address: Street Address City State Zip Code	Home Address: Street Address City State Zip Code
Primary Phone:	Primary Phone:
Secondary Phone:	Secondary Phone:
Date of Birth:	Date of Birth:
Date of Hire:	Date of Hire:
Branch:	Branch:
Supervisor:	Supervisor:

Date and Time Accident/Incident	Date and Time Reported	LOCATION OF INCIDENT/ACCIDENT
Date:	Date:	Project Name:
Time:	Time:	Client:
		Location:

INCIDENT TYPE: (Check all the Applies)	WITNESS INFORMATION:
☐ Personal Injury/Illness	Name:
☐ Vehicle Accident	Contact Number:
☐ Property Damage	Company:
☐ Environmental Spill	
☐ Other	

WHAT HAPPENED TO THE INJURED PARTY: ☐ First Aid Administered ☐ Refused Treatment/Transport ☐ Transported to Hospital ☐ Returned to Work ☐ Went to Physician ☐ Unknown

Clinic/Hospital/Physician: Phone:

Address:
Street Address City State Zip Code