Advanced Cleanup Technologies, Inc.
ENVIRONMENTAL CONSULTANTS

December 18, 2015

New York City Office of Environmental Remediation
City Voluntary Cleanup Program
c/o Shaminder Chawla
100 Gold Street, 2nd Floor
New York, NY 10038

Re: VCP # 16CVCP045Q
E-Designation # 16EH-N161Q
36-33 31st Street
Remedial Action Work Plan (RAWP) Stipulation List

Dear Mr. Chawla:

Advanced Cleanup Technologies, Inc. hereby submits a Remedial Action Plan (RAWP) Stipulation List for the Site to the New York City Office of Environmental Remediation (OER) on behalf of Zoitco LLC. This letter serves as an addendum to the RAWP to stipulate additional content, requirements, and procedures that will be followed during the site remediation. The contents of this list are added to the RAWP and will supersede the content in the RAWP where there is a conflict in purpose or intent. The additional requirements/procedures include the following Stipulation List below:

1. The criterion attached in **Appendix 1** will be utilized if additional petroleum containing tank or vessel is identified during the remedial action or subsequent redevelopment excavation activities. All petroleum spills will be reported to the NYSDEC hotline as required by applicable laws and regulations. This contingency plan is designed for heating oil tanks and other small or moderately sized storage vessels. If larger tanks, such as gasoline storage tanks are identified, OER will be notified before this criterion is utilized.

2. A pre-construction meeting is required prior to start of remedial excavation work at the site. A pre-construction meeting will be held at the site and will be attended by OER, the developer or developer representative, the consultant, excavation/general contractor, and if applicable, the soil broker.

3. A Historic Fill Transfer and Disposal Notification Form to each disposal facility and a pre-approval letter from all disposal facilities will be provided to OER prior to any soil/fill material removal from the site. The Historic Fill Transfer and Disposal Notification Form template is attached in **Appendix 2.** Documentation specified in the RAWP - Appendix 4 - Section 1.6 "Materials Disposal Off-Site" will be provided to OER. If a different disposal facility for the soil/fill material is selected, OER will be notified immediately.

4. Signage for the project will include a sturdy placard mounted in a publically accessible right of way to building and other permits signage will consist of the NYC VCP Information Sheet (attached **Appendix 3**) announcing the remedial action. The Information sheet will be laminated and permanently affixed to the placard.

5. If your site contains hazardous waste that will be excavated and disposed of offsite, OER can work with your development team to seek an exemption for your property from the $130/ton state Hazardous Waste Program Fee. To qualify for an exemption, your site must be enrolled in the city Voluntary Cleanup Program; hazardous waste must result from remedial action set forth in a cleanup plan approved by OER; and OER must oversee the cleanup. It is the applicant's responsibility to notify your OER Project Manager, copying supervising Project Manager and Shaminder Chawla, before hazardous waste is shipped from your site. Unless the Department of Environmental Conservation is notified before waste is shipped from your site, you may not receive an exemption from the fee. The exemption does not cover, and you remain liable for, the Special Assessment on Hazardous Waste (established by ECL§ 27-0923) which charges a fee of up to $27 per ton for hazardous waste generated that is due at the State Department of Taxation and Finance 30 days after the end of the quarter in which the waste was generated. **Appendix 4** includes additional information about the Exemption for Hazardous Waste Program Fee.

6. Collection and analysis of four end-point samples from the bottom of the excavation to evaluate the performance of the remedy with respect to attainment of Track 2 Restricted Residential SCOs. A map indicating end-point sampling locations is attached in **Appendix 5.** Samples will be analyzed for contaminants of concern [SVOCs and Metals].

7. OER requires parties seeking City Brownfield Incentive Grants to carry insurance. For a cleanup grant, both the excavator and the trucking firm(s) that handle removal of soil must carry or be covered under a commercial general liability (CGL) policy that provides $1 million per claim in coverage. OER recommends that excavators and truckers also carry contractors pollution liability (CPL) coverage, also providing $1 million per claim in coverage. The CGL policy, and the CPL policy if obtained, must name the City of New York, the NYC Economic Development Corporation, and Brownfield Redevelopment Solutions as additional insured. For an investigation grant, an environmental consultant must be a qualified vendor in the BIG program and carry $1

million of professional liability (PL) coverage. A fact sheet regarding insurance is attached as **Appendix 6**.

8. Daily reports will be provided during active excavation work. If no work is performed for extended time period, daily report frequency will be reduced to weekly basis. Daily report template is attached in **Appendix 7.**

9. Monthly reports will be provided by the owner/developer after excavation work is completed for the duration of the construction period. Monthly report template is attached in **Appendix 8**.

10. Trucking log sheets will be utilized as trucks are transported from sites, and completed logs should be attached to the Remedial Action Report (RAR) as an appendix. The goal of this log is to clearly document the destination of material leaving the site, the parties responsible for its transfer, and other pertinent details. The trucking log template is provided in **Appendix 9**.

11. A 20-mil vapor barrier will be installed beneath the structure's slab and along foundation sidewalls. The barrier chosen for this project is manufactured by Tex Trude Xtreme®. **Appendix 10** provides manufactures specifications and PE/RA certified building plans with the extent of the vapor barrier installation details (penetrations, joints, etc.) with respect to the proposed foundation, footings, etc.

12. An engineered composite site cover will be placed over the entire footprint of the Site. The composite cover system will be comprised of concrete building foundation/slabs and a concrete capped parking area. Drawings of the composite site cover, including construction details, are provided as **Appendix 11**.

13. Truck route is included in **Appendix 12.**

14. Item 16 of the proposed remedial action described in the Executive Summary and Section 4.1 of the RAWP will read:

    "As part of development, construction of an engineered composite cover consisting of a six-inch thick reinforced concrete building slab will be constructed beneath the building."

15. The composite cover system described in Section 4.3 of the RAWP is revised by changing the first bulleted item to read "Twelve to eighteen-inch thick poured reinforced concrete foundation walls" and by deleting the following bulleted item:

    "Six-inch thick concrete masonry unit with reinforcing vertical bars at the grade level parking"

16. Dewatering will be performed in full compliance with applicable laws, rules and regulations. Dewatering permit will be obtained from NYCDEP prior to construction activities.

17. The signed RIR certification page and stamped/signed RAWP certification page is included in **Appendix 13.**

18. Development plans are attached in **Appendix 14**.

Sincerely,

Paul P. Stewart, QEP
Advanced Cleanup Technologies, Inc.
110 Main Street, Suite 103
Port Washington, New York 11050
Phone: (516) 441-5800 x 103
Cell: (516) 840-8197
Fax: (516) 441-5511
Email: pauls@actenvirons.com

Cc: K. Glass, NYCOER

Appendix 1
Generic Procedures for Management of Underground Storage Tanks
Identified under the NYC VCP

Prior to Tank removal, the following procedures should be followed:

- Remove all fluid to its lowest draw-off point.
- Drain and flush piping into the tank.
- Vacuum out the "tank bottom" consisting of water product and sludge.
- Dig down to the top of the tank and expose the upper half.
- Remove the fill tube and disconnect the fill, gauge, product, vent lines and pumps. Cap and plug open ends of lines.
- Temporarily plug all tank openings, complete the excavation, remove the tank and place it in a secure location.
- Render the tank safe and check the tank atmosphere to ensure that petroleum vapors have been satisfactorily purged from the tank.
- Clean tank or remove to storage yard for cleaning.
- If the tank is to be moved, it must be transported by licensed waste transporter. Plug and cap all holes prior to transport leaving a 1/8 inch vent hole located at the top of the tank during transport.
- After cleaning, the tank must be made acceptable for disposal at a scrap yard, cleaning the tanks interior with a high pressure rinse and cutting the tank in several pieces.

During the tank and pipe line removal, the following field observations should be made and recorded:

- A description and photographic documentation of the tank and pipe line condition (pitting, holes, staining, leak points, evidence of repairs, etc.).
- Examination of the excavation floor and sidewalls for physical evidence of contamination (odor, staining, sheen, etc.).
- Periodic field screening (through bucket return) of the floor and sidewalls of the excavation, with a calibrated photoionization detector (PID).

<u>Impacted Soil Excavation Methods</u>
The excavation of the impacted soil will be performed following the removal of the existing tanks. Soil excavation will be performed in accordance with the procedures described under Section 5.5 of Draft DER-10 as follows:

- A description and photographic documentation of the excavation.
- Examination of the excavation floor and sidewalls for physical evidence of contamination (odor, staining, sheen, etc.).
- Periodic field screening (through bucket return) of the floor and sidewalls of the excavation, with calibrated photoionization detector (PID).

Final excavation depth, length, and width will be determined in the field, and will depend on the horizontal and vertical extent of contaminated soils as indentified through physical examination (PID response, odor, staining, etc.). Collection of verification samples will be performed to evaluate the success of the removal action as specified in this document.
The following procedure will be used for the excavation of impacted soil (as necessary and appropriate):

- Wear appropriate health and safety equipment as outlined in the Health and Safety Plan.

- Prior to excavation, ensure that the area is clear of utility lines or other obstructions. Lay plastic sheeting on the ground next to the area to be excavated.
- Using a rubber-tired backhoe or track mounted excavator, remove overburden soils and stockpile, or dispose of, separate from the impacted soil.
- If additional UST's are discovered, the NYSDEC will be notified and the best course of action to remove the structure should be determined in the field. This may involve the continued trenching around the perimeter to minimize its disturbance.
- If physically contaminated soil is present (e.g., staining, odors, sheen, PID response, etc.) an attempt will be made to remove it, to the extent not limited by the site boundaries or the bedrock surface. If possible, physically impacted soil will be removed using the backhoe or excavator, segregated from clean soils and overburden, and staged on separated dedicated plastic sheeting or live loaded into trucks from the disposal facility. Removal of the impacted soils will continue until visibly clean material is encountered and monitoring instruments indicate that no contaminants are present.
- Excavated soils which are temporarily stockpiled on-site will be covered with tarp material while disposal options are determined. Tarp will be checked on a daily basis and replaced, repaired or adjusted as needed to provide full coverage. The sheeting will be shaped and secured in such a manner as to drain runoff and direct it toward the interior of the property.

Once the site representative and regulatory personnel are satisfied with the removal effort, verification of confirmatory samples will be collected from the excavation in accordance with DER-10.

Appendix 2

Historic Fill Transfer and Disposal Notification Form

Historic Fill & Soil Disposal Notification Form
New York City Office of Environmental Remediation

Historic Fill & Soil Disposal Notification Form
New York City Office of Environmental Remediation

Date: _____

To operators and representatives of disposal facilities and government regulators:

The New York City Office of Environmental Remediation (OER) operates several environmental remediation regulatory programs in New York City that manage light to moderately contaminated properties that are planned for redevelopment. These projects commonly involve the removal of historical fill and soil from properties for development and other purposes. As with any environmental regulatory program, lawful transport and disposal of historic fill and soil is mandatory. It is also our highest priority.

Disposal facilities, recycling facilities and clean fill facilities (collectively, "receiving facilities") for historic fill and soil may be located in New York or neighboring states. Our research has indicated that a wide range of facility types and a complex set of regulatory requirements and obligations for a receiving facility operation exist within each jurisdiction. Receiving facilities are required to comply with applicable laws and regulations and may operate under state and local authority via permits, licenses, registrations, agreements and other legal instruments that dictate requirements for the material they can receive. Operating requirements may include adherence to applicable chemical standards, guidance levels, criteria, policy or other bases to determine the suitability for receipt of historical fill or soil at a receiving facility. Such requirements may also specify sample frequency, location, sampling method, chemical analytes, or analytical methods. Receiving facility soil/fill sampling requirements often differ from standard remedial investigation protocol performed in the original environmental study of the property.

Given the variability of data requirements for receiving facilities, the wide range of receiving facility types, and the complexity of regulatory requirements and obligations, OER is seeking to assist government regulators and facility operators and their technical representatives to achieve compliance with regulatory requirements for disposal of historic fill and soil at receiving facilities for projects we administer. Further, we seek to ensure that all of the data and information that is developed in OER's regulatory programs (for instance, site environmental history and soil chemistry) is available to government regulators and to facility managers when making decisions on suitability for disposal to a receiving facility.

This document provides formal notification from OER of the availability of environmental information regarding the physical and chemical content of historical fill and soil that is proposed for transfer to a disposal, recycling or clean fill facility from a property located at:

[36-33 31st Street, Queens, New York]
[OER Site: 16EH-N161Q]

The above referenced property has undergone regulated environmental investigation and is the subject of remedial action work plan under the authority of OER. All environmental data and information generated during this regulatory process is available online in OER's Document Repository listed below. Be advised that many properties are also regulated under state environmental law, and additional data may be available from state agencies. OER reserves the right to share this information with applicable state regulators.

http://www.nyc.gov/html/oer/html/document-repository/document-repository.shtml

Note: when logged on to above URL, select the borough for the site (listed in the address above) and scroll through the list and select the address for the site (listed above). All documents are available in PDF format.

According to New York State DER-10 Technical Guidance for Site Investigation and Remediation, historical fill is non-indigenous fill material deposited on a property to raise its topographic elevation. The origin of historical fill is unknown but it is commonly known to contain ash from wood and coal combustion, slag, clinker, construction debris, dredge spoils, incinerator residue, and demolition debris. Historic fill is a regulated solid waste in the State of New York. Prior to making a determination regarding the suitability of historic fill and/or soil from this property for disposal at this receiving facility, **we strongly recommend that you review all of the data and information available for this property in our Document Repository** listed above. The repository includes:

- A Phase 1 history of use of the property;
- A Remedial Investigation Report for the property which includes:
    - Boring logs that describe physical observations of the historical fill material made by a trained environmental professional;

    - Chemical data for grab samples of historical fill collected during the remedial investigation;
- A Remedial Action Work Plan for the property.

If you have any questions, please contact Horace Zhang at (212) 788-8484 or Hzhang@dep.nyc.gov for more information.

Appendix 3
NYC VCP Signage

NYC Voluntary Cleanup Program

36-33 31st Street
Site #: 16CVCP045Q

This property is enrolled in the New York City Voluntary Cleanup Program for environmental remediation. This is a voluntary program administered by the NYC Office of Environmental Remediation.

For more information,
log on to: www.nyc.gov/oer

Or scan with smart phone:

If you have questions or would like more information, please contact:

Shaminder Chawla at (212) 442-3007
or email us at brownfields@cityhall.nyc.gov

Appendix 4
Hazardous Waste Fee Exemption Fact Sheet

PlaNYC
NYC Office of Environmental Remediation

Exemption from the Hazardous Waste Program Fee

If your site is enrolled in the city Voluntary Cleanup Program and contains hazardous waste that will be excavated and disposed of offsite, OER can work with your development team to exempt your property from the $130/ton state Hazardous Waste Program fee. This exemption does not cover, and you remain liable for, the Special Assessment on Hazardous Waste (established by ECL§ 27-0923).

To qualify for an exemption from the Hazardous Waste Program Fee:

1. A site must be enrolled in the city Voluntary Cleanup Program;
2. Hazardous waste must result from remedial action set forth in a cleanup plan approved by OER; and
3. OER must oversee the cleanup.

Process for obtaining a Hazardous Waste Program Fee exemption:

For each VCP site, OER will submit three certifications to the New York State Department of Environmental Conservation (DEC):

1. OER will prepare a Notice of Potential Generation after a soil test shows a site contains hazardous waste. To prepare this Notice, you must provide your OER project manager with:

   - the site's EPA generator ID number;
   - the date of the soil test confirming hazardous waste;
   - the amount of hazardous waste in tons that you anticipate shipping offsite; and
   - the anticipated dates for the start and completion of remediation.

DEC must receive this form **before** hazardous waste is shipped from your site. Otherwise your claim for an exemption may be denied.

2. After hazardous waste has been removed from the site, OER will distribute a Certification of Hazardous Waste Generation to your project team which when filled out documents how the hazardous waste was managed. Once completed, it must be signed by the generator (or site owner) and the site's Qualified Environmental Professional and returned to your OER project manager with a copy to Shana Holberston sholbertson@dep.nyc.gov and Mark McIntyre mmcintyre@cityhall.nyc.gov.

3. OER will then issue a Certification of Remedial Action that Generated Hazardous Waste to DEC representing OER's approval of how a site managed its hazardous waste.

Upon OER's submission of the last two certifications to DEC, the agency will issue a written statement exempting an individual site from the Hazardous Waste Program Fee. OER will then notify the project of the exemption.

For further information, please contact:

Shana Holberton
Program Manager
(212) 788-3220
SHolberton@dep.nyc.gov

or

Mark McIntyre
General Counsel
(212) 788-3015
MMcintyre@cityhall.nyc.gov

PlaNYC

NYC Office of Environmental Remediation

Exemption from the Hazardous Waste Program Fee

Ongoing Obligations:

Regardless of the Hazardous Waste Program Fee exemption, parties must:

- File a Hazardous Waste Annual Report with DEC by March 1 of each year if your site generated 15 tons of hazardous waste or more in the relevant calendar year. For details, see http://www.dec.ny.gov/chemical/8770.html To set forth the basis for an exemption from the Hazardous Waste Program Fee, put an X in the Exempt Remedial box in Box H of Section 1 of the Waste Generation and Management (GM) form and in the Comments Box (at the bottom of the form) include "New York City Voluntary Cleanup Program, VCP Site Number_____)"; and

- Make quarterly payments of the Special Assessment on Hazardous Waste to the state Department of Taxation and Finance. For details see: http://www.tax.ny.gov/bus/haz/hzrdwste.htm

Appendix 5
End-Point Sampling Map

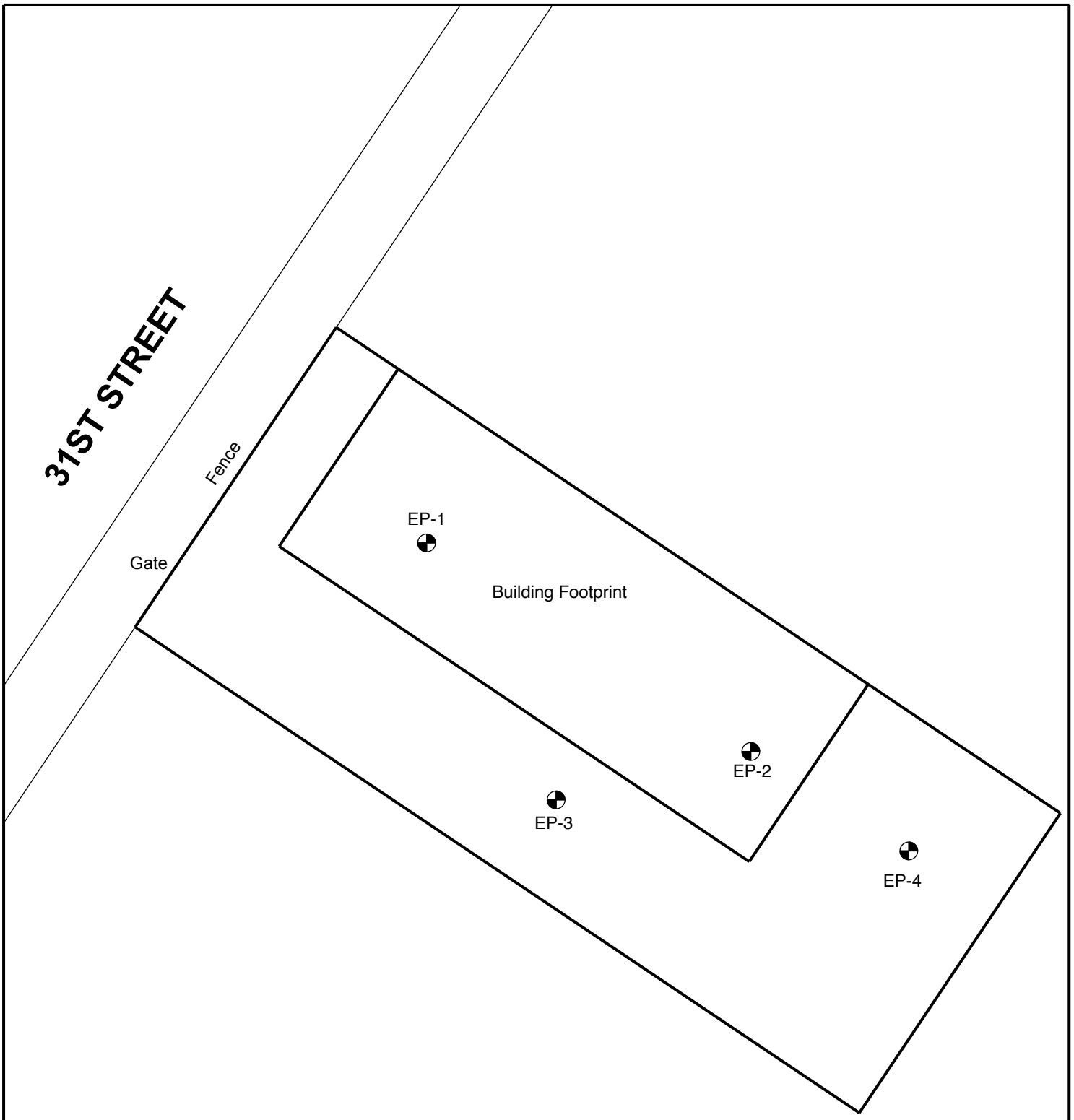

Legend

EP-1 Endpoint Sample Location

N

Endpoint Sampling Diagram

Advanced Cleanup Technologies, Inc.
ENVIRONMENTAL CONSULTANTS
110 Main Street, Suite 103, Port Washington, New York 11050
Tel: 516-441-5800 Fax: 516-441-5511

Project No.: 8459-LINY	Figure No.: 6
Date: 12/03/2015	Scale: Not To Scale

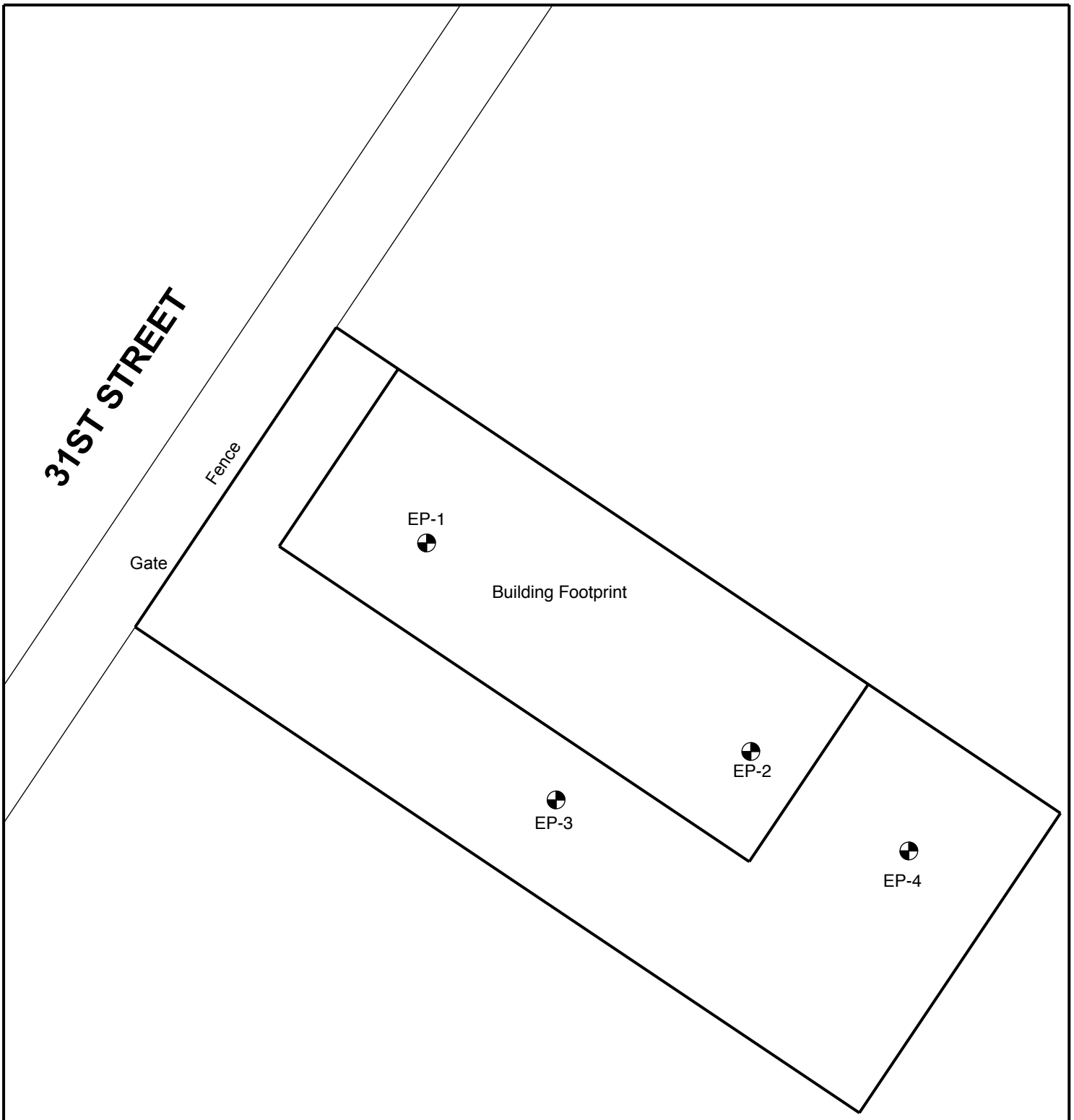

Legend

EP-1 Endpoint Sample Location

N

Endpoint Sampling Diagram

Advanced Cleanup Technologies, Inc.
ENVIRONMENTAL CONSULTANTS
110 Main Street, Suite 103, Port Washington, New York 11050
Tel: 516-441-5800 Fax: 516-441-5511

Project No.: 8459-LINY	Figure No.: 6
Date: 12/03/2015	Scale: Not To Scale

Appendix 6
BIG Program Insurance Fact Sheet

FACT SHEET – BIG PROGRAM INSURANCE REQUIREMENTS

Investigation Grants – for a developer or site owner to be eligible for a BIG investigation grant, its environmental consultant(s) must be:

- a Qualified Vendor in the BIG Program; and
- maintain Professional Liability (PL) insurance of $1M per claim and annual aggregate.

Cleanup Grants – for a developer or site owner to be eligible for a BIG cleanup grant:

- Its general contractor or excavation/foundation contractor hired to perform remedial work must maintain Commercial General Liability (CGL) insurance of at least $1M per occurrence and $2M in the general aggregate. It is recommended that the general contractor or excavation/foundation contractor also maintain a Contractors Pollution Liability policy (CPL) of at least $1M per occurrence.

- Its subcontractors who are hired by the general contractor etc. to perform remedial work at a site, including soil brokers and truckers, must also maintain a CGL policy in the amount and with the terms set forth above. It is recommended that subcontractors also maintain a CPL policy in the amount and with the terms set forth above.

  The CGL policy, and the CPL policy if in force, must list the city, EDC and BRS as additional insureds, include completed operations coverage and be primary and non-contributory to any other insurance the additional insureds may have.

- Its environmental consultant(s) hired to oversee the cleanup must be:
  a. a BIG Qualifed Vendor; and
  b. maintain Professional Liability (PL) insurance of $1M per claim and annual aggregate.

If, in the alternative, the developer hires its environmental consultant to perform the cleanup, the environmental consultant must maintain CGL insurance in the amount and with the terms set forth above. It is recommended that the environmental consultant also maintain CPL coverage in the amount and with the terms set forth in the first two bulleted items listed above.

A schematic presenting the contractual relationships described above appears on page 2. Parties who must be named as Additional Insureds on Cleanup Grant insurance policies (CGL and CPL) are presented on page 3.

Example of Contractual Relationships for Cleanup Work

The Office of Environmental Remediation's Voluntary Cleanup Plan program requires applicants to identify the parties who are engaged in active remediation of their sites including: the General Contractor hired to remediate and/or the excavation contractor hired to excavate soil from the site and the trucking firm(s) that remove soil from the site for disposal at approved facilit(ies).

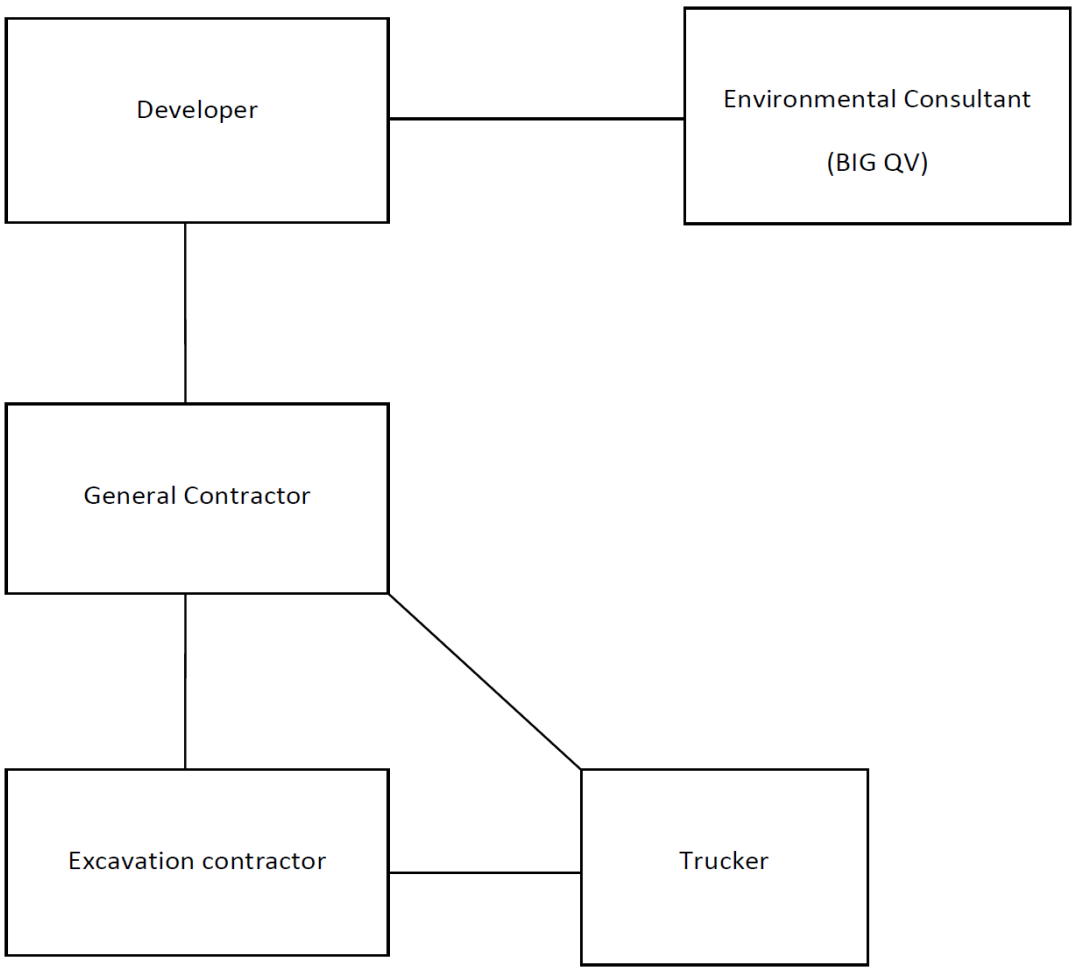

The chart above shows contractual relationships that typically exist for projects that are enrolled in the Voluntary Cleanup Program.

BIG Program Additional Insureds

The full names and addresses of the additional insureds required under the Required CGL Policy and recommended CPL Policy are as follows:

"City and its officials and employees"
New York City Mayor's Office of Environmental Remediation
253 Broadway, 14th Floor
New York, NY 10007

"NYC EDC and its officials and employees"
New York City Economic Development Corporation
110 William Street
New York, NY 10038

"BIG Grant Administrator and its officials and employees"
Brownfield Redevelopment Solutions, Inc.
739 Stokes Road, Units A & B
Medford, NJ 08055

Appendix 7
Daily Report Template

Office of Environmental Remediation

Daily Status Report Template
Version 1.3

Generic Template for Daily Status Report

Instructions

The Daily Status Report submitted to OER should adhere to the following conventions:

- Remove this cover sheet prior to editing.
- Remove all the red text and replace with site-specific information.
- Submit the final version as a Word or PDF file.

Daily Status Reports

Daily status reports providing a general summary of activities for each day of *active remedial work* will be emailed to the OER Project Manager by the end of the following day. Those reports will include:

- Project number and statement of the activities and an update of progress made and locations of work performed;
- Quantities of material imported and exported from the Site;
- Status of on-Site soil/fill stockpiles;
- A summary of all citizen complaints, with relevant details (basis of complaint; actions taken; etc.);
- A summary of CAMP excursions, if any;
- Photograph of notable Site conditions and activities.

The frequency of the reporting period may be revised in consultation with OER project manager based on planned project tasks. Daily email reports are not intended to be the primary mode of communication for notification to OER of emergencies (accidents, spills), requests for changes to the RAWP or other sensitive or time critical information. However, such information will be included in the daily reports. Emergency conditions and changes to the RAWP will be communicated directly to the OER project manager by personal communication. Daily reports will be included as an Appendix in the Remedial Action Report.

DAILY STATUS REPORT

Prepared By: Enter Your Name Here

WEATHER	Snow		Rain		Overcast		Partly Cloudy	x	Bright Sun	
TEMP.	< 32		32-50		50-70	x	70-85		>85	

VCP Project No.:	14CVCP000M	E-Number Project No.:	14EHAN000M	Date:	01/01/2014
Project Name:	Name or Address				

Consultant: Person(s) Name and Company Name	Safety Officer: Person(s) Name and Company Name
General Contractor: Person(s) Name and Company Name	Site Manager/ Supervisor: Person(s) Name and Company Name
Work Activities Performed (Since Last Report): Provide details about the work activities performed.	
Working In Grid #: A1, B1, C1	

Samples Collected (Since Last Report): No samples collected or provide details
Air Monitoring (Since Last Report): No air monitoring performed or provide details Prestart Conditions – PID = 0.0 ppm, Dust = 0.000 High Conditions – PID = 0.0 ppm, Dust = 0.000
Problems Encountered: No problems encountered or provide details
Planned Activities for the Next Day/ Week: Provide details about the work activities planned for the next day/ week.

									Example:	
Facility # Name/ Location Type of Waste Solid Or Liquid	Facility # Name Location Type of Waste Solid *Or* Liquid		Facility # Name Location Type of Waste Solid *Or* Liquid		Facility # Name Location Type of Waste Solid *Or* Liquid		Facility # Name Location Type of Waste Solid *Or* Liquid		###### Clean Earth Carteret, NJ petroleum soils Solid	
(Trucks, Cu.Yds. Or Gallons)	Trucks	Cu. Yds. *Or* Gallons	Trucks	Cu. Yds. *Or* Gallons	Trucks	Cu. Yds. *Or* Gallons	Trucks	Cu. Yds. *Or* Gallons	Trucks	Cu. Yds.
Today									5	120
Total									25	600

NYC Clean Soil Bank		Receiving Facility: Name/ Address (Approved by OER)			
Tracking No.:	13CCSB000				
Today	Trucks 5	Cu. Yds. 25	Total	Trucks 120	Cu. Yds. 600

Site Grid Map

Insert the site grid map here

Photo Log

Photo 1 – provide a caption	Insert Photo Here – Photo of the entire site
Photo 2 – provide a caption	Insert Photo Here – Photo of the work activities performed
Photo 3 – provide a caption	Insert Photo Here – Photo of the work activities performed

Appendix 8
Monthly Report Template

WEEKLY/MONTHLY STATUS REPORT

Prepared By: Enter Your Name Here

VCP Project No.:	14CVCP000M	E-Number Project No.:	14EHAN000M	Date:	01/01/2014

Project Name:	Name or Address

Project Updates (Since Last Report):
Provide details about the work activities performed.

Problems Encountered:
No problems encountered or provide details

Planned Activities for the Next three months:
Provide details about the future work activities.

Photo Log

Photo 1 – provide a caption	Insert Photo Here – Photo of the entire site
Photo 2 – provide a caption	Insert Photo Here – Photo of the work activities performed
Photo 3 – provide a caption	Insert Photo Here – Photo of the work activities performed

Appendix 9

Soil Disposal and Trucking Log Sheet

Shipment Date	Manifest Number	Transporter Name/Truck Name	License Plate	On-Site Location (approx. depth)	Off-Site Disposal Facility	Tonnage
8/25/2013	66357	ABC Trucking/201	NJ-AP458	WC-1(0-8')	Jones Landfill	32.90

Appendix 10

Vapor Barrier Installation Details

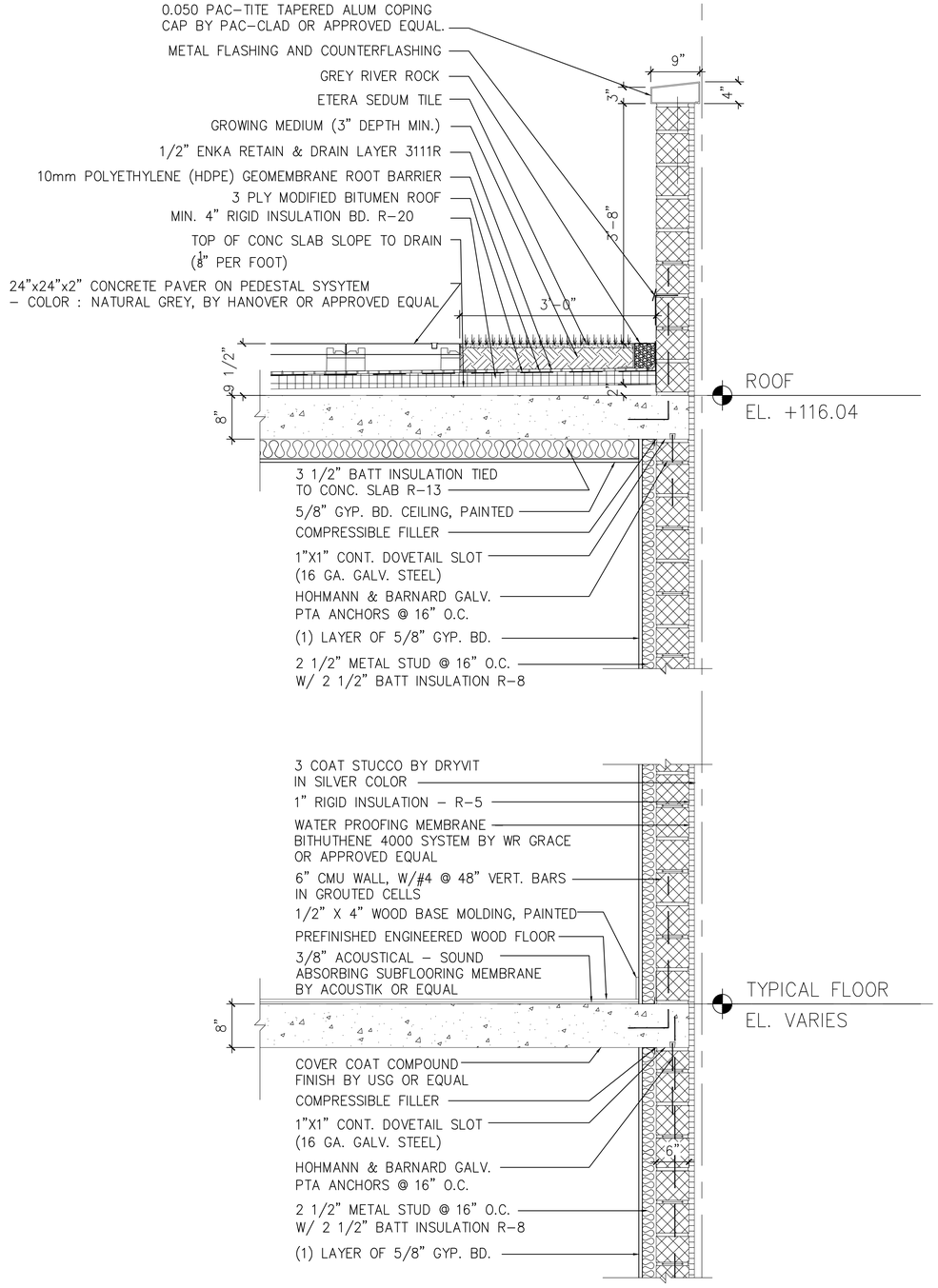

WALL SECTION DETAILS
SCALE: 1" = 1'-0"

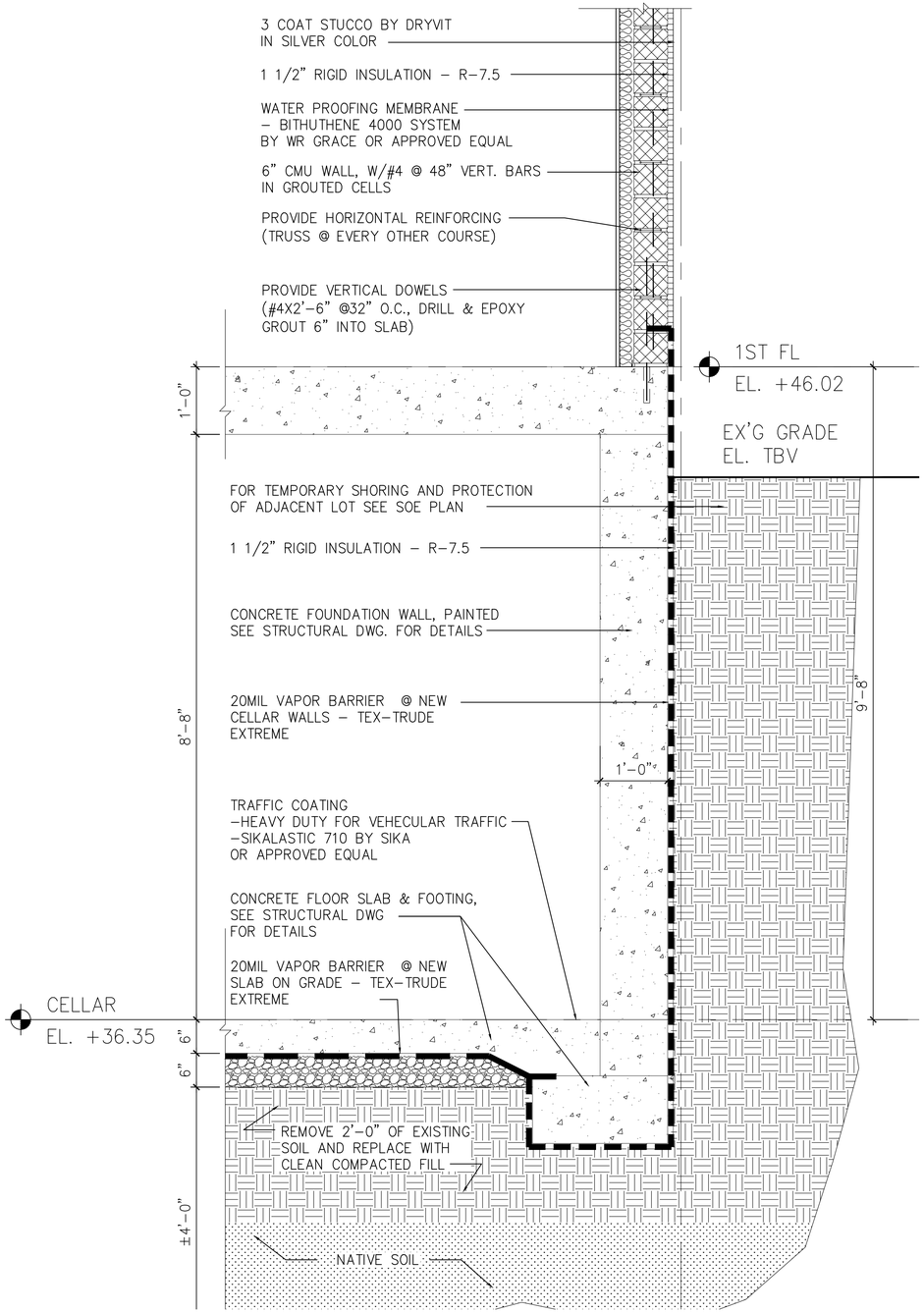

WALL SECTION DETAILS
SCALE: 1" = 1'-0"

ARCHITECT:
MORALI ARCHITECTURE
505 8th AVENUE, SUITE 2202, NEW YORK, NY, 10018
TEL. 212 219 2091 E-MAIL:JMORALI@MORALIARCHITECTURE.COM

IMA ENGINEERING, PC
123-23 82 AVENUE, KEW GARDENS, NY, 11415 TEL: 718 268 8600

ADVANCED CLEANUP TECHNOLOGIES, INC.
110 MAIN STREET, SUITE 103, PORT WASHINGTON, NY, 11050

COPYRIGHT (C)
THESE PLAN ARE AN INSTRUMENT OF SERVICE AND ARE THE PROPERTY OF THE ARCHITECT.
This and all documents produced by this firm under this agreement shall remain the sole property of this firm and may not be used, copied, changed or distributed by the client or others without the written consent of this firm.
INFRINGEMENTS WILL BE PROSECUTED.

CONTRACTOR SHALL VERIFY ALL CONDITIONS AND MEASUREMENTS IN THE FIELD AND BE RESPONSIBLE FOR FIELD FIT AND QUANTITY OF WORK. NO ALLOWANCES SHALL BE MADE IN BEHALF OF THE CONTRACTOR FOR ANY ERROR OR NEGLECT ON HIS PART.

"THIS PLAN IS APPROVED ONLY FOR WORK INDICATED ON THE APPLICATION SPECIFICATION SHEET. ALL OTHER MATTERS SHOWN ARE NOT TO BE RELIED UPON, OR TO BE CONSIDERED AS EITHER BEING APPROVED OR IN ACCORDANCE WITH APPLICABLE CODES."

No.	Description	Date

PROJECT
36-37 31ST STREET
LONG ISLAND CITY, NY
11106

WALL SECTION DETAILS

SCALE : AS NOTED

Date	10.12.15
Project Number	1507
Drawn By	CI
Checked By	AM

A-201.00

Appendix 11

Composite Site Cover Details

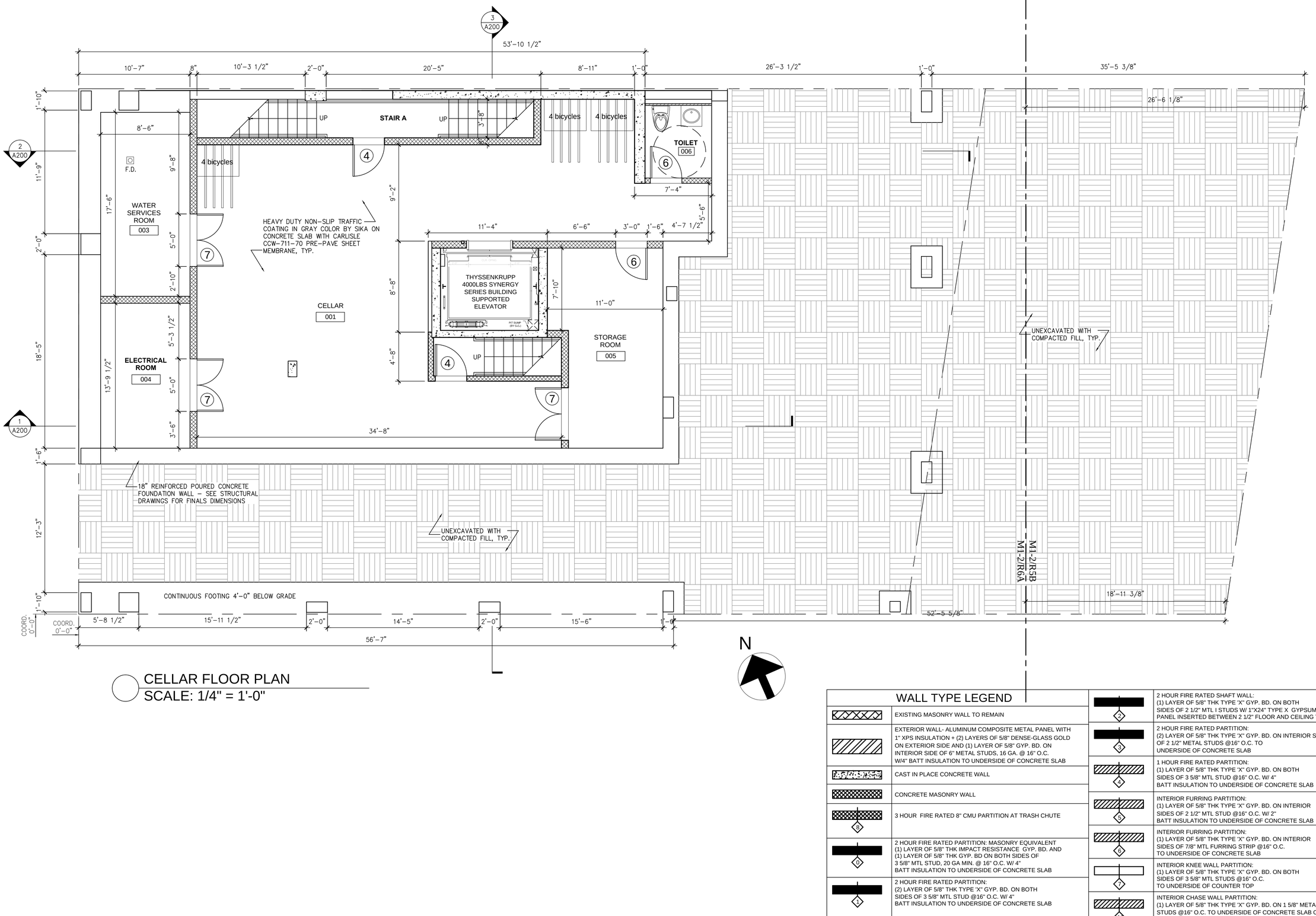

CELLAR FLOOR PLAN
SCALE: 1/4" = 1'-0"

WALL TYPE LEGEND

	EXISTING MASONRY WALL TO REMAIN
	EXTERIOR WALL- ALUMINUM COMPOSITE METAL PANEL WITH 1" XPS INSULATION + (2) LAYERS OF 5/8" DENSE-GLASS GOLD ON EXTERIOR SIDE AND (1) LAYER OF 5/8" GYP. BD. ON INTERIOR SIDE OF 6" METAL STUDS, 16 GA. @ 16" O.C. W/4" BATT INSULATION TO UNDERSIDE OF CONCRETE SLAB
	CAST IN PLACE CONCRETE WALL
	CONCRETE MASONRY WALL
8	3 HOUR FIRE RATED 8" CMU PARTITION AT TRASH CHUTE
0	2 HOUR FIRE RATED PARTITION: MASONRY EQUIVALENT (1) LAYER OF 5/8" THK IMPACT RESISTANCE GYP. BD. AND (1) LAYER OF 5/8" THK GYP. BD ON BOTH SIDES OF 3 5/8" MTL STUD, 20 GA MIN. @ 16" O.C. W/ 4" BATT INSULATION TO UNDERSIDE OF CONCRETE SLAB
1	2 HOUR FIRE RATED PARTITION: (2) LAYER OF 5/8" THK TYPE 'X" GYP. BD. ON BOTH SIDES OF 3 5/8" MTL STUD @16" O.C. W/ 4" BATT INSULATION TO UNDERSIDE OF CONCRETE SLAB
2	2 HOUR FIRE RATED SHAFT WALL: (1) LAYER OF 5/8" THK TYPE 'X" GYP. BD. ON BOTH SIDES OF 2 1/2" MTL I STUDS W/ 1"X24" TYPE X GYPSUM PANEL INSERTED BETWEEN 2 1/2" FLOOR AND CEILING TRACK
3	2 HOUR FIRE RATED PARTITION: (2) LAYER OF 5/8" THK TYPE 'X" GYP. BD. ON INTERIOR SIDE OF 2 1/2" METAL STUDS @16" O.C. TO UNDERSIDE OF CONCRETE SLAB
4	1 HOUR FIRE RATED PARTITION: (1) LAYER OF 5/8" THK TYPE 'X" GYP. BD. ON BOTH SIDES OF 3 5/8" MTL STUD @16" O.C. W/ 4" BATT INSULATION TO UNDERSIDE OF CONCRETE SLAB
5	INTERIOR FURRING PARTITION: (1) LAYER OF 5/8" THK TYPE 'X" GYP. BD. ON INTERIOR SIDES OF 2 1/2" MTL STUD @16" O.C. W/ 2" BATT INSULATION TO UNDERSIDE OF CONCRETE SLAB
6	INTERIOR FURRING PARTITION: (1) LAYER OF 5/8" THK TYPE 'X" GYP. BD. ON INTERIOR SIDES OF 7/8" MTL FURRING STRIP @16" O.C. TO UNDERSIDE OF CONCRETE SLAB
7	INTERIOR KNEE WALL PARTITION: (1) LAYER OF 5/8" THK TYPE 'X" GYP. BD. ON BOTH SIDES OF 3 5/8" MTL STUDS @16" O.C. TO UNDERSIDE OF COUNTER TOP
11	INTERIOR CHASE WALL PARTITION: (1) LAYER OF 5/8" THK TYPE 'X" GYP. BD. ON 1 5/8" METAL STUDS @16" O.C. TO UNDERSIDE OF CONCRETE SLAB ON BOTH SIDES OF 4" CHASE SPACE

ARCHITECT:
MORALI ARCHITECT
505 8th AVENUE, SUITE 2202, NEW YORK, NY, 10018
TEL. 212 219 2091 E-MAIL: MSTUDIONY@AOL.COM

IMA ENGINEERING , PC
123-23 82 AVENUE, KEW GARDENS, NY, 11415 TEL: 718 268 8600

ADVANCED CLEANUP TECHNOLOGIES, INC.
110 MAIN STREET, SUITE 103, PORT WASHINGTON, NY, 11050

COPYRIGHT (C)
THESE PLAN ARE AN INSTRUMENT OF SERVICE AND ARE THE PROPERTY OF THE ARCHITECT.
This and all documents produced by this firm under this agreement shall remain the sole property of this firm and may not be used, copied, changed or distributed by the client or others without the written consent of this firm.
INFRINGEMENTS WILL BE PROSECUTED.

CONTRACTOR SHALL VERIFY ALL CONDITIONS AND MEASUREMENTS IN THE FIELD AND BE RESPONSIBLE FOR FIELD FIT AND QUANTITY OF WORK. NO ALLOWANCES SHALL BE MADE IN BEHALF OF THE CONTRACTOR FOR ANY ERROR OR NEGLECT ON HIS PART.

"THIS PLAN IS APPROVED ONLY FOR WORK INDICATED ON THE APPLICATION SPECIFICATION SHEET. ALL OTHER MATTERS SHOWN ARE NOT TO BE RELIED UPON, OR TO BE CONSIDERED AS EITHER BEING APPROVED OR IN ACCORDANCE WITH APPLICABLE CODES."

No.	Description	Date

PROJECT
36-37 31ST STREET
LONG ISLAND CITY, NY
11106

CELLAR FLOOR PLAN

SCALE : AS NOTED

SEAL

Date	10.12.15
Project Number	1507
Drawn By	CI
Checked By	AM

A-100.00

Appendix 12

Truck Route

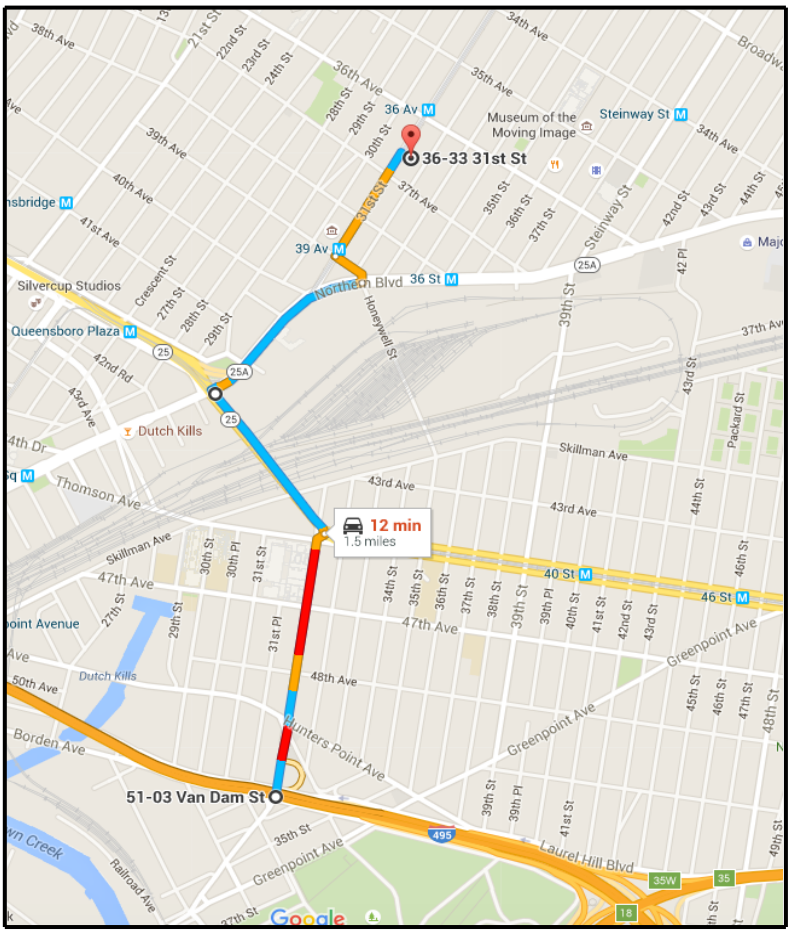

Souce: Google Maps

N

Truck Route

Advanced Cleanup Technologies, Inc.
ENVIRONMENTAL CONSULTANTS
110 Main Street, Suite 103, Port Washington, New York 11050
Tel: 516-441-5800 Fax: 516-441-5511

Project No.: 8459-LINY	Figure No.: 1
Date: 12/14/2015	Scale: Not To Scale

Appendix 13

RIR and RAWP Certification Pages

CERTIFICATION

I, Paul Stewart, am a Qualified Environmental Professional, as defined in RCNY § 43-1402(ar). I have primary direct responsibility for implementation of the Remedial Investigation for the Site located at 36-33 31st Street, Long Island City, New York, (NYC VCP Site No. 16CVCP045Q). I am responsible for the content of this Remedial Investigation Report (RIR), have reviewed its contents and certify that this RIR is accurate to the best of my knowledge and contains all available environmental information and data regarding the property.

Paul P. Stewart 12/18/15

Qualified Environmental Professional Date Signature

CERTIFICATION

I, Andrew R. Levenbaum, am currently a registered professional engineer licensed by the State of New York. I performed professional engineering services and had primary direct responsibility for designing the remedial program for the 36-33 31st Street site, site numbers 16CVCP045Q and 16EH-N161Q. I certify to the following:

- I have reviewed this document and the Stipulation List, to which my signature and seal are affixed.
- Engineering Controls developed for this remedial action were designed by me or a person under my direct supervision and designed to achieve the goals established in this Remedial Action Work Plan for this site.
- The Engineering Controls to be constructed during this remedial action are accurately reflected in the text and drawings of the Remedial Action Work Plan and are of sufficient detail to enable proper construction.
- This Remedial Action Work Plan (RAWP) has a plan for handling, transport and disposal of soil, fill, fluids and other materials removed from the property in accordance with applicable City, State and Federal laws and regulations. Importation of all soil, fill and other material from off-Site will be in accordance with all applicable City, State and Federal laws and requirements. This RAWP has provisions to control nuisances during the remediation and all invasive work, including dust and odor suppression.

ANDREW R. LEVENBAUM
Name

053854
PE License Number

Signature

12/15/15
Date

PE Stamp

I, Paul P. Stewart, am a qualified Environmental Professional. I will have primary direct responsibility for implementation of the remedial program for the 36-33 31st Street site, site numbers 16CVCP045Q and 16EH-N161Q. I certify to the following:

- This Remedial Action Work Plan (RAWP) has a plan for handling, transport and disposal of soil, fill, fluids and other materials removed from the property in accordance with applicable City, State and Federal laws and regulations. Importation of all soil, fill and other material from off-Site will be in accordance with all applicable City, State and Federal laws and requirements. This RAWP has provisions to control nuisances during the remediation and all invasive work, including dust and odor suppression.

Paul P. Stewart
QEP Name

QEP Signature

12/14/15
Date

Appendix 14

Development Plans

36-33 31ST STREET, LIC, NY, 11106

ZOITCO LLC - 21-16 31ST AVENUE, ASTORIA, NY, 11106

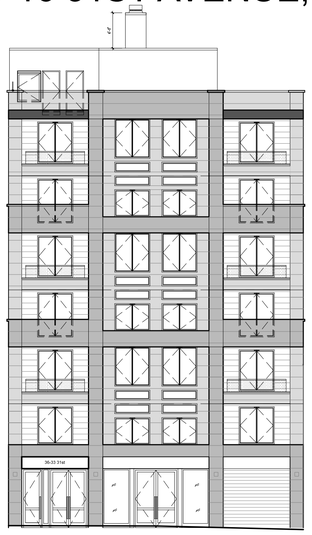

CONTROLLED INSPECTIONS REQ'D

TR-1 INSPECTIONS

1. FIRE RESISTANT PENETRATIONS & JOINTS BC1704.27
2. ENERGY CODE COMPLIANCE INSPECTIONS BC110.3.5 (TR-8)
3. FIRE-RESISTANCE RATED CONSTRUCTION BC 110.3.4

TR-8 INSPECTIONS

4. INSULATION PLACEMENT & R-VALUES (IA2) (IIA2)
5. FENESTRATION U-FACTOR & PRODUCT RATING (IA3) (IIA3)
6. FENESTRATION AIR LEAKAGE (IA4) (IIA4)
7. FENESTRATION AREAS (IA5) (IIA5)
8. AIR SEALING & INSULATION-VISUAL (IA6) (IIA6)
9. LIGHTING IN DWELLING UNITS (IIC2)
10. INTERIOR LIGHTING POWER (IC2) (IIC3)
11. LIGHTING CONTROLS (IIC5)
12. EXIT SIGNS (11C6)

OWNER WILL RETAIN A LICENSED ARCHITECT OR ENGINEER TO PERFORM CONTROLLED INSPECTIONS STATED ABOVE DURING CONSTRUCTION

FILING IN CONJUNCTION WITH APPLICATION

- DEMOLITION OF NON BEARING PARTITIONS #421090839
- SPRINKLER & STAND PIPE #421087816
- BUILDERS PAVEMENT PLAN #421149055
- CONSTRUCTION FENCE #421090820
- FIRE ALARM #421087825
- ELEVATOR FILED UNDER SEPARATE APPLICATION
- SAFETY NET AND SCAFFOLDING TO BE FILED UNDER SEPARATE APPLICATION
- SIDEWALK SHED TO BE FILED UNDER SEPARATE APPLICATION

INDEX OF DRAWINGS

ARCHITECTURAL DRAWINGS

T-001.00 COVER SHEET
Z-001.00 ZONING NOTES & MAPS
Z-002.00 ZONING AXONOMETRIC DRAWING
Z-003.00 ZONING FLOOR AREA DIAGRAMS
Z-004.00 ZONING SECTION
A-001.00 GENERAL NOTES & ABBREVIATIONS
A-002.00 NOTES
A-003.00 ADA DETAILS
A-100.00 CELLAR PLAN
A-101.00 1ST FLOOR PLAN
A-102.00 2ND FLOOR PLAN
A-103.00 3RD FLOOR PLAN
A-104.00 4TH FLOOR PLAN
A-105.00 5TH FLOOR PLAN
A-106.00 6TH FLOOR PLAN
A-107.00 7TH FLOOR PLAN
A-108.00 ROOF PLAN
A-109.00 ROOF BULKHEAD PLAN / SITE PLAN
A-200.00 SECTION DIAGRAMS
A-201.00 WALL SECTION DETAILS
A-202.00 WALL SECTION DETAILS
A-203.00 WALL SECTION DETAILS
A-300.00 FRONT & BACK EXTERIOR ELEVATIONS
A-301.00 SIDE (SW) EXTERIOR ELEVATION
A-302.00 SIDE (NE) EXTERIOR ELEVATION
A-401.00 1ST FLOOR R.C.P.
A-402.00 2ND FLOOR R.C.P.
A-403.00 3RD FLOOR R.C.P.
A-404.00 4TH FLOOR R.C.P.
A-405.00 5TH FLOOR R.C.P.
A-406.00 6TH FLOOR R.C.P.
A-407.00 7TH FLOOR R.C.P.
A-408.00 ROOF R.C.P.
A-500.00 STAIR SECTION DETAILS
A-501.00 COLUMN PLAN DETAILS
A-502.00 COLUMN PLAN DETAILS
A-503.00 MISCELLANEOUS DETAILS
A-700.00 DOOR SCHEDULE
A-701.00 DOOR DETAILS
A-702.00 HARDWARE SCHEDULE
A-703.00 HEAD & JAMB DETAILS & INTERIOR PARTITION TYPES
A-704.00 FINISH SCHEDULE
A-705.00 FINISH SCHEDULE
A-706.00 SADDLE DETAILS
A-707.00 SADDLE DETAILS
A-708.00 WINDOW SCHEDULE

NOTES

TENANT SAFETY NOTES:

1. General: All work to be done in accordance with the New York City Building Code, Article 19, and regulations of all other agencies having jurisdiction.
2. Structural: Contractor to provide adequate temporary bracing and shoring wherever any structural work is involved.
3. Means of egress: All existing means of egress for tenants of the building to be maintained clear and free of all obstructions, such as building materials, tools, etc.
4. Fire safety: All building materials stored at construction area of the building are to be secured in a locked area. Access to such areas to be controlled by Owner and/or General Contractor.
5. Dust Control: Debris, dirt, and dust to be confined to the immediate construction area; and cleared from building periodically to avoid any excessive accumulation.
6. Noise after hours: Construction operations will be confined to normal working hours: 8 a.m. to 5 p.m., Monday through Fridays, except legal holidays.
7. Construction operations will not involve interruption of heating, water, gas, or electrical services to other tenants of the building.
8. There will be no one occupying the areas under construction during the course of construction work.

TENANT PROTECTION NOTES:

1. Egress. At all times in the course of construction provision shall be made for adequate egress as required by this code and the tenant protection plan shall identify the egress that will be provided. Required egress shall not be obstructed at any time except where approved by the commissioner.
2. Fire safety. All necessary laws and controls, including those with respect to occupied dwellings, as well as additional safety measures necessitated by the construction shall be strictly observed.
3. Health requirements. Specification of methods to be used for control of dust, disposal of construction debris, pest control and maintenance of sanitary facilities, and limitation of noise to acceptable levels shall be included.
3.1. There shall be included a statement of compliance with applicable provisions of law relating to lead and asbestos.
4. Compliance with housing standards. The requirements of the New York city housing maintenance code, and, where applicable, the New York state multiple dwelling law shall be strictly observed.
5. Structural safety. No structural work shall be done that may endanger the occupants.
6. Noise restrictions. Where hours of the day or the days of the week in which construction work may be undertaken are limited pursuant to the New York city noise control code, such limitations shall be stated.

LEGENDS

- BRICK
- CONCRETE MASONRY UNITS
- REINFORCED CONCRETE
- GRAVEL
- PLASTER, SAND, CEMENT
- EARTH
- MARBLE
- GLASS-SECTION
- GLASS-ELEVATION
- BATT INSULATION
- RIGID INSULATION
- FINISH WOOD
- ROUGH WOOD, BLOCKING
- PLYWOOD
- METAL STUD WALL
- METAL-SMALL SCALE
- METAL-LARGE SCALE

SYMBOLS

- AREA OF WORK
- WALL TYPE
- DOOR DESIGNATION
- WINDOW DESIGNATION
- ELEVATION
- SECTION MARK (DRAWING NUMBER / DRAWING SHEET NUMBER)
- ELEVATION MARK (DRAWING NUMBER / DRAWING SHEET NUMBER)
- DETAIL MARK (DRAWING NUMBER / DRAWING SHEET NUMBER)
- EQUIPMENT DESIGNATION
- GRADE ELEVATION
  - EL. 118.3 EXISTING GRADE ELEVATION
  - (EL. 118.3) PROPOSED GRADE ELEVATION
- EMERGENCY LIGHT
  - 2 BULB EMERGENCY LIGHT WITH BATTERY BACK UP
  - 3 BULB EMERGENCY LIGHT WITH BATTERY BACK UP
  - EXIT SIGN 3 BULB EMERGENCY LIGHT WITH BATTERY BACK UP

ARCHITECT:
MORALI ARCHITECTURE
505 8th AVENUE, SUITE 2202, NEW YORK, NY, 10018
TEL. 212 219 2091 E-MAIL: JMORALI@MORALIARCHITECTURE.COM

IMA ENGINEERING , PC
123-23 82 AVENUE, KEW GARDENS, NY, 11415 TEL: 718 268 8600

ADVANCED CLEANUP TECHNOLOGIES, INC.
110 MAIN STREET, SUITE 103, PORT WASHINGTON, NY, 11050

COPYRIGHT (C)
THESE PLAN ARE AN INSTRUMENT OF SERVICE AND ARE THE PROPERTY OF THE ARCHITECT.
This and all documents produced by this firm under this agreement shall remain the sole property of this firm and may not be used, copied, changed or distributed by the client or others without the written consent of this firm.
INFRINGEMENTS WILL BE PROSECUTED.

CONTRACTOR SHALL VERIFY ALL CONDITIONS AND MEASUREMENTS IN THE FIELD AND BE RESPONSIBLE FOR FIELD FIT AND QUANTITY OF WORK. NO ALLOWANCES SHALL BE MADE IN BEHALF OF THE CONTRACTOR FOR ANY ERROR OR NEGLECT ON HIS PART.

"THIS PLAN IS APPROVED ONLY FOR WORK INDICATED ON THE APPLICATION SPECIFICATION SHEET. ALL OTHER MATTERS SHOWN ARE NOT TO BE RELIED UPON, OR TO BE CONSIDERED AS EITHER BEING APPROVED OR IN ACCORDANCE WITH APPLICABLE CODES."

No.	Description	Date

PROJECT
36-37 31ST STREET
LONG ISLAND CITY, NY
11106

COVER SHEET

SCALE : N.T.S.

SEAL: REGISTERED ARCHITECT ANTHONY J. MORALI STATE OF NEW YORK 031783-1

Date	10.12.15
Project Number	1507
Drawn By	CI
Checked By	AM

T-001.00

Address	36-33 31st street
Borough	Queens
Block & lot	600 & 12
Lot SF	5,643 SF
Lot dimensions	116 ft x 50 ft

Zoning map 9b
Zoning district: M1-2/R6A - M1-2/R5B
Special district: Long Island City Special District
Subdistrict: Dutch Kills Subdistrict

LOT AREA = 5,643 SF LOT AREA BREAKDOWN:AREA A (M1-2/R6A) = 4,496 SF AREA B (M1-2/R5B) = 1,147 SF	
Maximum floor area ratio and lot coverage for Residential uses R6A = 3.0	SECTION ZR 117-631; 123-63; 23-145
(b)Maximum floor area ratio and lot coverage for Residential uses (1)M1-2/R5B designated district The maximum floor area ratio for residential use shall be 1.65 The maximum lot coverage for the residential portion of a building shall be 60 percent on an interior lot or through lot and 80 percent on a corner lot.	SECTION ZR 117-631
THEREFORE: AREA A (M1-2/R6A) = 4,496 SF + 1,129 SF from area B as per section ZR 77-11 = 5,625 SF X 3.0 = 16,875 SF RES AREA B (M1-2/R5B) = 1,147 SF - 1,129 SF to area A as per section ZR 77-11 = 14 X 1.65 = 23 SF RES TOTAL RES ALLOWABLE = 16,875 + 23 = 16,898 SF RES	SECTION ZR 77-11 SECTION ZR 23-145 SECTION ZR 117-631
of the above 16,898 sf, the Maximum floor area ratio Comm base UG 6 = M1-2 (2.0) X 5,643 = 11,286	SECTION ZR 43-12
Proposed FAR RES 14,963 SF < 16,898 SF Proposed FAR COMM UG 6: 1,932 SF < 11,286 SF PROPOSED TOTAL FAR 16,895 SF < 16,898 SF	COMPLIES OK
Maximum number of Dwelling units R6 - 680 (factor for dwelling units) 15,380 sf / 680 = 22.6 Dwelling units Proposed = 22 Dwelling units < 22.6 Dwelling units	SECTION ZR 23-22 COMPLIES OK
Lot coverage regulations as per 23-145 Maximum coverage shall be 65% on an interior or through lot MAX PERMITTED LOT COVERAGE =65% of 5,643 SF = 3,667 SF PROPOSED LOT COVERAGE = 3,440 SF < 3,667 sf	SECTION ZR 23-145 COMPLIES OK
Balconies in R1 through R5 Districts Balconies may, by a distance not to exceed eight feet, project into a #rear yard# or other #open space# not specifically excluded in paragraphs (2) and (3) of this Section. At the level of the second #story#, the aggregate width of such balconies is not limited but at the level of the third #story# or higher such aggregate width shall not exceed 50 percent of the width at that level of the plane surface of the #building# wall from which the balconies project. In addition, balconies may be enclosed by #building# walls provided that at least 33 percent of the perimeter of such balcony is unenclosed except for a parapet not exceeding 3 feet, 8 inches in height, or a railing not less than 50 percent open and not exceeding 4 feet, 6 inches in height. The portion of a balcony enclosed by #building# walls shall not exceed six feet in depth. Plane Surface = 50'-0" Allowable Aggregate Balcony width = 50 x 50% = 25'-0" Proposed Aggregate Balcony width on front facade= 22'-8" 22'-8" < 25'-0" Proposed Aggregate Balcony width on back facade= 24'-11" 24'-11" < 25'-0" Maximum Height of Parapet wall 3'-8" high Proposed Height of Parapet wall 3'-8" high	SECTION ZR 23-131 COMPLIES OK COMPLIES OK
Conditions for Application of Use Regulations to Entire Zoning Lot Whenever a #zoning lot# existing on December 15, 1961, or on any applicable subsequent amendment thereto, is divided by a boundary between districts in which different #uses# are permitted, the #use# regulations applicable to the district in which more than 50 percent of the #lot area# of the #zoning lot# is located may apply to the entire #zoning lot#, provided that the greatest distance from the mapped district boundary to any #lot line# of such #zoning lot# in the district in which less than 50 percent of its area is located does not exceed 25 feet. Such distance shall be measured perpendicular to the mapped district boundary. Whenever the #use# regulations are so applied, the district boundary may be assumed to be relocated accordingly, and the #bulk#, off-street parking and loading, and all other regulations applying to such expanded district shall apply to the entire #zoning lot#.	SECTION ZR 77-11 COMPLIES OK

Street wall location (a)(1) The street wall shall be located no closer to the street line than the closest street wall of an existing building to such street line, located on the same block, and within 150 feet of such building. However, a street wall need not be located further from the street line than 15'-0". Provided: Aligned with closest street wall of adjacent existing building/Street wall Recess aligned with adjacent res building entrance.	SECTION ZR23-633/117-632 COMPLIES OK
Base Height and Setback (b)(1) At a height not lower than the minimum base height or higher than the maximum base height specified in the table in this Section, a set back with a depth of at least 10 feet shall be provided from any street wall fronting on a wide street. As per table Min Base = 40; Max Base = 60 Provided: Max Base 60'-0" = 60'-0"; Setback 10'-0" = 10'-0"	SECTION ZR23-633 COMPLIES OK
Building Height (c)(1) No building or other structure shall exceed the maximum building height specified in the table in this section As per table Max Building height = 70 Provided: Max building height 70'-0" = 70'-0"	SECTION ZR23-633 COMPLIES OK
Parking regulations Residential **In R6 or R7 districts for residences created pursuant to the quality housing program, accessory off street parking spaces shall be provided for at least 50 percent of the total number of such residences. Required 50% of 22 units = 11 parking spaces Provided 12 parking spaces > 11 parking spaces	SECTION ZR25-23 COMPLIES OK
Required Enclosed Bicycle parking Use Group 2 = 1 per 2 dwelling units (22/2 = 11) Provided 14 > 11	SECTION ZR25-811 COMPLIES OK
Special parking regulations Commercial (a) Commercial and community facility uses (1) The accessory off-street parking and loading requirements of a C8-2 District, as set forth in Artivle III, Chapter 6 shall apply 1 per 300 sq ft of floor area (2,700 / 300) = (9) parking spaces	SECTION ZR117-64/36-20
Waiver of requirements for Spaces below Minimum Number The parking requirements set forth in 36-21 or 36-22 shall not apply to commercial uses, or to community facility uses, if the total number of accessory off-street parking spaces required for all such uses on the zoning lot is less than the number of spaces set forth in the table: C8-2 (as per 117-64) = 25 parking spaces Required spaces = 9 < 25 therefore required parking is waived	SECTION ZR36-23 COMPLIES OK
Size of Dwelling units A dwelling unit shall have an area of at least 400 sq ft of floor area Proposed: 400 min sq ft in any dwelling unit	SECTION ZR 28-21 COMPLIES OK

Windows All windows in the residential portion of a development or enlargement shall be double glazed. Proposed: All windows to be double glazed	SECTION ZR 28-22 COMPLIES OK
Refuse Storage and Disposal A refuse disposal room of not less than twelve square feet with no dimension less than three feet shall be provided on each story that has entrances to dwelling units or rooming units. Twelve square feet of such refuse storage room shall be excluded from the definition of floor area Proposed: Refuse disposal room provided at each story	SECTION ZR 28-23 COMPLIES OK
Laundry Facilities Laundry room provided containing: (a) at least one washing machine per 20 dwelling units and one dyer per 40 dwelling units (b) such machines are located in a room with an additional three square feet of unobstructed floor space equipped with chairs and tables for folding laundry for each machine provided	SECTION ZR 28-24 COMPLIES OK
Daylight in Corridors Fifty percent of the square footage of a corridor may be excluded from the definition of floor area if a window with a clear, non tinted, glazed area of at least 20 sq ft is provided in such corridor, provided that such window (a) shall be directly visible from 50 perccent of the corridor from the vertical circulation core, and (b) is located at least 20 feet from a wall or a side or rear lot line measured in a horizontal plane and perpendicular to the rough window opening.	SECTION ZR 28-25 COMPLIES OK
Required Recreation Space Minmimum Required Recreation space (as a percentage of the residential floor area) - R6 district = 3.3% 15,380 sf x 3.3% = 507 SF 1,500 sf exterior recreation rooftop space 1,500 sf > 507 sf	SECTION ZR 28-31 COMPLIES OK
Density per corridor If the number of dwelling units served by a vertical circulation core and corridor on each story does not exceed the number set forth in the following table, 50 percent of the square feet of the corridor serving such dwelling units on each story may be excluded from the definition of floor area. - R6 District = 11 dwelling units Provided = 4 dwelling units Max < 11 dwelling units	SECTION ZR 28-41 COMPLIES OK

ZONING MAP 9B

TAX MAP

Appendix A
Special Long Island City Mixed Use District and Subdistricts Plan Map, including Permitted Sidewalk Cafe Locations

District and Subdistricts

Special Long Island City Mixed Use District
Subdistrict Boundary
Sunnyside Yard
CS Court Square Subdistrict
DK Dutch Kills Subdistrict
QP Queens Plaza Subdistrict
HP Hunters Point Subdistrict

SPECIAL DISTRICT MAP

ARCHITECT:
MORALI ARCHITECT
505 8th AVENUE, SUITE 2202, NEW YORK, NY, 10018
TEL. 212 219 2091 E-MAIL: MSTUDIONY@AOL.COM

IMA ENGINEERING , PC
123-23 82 AVENUE, KEW GARDENS, NY, 11415 TEL: 718 268 8600

ADVANCED CLEANUP TECHNOLOGIES, INC.
110 MAIN STREET, SUITE 103, PORT WASHINGTON, NY, 11050

COPYRIGHT (C)
THESE PLAN ARE AN INSTRUMENT OF SERVICE AND ARE THE PROPERTY OF THE ARCHITECT.
This and all documents produced by this firm under this agreement shall remain the sole property of this firm and may not be used, copied, changed or distributed by the client or others without the written consent of this firm.
INFRINGEMENTS WILL BE PROSECUTED.

CONTRACTOR SHALL VERIFY ALL CONDITIONS AND MEASUREMENTS IN THE FIELD AND BE RESPONSIBLE FOR FIELD FIT AND QUANTITY OF WORK. NO ALLOWANCES SHALL BE MADE IN BEHALF OF THE CONTRACTOR FOR ANY ERROR OR NEGLECT ON HIS PART.

"THIS PLAN IS APPROVED ONLY FOR WORK INDICATED ON THE APPLICATION SPECIFICATION SHEET. ALL OTHER MATTERS SHOWN ARE NOT TO BE RELIED UPON, OR TO BE CONSIDERED AS EITHER BEING APPROVED OR IN ACCORDANCE WITH APPLICABLE CODES."

No.	Description	Date

PROJECT
36-37 31ST STREET
LONG ISLAND CITY, NY
11106

ZONING NOTES & MAPS

SCALE : AS NOTED

SEAL: REGISTERED ARCHITECT ANTHONY J. MORALI 017683-1 STATE OF NEW YORK

Date	10.12.15
Project Number	1507
Drawn By	CI
Checked By	AM

Z-001.00

PAGE # x OF x

Height Regulation ZR-23-633

Min. required set back	**10'-0" on wide street**
Proposed set back	**10'-0" on 31st street (wide)**
Max Base height	**60'-0"**
Proposed Base height	**50'-7"**
Max Building height	**70'-0"**
Proposed Building height	**70'-0"**

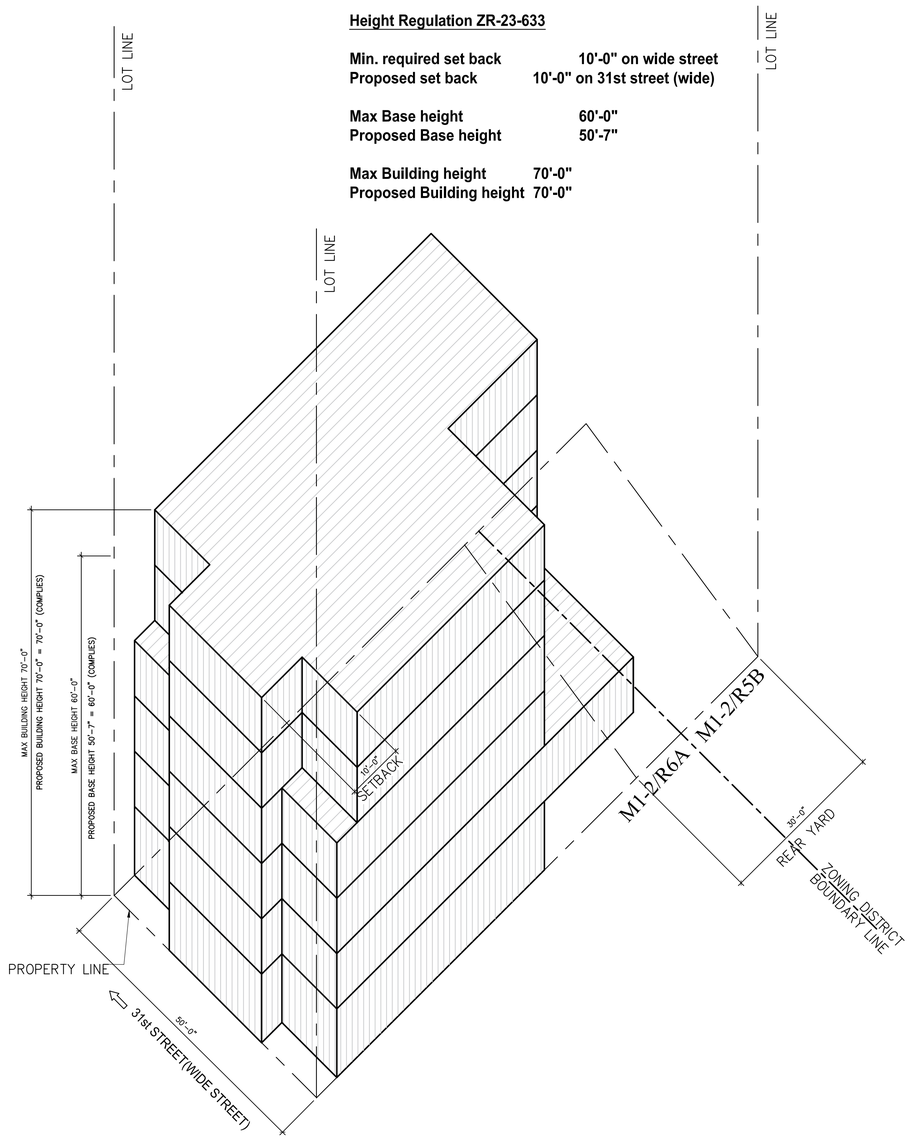

ZONING DIAGRAM

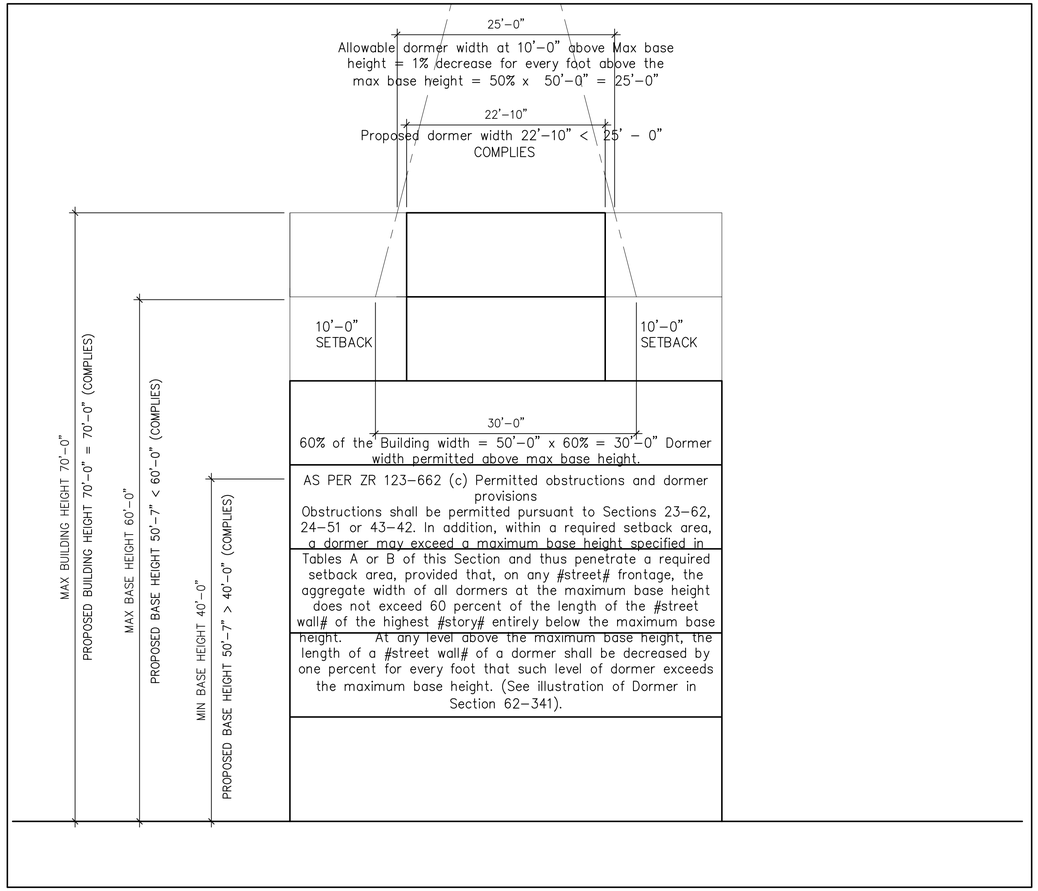

DORMER CALCULATION DIAGRAM

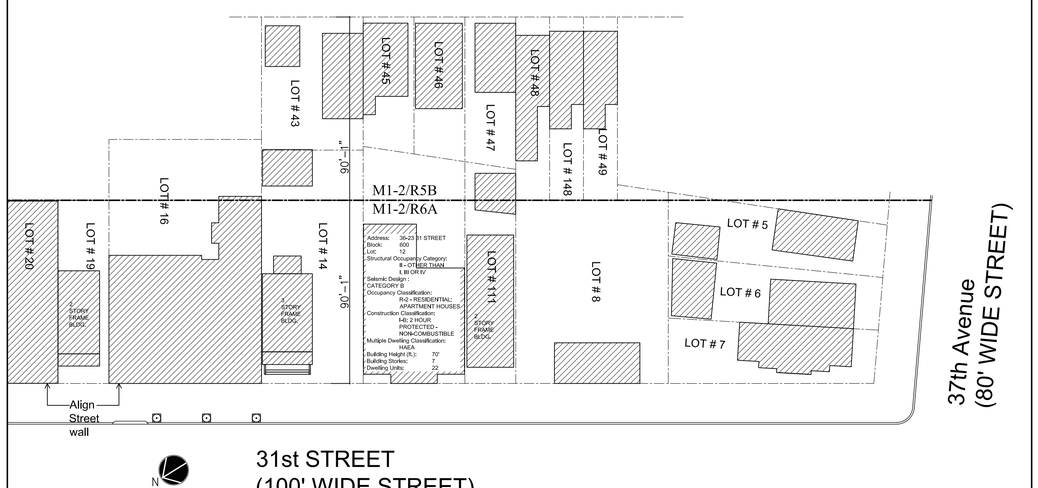

BLOCK DIAGRAM

ARCHITECT:
MORALI ARCHITECT
505 8th AVENUE, SUITE 2202, NEW YORK, NY, 10018
TEL. 212 219 2091 E-MAIL: MSTUDIONY@AOL.COM

IMA ENGINEERING , PC
123-23 82 AVENUE, KEW GARDENS, NY, 11415 TEL: 718 268 8600

ADVANCED CLEANUP TECHNOLOGIES, INC.
110 MAIN STREET, SUITE 103, PORT WASHINGTON, NY, 11050

COPYRIGHT (C)
THESE PLAN ARE AN INSTRUMENT OF SERVICE AND ARE THE PROPERTY OF THE ARCHITECT.
This and all documents produced by this firm under this agreement shall remain the sole property of this firm and may not be used, copied, changed or distributed by the client or others without the written consent of this firm.
INFRINGEMENTS WILL BE PROSECUTED.

CONTRACTOR SHALL VERIFY ALL CONDITIONS AND MEASUREMENTS IN THE FIELD AND BE RESPONSIBLE FOR FIELD FIT AND QUANTITY OF WORK. NO ALLOWANCES SHALL BE MADE IN BEHALF OF THE CONTRACTOR FOR ANY ERROR OR NEGLECT ON HIS PART.

"THIS PLAN IS APPROVED ONLY FOR WORK INDICATED ON THE APPLICATION SPECIFICATION SHEET. ALL OTHER MATTERS SHOWN ARE NOT TO BE RELIED UPON, OR TO BE CONSIDERED AS EITHER BEING APPROVED OR IN ACCORDANCE WITH APPLICABLE CODES."

No.	Description	Date

PROJECT
36-37 31ST STREET
LONG ISLAND CITY, NY
11106

ZONING AXONOMETRIC & DIAGRAMS

SCALE : AS NOTED

REGISTERED ARCHITECT ANTHONY J. MORALI 026932-1 STATE OF NEW YORK

Date	10.12.15
Project Number	1507
Drawn By	CI
Checked By	AM

Z-002.00

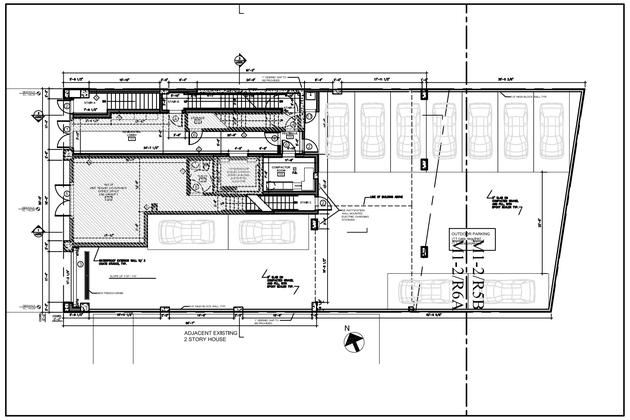

1ST FLOOR

GROSS SF: 1,630 SF ; -(MECHANICAL DEDUCT 409SF) - (CORRIDOR 334SF) = RES ZONING SF: 285 SF + USE GROUP 6: 602 SF
TOTAL ZONING FA = 887 SF

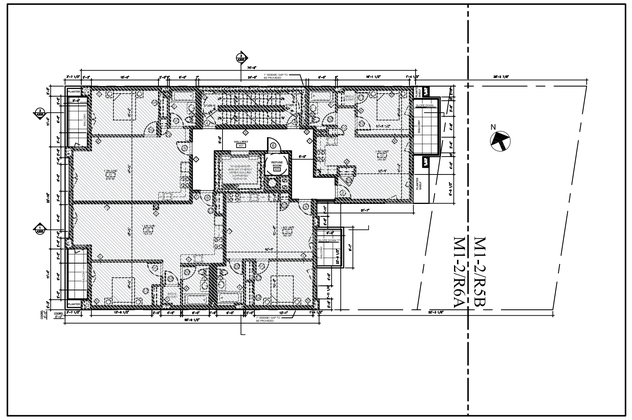

4TH FLOOR

GROSS SF: 3,191 SF ; - (CORRIDOR 285 SF) - (REFUSE 12 SF) - (MECH DEDUCT 178SF) = RES ZONING SF: 2,716SF

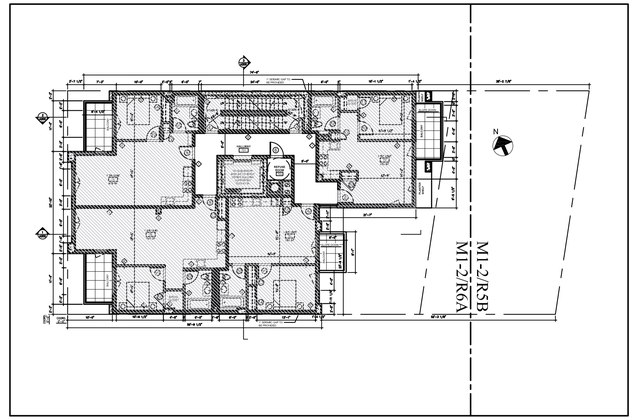

7TH FLOOR

GROSS SF: 3,052 SF ; - (CORRIDOR 285 SF) - (REFUSE 12 SF) - (MECH DEDUCT 175SF) = RES ZONING SF: 2,580SF

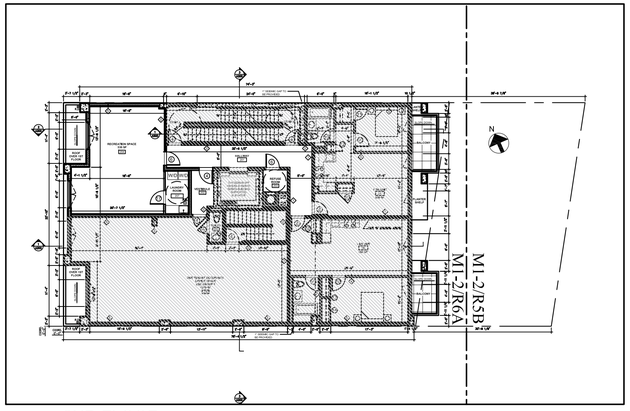

2ND FLOOR

GROSS SF: 3,513 SF ; - (50 % CORRIDOR 142 SF) - (REFUSE 12 SF) - (MECH DEDUCT 148SF) - (LAUNDRY ROOM 70SF) - (RECREATION ROOM 541SF) = RES ZONING SF: 1,370 SF + USE GROUP 6 SF: 1,330 SF = TOTAL ZONING FA = 2,700 SF

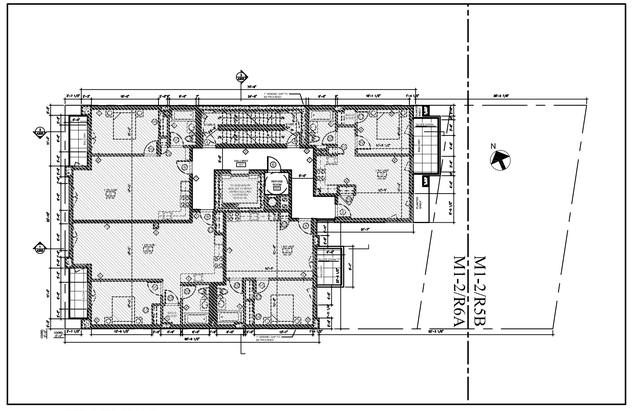

5TH FLOOR

GROSS SF: 3,191 SF ; - (CORRIDOR 285 SF) - (REFUSE 12 SF) - (MECH DEDUCT 178SF) = RES ZONING SF: 2,716SF

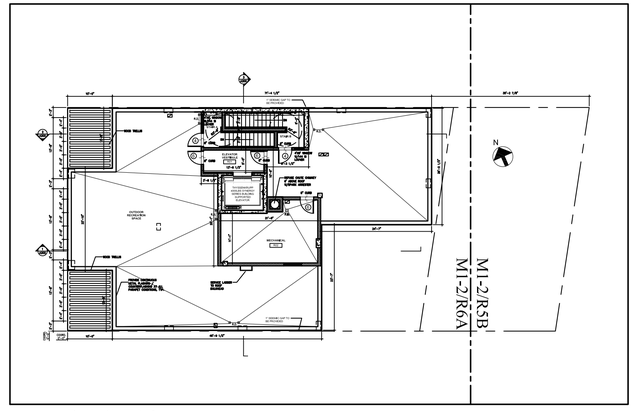

BULKHEAD

GROSS SF: 717 SF ; RES ZONING SF: 0 SF

NOTE: GROSS SF OF ROOF = 717 SF,
GROSS SF OF 7TH FL BELOW = 3,052 SF
717 SF IS 23% OF 3,052 SF 23% < 33%
THEREFORE OK

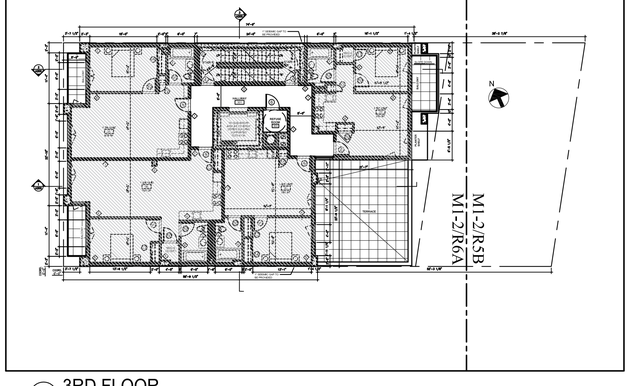

3RD FLOOR

GROSS SF: 3,191 SF ; - (CORRIDOR 285 SF) - (REFUSE 12 SF) - (MECH DEDUCT 178SF) = RES ZONING SF: 2,716SF

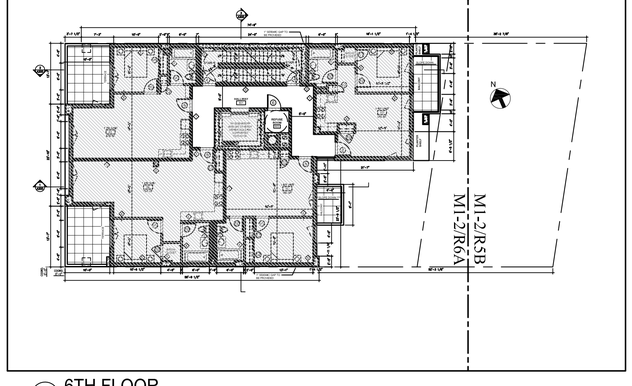

6TH FLOOR

GROSS SF: 3,052 SF ; - (CORRIDOR 285 SF) - (REFUSE 12 SF) - (MECH DEDUCT 175SF) = RES ZONING SF: 2,580SF

TOTAL
RES ZONING

1ST	887
2ND	2,700
3RD	2,816
4TH	2,816
5TH	2,816
6TH	2,680
7TH	2,680
	16,895 SF

ARCHITECT:
MORALI ARCHITECT
505 8th AVENUE, SUITE 2202, NEW YORK, NY, 10018
TEL. 212 219 2091 E-MAIL: MSTUDIONY@AOL.COM

IMA ENGINEERING , PC
123-23 82 AVENUE, KEW GARDENS, NY, 11415 TEL: 718 268 8600

ADVANCED CLEANUP TECHNOLOGIES, INC.
110 MAIN STREET, SUITE 103, PORT WASHINGTON, NY, 11050

COPYRIGHT (C)
THESE PLAN ARE AN INSTRUMENT OF SERVICE AND ARE THE PROPERTY OF THE ARCHITECT.
This and all documents produced by this firm under this agreement shall remain the sole property of this firm and may not be used, copied, changed or distributed by the client or others without the written consent of this firm.
INFRINGEMENTS WILL BE PROSECUTED.

CONTRACTOR SHALL VERIFY ALL CONDITIONS AND MEASUREMENTS IN THE FIELD AND BE RESPONSIBLE FOR FIELD FIT AND QUANTITY OF WORK. NO ALLOWANCES SHALL BE MADE IN BEHALF OF THE CONTRACTOR FOR ANY ERROR OR NEGLECT ON HIS PART.

"THIS PLAN IS APPROVED ONLY FOR WORK INDICATED ON THE APPLICATION SPECIFICATION SHEET. ALL OTHER MATTERS SHOWN ARE NOT TO BE RELIED UPON, OR TO BE CONSIDERED AS EITHER BEING APPROVED OR IN ACCORDANCE WITH APPLICABLE CODES."

No.	Description	Date

PROJECT
36-37 31ST STREET
LONG ISLAND CITY, NY
11106

ZONING FLOOR AREA DIAGRAMS

SCALE : AS NOTED

SEAL

REGISTERED ARCHITECT ANTHONY J. MORALI 019693-1 STATE OF NEW YORK

Date	10.12.15
Project Number	1507
Drawn By	CI
Checked By	AM

Z-003.00

PAGE # x OF x

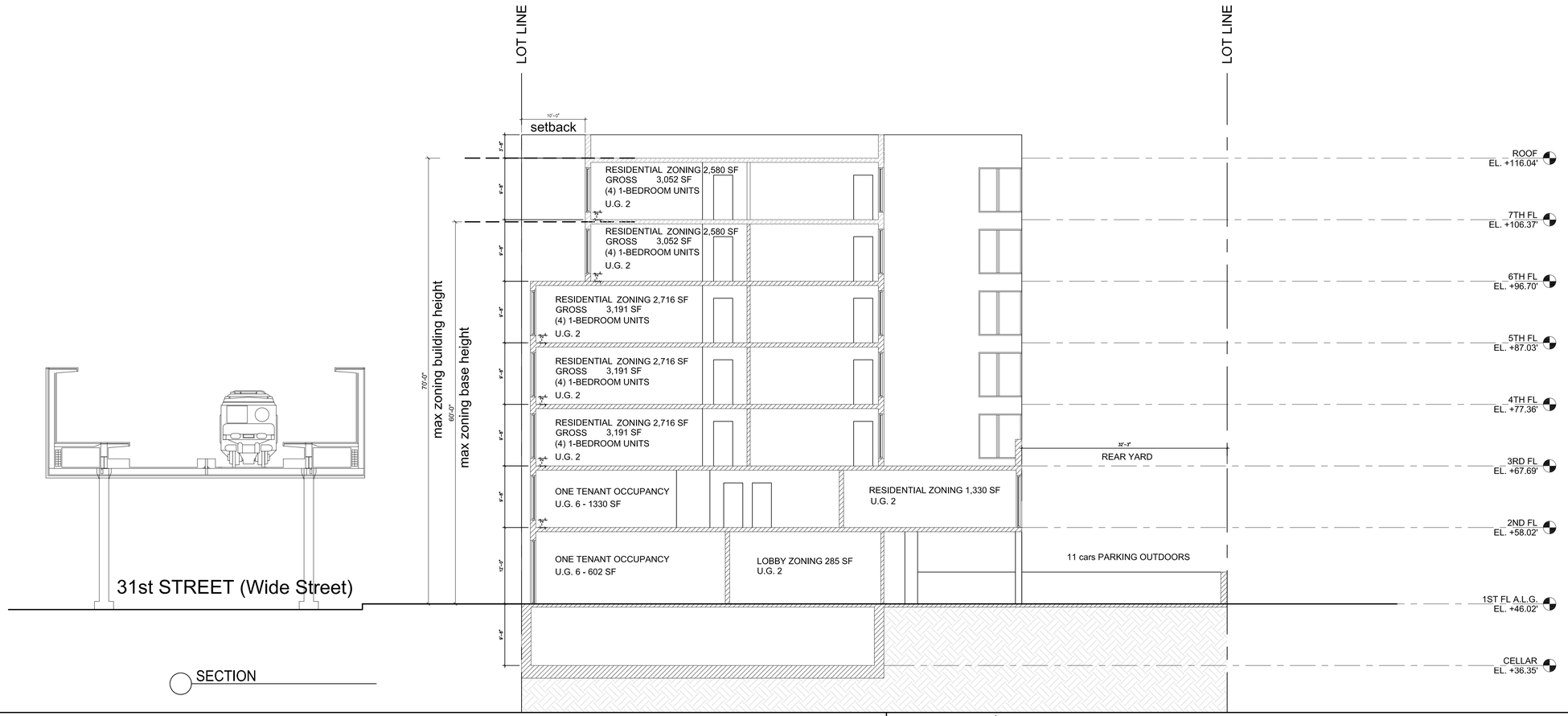

SECTION

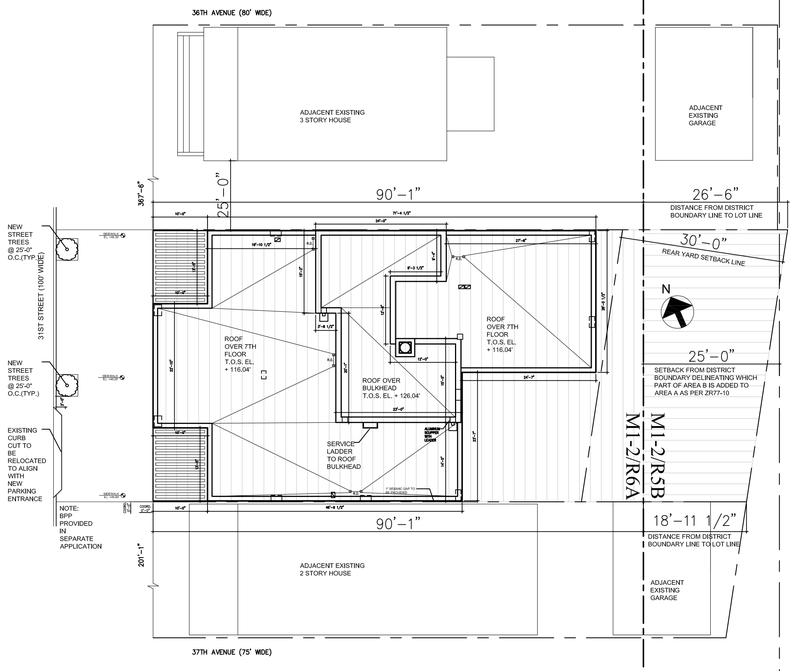

PLOT PLAN

LEGEND:

AREA A = 4,496 SF
M1-2/R6A DISTRICT

AREA B = 1,147 SF
M1-2/R5B DISTRICT

ARCHITECT:
MORALI ARCHITECT
505 8th AVENUE, SUITE 2202, NEW YORK, NY, 10018
TEL. 212 219 2091 E-MAIL: MSTUDIONY@AOL.COM

IMA ENGINEERING , PC
123-23 82 AVENUE, KEW GARDENS, NY, 11415 TEL: 718 268 8600

ADVANCED CLEANUP TECHNOLOGIES, INC.
110 MAIN STREET, SUITE 103, PORT WASHINGTON, NY, 11050

COPYRIGHT (C)
THESE PLAN ARE AN INSTRUMENT OF SERVICE AND ARE THE PROPERTY OF THE ARCHITECT.
This and all documents produced by this firm under this agreement shall remain the sole property of this firm and may not be used, copied, changed or distributed by the client or others without the written consent of this firm.
INFRINGEMENTS WILL BE PROSECUTED.

CONTRACTOR SHALL VERIFY ALL CONDITIONS AND MEASUREMENTS IN THE FIELD AND BE RESPONSIBLE FOR FIELD FIT AND QUANTITY OF WORK. NO ALLOWANCES SHALL BE MADE IN BEHALF OF THE CONTRACTOR FOR ANY ERROR OR NEGLECT ON HIS PART.

"THIS PLAN IS APPROVED ONLY FOR WORK INDICATED ON THE APPLICATION SPECIFICATION SHEET. ALL OTHER MATTERS SHOWN ARE NOT TO BE RELIED UPON, OR TO BE CONSIDERED AS EITHER BEING APPROVED OR IN ACCORDANCE WITH APPLICABLE CODES."

No.	Description	Date

PROJECT

36-37 31ST STREET
LONG ISLAND CITY, NY
11106

ZONING SECTION & PLOT PLAN

SCALE : AS NOTED

SEAL: REGISTERED ARCHITECT ANTHONY J. MORALI STATE OF NEW YORK 017883-1

Date	10.12.15
Project Number	1507
Drawn By	CI
Checked By	AM

Z-004.00

PAGE # x OF x

GENERAL NOTES

SECTION 1 - EXECUTION AND INTENT OF DRAWINGS

1.1 THE CONTRACTOR, BEFORE SUBMITTING A PROPOSAL, SHALL VISIT THE PREMISES FAMILIARIZING HIMSELF AS THE NATURE AND SCOPE OF THE WORK AND DIFFICULTIES THAT ATTEND ITS EXECUTION.

1.2 THE SUBMISSION OF THE PROPOSAL WILL BE CONSTRUCTED AS EVIDENCE THAT SUCH AN EXAMINATION HAS BEEN MADE, AND LATER CLAIMS FOR LABOR, EQUIPMENT OR MATERIALS REQUIRED FOR DIFFICULTIES ENCOUNTERED WHICH COULD HAVE BEEN AVERTED HAD SUCH AN EXAMINATION BEEN MADE, WILL NOT BE RECOGNIZED.

1.3 THE CONTRACTOR SHALL NOTIFY THE ARCHITECT OF ANY DISCREPANCIES BETWEEN THESE DRAWINGS, THESE NOTES, AND CONDITIONS BEFORE COMMENCING ANY WORK OR ORDERING MATERIALS, AND REQUEST CLARIFICATION.

1.4 THE CONTRACTOR SHALL REVIEW THESE DOCUMENTS TO INSURE A FULL UNDERSTANDING OF THE SCOPE OF WORK. THE ARCHITECT OR PROJECT MANAGER SHALL BE AVAILABLE TO REVIEW AND CLARIFY ANY UNCLEAR ITEMS.

1.5 IF ANY UNFORESEEN CONDITIONS ARISE DURING ANY PORTION OF WORK, THE CONTRACTOR SHALL STOP IMMEDIATELY AND NOTIFY THE ARCHITECT AT ONCE.

1.6 THE CONTRACTOR SHALL CHECK AND VERIFY ALL DIMENSIONS AND CONDITIONS AT THE JOB SITE.

1.7 THE GENERAL CONTRACTOR SHALL BE RESPONSIBLE FOR THE OVERALL COORDINATION WITH ALL SUBCONTRACTORS, WHETHER UNDER CONTRACT TO HIM OR NOT.

1.8 WHEN "APPROVAL EQUAL", "EQUAL TO" OR OTHER GENERAL QUALIFYING TERMS ARE USED, IT SHALL BE BASED UPON THE REVIEW AND APPROVAL BY THE ARCHITECT NO MATERIAL SUBSTITUTION SHALL BE MADE WITHOUT FIRST INFORMING THE ARCHITECT. SUBMIT SUBSTITUTE MATERIAL SPECIFICATIONS AND SAMPLES FOR APPROVAL, IN WRITING, PRIOR TO COMMENCEMENTS OF WORK.

1.9 ALL WORK SHOWN ON THE CONSTRUCTION DOCUMENTS SHALL BE FURNISHED AND INSTALLED BY THE GENERAL CONTRACTOR UNLESS NOTED OTHERWISE.

1.10 THE GENERAL CONTRACTOR IS RESPONSIBLE FOR PROTECTION OF WORKMEN, PUBLIC AND PROPERTY.

1.11 ALL REQUIRED EXITS AND EXIT APPROACHES SHALL BE CONTINUOUSLY MAINTAINED FREE OF OBSTRUCTIONS THROUGHOUT THE CONSTRUCTION.

1.12 DURING THE ENTIRE CONSTRUCTION PERIOD, ALL EXISTING LIGHTING, FIRE PROTECTION DEVICES AND ALARMS SHALL BE CONTINUOUSLY MAINTAINED.

1.13 THE GENERAL CONTRACTOR SHALL BE RESPONSIBLE FOR COORDINATION OF CHOPPING AND PATCHING FOR ALL TRADES. ALL CONDUITS, PIPING, BACKBOXES, ETC. SHALL BE CONCEALED WITHIN BUILDING CONSTRUCTION.

1.14 BEFORE WORK COMMENCES THE ARCHITECT IS TO APPROVE ALL LAYOUTS.

1.15 WHERE DRAWINGS CALL FOR A SPECIFIC MANUFACTURER TO SUBCONTRACTOR, THE GENERAL CONTRACTOR SHALL BE OBLIGATED TO USE THESE MANUFACTURERS OR SUBCONTRACTORS. THE GENERAL CONTRACTORS SHALL FURNISH A LIST OF SUB-CONTRACTORS AND MANUFACTURERS HE INTENDS TO USE BEFORE WORK COMMENCES.

1.16 DRAWINGS SHALL NOT BE SCALED, LARGER SCALE DRAWINGS SHALL ALWAYS GOVERN OVER SMALLER SCALE DRAWINGS.

1.17 THE A.I.A. GENERAL CONDITIONS, LATEST EDITION, SHALL BE BINDING ON THE WORK.

SECTION 2 - GOVERNING AGENCIES AND PERMITS

2.1 THE GENERAL CONTRACTOR SHALL BE RESPONSIBLE TO OBTAIN ALL NECESSARY BUILDING PERMITS AND FOR SCHEDULING BUILDING DEPARTMENT INSPECTIONS, PROVIDING CONTROLLED INSPECTIONS OBTAINING CERTIFICATE OF OCCUPANCY AMENDED AS REQUIRED. THE G.C. SHALL BEAR THE COSTS OF ALL THE ABOVE ITEMS.

2.2 THE GENERAL CONTRACTOR SHALL COMPLY WITH ALL APPROPRIATE MUNICIPAL AND REGULATORY AGENCIES' CODES HAVING JURISDICTION.

2.3 ALL MATERIALS, ASSEMBLIES, CONSTRUCTION AND EQUIPMENT SHALL CONFORM TO ALL GOVERNING BUILDING CODES; FEDERAL, STATE, AND LOCAL AND SHALL CONFORM TO GENERALLY ACCEPTED STANDARDS.

2.4 ALL WOOD SHALL BE FIRE-PROOFED AS REQUIRED BY THE BUILDING CODE.

2.5 IF THE CONTRACTORS VIOLATE ANY BUILDING DEPARTMENT CODES OR REGULATIONS, HE SHALL AT HIS OWN EXPENSES BEAR THE COSTS OF ALL PENALTIES AND CORRECTIVE MEASURES, AND HOLD HARMLESS THE OWNER AGAINST ANY DAMAGES WHICH MAY RESULT FROM SUCH VIOLATIONS.

SECTION 3 - INSURANCES

3.1 NO WORK SHALL COMMENCE UNTIL PROPER CERTIFICATES OF INSURANCE AS REQUIRED BY THE GOVERNING JURISDICTION ARE SUBMITTED TO THE OWNER AND DEPARTMENT OF BUILDINGS.

SECTION 4 - WORKMANSHIP

4.1 THE GENERAL CONTRACTOR SHALL GUARANTEE ALL MATERIALS AND WORKMANSHIP AGAINST DEFECTS FOR ONE YEAR FROM FINAL PAYMENT AND MAKE GOOD ALL SUCH DEFECTS APPEARING DURING THIS PERIOD GUARANTEED.

4.2 ANY PATCHING AND FINISHING NECESSARY TO FINISH ANY WORK, BUT CALLED OUT ON THESE DRAWINGS, IS CONSIDERED TO BE WITHIN THE SCOPE OF THE WORK.

4.3 THE GENERAL CONTRACTOR SHALL CONTROL CLEANING TO PREVENT DIRT AND DUST FROM LEAVING THE JOB SITE AND INFILTRATING AREAS NOT INVOLVED IN THE PROJECT.

4.4 ALL WALL SHALL BE PROPERLY PREPARED (SPACKLED, SANDED, ETC.) FOR PAINTING OR WALL COVERING AS PER MANUFACTURER'S SPECIFICATIONS.

4.5 ALL WORK SHALL BE PERFORMED IN A FIRST CLASS MANNER AND IN ACCORDANCE WITH BEST PRACTICES WITH FIRST CLASS MATERIALS.

4.6 THE GENERAL CONTRACTOR WARRANTS THAT NONE BUT EXPERIENCED WORKMAN SHALL BE EMPLOYED ON THE PROJECT.

4.7 NO INTERIOR WORK OR MATERIAL SHALL BE ACCEPTED ON THIS PROJECT, WHETHER THEY ARE DISCOVERED AT THE TIME OF INSTALLATION OR AFTERWARDS; THIS WORK MUST BE REMOVED AND MADE CORRECT IMMEDIATELY.

4.8 ANY SUBSTITUTION THE GENERAL CONTRACTOR WISHES TO MAKE OTHER THAN THOSE STATED IN THIS PROPOSAL, SHALL BE SUBMITTED IN WRITING WITH THE COST DIFFERENCE BEFORE IT IS ACCEPTED.

4.9 THE GENERAL CONTRACTOR, AT HIS OWN EXPENSE, SHALL EMPLOY A COMPETENT, FULLTIME SUPERINTENDENT TO SUPERVISE AND COORDINATE THE WORK OF HIS OWN MEN AND SUBCONTRACTORS.

SECTION 5 - SHOP DRAWINGS

5.1 THE GENERAL CONTRACTOR SHALL SUBMIT SHOP DRAWINGS OF ONE REPRODUCIBLE AND THREE BLACK AND WHITE PRINTS FOR ALL SHOP FABRICATED ITEMS AND ALL OTHER ITEMS REQUIRED FOR APPROVAL.

5.2 THE GENERAL CONTRACTOR SHALL SUBMIT CUTS OF ALL FIXTURES, EQUIPMENT AND FINISHES FOR APPROVAL.

5.3 BY APPROVING AND SUBMITTING SHOP DRAWINGS AND SAMPLES THE GENERAL CONTRACTOR REPRESENTS THAT HE HAS VERIFIED FIELD MEASUREMENTS AND CONDITIONS RELATED TO THE CONSTRUCTION OF THAT SUBMISSION.

5.4 THE GENERAL CONTRACTOR SHALL NOT BE RELIEVED OF RESPONSIBILITY FOR ANY DEVIATIONS, ERRORS OR OMISSIONS FROM THE REQUIREMENTS OF THE CONTRACT DOCUMENTS BY THE APPROVAL OF SHOP DRAWINGS OR CUTS OR SAMPLE.

SECTION 6 - CHANGE ORDERS AND FIELD ORDERS

6.1 THE OWNER WITHOUT INVALIDATING THE CONTRACT, MAY ORDER EXTRA WORK OR MAKE CHANGES BY ALTERING, ADDING OR DEDUCTING FROM THE WORK. THE CONTRACT SUM WILL BE ADJUSTED ACCORDINGLY. ALL SUCH WORK SHALL BE EXECUTED UNDER THE CONDITIONS OF THE ORIGINAL CONTRACT EXCEPT THAT ANY CLAIM FOR EXTENSIONS OF THE TIME CAUSED THEREBY SHALL BE ADJUSTED AT THE TIME OF ORDERING SUCH CHANGE.

6.2 NO EXTRAS WILL BE PERMITTED UNLESS SUBMITTED IN WRITING BY THE GENERAL CONTRACTOR TO OWNER AND MUST INCLUDE THE FOLLOWING INFORMATION:

- DATE AND CHANGE ORDER NUMBER.
- THE LOCATION AND COMPLETE DESCRIPTION OF THE WORK TO BE PERFORMED.
- THE CHANGE ORDER COST INCLUDING A COMPLETE BREAKDOWN SO THAT AN EVALUATION OF THE CHANGE ORDER CAN BE MADE.
- TIME SCHEDULE OF WORK TO BE DONE AND CONFORMATION THAT IT SHALL NOT IMPACT THE PROJECT COMPLETION DATE.

SECTION 7 - CUTTING AND PATCHING

7.1 THE GENERAL CONTRACTOR SHALL DO ALL CUTTING AND PATCHING REQUIRED FOR ALL SUBCONTRACTORS TO COMPLETE THEIR WORK.

7.2 ALL PENETRATION THROUGH FIRE PARTITIONS SHALL BE FIRESTOPPED OR FILLED WITH NONCOMBUSTIBLE MATERIALS TO PREVENT THE PASSAGE OF FLAME, SMOKE, FUMES AND HOT GASSES. FLAMMABLE MATERIALS ARE NOT PERMITTED AS INSULATION OF FILL.

7.3 ALL EXISTING VALVES AND CONTROLS FOR MECHANICAL EQUIPMENT ARE TO BE KEPT CLEAN AND READY FOR ACCESS. ANY POSSIBLE CONSTRUCTION INTERFERENCE THAT WOULD PREVENT ACCESS IS TO BE BROUGHT TO THE ATTENTION OF M/G.

As per the provisions of 2702.2 of the 2014 Building code, the proposed building is an R-2 Occupancy and not a highrise building therefore does not require an emergency generator.

SECTION 8 - PROTECTION OF WORK AND PROPERTY

8.1 THE GENERAL CONTRACTOR SHALL PROTECT AND BE RESPONSIBLE FOR THE EXISTING STRUCTURES, FACILITIES AND IMPROVEMENT ADJOINING THE AREA UNDER THIS CONTRACT, ANY DISTURBANCES FROM THE G.C.'S OPERATIONS SHALL BE PROMPTLY RESTORED.

8.2 THE G.C. SHALL BE RESPONSIBLE FOR THE SECURITY OF THE CONSTRUCTION AREAS UNTIL THE SPACE IS TURNED OVER TO THE OWNER.

8.3 THE G.C. SHALL REMOVE ALL RUBBISH AND WASTE MATERIALS FROM BOTH HIS EMPLOYEE AND OTHER SUBCONTRACTORS.

SECTION 9 - SUBSTANTIAL COMPLETION

9.1 SUBSTANTIAL COMPLETION OF THE WORK IS DEFINED AS THE DATE CERTIFIED BY THE OWNER WHEN CONSTRUCTION IS SUFFICIENTLY COMPLETE, IN ACCORDANCE WITH THE CONTRACT DOCUMENTS, SO THAT THE OWNER CAN OCCUPY THE AREA FOR THE PURPOSE FOR WHICH IT WAS INTENDED.

9.2 WHEN THE G.C. CONSIDERS THAT THE WORK IS ACCEPTABLE HE SHOULD NOTIFY THE ARCHITECT TO CONDUCT A PUNCH LIST. UPON VERIFICATION THAT THE WORK IS SUBSTANTIALLY COMPLETE.

9.3 BEFORE FINAL PAYMENT IS ISSUED THE FOLLOWING ITEMS MUST BE SUBMITTED BUT NOT LIMITED TO THESE ITEMS:

- WAIVER OF LIENS.
- ALL WARRANTIES AND GUARANTEES.
- MANUALS AND INSTRUCTIONS.
- ELECTRICAL PANELS TAGGED AND LABELED.

SECTION 10 - ASBESTOS

10.1 IF THE CONTRACTOR ENCOUNTERS ASBESTOS HE SHALL NOTIFY THE OWNER'S PROJECT MANAGER IMMEDIATELY AND TAKE PRECAUTIONS TO NOT DISTURB THE ASBESTOS UNTIL PROPER MEASURES FOR ITS REMOVAL HAVE BEEN MADE.

SECTION 11 - SITE SAFETY

PRIOR TO CONSTRUCTION, CONTRACTOR IS TO SUBMIT SITE SAFETY PROGRAM MANUAL AND SITE SAFETY PLAN.

SITE SAFETY PLAN DIAGRAMS AT A MINIMUM SHALL INCLUDE THE FOLLOWINGS:

1 LOCATION OF CONSTRUCTION FENCE
2 LOCATION OF ALL GATES IN FENCE
3 LOCATION OF GUARDRAIL AROUND EXCAVATION
4 HORIZONTAL AND VERTICAL NETTING, INCLUDING DETAILS OF INITIAL INSTALLATION, DESIGNATED CRANE AND LIFTING AREAS WHERE NETTING IS OMITTED
5 SIDEWALK SHEDS
6 TEMPORARY WALKWAYS
7 FOOT BRIDGES AND VEHICLE RAMPS
8 PROTECTION OF SITE EXCAVATION
9 LOCATION OF STREET AND SIDEWALK CLOSING
10 MATERIALS AND PERSONNEL HOIST AND LOADING
11 CRANE AND DERRICK LOADING AREA
12 LOCATION OF SURROUNDING BUILDINGS, ROOT PROTECTION
13 LOCATION OF STANDPIPE SIAMESE CONNECTIONS
14 LOCATION OF TEMPORARY ELEVATORS FOR FIRE DEPT.(75.00' HIGHER)
15 LOCATION OF CONTRACTORS SHED
16 SAFETY NETTING AND SCAFFOLDING
17 SIDEWALKS AND ROADWAY WIDTHS
18 SPECIAL CASE CONSTRUCTIONS

THE MANUAL SHALL INDICATE THE CONSTRUCTION MANAGER, SITE SAFETY MANAGER AND ALTERNATE SITE SAFETY MANAGER

SECTION BC 1207
SOUND TRANSMISSION

1207.3.1 Refuse chutes.
Metal refuse chutes, metal chute supports, and/or metal chute bracing shall be free of direct contact with the shaft enclosure and the openings provided in the floor construction. Metal chutes shall be resiliently supported at each structural support location. Isolators shall provide a minimum static deflection of 0.3 inches (7.62 mm). All chutes shall be plumb.

SECTION BC 1213
REFUSE AND RECYCLABLE STORAGE

1213.
2 Compactor.
A refuse compacting system shall be provided in multiple dwellings in a Group I-1 or R-2 occupancy that are four or more stories in height and contain 12 or more dwelling units, and in buildings of any size occupied as a Group R-1 multiple dwelling. Such system shall be located within a refuse storage room constructed in accordance with Section 1213.1 or in a refuse chute termination room constructed in accordance with Section 707.13.4. The floor within such room shall be constructed of concrete and shall be sloped to a floor drain connected to the building sewer. A hose connection shall be provided within such room.
1213.3 Refuse chute.
A multiple dwelling that is five or more stories in height and that contains more than 9 or more dwelling units shall be provided with a refuse chute, refuse chute access rooms, and refuse chute termination room constructed in accordance with Section 707.13.
A minimum of 5 square feet (0.470 m2) of floor area within each refuse chute access room shall be provided for the temporary holding of recyclables. Such floor area shall be clearly identified on the construction documents. In I-1 and R-1 occupancies, access to the chute access room shall be permitted to be restricted to employees provided that separate refuse storage rooms are located on each story for general occupant use.
Exceptions:
1.In buildings without an elevator, floor area within refuse chute access rooms for the temporary holding of recyclables is not required.
2.In buildings equipped with separate chutes designated for refuse, for paper and cardboard, and for metal, glass and plastic, and in buildings equipped with a chute system that provides for source separation of recyclable materials without cross contamination, floor area within refuse chute access rooms for the temporary holding of recyclables is not required. Chutes for designated recyclable materials shall be constructed in accordance with Section 707.13 of this code.
3.The refuse chute and the occupant use storage rooms shall not be required in transient hotels meeting the following requirements:
3.1.the refuse is removed from rooms by a daily cleaning service, with the staff using a service elevator that is not accessed by hotel guests;
3.2.the building is of Group I or Group II construction; or
3.3.a compactor and refuse storage room is provided in accordance with Section 1213.2.
1213.3.1 Refuse chute access room floor and wall base finish materials.
Refuse chute access rooms shall have a smooth, hard and nonabsorbent surface. The intersection of such floors with walls shall have a smooth, hard and nonabsorbent vertical base that extends upward onto the walls at least 4 inches (101.6 mm).

ARCHITECTURAL ABBREVIATIONS

∠	ANGLE
ø	DIAMETER
#	POUNDS
#-	NUMBER
C	CHANNEL
℄	CENTER LINE
@	AT
AB	ANCHOR BOLTS
A/C	AIR CONDITIONING
ACT	ACTUAL/ACOUSTICAL CEILING TILE
ACU	AIR CONDITIONING UNIT
ADJ	ADJUSTABLE/ADJACENT
ADD'L	ADDITIONAL
ADD'N	ADDITION
AFF	ABOVE FINISHED FLOOR
AGGR	AGGREGATE
AHU	AIR HANDLING UNIT
ALUM	ALUMINUM
ALT	ALTERNATE
ANOD	ANODIZED
APPL	APPLIED
APPROX	APPROXIMATE/APPROXIMATELY
ARCH	ARCHITECTURAL
ASPH	ASPHALT
AVG	AVERAGE
B/	BOTTOM OF
BD	BOARD
BTU	BRITISH THERMAL UNIT
BITUM	BITUMINOUS
BLDG	BUILDING
BLK	BLOCK/BLACK
BLK'G	BLOCKING
BM	BEAM/BENCH MARK
BOF	BOTTOM OF FOOTING
BOT	BOTTOM
BRG	BEARING
BRK	BRICK
BRKT	BRACKET
BSMT	BASEMENT
BUR	BUILT-UP ROOF (ING)
CAB	CABINET
CB	CATCH BASIN/CIRCUIT BREAKER
CC	CENTER TO CENTER
CFI	CONTRACTOR FURNISH AND INSTALL
CFM	CUBIC FEET PER MINUTE
CG	CORNER GUARD
CHWR	CHILLED WATER RETURN
CHWS	CHILLED WATER SUPPLY
CIP	CAST IN PLACE
CJ	CONTROL JOINT
CLG	CEILING
CLO	CLOSET
CLR	CLEAR
CMU	CONCRETE MASONRY UNIT
CND	CONDUIT
CNTR	COUNTER
CO	CLEAN OUT
COL	COLUMN
COMB	COMBINE/COMBINATION
COMP	COMPACT/COMPACTED
COMPR	COMPRESS/COMPRESSED
CONC	CONCRETE
CONN	CONNECT/CONNECTION
CONST	CONSTRUCTION
CONT	CONTINUOUS
COR	CORNER
CORR	CORRIDOR
CPT	CARPET
CRS	COURSE/COURSES
CT	CERAMIC TILE/COMPUTERIZED TOMO..
CTL	CONTROL
CTR	CENTER
CW	COLD WATER
CWR	COLD WATER RETURN
CU	CUBIC
DBT	DRY BULB TEMPERATURE
DB	DECIBEL
DP	DEEP/DEPTH
DCLC	D.C. LIGHTING CONTROLLER
DEMO	DEMOLITION
DEPT	DEPARTMENT
DH	DOUBLE HUNG
DIA	DIAMETER
DIAG	DIAGONAL
DIM	DIMENSION
DIV	DIVISION
DL	DEAD LOAD
DN	DOWN
DO	DITTO
DR	DOOR
DS	DOWN SPOUT
DTL	DETAIL
DWG	DRAWING
E	EAST
EA	EACH
EAT	ENTERING AIR TEMERATURE
EC	CLECTRICAL CONTRACTOR
EE	EACH END
EF	EXHAUST FAN/EACH FACE
EFF	EFFICIENCY
EJ	EXPANSION JOINT
ELEC	ELECTRICAL
EL/ELEV	ELEVATION
EMBED	EMBEDMENT
EMERG	EMERGENCY
ENCL	ENCLOSE/ENCLOSURE
ENG'R	ENGINEER
ENT	ENTRY/ENTRANCE
EQ	EQUAL
EQUIP	EQUIPMENT
EST	ESTIMATED
ETR	EXISTING TO REMAIN
EW	EACH WAY
EWC	ELECTRIC WATER COOLER
EWT	ENTERING WATER TEMPERATURE
EX	EXISTING
EXC	EXCAVATE
EXH	EXHAUST
EXP	EXPANSION
EXT	EXTERIOR
F	FAHRENHEIT
FB	FACE BRICK
FC	FAN COIL UNIT
FCO	FLOOR CLEAN OUT
FD	FLOOR DRAIN
FDN	FOUNDATION
FM	FIELD MEASURED
FEC	FIRE EXTINGUISHER CABINET
FIN	FINISH
FLR	FLOOR
FLUOR	FLUORESCENT
FOC	FACE OF CONCRETE
FOM	FACE OF MASONRY
FPM	FEET PER MINUTE
FT	FIRE TREATED/FOOT/FEET
FTG	FOOTING
FUT	FUTURE
FV	FLUSH VALVE/FIELD VERIFY
GA	GAUGE
GAL	GALLON
GALV	GALVANIZED
GCC	GENERAL CONSTRUCT. CONTRACTOR
GL	GLASS
GWB	GYPSUM WALLBOARD
GPM	GALLONS PER MINUTE
H	HIGH
HB	HOSE BIB
HC	HOLLOW CORE
HCWD	HOLLOW CORE WOOD
HD	HEAD
HDCP	HANDICAPPED
HDR	HEADER
HDWD	HARDWOOD
HGT	HEIGHT
HM	HOLLOW METAL
HORIZ	HORIZONTAL
HP	HORSE POWER
HV	HEATING & VENTILATING
HVAC	HEAT'G.VENTILANT'G & AIR CONDIT'G
HW	HOT WATER
HWR	HOT WATER RETURN
ID	INSIDE DIAMETER
IE	INVERT ELEVATION
IF	INSIDE FACE
IN	INCH
INCL	INCLUDE
INFO	INFORMATION
INSUL	INSULATION
INT	INTERIOR
INV	INVERT
JAN	JANITOR
JB	JUNCTION BOX
JC	JANITOR'S CLOSET
JST	JOIST
JT	JOINT
K	KIPS
KSI	KIPS PER SQUARE INCH
KW	KILOWATTS
KWH	KILOWATT HOUR
LAB	LABORATORY
LAM	LAMINATE/LAMINATED
LAT	LEAVING AIR TEMPERATURE
LAV	LAVATORY
LB	POUNDS
LG	LONG
LH	LEFT HAND
LKR	LOCKER
LL	LEAD LINED/LIVE LOAD
LOG	LOGARITHM
LPS	LOW PRESSURE STEAM
LT	LIGHT
LTG	LIGHTING
LTWT	LIGHTWEIGHT
LWT	LEAVING WATER TEMPERATURE
M	MEN
MBH	1000 BTU'S PER HOUR
MSC	MAGNETIC SHEILD CONTRACTOR
MAS	MASONRY
MAT'L	MATERIAL
MAX	MAXIMUM
MC	MECHANICAL CONTRACTOR
MDP	MAIN DISTRIBUTION PANEL
MECH	MECHANICAL
MEMB	MEMBRANE
MFR	MANUFACTURER
MH	MANHOLE
MIN	MINIMUM
MIR	MIRROR
MISC	MISCELLANEOUS
MM	MILLIMETER
MO	MASONRY OPENING
MRI	MAGNETIC RESONANCE IMAGING
MTL	METAL
N	NORTH
NA	NOT APPLICABLE
NAT	NATURAL
NC	NURSE CALL
NIC	NOT IN CONTRACT
NO	NUMBER
NOM	NOMINAL
NS	NON-SHRINK
NTS	NOT TO SCALE
O	OXYGEN
OA	OUTSIDE AIR/OVER ALL
OC	ON CENTER
OD	OUTSIDE DIAMETER
OFCI	OWNER FURN.,CONTRACTOR INSTALL
OFI	OWNER FURNISH AND INSTALL
OH	OVERHEAD
OPHD	OPPOSITE HAND
OPG	OPENING
OPP	OPPOSITE
OSD	OPEN SITE DRAIN
OZ	OUNCE
PA	PROJECT ARCHITECT/PUBLIC ADDRESS
PC	PRECAST CONCP.LUMBG CONTRACTOR
PCF	POUNDS PER CUBIC FEET
PCS	PIECES
PD	PRESSURE DROP
PERF	PERFORATED
PERIM	PERIMETER
PH	PHASE
PL	PLATE
PL	PROPERTY LINE/PLASTIC LAMINATE
PLBG	PLUMBING
PLWD	PLYWOOD
PM	PROJECT MANAGER
PNL	PANEL
POL	POLISHED
PPM	PARTS PER MILLION
PT	PRESSURE TREATED
PR	PAIR
PREFAB	PREFABRICATED
PREFIN	PREFINISHED
PRELIM	PRELIMINARY
PRESS	PRESSURE
PRKG	PARKING
PROJ	PROJECT/PROJECTION
PROP	PROPERTY
PART	PARTITION
PSF	POUNDS PER SQUARE FOOT
PSI	POUNDS PER SQUARE INCH
PSIA	PSI ABSOLUTE
PSIG	PSI GAUGE
PTD	PAINTED
PVC	POLYVINYL CHLORIDE
PVMT	PAVEMENT
PWR	POWER
QT	QUARRY TILE
R	RISER/RADIUS
RA	RETURN AIR
RAD	RADIOLOGY
RC	ROOF CONDUCTOR
RCP	REFLECTED CEILING PLAN
RD	ROOF DRAIN
REBAR	REINFORCING BAR
REC	RECESSED/RECEPTACLE
RECT	RECTANGLE/RECTANGULAR
REF	REFRIGERATOR/REFERENCE
REINF	REINFORCING
RELOC	RELOCATE/RELOCATED
REM	REMOVE
REQ'D	REQUIRED
RESIL	RESILIENT
RET	RETURN
REV	REVERSE/REVISION
RFSC	RADIO FREQUENCY SHEILD CONTRACTOR
R&F	RADIOGRAPHIC & FLUOROSCOPIC
RFG	ROOFING
RH	RELATIVE HUMIDITY/RIGHT HAND
RI	ROUGH-IN
RM	ROOM
RO	ROUGH OPENING
ROW	RIGHT OF WAY
RPM	REVOLUTIONS PER MINUTE
RTU	ROOF TOP UNIT
S	SOUTH
SA	SUPPLY AIR
SAN	SANITARY
SC	SOLID CORE
SCHED	SCHEDULE
SCWD	SOLID CORE WOOD DOOR
SECT	SECTION
SERV	SERVICE
SF	SQUARE FOOT
SGL	SINGLE
SH	SHELF
SHT	SHEET
SHT'G	SHEATHING
SIM	SIMILAR
SM	SMOOTHSMALL
SP	SOIL PIPE
SPEC	SPECIFICATION
SPKR	SPEAKER
SPR	SPRINKLER
SQ	SQUARE
SS	STAINLESS STEEL
STM	STORM SEWER
STA	STATION
STD	STANDARD
STL	STEEL
STOR	STORAGE
STRUCT	STRUCTURE/STRUCTURAL
SUSP	SUSPENDED
S&V	STAIN & VARNISH
SW	SWITCH
SWR	SEWER
SYM	SYMMETRICAL
SYS	SYSTEM
T	THREAD
T/	TOP OF
TOB	TOP OF BEAM
T&B	TOP & BOTTOM
T/C	TOP OF CURB
TEL	TELEPHONE
TEMP	TEMPORARY/TEMPERATURE/TEMPERED
TERR	TERRAZZO
T&G	TONGUE & GROOVE
THK	THICK
TLT	TOILET
TOL	TOLERANCE
TOS	TOP OF STEEL/TOP OF SLAB
TRANS	TRANSFORMER
TS	TUBULAR STEEL
T-STAT	THERMOSTAT
T & S	TEMPERATURE & SHRINKAGE
TYP	TYPICAL
UCD	UNDER-CUT DOOR
UNEXC	UNEXCAVATED
UNFIN	UNFINISHED
UON	UNLESS OTHERWISE NOTED
UTIL	UTILITY
V	VOLT
VA	VOLT AMPERE
VAC	VACUUM
VAR	VARIES/VARIABLE
VAV	VARIABLE AIR VOLUME
VB	VAPOR BARRIER
VCT	VINYL COMPOSITION TILE
VEL	VELOCITY
VENT	VENTILATOR
VERT	VERTICAL
VOL	VOLUME
VWC	VINYL WALL COVERING
VVT	VARIABLE VOLUME & TEMPERATURE
W	WOMEN/WEST/WIDE/WATT
W/	WITH
W/O	WITHOUT
WC	WATER CLOSET
WD	WOOD
WDW	WINDOW
WG	WIRE GLASS
WH	WALL HUNG
WP	WASTE PIPE
WR	WATER RESISTANT
WT	WEIGHT
WWF	WELDED WIRE FABRIC
YD	YARD

ARCHITECT:
MORALI ARCHITECTURE
505 8th AVENUE, SUITE 2202, NEW YORK, NY, 10018
TEL. 212 219 2091 E-MAIL: JMORALI@MORALIARCHITECTURE.COM

IMA ENGINEERING , PC
123-23 82 AVENUE, KEW GARDENS, NY, 11415 TEL: 718 268 8600

ADVANCED CLEANUP TECHNOLOGIES, INC.
110 MAIN STREET, SUITE 103, PORT WASHINGTON, NY, 11050

COPYRIGHT (C)
THESE PLAN ARE AN INSTRUMENT OF SERVICE AND ARE THE PROPERTY OF THE ARCHITECT.
This and all documents produced by this firm under this agreement shall remain the sole property of this firm and may not be used, copied, changed or distributed by the client or others without the written consent of this firm.
INFRINGEMENTS WILL BE PROSECUTED.

CONTRACTOR SHALL VERIFY ALL CONDITIONS AND MEASUREMENTS IN THE FIELD AND BE RESPONSIBLE FOR FIELD FIT AND QUANTITY OF WORK. NO ALLOWANCES SHALL BE MADE IN BEHALF OF THE CONTRACTOR FOR ANY ERROR OR NEGLECT ON HIS PART.

"THIS PLAN IS APPROVED ONLY FOR WORK INDICATED ON THE APPLICATION SPECIFICATION SHEET. ALL OTHER MATTERS SHOWN ARE NOT TO BE RELIED UPON, OR TO BE CONSIDERED AS EITHER BEING APPROVED OR IN ACCORDANCE WITH APPLICABLE CODES."

No.	Description	Date

PROJECT
36-37 31ST STREET
LONG ISLAND CITY, NY
11106

GENERAL NOTES & ABBREVIATIONS

SCALE : N.T.S.

SEAL: REGISTERED ARCHITECT ANTHONY J. MORALI 026783-1 STATE OF NEW YORK

Date	10.12.15
Project Number	1507
Drawn By	CI
Checked By	AM

A-001.00

MULTIPLE DWELLING LAW & HOUSING MAINTENANCE CODE

PAINTING:

(SEC. 29 M.D.L. & ART. 12 H.M.G.)

1. PAINTING OF PUBLIC PARTS AND WITHIN DWELLINGS SHALL COMPLY WITH SEC. D26-12.01 H.M.D.
2. PAINTING OF WINDOW FRAMES SHALL COMPLY WITH SEC. D26-12.03 H.M.C.
3. WALLS OF COURTS AND SHAFTS SHALL BE OF A LIGHT COLORED SURFACE.

EXTERMINATION & RAT PROOFING:

(SEC. 80 M.D.L. & ART. 13 H.M.C.)

1. DWELLINGS SHALL BE SO CONSTRUCTED AS TO BE RAT-PROOF.
2. PREMISES SHALL BE MAINTAINED AND KEPT FREE OF RODENT AND INSECT INFESTATION.

RECEPTACLES FOR AND COLLECTION OF WASTE MATTER:

(SEC. 81 M.D.L. & ART. 14 H.M.C.)

1. PROPER AND SUITABLE CONVENIENCES OR RECEPTACLES SHALL BE PROVIDED FOR COLLECTION OF WASTE MATTER.

PLUMBING AND DRAINAGE:

(SEC. 77 M.D.L. & ART. 16 H.M.C.)

1. ENTIRE PLUMBING AND DRAINAGE SYSTEM INCLUDING ALL PLUMBING FIXTURES SHALL BE PROPERLY MAINTAINED AND KEPT IN GOOD REPAIR AT ALL TIMES.
2. ROOFS, TERRACES, SHAFTS, COURTS, AREAS AND YARDS SHALL BE PROPERLY GRADED AND DRAINED. (SEE SITE PLAN).

HEAT AND HOT WATER:

(SEC. 79 M.D.L. & ART. 17 H.M.C.)

1. YEARLY INSPECTIONS OF CENTRAL HEATING PLANTS SHALL BE MADE BY QUALIFIED PERSON.
2. MINIMUM TEMPERATURES FOR HEATING AND HOT WATER SHALL BE MAINTAINED.

GAS METERS AND GAS APPLIANCES:

(SEC. 64 M.D.L. & ART. 18 H.M.C.)

1. GAS METERS SHALL COMPLY WITH SEC. 64 M.D.L.
2. GAS APPLIANCES SHALL, IN ADDITION TO THESE SECTIONS, COMPLY WITH THE BOARD OF STANDARDS AND APPEALS.

ARTIFICIAL LIGHTING AND ENTRANCE DOORS:

(SEC. 26 & 35 M.D.L. & ART. 19 H.M.C.)

1. PROPER ELECTRIC LIGHTING AND EQUIPMENT SHALL BE PROVIDED AND MAINTAINED WITHIN ALL DWELLINGS.
2. PROPER ELECTRIC LIGHTS SHALL BE INSTALLED AND MAINTAINED AT OR NEAR THE OUTSIDE OF FRONT ENTRANCE WAY AND IN EVERY REAR YARD, SIDE YARD, FRONT YARD AND COURTS, MINIMUM OF 50 WATTS INCANDESCENT ILLUMINATION OR EQUIVALENT AT FRONT ENTRANCE WAY AND MINIMUM OF 40 WATTS IN YARDS AND COURTS AND SHALL BE KEPT BURNING FROM SUNSET EACH DAY TO SUNRISE ON THE DAY FOLLOWING.
3. MAIN ENTRANCE AND VESTIBULE DOORS SHALL HAVE NOT LESS THAN FIVE (5) SQ.FT. OF GLAZED SURFACE.
4. ALL ELECTRICAL TO COMPLY WITH THE REQUIREMENTS OF THE NEW YORK CITY ELECTRICAL CODE
5. IN TOILET ROOMS, THE REQUIRED MEANS OF PRODUCING ARTIFICIAL ILLUMINATION SHALL BE CAPABLE OF PRUDUCING AN AVERAGE OF INTENSITY OF NOT LESS THAN 10 FEET CANDLES WHEN MEASURED AT 30" ABOVE THE FLOOR : SEC. C26-1203.4.
6. THERE WILL BE 24 HOUR ILLUMINATION ADJACENT TO THE MAIL BOXES. A LIGHTING FIXTURE WITH CONSTANT CURRENT WILL BE PROVIDED IN THE PUBLIC HALL NEAR THE ELEVATOR.
7. CONDUIT IN FIRE RATED PARTITIONS WILL NOT EXCEED 3/4" DIAMETER: OUTLETS IN SUCH PARTITIONS SHALL BE BACKED UP WITH SUCH APPROVED MATERIALS.
8. ARTIFICIAL LIGHTING AND ENTRANCE DOORS TO COMPLY WITH SEC. 26 & 35 MDL AND ART. 19 H.M.C.

ENTRANCE DOORS:

(SEC. 50-A M.D.L. & ART. 20 H.M.C.)

1. BUILDING ENTRANCES AND ALL OTHER EXTERIOR ENTRANCES SHALL BE EQUIPPED WITH APPROVED TYPE AUTOMATIC SELF-CLOSING AND SELF-LOCKING DOORS.
2. ENTRANCE DOORS TO EACH DWELLING UNIT SHALL HAVE KEY LOCK WITH AT LEAST ONE KEY TO BE PROVIDED BY OWNER.
3. CLASS "A" MULTIPLE DWELLINGS CONTAINING EIGHT OR MORE APARTMENTS SHALL BE EQUIPPED WITH AN APPROVED TYPE INTER-COMMUNICATION SYSTEM LOCATED AT THE DOOR GIVING ACCESS TO THE MAIN ENTRANCE HALL OR LOBBY.

PEEPHOLES:

(SEC. 51-A M.D.L. & ART. 20 H.M.C.)

1. PEEPHOLES SHALL BE PROVIDED IN ENTRANCE DOORS OF EACH DWELLING UNIT, MANUFACTURED BY S. PARKER HARDWARE, 27 LUDLOW ST., N.Y.: MODEL NO. 1606, MEA 1027-65-SM.

BELLS AND MAIL SERVICES:

(SEC. 57 M.D.L. & ART. 21 H.M.C.)

1. BELL AND BUZZER SYSTEM SHALL BE APPROVED TYPE AND SHALL BE KEPT IN GOOD WORKING ORDER.
2. PROVIDE AND MAINTAIN APPROVED TYPE MAIL RECEPTACLES AND DIRECTORIES OF PERSONS LIVING IN THE DWELLING AS PROVIDED BY FEDERAL LAW AND AS PER REGULATIONS OF THE POST OFFICE DEPT.

FLOOR SIGNS AND STREET NUMBERS:

(ART. 21 H.M.C.)

1. PROPER FLOOR SIGNS SHALL BE PROVIDED AND MAINTAINED IN PUBLIC HALL NEAR STAIRS AND ELEVATOR AND WITHIN STAIR ENCLOSURE.
2. PROPER STREET NUMBERS SHALL BE POSTED AND MAINTAINED IN FRONT OF THE DWELLING IN ACCORDANCE WITH THE ADMINISTRATIVE CODE AND THE RULES AND REGULATIONS OF THE BOROUGH PRESIDENT.

JANITORIAL SERVICE:

(SEC. 83 M.D.L. & ART. 22 H.M.C.)

1. PROPER JANITORIAL SERVICES SHALL BE PROVIDED IN DWELLING CONTAINING NINE OR MORE DWELLING UNITS.

LIGHTING AND VENTILATION:

(SEC. 30 M.D.L. & ART. 30 H.M.C.)

1. WINDOWS IN ALL ROOMS, EXCEPT BATHROOM AND KITCHENETTES, SHALL BE AT LEAST ONE-TENTH THE AREA OF THE ROOM AND BE AT LEAST 12 SQ. FT. IN AREA B.S.B.
2. ROOMS HAVING ONLY ONE WINDOW LESS THAN 18 SQ. FT. IN AREA SHALL HAVE A TRANSOM OR LOUVER, OVER THE DOOR, HAVING A MINIMUM AREA OF 144 SQ. IN.

WATER CLOSET AND BATH ACCOMMODATIONS:

(SEC. 76 M.D.L. & ART. 31 H.M.C.)

1. WALLS AND FLOORS OF WATER CLOSET COMPARTMENTS, BATHROOMS AND LAVATORIES SHALL COMPLY WITH REQUIREMENTS OF THESE SECTIONS.
2. EVERY WATER CLOSET COMPARTMENT, BATHROOM OR LAVATORY SHALL HAVE A WINDOW OF AT LEAST 3 SQ. FT. IN AREA AND ONE-HALF THE AREA SHALL BE OPEN.
3. IN LIEU OF A WINDOW MECHANICAL VENTILATION MAY BE INSTALLED WHICH WILL PROVIDE AT LEAST FOUR CHANGES OF AIR PER HOUR OR A MINIMUM OF 50 CU. FT. OF AIR FOR EACH SUCH WATER CLOSET COMPARTMENT, BATHROOM OR LAVATORY AND SHALL BE PROVIDED WITH APPROVED TYPE REGISTER AND TENANT OPERATED FAN WITH FUSIBLE LINK DAMPER B.S. & A. CAL. #638-41-SM. DUCTS TO BE COVERED WITH 5/8" F.C. 60.
4. PROVIDE CERAMIC TILE FLOOR AND MIN. 6" TILE BASE IN TOILETS.
5. PROVIDE RECESS FOR MEDICINE CABINETS IN BATHROOMS AND TOILETS.
6. ALL BATHTUBS RECESSED OR OTHERWISE, SHALL BE PROVIDED WITH SUFFICIENT CURTAIN RODS.

KITCHEN AND KITCHENETTES:

(SEC. 33 M.D.L. & ART. 32 H.M.C.)

1. EVERY KITCHEN AND KITCHENETTE SHALL BE PROVIDED WITH ELECTRICITY FOR COOKING AND SHALL BE EQUIPPED FOR ARTIFICIAL LIGHTING.
2. EVERY KITCHEN AND KITCHENETTE SHALL BE PROVIDED WITH A SINK HAVING MINIMUM 2" WASTE AND TRAP.
3. LIGHTING AND VENTILATION OF KITCHENS SHALL BE AS PROVIDED UNDER SEC. 30 M.D.L. & ART. 30 H.M.C.
4. WALLS, EXCLUSIVE OF DOORS, OF ALL KITCHENETTE SHALL BE FIRE RETARDED WITH 5/8" FIRECODE 60 BOTH SIDES.
5. KITCHENETTES SHALL BE PROVIDED WITH A WINDOW AT LEAST ONE FOOT WIDE 3 SQ.FT. IN AREA AND BE AT LEAST 10 % OF THE FLOOR AREA. IN LIEU OF WINDOW MECHANICAL VENTILATION MAY BE INSTALLED WHICH WILL PROVIDE AT LEAST 6 CHANGES OF AIR PER HOUR.
6. ALL COMBUSTIBLE MATERIALS IMMEDIATELY UNDERNEATH AND WITHIN ONE FOOT OF COOKING APPARATUS SHALL BE PROPERLY FIRE RETARDED WITH 3/16" ASBESTOS AND 26 GAUGE METAL. THERE SHALL BE AT LEAST TWO FEET OF CLEAR SPACE ABOVE THE EXPOSED COOKING SURFACE OF ANY SUCH APPARATUS.
7. ALL KITCHENETTES SHALL HAVE 1'-0" DROP FROM CEILING AT OPENINGS.
8. SECTION 33, SUBDIVISION 3-B OF THE MULTIPLE DWELLING LAW AND SECTION D-26-32.05(a) ALL COOKING RANGES WILL BE INSTALLED IN ACCORDANCE WITH SECTION 64 MULTIPLE DWELLING LAW AND SECTION C26-1504 ADMINISTRATIVE CODE.

OCCUPANCY OF CELLARS AND BASEMENTS:

(SEC. 34 M.D.L. & ART. 34 H.M.C.)

1. ALL ROOMS IN CELLARS AND BASEMENTS SHALL COMPLY WITH REQUIREMENTS OF THESE SECTIONS.

REGISTRATION:

(ART. 9 M.D.L. & ART. 41 H.M.C.)

1. REGISTRATION STATEMENT SHALL BE FILED.
2. REGISTRATION IDENTIFICATION SIGN CONTAINING DWELLING SERIAL NUMBER SHALL BE POSTED.
3. IDENTIFICATION OF MANAGING AGENT OR OWNER SHALL BE INDICATED ON TENANTS RENT RECEIPT.

BOILER ROOMS:

(SEC. 65 M.D.L.)

1. BOILER ROOMS SHALL COMPLY WITH REQUIREMENTS OF THIS SECTION.

SECURITY REQUIREMENTS:

(604.4)

1. BUILDING ENTRANCE DOORS AND OTHER EXTERIOR DOORS SHALL BE PROVIDED WITH HEAVY DUTY LOCK SETS WITH AUXILIARY LATCH BOLTS TO PREVENT THE LATCH FROM BEING MANIPULATED BY OTHER THAN A KEY.
2. DOORS TO DWELLING UNITS SHALL BE EQUIPPED WITH A HEAVY DUTY LOCKSET, A DEAD BOLT, THUMB TURN INSIDE, AND A CHAIN DOOR GUARD.
3. ALL OPERABLE WINDOWS SHALL BE EQUIPPED WITH SASH LOCKS DESIGNED TO BE OPERABLE FROM THE INSIDE ONLY.
4. BUILDINGS CLASSIFIED IN OCCUPANCY GROUP J-2 CONTAINING EIGHT OR MORE DWELLING UNITS SHALL BE PROVIDED WITH AN INTERCOMMUNICATION SYSTEM LOCATED AT THE DOOR GIVING ACCESS TO THE MAIN ENTRANCE HALL OR LOBBY.

GLASS:

(1011.)

1. MINIMUM THICKNESS OF GLASS LOCATED LESS THAN 300 FEET ABOVE GRADE SHALL BE AS FOLLOWS:

MAXIMUM AREA OF GLASS PANE (SQ.FT.)	MINIMUM THICKNESS
9	SINGLE STRENGTH
13	DOUBLE STRENGTH
25	3/16" OF 13/64" PLATE GLASS
32	7/32"
37	1/4" PLATE GLASS
54	5/16" PLATE GLASS
74	3/8" PLATE GLASS

2. IF GLASS TO BE USED IS "SPECIAL GLASS" AS DEFINED IN SEC. 1011.5 OF CODE, MAXIMUM PANE AREA CAN BE INCREASED IN ACCORDANCE WITH TABLE 10-8 OF THE CODE.
3. INSTALLATION, PROTECTION & DESIGN OF SUPPORTS OF ALL GLASS SHALL CONFORM TO SECTIONS 1011.6, 1011.7 AND 1011.9 OF THE CODE.
4. GLASS PANELS SUBJECT TO HUMAN IMPACT SHALL MEET THE REQUIREMENTS OF TABLE 10-9 OF THE CODE.

GENERAL NOTES:

1. LAUNDRY SHALL BE FOR TENANT'S USE ONLY, MACHINES SHALL BE APPROVED SELF-SERVICE TYPE, NO EMPLOYEES SHALL BE ENGAGED IN OPERATION OF EXTRACTORS OR DRYER.
2. MASON CONTRACTOR SHALL PROVIDE ALL CHASES AND POCKETS REQUIRED BY OTHER TRADES.
3. WALL UNDER WINDOWS SHALL BE RECESSED FOR RADIATORS WHERE SHOWN ON PLANS. SAME SHALL BE WATERPROOFED AND INSULATED. RADIATORS SHALL NOT OBSTRUCT STAIRS OR PUBLIC HALLS.
4. ALL F.P.S.C. DOORS AND TRIM SHALL HAVE FIRE RATING AS SPECIFIED ON PLAN OR DOOR SCHEDULE.
5. IN ALL BATHROOMS PROVIDE CERAMIC TILE FLOOR AND 4'0" HIGH WAINSCOT ALSO AROUND BATHTUBS AND STALL SHOWERS PROVIDE 6'0" HIGH CERAMIC TILE WALL COVERING OVER WATER RESISTANT B.S. & A. APPROVED TYPE WALLBOARD.
6. CARPENTER SHALL PROVIDE RECESS FOR MEDIUM CABINETS IN BATHROOMS AND LAVATORIES.
7. ALL BATHTUBS, RECESSED OR OTHERWISE, SHALL BE PROVIDED WITH SUFFICIENT CURTAIN RODS.
8. PROVIDE AND SET WOOD SHELVES AND 11/2" DIAMETER HORIZONTAL WOOD OR METAL POLE IN EACH CLOSET. LINEN CLOSETS SHALL HAVE FIVE SHELVES.
9. MAXIMUM SPACING BETWEEN VERTICAL BARS ON BALCONY RAILINGS SHALL BE 5". RAIL SHALL BE MINIMUM 3'6" HIGH.

SMOKE DETECTOR NOTES:

Provide smoke detectors as follows:

A. Each dwelling shall be equipped with an approved type smoke detector device receiving primary power from the building wiring with no switches in the circuit other than the over circuit device protecting the branch circuit as per section C26-1705.3.

B. Such smoke detectors must be either the ionization-chamber type or the photoelectric type as per section C26-1705.3 (sub. B).

C. All Smoke detectors must be installed within 15"-0" of the entrance to any sleeping room, wall or ceiling mounted, and indicated on the plan as per N.F.P.A.. #74-19180.

D. A certificate of satisfactory installation for smoke detectors must be filled with the division of code enforcement 10 days after installation.

NEW YORK STATE ENERGY CONSERVATION CONSTRUCTION CODE

GENERAL NOTES AND SCHEDULES

1. ALL EQUIPMENT SHALL BE IDENTIFIED TO INDICATE COMPLIANCE WITH THIS CODE.
2. MAINTANANCE INSTRUCTIONS FOR ANY EQUIPMENT WHICH REQUIRES PREVENTATIVE MAINTENANCE FOR EFFICIENT OPERATION SHALL BRE CLEARLY STATED IN WRITING AND READILY ACCESSIBLE.
3. THE OUTDOOOR DESIGN TEMPERATURE SHALL BE AS FOLLOWS:

SUMMER: 89 DEGREES
WINTER: 15 DEGREES (N.Y.S.), 0 (N.Y.C.)

4. USE 5000 HEATING DEGREE DYAS IN SELECTING THE APPROPRIATE COEFFICIENT OF HEAT TRANSFER "U".
5. THE INDOOR DESIGN TEMPERATURE SHALL BE AS FOLLOWS:

N.Y. STATE MAXIMUM 72 F. HEATING
N.Y. STATE MINIMUM 78 F COOLING

6. THE MAXIMUM DESIGN RELATIVE HUMIDITY SHALL BE 30 PERCENT IF HUMIDIFICATION IS PROVIDED DURING HEATING.
7. FOR RESIDENTIAL BUILDINGS THE FOLLOWING AREAS OF GLAZING AS A TOTAL PERCENTAGE OF THE TOTAL WALL AREA SHALL BE USED TO DETERMINE THE MAXIMUM Uo. RESIDENTIAL -OVER THREE STORIES-42 PERCENT.
8. CRITERIA FOR RESIDENTIALBUILDINGS - OVER THREE STORIES
DEGREE DAYS: 5000
MAXIMUM Uo WALLS-RESIDENTIAL OVER THREE STORIES .36
EXTERIOR WALLS =Uw=. 08
ENTRANCE DOORS =Uo=. 40
GLAZING =Ug=. 69
MAXIMUM Uo ROOF/CEILING, FLOORS EXPOSED TO AMBIANT CONDITIONS .05
MAXIMUM Uo FLOORS OVER UNHEATED SPACES . 08
OR ABOVE GARDE FOYUNDATION WALLS ENCLOSING MIN.
R SLAB EDGE, UNHEATED SLAB & BASEMENT WLLS BELOW - . 5.0
GRADE (FOR BASEMENT WALLS BELOW GRADE THE "R" VALUE SHALL INCLUDE ALL OF THE TERMINAL RESISTANCES OF THE WALL COMPONENTS.) MIN. R SLAB EDGE HEATED SLAB . 6-3
9. INSULATION MAY BE OMITTED FROM FLOORS OVER UNHEATED SPACES WHEN FOUNDATION WALLS ARE INSULATED TO PROVIDE THERMAL RESISTANCE AND FOUNDATION WALL VNITS ARE PROVIDED WITH A CLOSABLE DAMPER.
10. THE INSULATION FOR SLAB ON GRADE FLOORS SHALL EXTEND DOWNWARD FROM THE TOP OF SLAB FOR A MINIMUM DISATNCE OF 24" OR DOWNWARD TO THE BOTTOM OF THE SLAB THEN HORIZONTALY BENEATH THE SLAB FOR A MINIMUM TOTAL DISTANCE OF 24" WITH VAPOR BARRIER WITH R FACTOR OF 7-8.
11. ALL INSULATION WHICH IS CAPABLE OF ABSORBING WATER SHALL BE PROTECTED BY A VAPOR BARRIER LOCATED ON THE WINTER WARM SIDE OF THE INSULLATION.
12. INSULATION SHALL BE INSTALLED IN A MANNER THAT PROVIDES CONTINUITY OF INSULATION AT PLATE LINES, TILL LINES AND CORNERS.

ALL EXTERIOR DOORS AND WINDOWS SHALL BE DESIGNED TO LIMIT AIR LEAKAGE INTO OR OUT OF THE BUILDING ENVELOPE. MANUFACTURED DORS AND WINDOWS SHALL HAVE AIR INFILTRATION RATES NOT EXCEEDING THE FOLLOWING TABLE:

WINDOWS-CFM PER LINEAR FOOT OF OPERABLE SASH CRACK . 0.5
WHEN TESTED AT A PRESSURE (IMPACT) OF A 25 MPH WIND. DOORS
-CFM PER SQUARE FOOT OF DOOR AREA WHEN TESTED AT A PRESSURE (IMPACT) OF A 25 MPH WIND
3 RESIDENTIAL -SWINGING . 1.0
3 NON -RESIDENTIAL-SWINGING 11.0

13. EXTERIOR JOINTS AROUND WINDOWS AND DOOR FRAMES: OPENINGS BETWEEN WALLS AND ROOF/CEILINGS AND BETWEEN WALL PANELS: OPENINGS AT PENETRATIONS OF UTILITY SERVICE THROUGH WALLS, FLOORS AND ROOFS: AND ALL OTHER SUCH OPENINGS IN THE BUILDING ENVELOPE SHALL BE CAULKED, GASKETED, WEATHER STRIPPED OR OTHERWISE SEALED.
14. MAIN ENTRANCE DOORS SHALL BE OF VESTIBULES TYPE TO REDUCE INFILTRATION LOSSES. VESTIBULE DOORS SHALL BE SELF-CLOSING.
15. NON RESIDENTIAL TEMPERATURE CONTROL:
EACH HVAC SYSTEM SHALL BE PROVIDED WITH AT LEAST ONE ADJUSTIBLE THERMOSTAT FOR THE REGULATION OF TEMPERATURE. EACH THERMOSTAT SHALL BE CAPABLE OF BEING SET AS FOLLOWS: WHERE USED TO CONTROL HEATING ONLY 45 TO 75 F.
16. INSULATION MATERIALS AND THICKNESSES:
] A. RIGID POLYURETHANE AND PERLITE COMPOSIT BOARD:
3 1/2." THICK "R" VALUE=20 1.00 / 20 = "U" FACTOR .05
B. RIGID EXTRUDED POLYURETHANE BOARD:
3" THICK "R" VALUE=15 1.00 / 15 = "U" FACTOR .066
C. FIBERGLASS BATT OR ROLL TYPE:
3 1/2." THICK "R" VALUE = 1e 1.00 / 13 = "U" FACTOR .07
D. ROCKWOOL BATT OR ROLL TYPE:
3 1/2." THICK "R" VALUE = 1e 1.00 / 13 = "U" FACTOR .07
E. FIBERGLASS RIGID ROOF INSULATION:
1 7/8" THICK "R" VALUE 7.69 1.00-7.69 = "U" FACTOR = 0.13

ALL ABOVE INSULATION MATERIALS TO HAVE VAPOR BARRIER INSTALLED ON WARM SIDE OF ROOM. (ROOM SIDE)

17. ZONING FOR TEMPERATURE CONTROL:
A. RESIDENTIAL BUILDINGS SHALL BE PROVIDED WITH AT LEAST ONE THERMOSTAT FOR REGULATION OF SPACE TEMPERATURE FOR:
EACH SEPARATE HVAC SYSTEM OR MULTI ZONE HVAC SYSTEM
EACH SEPARATE ZONE- OR MULTI ZONE

A READILY ACCESSIBLE MANUAL OR AUTOMATIC MEANS TO PARTIALLY RESTRICT OR SHUT OFF THE HEATING TO EACH DWELLING UNIT.

18. CONTROL SETBACK AND SHUT-OFF
A. RESIDENTIAL PORTION:
THERMOSTAT SHALL PROVIDE A READILY ACCESSIBLE MANUAL OR AUTOMATIC MEANS TO PARTIALLY REDUCE THE ENERGY REQUIRED FOR HEATING DURING REDUCED PERIODS AND SLEEPING HOURS.
B. COMMUNITY AREA:
EACH HVAC SYSTEM SHALL BE EQUIPPED WITH A READILY ACCESSIBLE AND ACCEPTABLE MEANS OF SHUTTING OFF OR REDUCING THE ENERGY USED FOR HVAC DURING PERIOD OF NON USE OR ALTERNATE USES SERVED BY THE SYSTEM.
19. CRITERIA FOR NON RESIDENTIAL BUILDING: COMMUNITY CENTER (IF APPLICABLE)
A. DEGREE DAYS: 5000
B. MAX. Uo WALLS -THREE STRIES OR LESS .80
C. MAX. Uo ROOF/CEILING, FLORS - EXPOSED TO AMBIENT CONDITIONS .08
D. MAX. Uo FLOOORS OVER UNHEATED SPACES - OR ABOVE GRADE FOUNDATIONS WALLS .08
E. MIN. R SLAB EDGE, UNHEATED SLAB AND BASEMENT WALLS BELOW GRADE - 5.00 (FOR BASEMENT WALLS BELOW GRADE THE "R" VALUE SHALL INCLUDE ALL OF THE THERMAL RESISTANCE OF THE WALL COMPONENTS)
F. MIN. R SLAB EDGE- HEATED SLAB 6.3
20. REQUIRED INSULATION TO HAVE EITHER A BSA OR MEA APPROVAL. ACCEPTABLE MATERIALS AND APPROVALS ARE AS FOLLOWS:
A. OWENS- CORNING FIBERGLASS BSA CAL. NO. 620-40 SM WHICH MEETS THE REQUIREMENTS OF FED. SPEC. HH- 1-521E, TYPE I, TYPE II, TYPE III.
B. ROCK WOOL INDUSTRIES INC.
1. ROCK WOOL INSULATION BLOWING WOOL MEETS THE REQUIREMENT OF FED. SPEC. HH 1-1030 B, CLASS A, TYPE 1 AND ASTM DES. C.764-73, CLASS A, TYPE I. COMPLIES WITH DEPT. OF ENERGY STANDARDS.
2. BATT BLANKETS MEETS THE REQUIREMENTS OF FED. SPEC. HH-1-521F AND ASTM DES. C-665-70, TYPE I FOR UNFACED BATTS TYPE II FOR KRAFT FACED BATTS AND TYPE III FOR FOIL FACED BATTS WITH INTEGRAL VAPOR BARRIER. COMPLIES WITH DEPT. OF ENERGY STANDARDS.
C. OWENS CORNING RIGID FIBERGLASS ROOF INSULATION MEETS THE REQUIREMENTS (PHYSICAL PROPERTY) OF FED. SPECS. HH-1526 AND ASTM C726.
21. PIPING INSULATION E503.5:
ALL PIPING INSTALLED TO SERVE BUILDING OR WITHIN BUILDINGS SHALL BE THERMALLY INSULATED IN ACCORDANCE WITH THE FOLLOWING TABLE EXCEPT AS PROVIDED IN E403.9
MINIMUM PIPES INSULATION TABLE 4.5 - E 403.9

INSUL. THICK. IN INCHES FOR PIPE SIXES

PIPING FLUID RUN OUTS 1" 1 1/4. 2 1/2 5" 8"
SYSTEMS TEMP. UP TO AND TO TO TO AND
TYPES RANGE 2" LESS 2" 4" 6" LARGER
(DEGREES)F *

LOW TEMP 120-200 " 3/4" 1" 1" 1" 1 1/2.

COOLING SYSTEMS
CHILLED WATER 40-55 1/2." 1/2." 3/4." 1" 1" 1"
REFRIGERENT BELOW 1." 1" 1 1/2." 1 1/2." 1 1/2." 1 1/2."
OR BRINE 40

NOTES PERTAINING TO TABLE:
PIPING INSULATION SHALL NOT BE REQUIRED IN ANY OF THE FOLLOWING CASES:
(a) PIPING INSULATION WITHIN HVAC EQUIPMENT.
(b) PIPING FOR FLUIDS AT TEMPERATURES BETWEEN 55 (DEGREES) F AND 120 (DEGREES) F WHEN THE FLUID IS NOT REQUIRED FOR ENERGY CONSERVATION PURPOSES.
(c) WHEN THE HEAT LOS AND/OR HEAT GAIN OF THE PIPING , WITHOUT INSULATION, DOES NOT INCREASE THE ENERGY REQUIREMENTS OF THE BUILDING.
(d) LOCAL BRANCH RUNOUTS NOT EXCEEDING 12"IN LENGTH TO INDIVIDUAL TERMINAL UNITS.
22. SERVICE WATER HEATING - E504.0
1. PERFORMANCE EFFICIENCY. ALL ELECTRIC, OIL AND GAS WATER HEATERS SHALL MEET ALL REQUIREMENTS OF E404.4.
2. CIRCULATING HOT WATER SYSTEMS SHALL BE ARRANGED SO THAT THE CIRCULATING PUMP (S) CAN BE CONVENIENTLY TURNED OFF, AUTOMATICALLY OR MANUALLY, WHEN THE HOT WATER SYSTEM IS NOT IN OPERATION.
3. PIPE INSULATION FOR SERVICE HOT WATER SUPPLY AND RECIRCULATING SYSTEMS SHALL BE INSULATED IN ACCORDANCE WITH REQUIREMENTS OF E404.4(b).
23. ELECTRICAL POWER AND LIGHTING CONFORM TO E505.1
24. RESIDENTIAL GLAZING - E502.2 (CHART 5-B)
Uw VALUE FOR GLAZING=. 69 (COMBINATION WALL AND DOUBLE BLAZED OPENINGS).
25. HVAC EQUIPMENT PERFORMANCE REQUIREMENTS E503.2
1. HEATING AND MECHANICAL COOLING EQUIPMENT PERFORMANCE. THE REQUIREMENTS OF THIS SECTION APPLY TO EQUIPMENT AND MECHANICAL COMPONENT PERFORMANCE. EQUIPMENT SHALL BE RATED IN ACCORDANCE WITH SECTION 403.13. ALL HEATING AND MECHANICAL COOLING EQUIPMENT SHALL MEET THE REQUIREWD EFFIECIENCY FACTOR FOR SPECIFIED HEREIN OR IN TABLES LISTED IN E403.13 FOR THE SPECIFIC TYPE OF DEVICE.
2. COMBUSTION HEATING EQUIPMENT. ALL GAS AND OIL FIRED COMFORT HEATING EQUIPMENT SHALL SHOW A MINIMUM COMBUSTION EFFICIENCE OF 75 PERCENT AT MAXIMUM RATED OUTPUT.
26. AIR HANDLING DUCT SYSTEM INSULATION:
1. ALL DUCTS, PLENUMS AND ENCLOSURES CONVEYING HEATED OR COOLED AIR INSTALLED IN UNHEATED BASEMENTS OR ON BUILDINGS SHALL BE THERMALLY INSULATED AND CONSTRUCTED IN ACCORDANCE WITH E403.10, BUT SHALL HAVE A THERMAL RESISTANCE OF NOT LESS THAN 5.0 WHEN DELTA T= 15(DEGREES) F OR ABOVE.
2. DUST INSULATION (EXCEPT USED TO PREVENT CONDENSATION) SHALL NOT BE REQUIRED, HOWEVER, IN ANY OF THE FOLLOWING AREAS.
a) WHERE DELTA T IS 14.9 DEGREES F. OR LESS.
b) WHEN THE HEAT GAIN OR LESS OF THE DUCTS, WITHOUT INSULATION, WILL NOT INCREASE THE ENERGY REQUIREMENTS OF THE BUILDING.
c) WITHIN HVAC EQUIPMENT.
d) EXHAUST AIR DUCTS.
27. DESIGN PROFFESIONAL STATES THAT TO THE BEST OF HIS KNOWLEDGE AND PROFESSIONAL JUDGEMENT THE DESIGN HAS BEEN MADE IN CONFORMANCE WITH THE ENERGY CODE.
28. INSULATION MATERIALS - N.Y.C. ADMINISTRATIVE - C26-1409.3
ALL INSULATION SHALL BE OF NON-COMBUSTIBLE MATERIALS.ALL COVERINGS, VAPOR BARRIERS AND ADHESIVE SHALL HAVE A FLAME SPREAD RATING NO HIGHER THAN 25 AND A SMOKE DEVELOPED RATING NO HIGHER THAN 50.
29. ARCHITECTS HAVE NOT BEEN RETAINED FOR ANY SUPERVISION OF INSTALLATION OF MATERIALS AS REQUIRED BY THE ENERGY CODE AT THE JOB SITE.
30. CONTRACTOR SHALL BE RESPONSIBLE FOR AND COMPLY WITH ALL THE APPLICABLE LAWS, ORDINANCES, RULES AND REGULATIONS OF THE NEW YORK STATE ENERGY CODE AND SHALL PROVIDE ALL THE CRITERIA AS OUTLINED IN THESE GENERAL NOTES PERTAINING TO RELATED EQUIPMENT, MATERIALS AND INSTALLATION AT JOB SITE.

ARCHITECT:
MORALI ARCHITECTURE
505 8th AVENUE, SUITE 2202, NEW YORK, NY, 10018
TEL. 212 219 2091 E-MAIL: JMORALI@MORALIARCHITECTURE.COM

IMA ENGINEERING , PC
123-23 82 AVENUE, KEW GARDENS, NY, 11415 TEL: 718 268 8600

ADVANCED CLEANUP TECHNOLOGIES, INC.
110 MAIN STREET, SUITE 103, PORT WASHINGTON, NY, 11050

COPYRIGHT (C)
THESE PLAN ARE AN INSTRUMENT OF SERVICE AND ARE THE PROPERTY OF THE ARCHITECT.
This and all documents produced by this firm under this agreement shall remain the sole property of this firm and may not be used, copied, changed or distributed by the client or others without the written consent of this firm.
INFRINGEMENTS WILL BE PROSECUTED.

CONTRACTOR SHALL VERIFY ALL CONDITIONS AND MEASUREMENTS IN THE FIELD AND BE RESPONSIBLE FOR FIELD FIT AND QUANTITY OF WORK. NO ALLOWANCES SHALL BE MADE IN BEHALF OF THE CONTRACTOR FOR ANY ERROR OR NEGLECT ON HIS PART.

"THIS PLAN IS APPROVED ONLY FOR WORK INDICATED ON THE APPLICATION SPECIFICATION SHEET. ALL OTHER MATTERS SHOWN ARE NOT TO BE RELIED UPON, OR TO BE CONSIDERED AS EITHER BEING APPROVED OR IN ACCORDANCE WITH APPLICABLE CODES."

No.	Description	Date

PROJECT
36-37 31ST STREET
LONG ISLAND CITY, NY
11106

NOTES

SCALE : N.T.S.

SEAL: REGISTERED ARCHITECT ANTHONY J. MORALI 017683-1 STATE OF NEW YORK

Date	10.12.15
Project Number	1507
Drawn By	CI
Checked By	AM

A-002.00

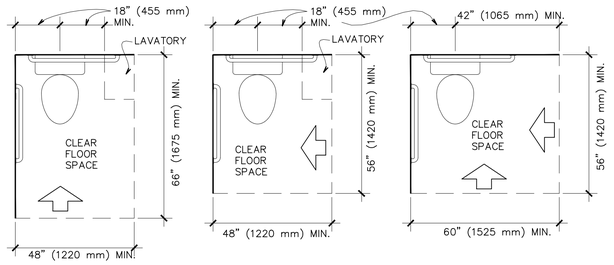

CLEAR FLOOR SPACE AT WATER CLOSETS

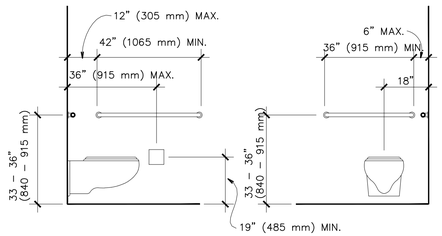

ELEVATIONS OF WATER CLOSETS

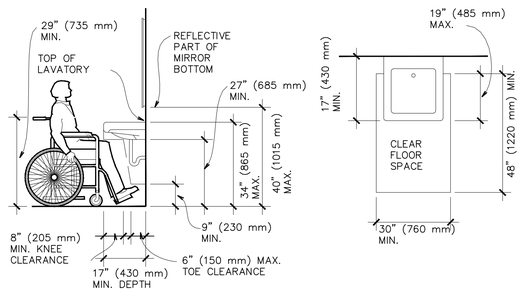

LAVATORY CLEARANCES

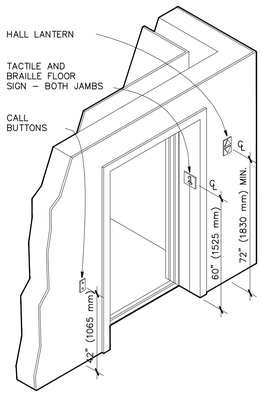

ELEVATOR DETAIL

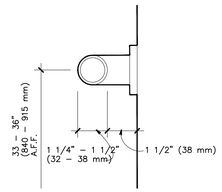

GRAB BAR DETAIL

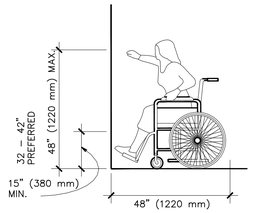

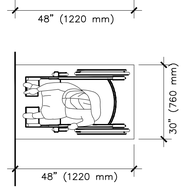

HIGH FORWARD REACH LIMIT

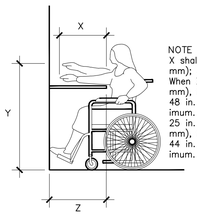

NOTE
X shall be <= 25 in. (635 mm); Z shall be >= X, When X < 20 in. (510 mm), then Y shall be 48 in. (1220 mm) maximum. When X is 20 to 25 in. (510 to 635 mm), then Y shall be 44 in. (1120 mm) maximum.

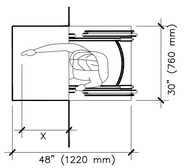

MAXIMUM FORWARD REACH OVER AN OBSTRUCTION

FORWARD REACH LIMITS

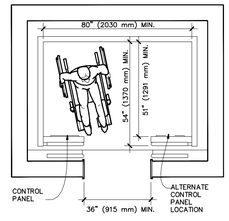

CAR WITH CENTER OPENING DOORS

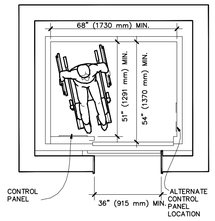

CAR WITH SIDE OPENING DOORS

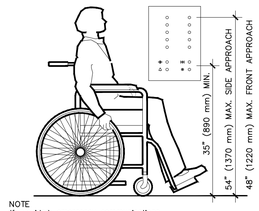

NOTE
If provided, emergency communications must be accessible per ADAAG.

CONTROL PANEL HEIGHT

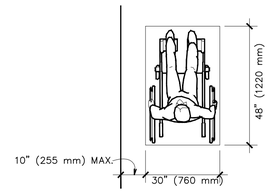

CLEAR FLOOR SPACE PARALLEL APPROACH

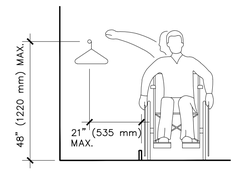

CLOSET

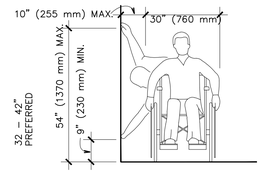

HIGH AND LOW SIDE REACH LIMITS

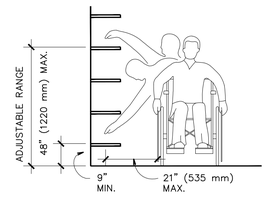

SHELVES

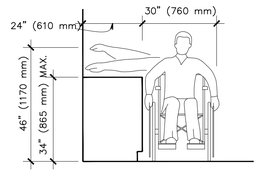

MAX. SIDE REACH OVER OBSTRUCTION

COUNTERS AND CLOSETS

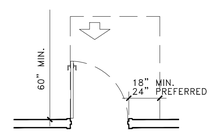

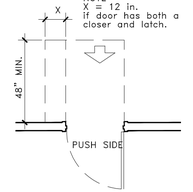

FRONT APPROACHES – SWINGING DOORS

ARCHITECT:
MORALI ARCHITECTURE
505 8th AVENUE, SUITE 2202, NEW YORK, NY, 10018
TEL. 212 219 2091 E-MAIL: JMORALI@MORALIARCHITECTURE.COM

IMA ENGINEERING , PC
123-23 82 AVENUE, KEW GARDENS, NY, 11415 TEL: 718 268 8600

ADVANCED CLEANUP TECHNOLOGIES, INC.
110 MAIN STREET, SUITE 103, PORT WASHINGTON, NY, 11050

COPYRIGHT (C)
THESE PLAN ARE AN INSTRUMENT OF SERVICE AND ARE THE PROPERTY OF THE ARCHITECT.
This and all documents produced by this firm under this agreement shall remain the sole property of this firm and may not be used, copied, changed or distributed by the client or others without the written consent of this firm.
INFRINGEMENTS WILL BE PROSECUTED.

CONTRACTOR SHALL VERIFY ALL CONDITIONS AND MEASUREMENTS IN THE FIELD AND BE RESPONSIBLE FOR FIELD FIT AND QUANTITY OF WORK. NO ALLOWANCES SHALL BE MADE IN BEHALF OF THE CONTRACTOR FOR ANY ERROR OR NEGLECT ON HIS PART.

"THIS PLAN IS APPROVED ONLY FOR WORK INDICATED ON THE APPLICATION SPECIFICATION SHEET. ALL OTHER MATTERS SHOWN ARE NOT TO BE RELIED UPON, OR TO BE CONSIDERED AS EITHER BEING APPROVED OR IN ACCORDANCE WITH APPLICABLE CODES."

No.	Description	Date

PROJECT
36-37 31ST STREET
LONG ISLAND CITY, NY
11106

ADA DETAILS

SCALE : N.T.S.

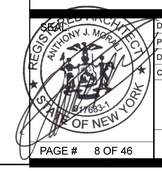

Date	10.12.15
Project Number	1507
Drawn By	CI
Checked By	AM

A-003.00

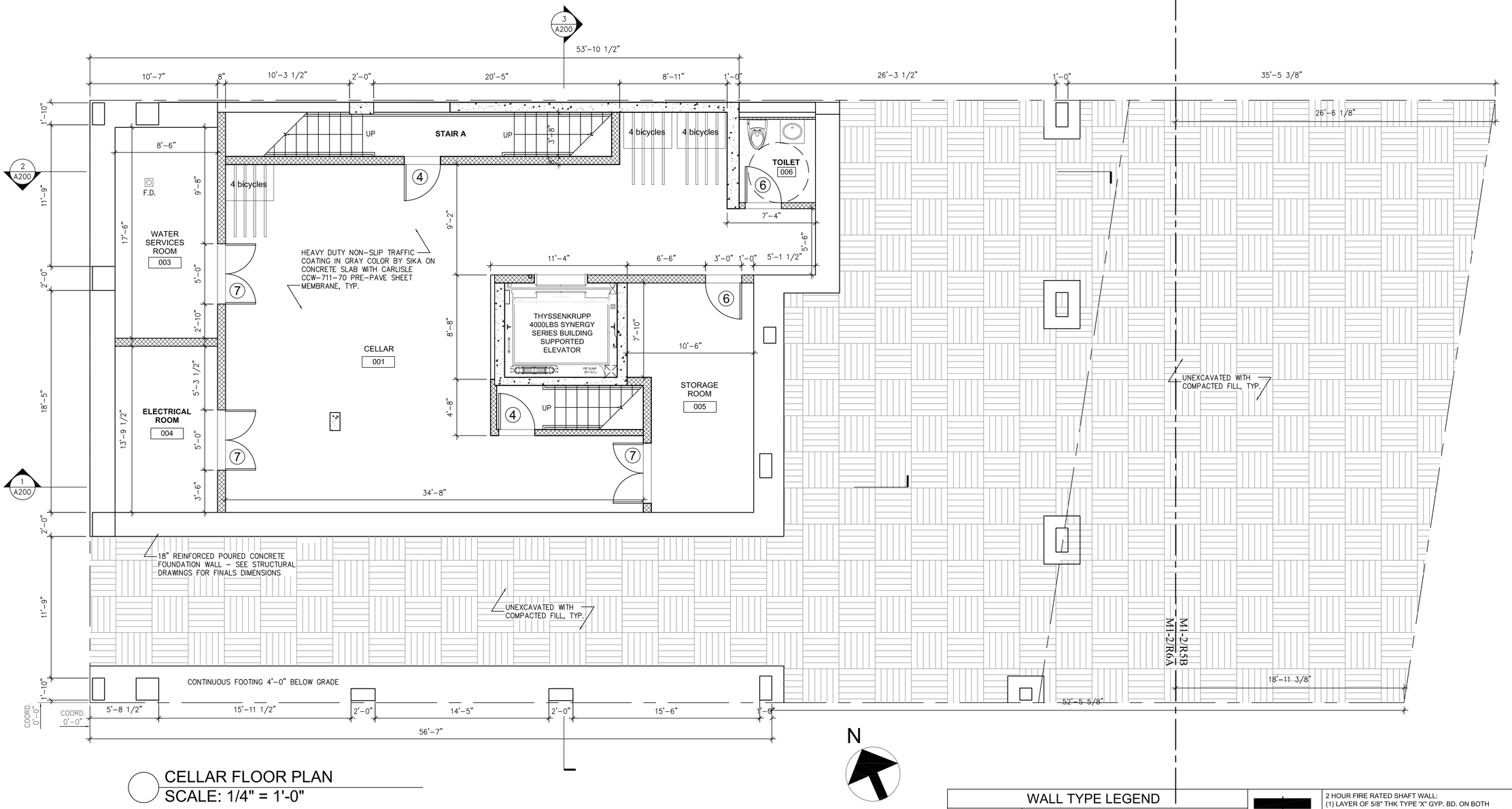

CELLAR FLOOR PLAN
SCALE: 1/4" = 1'-0"

WALL TYPE LEGEND

	EXISTING MASONRY WALL TO REMAIN
	EXTERIOR WALL- ALUMINUM COMPOSITE METAL PANEL WITH 1" XPS INSULATION + (2) LAYERS OF 5/8" DENSE-GLASS GOLD ON EXTERIOR SIDE AND (1) LAYER OF 5/8" GYP. BD. ON INTERIOR SIDE OF 6" METAL STUDS, 16 GA. @ 16" O.C. W/4" BATT INSULATION TO UNDERSIDE OF CONCRETE SLAB
	CAST IN PLACE CONCRETE WALL
	CONCRETE MASONRY WALL
8	3 HOUR FIRE RATED 8" CMU PARTITION AT TRASH CHUTE
0	2 HOUR FIRE RATED PARTITION: MASONRY EQUIVALENT (1) LAYER OF 5/8" THK IMPACT RESISTANCE GYP. BD. AND (1) LAYER OF 5/8" THK GYP. BD ON BOTH SIDES OF 3 5/8" MTL STUD, 20 GA MIN. @ 16" O.C. W/ 4" BATT INSULATION TO UNDERSIDE OF CONCRETE SLAB
1	2 HOUR FIRE RATED PARTITION: (2) LAYER OF 5/8" THK TYPE "X" GYP. BD. ON BOTH SIDES OF 3 5/8" MTL STUD @16" O.C. W/ 4" BATT INSULATION TO UNDERSIDE OF CONCRETE SLAB
2	2 HOUR FIRE RATED SHAFT WALL: (1) LAYER OF 5/8" THK TYPE "X" GYP. BD. ON BOTH SIDES OF 2 1/2" MTL I STUDS W/ 1"X24" TYPE X GYPSUM PANEL INSERTED BETWEEN 2 1/2" FLOOR AND CEILING TRACK
3	2 HOUR FIRE RATED PARTITION: (2) LAYER OF 5/8" THK TYPE "X" GYP. BD. ON INTERIOR SIDE OF 2 1/2" METAL STUDS @16" O.C. TO UNDERSIDE OF CONCRETE SLAB
4	1 HOUR FIRE RATED PARTITION: (1) LAYER OF 5/8" THK TYPE "X" GYP. BD. ON BOTH SIDES OF 3 5/8" MTL STUD @16" O.C. W/ 4" BATT INSULATION TO UNDERSIDE OF CONCRETE SLAB
5	INTERIOR FURRING PARTITION: (1) LAYER OF 5/8" THK TYPE "X" GYP. BD. ON INTERIOR SIDES OF 2 1/2" MTL STUD @16" O.C. W/ 2" BATT INSULATION TO UNDERSIDE OF CONCRETE SLAB
6	INTERIOR FURRING PARTITION: (1) LAYER OF 5/8" THK TYPE "X" GYP. BD. ON INTERIOR SIDES OF 7/8" MTL FURRING STRIP @16" O.C. TO UNDERSIDE OF CONCRETE SLAB
7	INTERIOR KNEE WALL PARTITION: (1) LAYER OF 5/8" THK TYPE "X" GYP. BD. ON BOTH SIDES OF 3 5/8" MTL STUDS @16" O.C. TO UNDERSIDE OF COUNTER TOP
11	INTERIOR CHASE WALL PARTITION: (1) LAYER OF 5/8" THK TYPE "X" GYP. BD. ON 1 5/8" METAL STUDS @16" O.C. TO UNDERSIDE OF CONCRETE SLAB ON BOTH SIDES OF 4" CHASE SPACE

ARCHITECT:
MORALI ARCHITECT
505 8th AVENUE, SUITE 2202, NEW YORK, NY, 10018
TEL. 212 219 2091 E-MAIL: MSTUDIONY@AOL.COM

IMA ENGINEERING , PC
123-23 82 AVENUE, KEW GARDENS, NY, 11415 TEL: 718 268 8600

ADVANCED CLEANUP TECHNOLOGIES, INC.
110 MAIN STREET, SUITE 103, PORT WASHINGTON, NY, 11050

COPYRIGHT (C)
THESE PLAN ARE AN INSTRUMENT OF SERVICE AND ARE THE PROPERTY OF THE ARCHITECT.
This and all documents produced by this firm under this agreement shall remain the sole property of this firm and may not be used, copied, changed or distributed by the client or others without the written consent of this firm.
INFRINGEMENTS WILL BE PROSECUTED.

CONTRACTOR SHALL VERIFY ALL CONDITIONS AND MEASUREMENTS IN THE FIELD AND BE RESPONSIBLE FOR FIELD FIT AND QUANTITY OF WORK. NO ALLOWANCES SHALL BE MADE IN BEHALF OF THE CONTRACTOR FOR ANY ERROR OR NEGLECT ON HIS PART.

"THIS PLAN IS APPROVED ONLY FOR WORK INDICATED ON THE APPLICATION SPECIFICATION SHEET. ALL OTHER MATTERS SHOWN ARE NOT TO BE RELIED UPON, OR TO BE CONSIDERED AS EITHER BEING APPROVED OR IN ACCORDANCE WITH APPLICABLE CODES."

No.	Description	Date

PROJECT
36-37 31ST STREET
LONG ISLAND CITY, NY
11106

CELLAR FLOOR PLAN

SCALE : AS NOTED

SEAL: REGISTERED ARCHITECT ANTHONY J. MORALI 031783-1 STATE OF NEW YORK

Date	10.12.15
Project Number	1507
Drawn By	CI
Checked By	AM

A-100.00

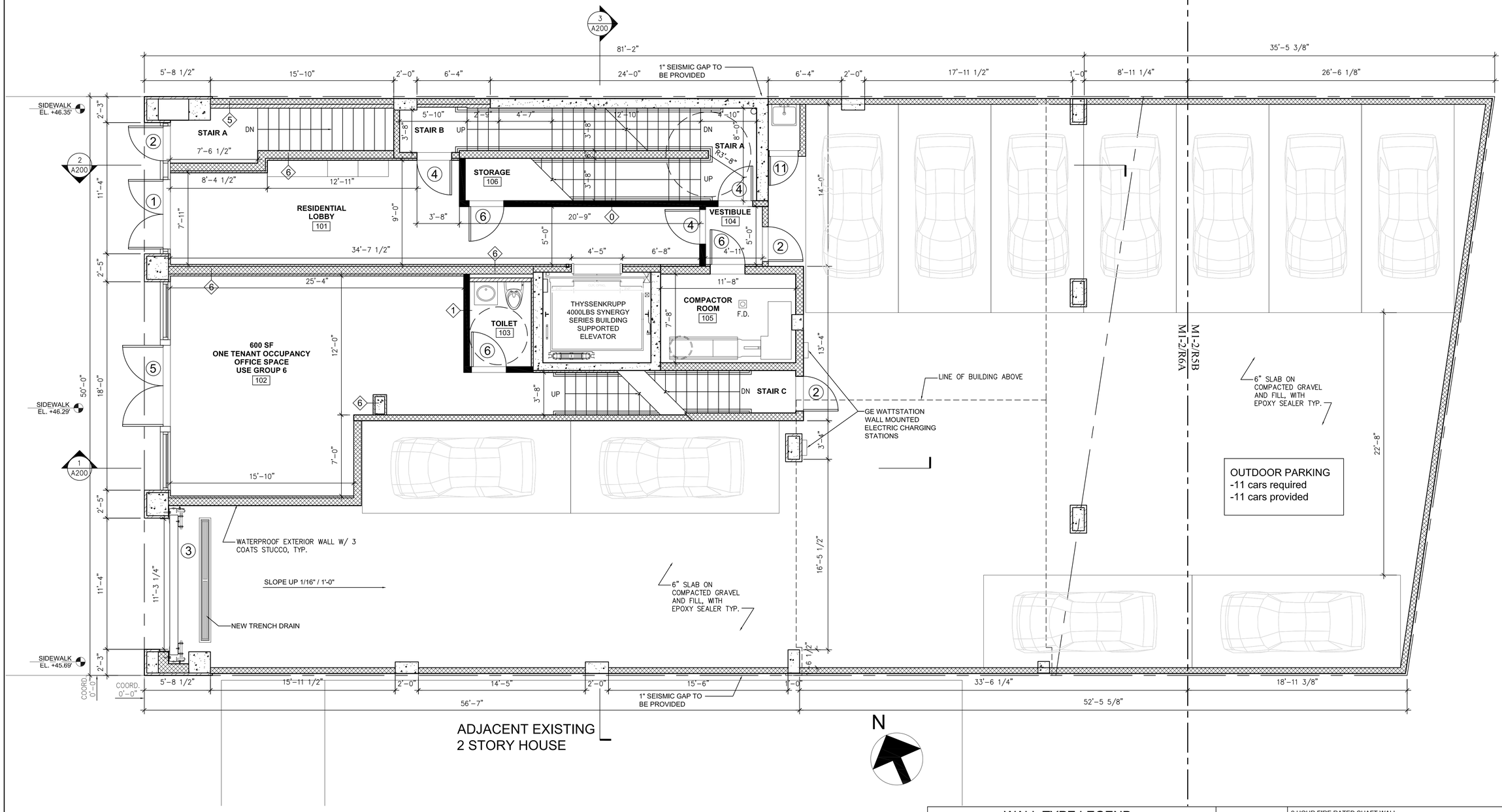

FIRST FLOOR PLAN
SCALE: 1/4" = 1'-0"

WALL TYPE LEGEND

	EXISTING MASONRY WALL TO REMAIN
	EXTERIOR WALL- ALUMINUM COMPOSITE METAL PANEL WITH 1" XPS INSULATION + (2) LAYERS OF 5/8" DENSE-GLASS GOLD ON EXTERIOR SIDE AND (1) LAYER OF 5/8" GYP. BD. ON INTERIOR SIDE OF 6" METAL STUDS, 16 GA. @ 16" O.C. W/4" BATT INSULATION TO UNDERSIDE OF CONCRETE SLAB
	CAST IN PLACE CONCRETE WALL
	CONCRETE MASONRY WALL
8	3 HOUR FIRE RATED 8" CMU PARTITION AT TRASH CHUTE
0	2 HOUR FIRE RATED PARTITION: MASONRY EQUIVALENT (1) LAYER OF 5/8" THK IMPACT RESISTANCE GYP. BD. AND (1) LAYER OF 5/8" THK GYP. BD ON BOTH SIDES OF 3 5/8" MTL STUD, 20 GA MIN. @ 16" O.C. W/ 4" BATT INSULATION TO UNDERSIDE OF CONCRETE SLAB
1	2 HOUR FIRE RATED PARTITION: (2) LAYER OF 5/8" THK TYPE 'X" GYP. BD. ON BOTH SIDES OF 3 5/8" MTL STUD @16" O.C. W/ 4" BATT INSULATION TO UNDERSIDE OF CONCRETE SLAB
2	2 HOUR FIRE RATED SHAFT WALL: (1) LAYER OF 5/8" THK TYPE 'X" GYP. BD. ON BOTH SIDES OF 2 1/2" MTL I STUDS W/ 1"X24" TYPE X GYPSUM PANEL INSERTED BETWEEN 2 1/2" FLOOR AND CEILING TRACK
3	2 HOUR FIRE RATED PARTITION: (2) LAYER OF 5/8" THK TYPE 'X" GYP. BD. ON INTERIOR SIDE OF 2 1/2" METAL STUDS @16" O.C. TO UNDERSIDE OF CONCRETE SLAB
4	1 HOUR FIRE RATED PARTITION: (1) LAYER OF 5/8" THK TYPE 'X" GYP. BD. ON BOTH SIDES OF 3 5/8" MTL STUD @16" O.C. W/ 4" BATT INSULATION TO UNDERSIDE OF CONCRETE SLAB
5	INTERIOR FURRING PARTITION: (1) LAYER OF 5/8" THK TYPE 'X" GYP. BD. ON INTERIOR SIDES OF 2 1/2" MTL STUD @16" O.C. W/ 2" BATT INSULATION TO UNDERSIDE OF CONCRETE SLAB
6	INTERIOR FURRING PARTITION: (1) LAYER OF 5/8" THK TYPE 'X" GYP. BD. ON INTERIOR SIDES OF 7/8" MTL FURRING STRIP @16" O.C. TO UNDERSIDE OF CONCRETE SLAB
7	INTERIOR KNEE WALL PARTITION: (1) LAYER OF 5/8" THK TYPE 'X" GYP. BD. ON BOTH SIDES OF 3 5/8" MTL STUDS @16" O.C. TO UNDERSIDE OF COUNTER TOP
11	INTERIOR CHASE WALL PARTITION: (1) LAYER OF 5/8" THK TYPE 'X" GYP. BD. ON 1 5/8" METAL STUDS @16" O.C. TO UNDERSIDE OF CONCRETE SLAB ON BOTH SIDES OF 4" CHASE SPACE

ARCHITECT:
MORALI ARCHITECT
505 8th AVENUE, SUITE 2202, NEW YORK, NY, 10018
TEL. 212 219 2091 E-MAIL: MSTUDIONY@AOL.COM

IMA ENGINEERING , PC
123-23 82 AVENUE, KEW GARDENS, NY, 11415 TEL: 718 268 8600

ADVANCED CLEANUP TECHNOLOGIES, INC.
110 MAIN STREET, SUITE 103, PORT WASHINGTON, NY, 11050

COPYRIGHT (C)
THESE PLAN ARE AN INSTRUMENT OF SERVICE AND ARE THE PROPERTY OF THE ARCHITECT.
This and all documents produced by this firm under this agreement shall remain the sole property of this firm and may not be used, copied, changed or distributed by the client or others without the written consent of this firm.
INFRINGEMENTS WILL BE PROSECUTED.

CONTRACTOR SHALL VERIFY ALL CONDITIONS AND MEASUREMENTS IN THE FIELD AND BE RESPONSIBLE FOR FIELD FIT AND QUANTITY OF WORK. NO ALLOWANCES SHALL BE MADE IN BEHALF OF THE CONTRACTOR FOR ANY ERROR OR NEGLECT ON HIS PART.

"THIS PLAN IS APPROVED ONLY FOR WORK INDICATED ON THE APPLICATION SPECIFICATION SHEET. ALL OTHER MATTERS SHOWN ARE NOT TO BE RELIED UPON, OR TO BE CONSIDERED AS EITHER BEING APPROVED OR IN ACCORDANCE WITH APPLICABLE CODES."

No.	Description	Date

PROJECT
36-37 31ST STREET
LONG ISLAND CITY, NY
11106

FIRST FLOOR PLAN

SCALE : AS NOTED

SEAL

Date	10.12.15
Project Number	1507
Drawn By	CI
Checked By	AM

A-101.00

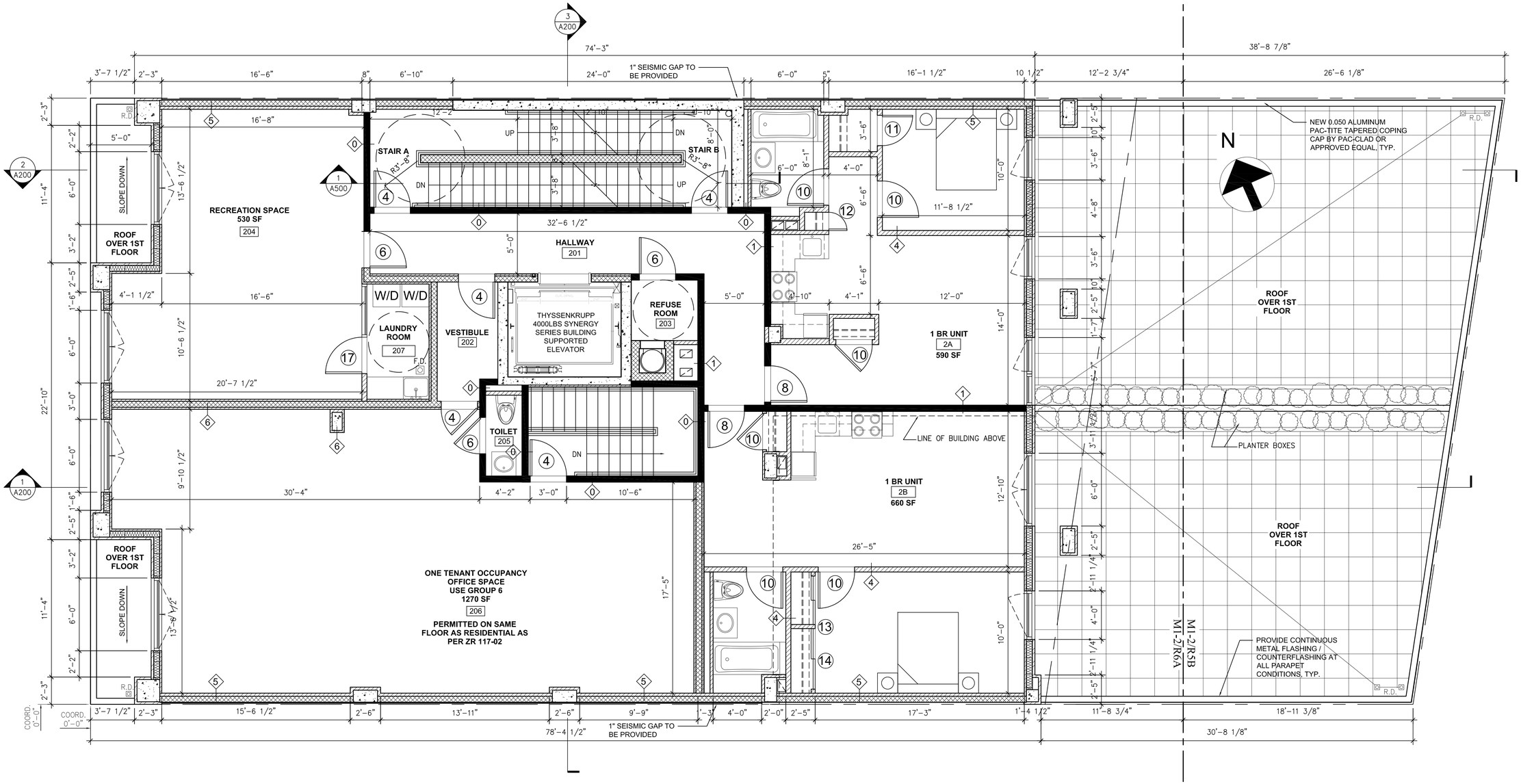

SECOND FLOOR PLAN
SCALE: 1/4" = 1'-0"

WALL TYPE LEGEND

	EXISTING MASONRY WALL TO REMAIN
	EXTERIOR WALL- ALUMINUM COMPOSITE METAL PANEL WITH 1" XPS INSULATION + (2) LAYERS OF 5/8" DENSE-GLASS GOLD ON EXTERIOR SIDE AND (1) LAYER OF 5/8" GYP. BD. ON INTERIOR SIDE OF 6" METAL STUDS, 16 GA. @ 16" O.C. W/4" BATT INSULATION TO UNDERSIDE OF CONCRETE SLAB
	CAST IN PLACE CONCRETE WALL
	CONCRETE MASONRY WALL
8	3 HOUR FIRE RATED 8" CMU PARTITION AT TRASH CHUTE
0	2 HOUR FIRE RATED PARTITION: MASONRY EQUIVALENT (1) LAYER OF 5/8" THK IMPACT RESISTANCE GYP. BD. AND (1) LAYER OF 5/8" THK GYP. BD ON BOTH SIDES OF 3 5/8" MTL STUD, 20 GA MIN. @ 16" O.C. W/ 4" BATT INSULATION TO UNDERSIDE OF CONCRETE SLAB
1	2 HOUR FIRE RATED PARTITION: (2) LAYER OF 5/8" THK TYPE 'X" GYP. BD. ON BOTH SIDES OF 3 5/8" MTL STUD @16" O.C. W/ 4" BATT INSULATION TO UNDERSIDE OF CONCRETE SLAB
2	2 HOUR FIRE RATED SHAFT WALL: (1) LAYER OF 5/8" THK TYPE 'X" GYP. BD. ON BOTH SIDES OF 2 1/2" MTL I STUDS W/ 1"X24" TYPE X GYPSUM PANEL INSERTED BETWEEN 2 1/2" FLOOR AND CEILING TRACK
3	2 HOUR FIRE RATED PARTITION: (2) LAYER OF 5/8" THK TYPE 'X" GYP. BD. ON INTERIOR SIDE OF 2 1/2" METAL STUDS @16" O.C. TO UNDERSIDE OF CONCRETE SLAB
4	1 HOUR FIRE RATED PARTITION: (1) LAYER OF 5/8" THK TYPE 'X" GYP. BD. ON BOTH SIDES OF 3 5/8" MTL STUD @16" O.C. W/ 4" BATT INSULATION TO UNDERSIDE OF CONCRETE SLAB
5	INTERIOR FURRING PARTITION: (1) LAYER OF 5/8" THK TYPE 'X" GYP. BD. ON INTERIOR SIDES OF 2 1/2" MTL STUD @16" O.C. W/ 2" BATT INSULATION TO UNDERSIDE OF CONCRETE SLAB
6	INTERIOR FURRING PARTITION: (1) LAYER OF 5/8" THK TYPE 'X" GYP. BD. ON INTERIOR SIDES OF 7/8" MTL FURRING STRIP @16" O.C. TO UNDERSIDE OF CONCRETE SLAB
7	INTERIOR KNEE WALL PARTITION: (1) LAYER OF 5/8" THK TYPE 'X" GYP. BD. ON BOTH SIDES OF 3 5/8" MTL STUDS @16" O.C. TO UNDERSIDE OF COUNTER TOP
17	INTERIOR CHASE WALL PARTITION: (1) LAYER OF 5/8" THK TYPE 'X" GYP. BD. ON 1 5/8" METAL STUDS @16" O.C. TO UNDERSIDE OF CONCRETE SLAB ON BOTH SIDES OF 4" CHASE SPACE

ARCHITECT:
MORALI ARCHITECT
505 8th AVENUE, SUITE 2202, NEW YORK, NY, 10018
TEL. 212 219 2091 E-MAIL: MSTUDIONY@AOL.COM

IMA ENGINEERING , PC
123-23 82 AVENUE, KEW GARDENS, NY, 11415 TEL: 718 268 8600

ADVANCED CLEANUP TECHNOLOGIES, INC.
110 MAIN STREET, SUITE 103, PORT WASHINGTON, NY, 11050

COPYRIGHT (C)
THESE PLAN ARE AN INSTRUMENT OF SERVICE AND ARE THE PROPERTY OF THE ARCHITECT.
This and all documents produced by this firm under this agreement shall remain the sole property of this firm and may not be used, copied, changed or distributed by the client or others without the written consent of this firm.
INFRINGEMENTS WILL BE PROSECUTED.

CONTRACTOR SHALL VERIFY ALL CONDITIONS AND MEASUREMENTS IN THE FIELD AND BE RESPONSIBLE FOR FIELD FIT AND QUANTITY OF WORK. NO ALLOWANCES SHALL BE MADE IN BEHALF OF THE CONTRACTOR FOR ANY ERROR OR NEGLECT ON HIS PART.

"THIS PLAN IS APPROVED ONLY FOR WORK INDICATED ON THE APPLICATION SPECIFICATION SHEET. ALL OTHER MATTERS SHOWN ARE NOT TO BE RELIED UPON, OR TO BE CONSIDERED AS EITHER BEING APPROVED OR IN ACCORDANCE WITH APPLICABLE CODES."

No.	Description	Date

PROJECT
36-37 31ST STREET
LONG ISLAND CITY, NY
11106

SECOND FLOOR PLAN

SCALE : AS NOTED

SEAL: REGISTERED ARCHITECT ANTHONY J. MORALI 019683-1 STATE OF NEW YORK

Date	10.12.15
Project Number	1507
Drawn By	CI
Checked By	AM

A-102.00

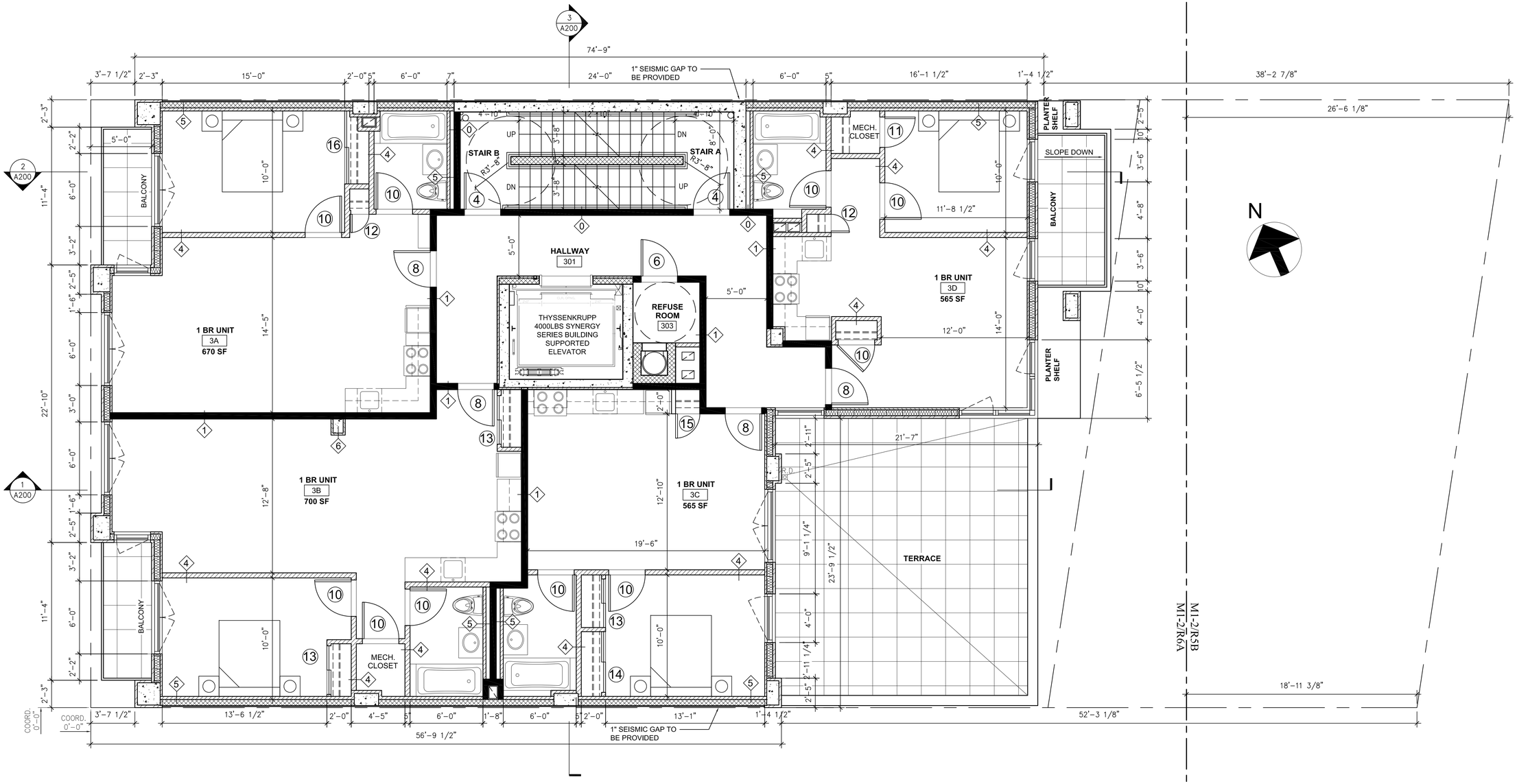

THIRD FLOOR PLAN
SCALE: 1/4" = 1'-0"

WALL TYPE LEGEND

	EXISTING MASONRY WALL TO REMAIN
	EXTERIOR WALL- ALUMINUM COMPOSITE METAL PANEL WITH 1" XPS INSULATION + (2) LAYERS OF 5/8" DENSE-GLASS GOLD ON EXTERIOR SIDE AND (1) LAYER OF 5/8" GYP. BD. ON INTERIOR SIDE OF 6" METAL STUDS, 16 GA. @ 16" O.C. W/4" BATT INSULATION TO UNDERSIDE OF CONCRETE SLAB
	CAST IN PLACE CONCRETE WALL
	CONCRETE MASONRY WALL
8	3 HOUR FIRE RATED 8" CMU PARTITION AT TRASH CHUTE
0	2 HOUR FIRE RATED PARTITION: MASONRY EQUIVALENT (1) LAYER OF 5/8" THK IMPACT RESISTANCE GYP. BD. AND (1) LAYER OF 5/8" THK GYP. BD ON BOTH SIDES OF 3 5/8" MTL STUD, 20 GA MIN. @ 16" O.C. W/ 4" BATT INSULATION TO UNDERSIDE OF CONCRETE SLAB
1	2 HOUR FIRE RATED PARTITION: (2) LAYER OF 5/8" THK TYPE 'X" GYP. BD. ON BOTH SIDES OF 3 5/8" MTL STUD @16" O.C. W/ 4" BATT INSULATION TO UNDERSIDE OF CONCRETE SLAB
2	2 HOUR FIRE RATED SHAFT WALL: (1) LAYER OF 5/8" THK TYPE 'X" GYP. BD. ON BOTH SIDES OF 2 1/2" MTL I STUDS W/ 1"X24" TYPE X GYPSUM PANEL INSERTED BETWEEN 2 1/2" FLOOR AND CEILING TRACK
3	2 HOUR FIRE RATED PARTITION: (2) LAYER OF 5/8" THK TYPE 'X" GYP. BD. ON INTERIOR SIDE OF 2 1/2" METAL STUDS @16" O.C. TO UNDERSIDE OF CONCRETE SLAB
4	1 HOUR FIRE RATED PARTITION: (1) LAYER OF 5/8" THK TYPE 'X" GYP. BD. ON BOTH SIDES OF 3 5/8" MTL STUD @16" O.C. W/ 4" BATT INSULATION TO UNDERSIDE OF CONCRETE SLAB
5	INTERIOR FURRING PARTITION: (1) LAYER OF 5/8" THK TYPE 'X" GYP. BD. ON INTERIOR SIDES OF 2 1/2" MTL STUD @16" O.C. W/ 2" BATT INSULATION TO UNDERSIDE OF CONCRETE SLAB
6	INTERIOR FURRING PARTITION: (1) LAYER OF 5/8" THK TYPE 'X" GYP. BD. ON INTERIOR SIDES OF 7/8" MTL FURRING STRIP @16" O.C. TO UNDERSIDE OF CONCRETE SLAB
7	INTERIOR KNEE WALL PARTITION: (1) LAYER OF 5/8" THK TYPE 'X" GYP. BD. ON BOTH SIDES OF 3 5/8" MTL STUDS @16" O.C. TO UNDERSIDE OF COUNTER TOP
13	INTERIOR CHASE WALL PARTITION: (1) LAYER OF 5/8" THK TYPE 'X" GYP. BD. ON 1 5/8" METAL STUDS @16" O.C. TO UNDERSIDE OF CONCRETE SLAB ON BOTH SIDES OF 4" CHASE SPACE

ARCHITECT:
MORALI ARCHITECT
505 8th AVENUE, SUITE 2202, NEW YORK, NY, 10018
TEL. 212 219 2091 E-MAIL: MSTUDIONY@AOL.COM

IMA ENGINEERING , PC
123-23 82 AVENUE, KEW GARDENS, NY, 11415 TEL: 718 268 8600

ADVANCED CLEANUP TECHNOLOGIES, INC.
110 MAIN STREET, SUITE 103, PORT WASHINGTON, NY, 11050

COPYRIGHT (C)
THESE PLAN ARE AN INSTRUMENT OF SERVICE AND ARE THE PROPERTY OF THE ARCHITECT.
This and all documents produced by this firm under this agreement shall remain the sole property of this firm and may not be used, copied, changed or distributed by the client or others without the written consent of this firm.
INFRINGEMENTS WILL BE PROSECUTED.

CONTRACTOR SHALL VERIFY ALL CONDITIONS AND MEASUREMENTS IN THE FIELD AND BE RESPONSIBLE FOR FIELD FIT AND QUANTITY OF WORK. NO ALLOWANCES SHALL BE MADE IN BEHALF OF THE CONTRACTOR FOR ANY ERROR OR NEGLECT ON HIS PART.

"THIS PLAN IS APPROVED ONLY FOR WORK INDICATED ON THE APPLICATION SPECIFICATION SHEET. ALL OTHER MATTERS SHOWN ARE NOT TO BE RELIED UPON, OR TO BE CONSIDERED AS EITHER BEING APPROVED OR IN ACCORDANCE WITH APPLICABLE CODES."

No.	Description	Date

PROJECT
36-37 31ST STREET
LONG ISLAND CITY, NY
11106

THIRD FLOOR PLAN

SCALE : AS NOTED

Date	10.12.15
Project Number	1507
Drawn By	CI
Checked By	AM

A-103.00

PAGE # 12 OF 46

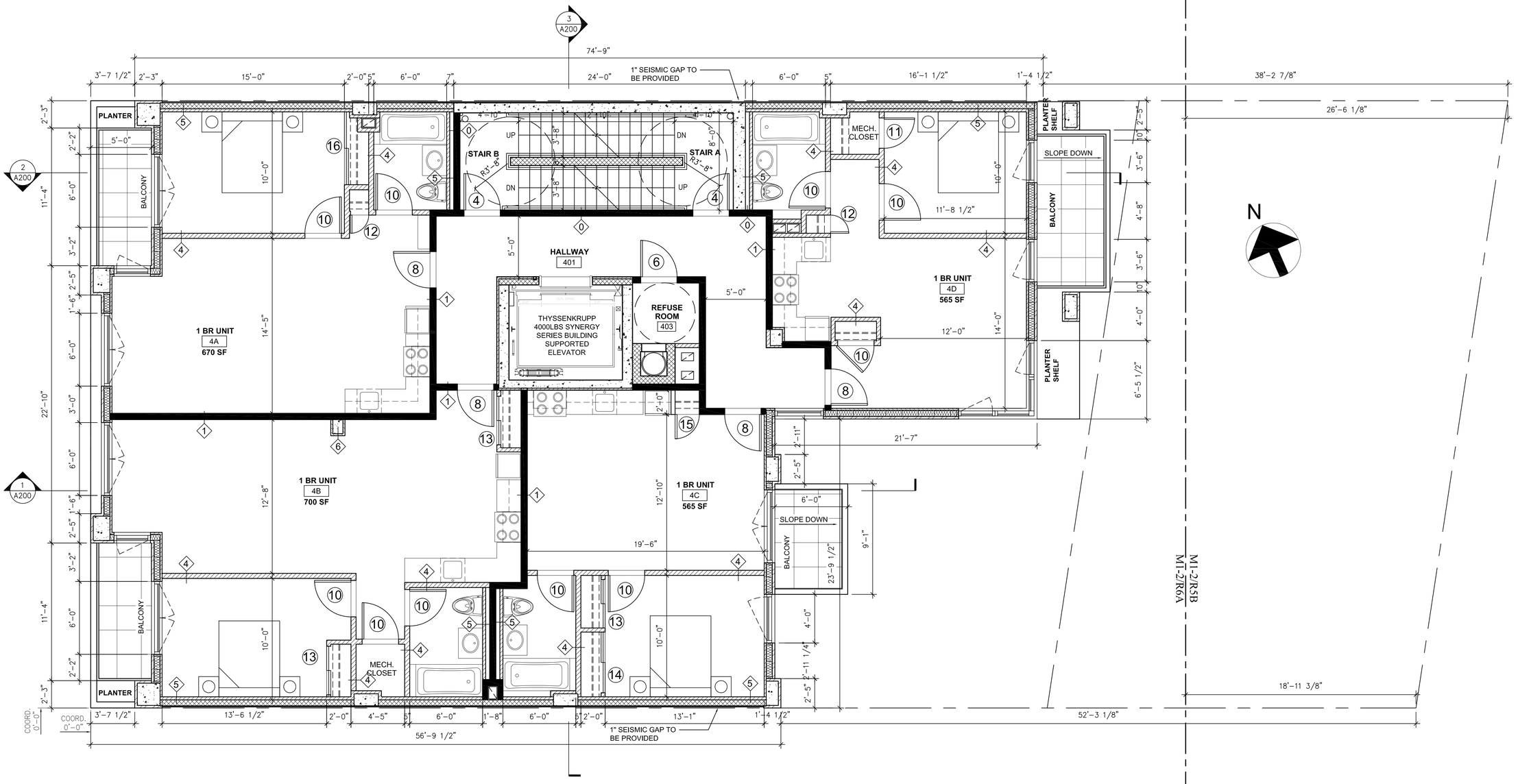

FOURTH FLOOR PLAN
SCALE: 1/4" = 1'-0"

WALL TYPE LEGEND

	EXISTING MASONRY WALL TO REMAIN
	EXTERIOR WALL- ALUMINUM COMPOSITE METAL PANEL WITH 1" XPS INSULATION + (2) LAYERS OF 5/8" DENSE-GLASS GOLD ON EXTERIOR SIDE AND (1) LAYER OF 5/8" GYP. BD. ON INTERIOR SIDE OF 6" METAL STUDS, 16 GA. @ 16" O.C. W/4" BATT INSULATION TO UNDERSIDE OF CONCRETE SLAB
	CAST IN PLACE CONCRETE WALL
	CONCRETE MASONRY WALL
8	3 HOUR FIRE RATED 8" CMU PARTITION AT TRASH CHUTE
0	2 HOUR FIRE RATED PARTITION: MASONRY EQUIVALENT (1) LAYER OF 5/8" THK IMPACT RESISTANCE GYP. BD. AND (1) LAYER OF 5/8" THK GYP. BD ON BOTH SIDES OF 3 5/8" MTL STUD, 20 GA MIN. @ 16" O.C. W/ 4" BATT INSULATION TO UNDERSIDE OF CONCRETE SLAB
1	2 HOUR FIRE RATED PARTITION: (2) LAYER OF 5/8" THK TYPE 'X" GYP. BD. ON BOTH SIDES OF 3 5/8" MTL STUD @16" O.C. W/ 4" BATT INSULATION TO UNDERSIDE OF CONCRETE SLAB
2	2 HOUR FIRE RATED SHAFT WALL: (1) LAYER OF 5/8" THK TYPE 'X" GYP. BD. ON BOTH SIDES OF 2 1/2" MTL I STUDS W/ 1"X24" TYPE X GYPSUM PANEL INSERTED BETWEEN 2 1/2" FLOOR AND CEILING TRACK
3	2 HOUR FIRE RATED PARTITION: (2) LAYER OF 5/8" THK TYPE 'X" GYP. BD. ON INTERIOR SIDE OF 2 1/2" METAL STUDS @16" O.C. TO UNDERSIDE OF CONCRETE SLAB
4	1 HOUR FIRE RATED PARTITION: (1) LAYER OF 5/8" THK TYPE 'X" GYP. BD. ON BOTH SIDES OF 3 5/8" MTL STUD @16" O.C. W/ 4" BATT INSULATION TO UNDERSIDE OF CONCRETE SLAB
5	INTERIOR FURRING PARTITION: (1) LAYER OF 5/8" THK TYPE 'X" GYP. BD. ON INTERIOR SIDES OF 2 1/2" MTL STUD @16" O.C. W/ 2" BATT INSULATION TO UNDERSIDE OF CONCRETE SLAB
6	INTERIOR FURRING PARTITION: (1) LAYER OF 5/8" THK TYPE 'X" GYP. BD. ON INTERIOR SIDES OF 7/8" MTL FURRING STRIP @16" O.C. TO UNDERSIDE OF CONCRETE SLAB
7	INTERIOR KNEE WALL PARTITION: (1) LAYER OF 5/8" THK TYPE 'X" GYP. BD. ON BOTH SIDES OF 3 5/8" MTL STUDS @16" O.C. TO UNDERSIDE OF COUNTER TOP
11	INTERIOR CHASE WALL PARTITION: (1) LAYER OF 5/8" THK TYPE 'X" GYP. BD. ON 1 5/8" METAL STUDS @16" O.C. TO UNDERSIDE OF CONCRETE SLAB ON BOTH SIDES OF 4" CHASE SPACE

ARCHITECT:
MORALI ARCHITECT
505 8th AVENUE, SUITE 2202, NEW YORK, NY, 10018
TEL. 212 219 2091 E-MAIL: MSTUDIONY@AOL.COM

IMA ENGINEERING , PC
123-23 82 AVENUE, KEW GARDENS, NY, 11415 TEL: 718 268 8600

ADVANCED CLEANUP TECHNOLOGIES, INC.
110 MAIN STREET, SUITE 103, PORT WASHINGTON, NY, 11050

COPYRIGHT (C)
THESE PLAN ARE AN INSTRUMENT OF SERVICE AND ARE THE PROPERTY OF THE ARCHITECT.
This and all documents produced by this firm under this agreement shall remain the sole property of this firm and may not be used, copied, changed or distributed by the client or others without the written consent of this firm.
INFRINGEMENTS WILL BE PROSECUTED.

CONTRACTOR SHALL VERIFY ALL CONDITIONS AND MEASUREMENTS IN THE FIELD AND BE RESPONSIBLE FOR FIELD FIT AND QUANTITY OF WORK. NO ALLOWANCES SHALL BE MADE IN BEHALF OF THE CONTRACTOR FOR ANY ERROR OR NEGLECT ON HIS PART.

"THIS PLAN IS APPROVED ONLY FOR WORK INDICATED ON THE APPLICATION SPECIFICATION SHEET. ALL OTHER MATTERS SHOWN ARE NOT TO BE RELIED UPON, OR TO BE CONSIDERED AS EITHER BEING APPROVED OR IN ACCORDANCE WITH APPLICABLE CODES."

No.	Description	Date

PROJECT
36-37 31ST STREET
LONG ISLAND CITY, NY
11106

FOURTH FLOOR PLAN

SCALE : AS NOTED

SEAL: REGISTERED ARCHITECT ANTHONY J. MORALI 031883-1 STATE OF NEW YORK

Date	10.12.15
Project Number	1507
Drawn By	CI
Checked By	AM

A-104.00

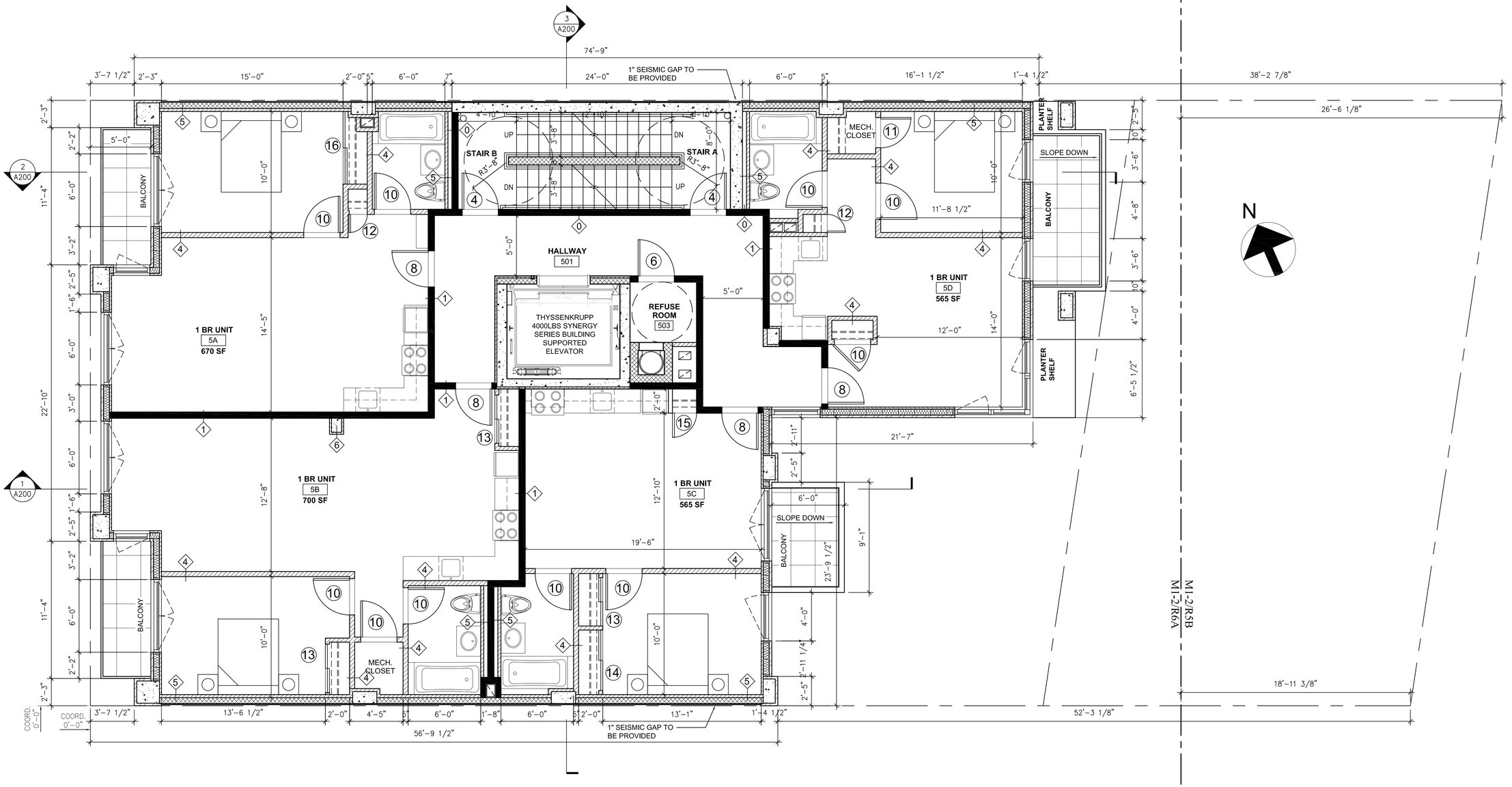

FIFTH FLOOR PLAN
SCALE: 1/4" = 1'-0"

WALL TYPE LEGEND

	EXISTING MASONRY WALL TO REMAIN
	EXTERIOR WALL- ALUMINUM COMPOSITE METAL PANEL WITH 1" XPS INSULATION + (2) LAYERS OF 5/8" DENSE-GLASS GOLD ON EXTERIOR SIDE AND (1) LAYER OF 5/8" GYP. BD. ON INTERIOR SIDE OF 6" METAL STUDS, 16 GA. @ 16" O.C. W/4" BATT INSULATION TO UNDERSIDE OF CONCRETE SLAB
	CAST IN PLACE CONCRETE WALL
	CONCRETE MASONRY WALL
8	3 HOUR FIRE RATED 8" CMU PARTITION AT TRASH CHUTE
0	2 HOUR FIRE RATED PARTITION: MASONRY EQUIVALENT (1) LAYER OF 5/8" THK IMPACT RESISTANCE GYP. BD. AND (1) LAYER OF 5/8" THK GYP. BD ON BOTH SIDES OF 3 5/8" MTL STUD, 20 GA MIN. @ 16" O.C. W/ 4" BATT INSULATION TO UNDERSIDE OF CONCRETE SLAB
1	2 HOUR FIRE RATED PARTITION: (2) LAYER OF 5/8" THK TYPE 'X" GYP. BD. ON BOTH SIDES OF 3 5/8" MTL STUD @16" O.C. W/ 4" BATT INSULATION TO UNDERSIDE OF CONCRETE SLAB
2	2 HOUR FIRE RATED SHAFT WALL: (1) LAYER OF 5/8" THK TYPE 'X" GYP. BD. ON BOTH SIDES OF 2 1/2" MTL I STUDS W/ 1"X24" TYPE X GYPSUM PANEL INSERTED BETWEEN 2 1/2" FLOOR AND CEILING TRACK
3	2 HOUR FIRE RATED PARTITION: (2) LAYER OF 5/8" THK TYPE 'X" GYP. BD. ON INTERIOR SIDE OF 2 1/2" METAL STUDS @16" O.C. TO UNDERSIDE OF CONCRETE SLAB
4	1 HOUR FIRE RATED PARTITION: (1) LAYER OF 5/8" THK TYPE 'X" GYP. BD. ON BOTH SIDES OF 3 5/8" MTL STUD @16" O.C. W/ 4" BATT INSULATION TO UNDERSIDE OF CONCRETE SLAB
5	INTERIOR FURRING PARTITION: (1) LAYER OF 5/8" THK TYPE 'X" GYP. BD. ON INTERIOR SIDES OF 2 1/2" MTL STUD @16" O.C. W/ 2" BATT INSULATION TO UNDERSIDE OF CONCRETE SLAB
6	INTERIOR FURRING PARTITION: (1) LAYER OF 5/8" THK TYPE 'X" GYP. BD. ON INTERIOR SIDES OF 7/8" MTL FURRING STRIP @16" O.C. TO UNDERSIDE OF CONCRETE SLAB
7	INTERIOR KNEE WALL PARTITION: (1) LAYER OF 5/8" THK TYPE 'X" GYP. BD. ON BOTH SIDES OF 3 5/8" MTL STUDS @16" O.C. TO UNDERSIDE OF COUNTER TOP
13	INTERIOR CHASE WALL PARTITION: (1) LAYER OF 5/8" THK TYPE 'X" GYP. BD. ON 1 5/8" METAL STUDS @16" O.C. TO UNDERSIDE OF CONCRETE SLAB ON BOTH SIDES OF 4" CHASE SPACE

ARCHITECT:
MORALI ARCHITECT
505 8th AVENUE, SUITE 2202, NEW YORK, NY, 10018
TEL. 212 219 2091 E-MAIL: MSTUDIONY@AOL.COM

IMA ENGINEERING , PC
123-23 82 AVENUE, KEW GARDENS, NY, 11415 TEL: 718 268 8600

ADVANCED CLEANUP TECHNOLOGIES, INC.
110 MAIN STREET, SUITE 103, PORT WASHINGTON, NY, 11050

COPYRIGHT (C)
THESE PLAN ARE AN INSTRUMENT OF SERVICE AND ARE THE PROPERTY OF THE ARCHITECT.
This and all documents produced by this firm under this agreement shall remain the sole property of this firm and may not be used, copied, changed or distributed by the client or others without the written consent of this firm.
INFRINGEMENTS WILL BE PROSECUTED.

CONTRACTOR SHALL VERIFY ALL CONDITIONS AND MEASUREMENTS IN THE FIELD AND BE RESPONSIBLE FOR FIELD FIT AND QUANTITY OF WORK. NO ALLOWANCES SHALL BE MADE IN BEHALF OF THE CONTRACTOR FOR ANY ERROR OR NEGLECT ON HIS PART.

"THIS PLAN IS APPROVED ONLY FOR WORK INDICATED ON THE APPLICATION SPECIFICATION SHEET. ALL OTHER MATTERS SHOWN ARE NOT TO BE RELIED UPON, OR TO BE CONSIDERED AS EITHER BEING APPROVED OR IN ACCORDANCE WITH APPLICABLE CODES."

No.	Description	Date

PROJECT
36-37 31ST STREET
LONG ISLAND CITY, NY
11106

FIFTH FLOOR PLAN

SCALE : AS NOTED

REGISTERED ARCHITECT ANTHONY J. MORALI 027883-1 STATE OF NEW YORK

Date	10.12.15
Project Number	1507
Drawn By	CI
Checked By	AM

A-105.00

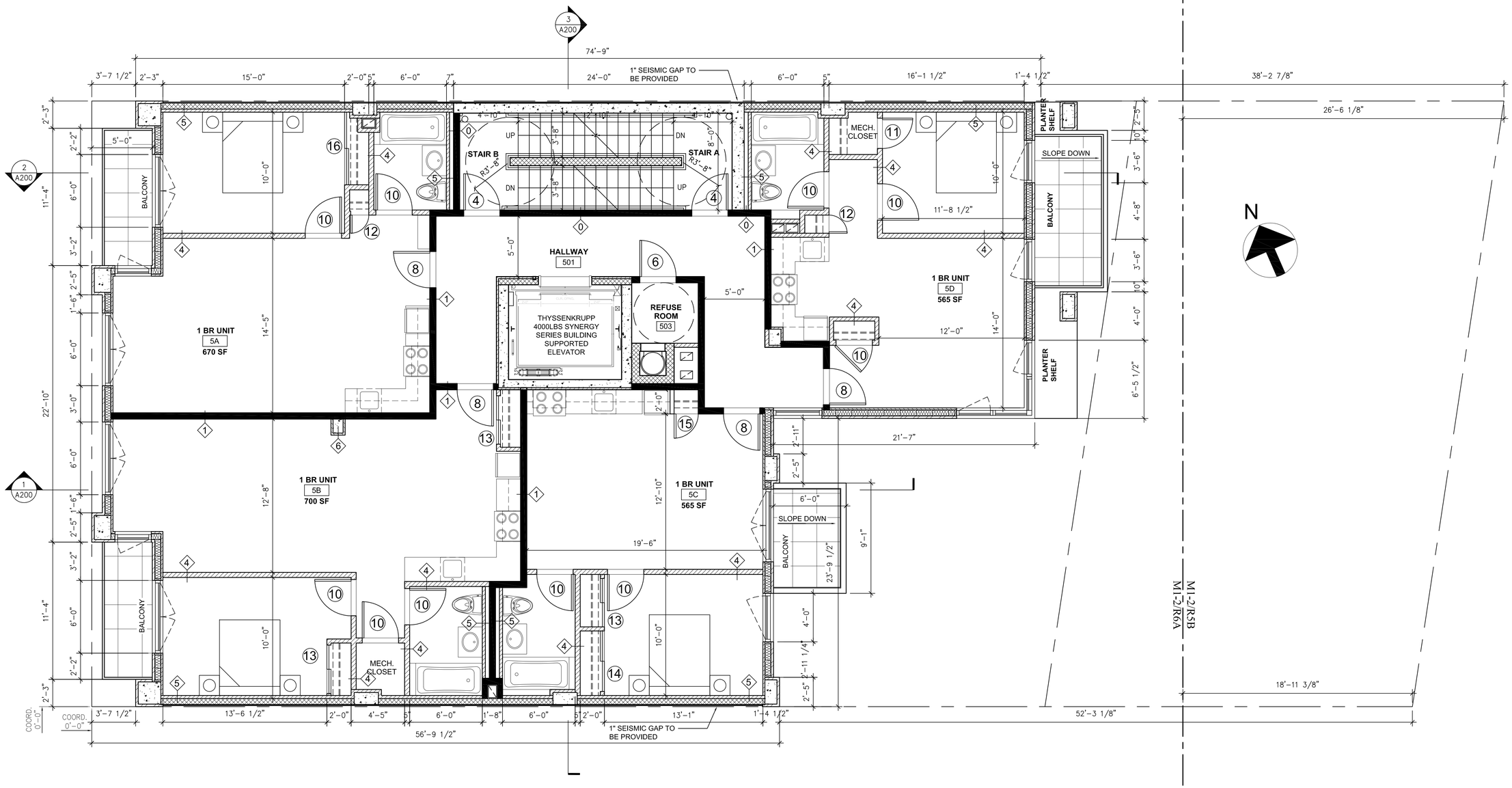

SIXTH FLOOR PLAN
SCALE: 1/4" = 1'-0"

WALL TYPE LEGEND

	EXISTING MASONRY WALL TO REMAIN
	EXTERIOR WALL- ALUMINUM COMPOSITE METAL PANEL WITH 1" XPS INSULATION + (2) LAYERS OF 5/8" DENSE-GLASS GOLD ON EXTERIOR SIDE AND (1) LAYER OF 5/8" GYP. BD. ON INTERIOR SIDE OF 6" METAL STUDS, 16 GA. @ 16" O.C. W/4" BATT INSULATION TO UNDERSIDE OF CONCRETE SLAB
	CAST IN PLACE CONCRETE WALL
	CONCRETE MASONRY WALL
8	3 HOUR FIRE RATED 8" CMU PARTITION AT TRASH CHUTE
0	2 HOUR FIRE RATED PARTITION: MASONRY EQUIVALENT (1) LAYER OF 5/8" THK IMPACT RESISTANCE GYP. BD. AND (1) LAYER OF 5/8" THK GYP. BD ON BOTH SIDES OF 3 5/8" MTL STUD, 20 GA MIN. @ 16" O.C. W/ 4" BATT INSULATION TO UNDERSIDE OF CONCRETE SLAB
1	2 HOUR FIRE RATED PARTITION: (2) LAYER OF 5/8" THK TYPE 'X" GYP. BD. ON BOTH SIDES OF 3 5/8" MTL STUD @16" O.C. W/ 4" BATT INSULATION TO UNDERSIDE OF CONCRETE SLAB
2	2 HOUR FIRE RATED SHAFT WALL: (1) LAYER OF 5/8" THK TYPE 'X" GYP. BD. ON BOTH SIDES OF 2 1/2" MTL I STUDS W/ 1"X24" TYPE X GYPSUM PANEL INSERTED BETWEEN 2 1/2" FLOOR AND CEILING TRACK
3	2 HOUR FIRE RATED PARTITION: (2) LAYER OF 5/8" THK TYPE 'X" GYP. BD. ON INTERIOR SIDE OF 2 1/2" METAL STUDS @16" O.C. TO UNDERSIDE OF CONCRETE SLAB
4	1 HOUR FIRE RATED PARTITION: (1) LAYER OF 5/8" THK TYPE 'X" GYP. BD. ON BOTH SIDES OF 3 5/8" MTL STUD @16" O.C. W/ 4" BATT INSULATION TO UNDERSIDE OF CONCRETE SLAB
5	INTERIOR FURRING PARTITION: (1) LAYER OF 5/8" THK TYPE 'X" GYP. BD. ON INTERIOR SIDES OF 2 1/2" MTL STUD @16" O.C. W/ 2" BATT INSULATION TO UNDERSIDE OF CONCRETE SLAB
6	INTERIOR FURRING PARTITION: (1) LAYER OF 5/8" THK TYPE 'X" GYP. BD. ON INTERIOR SIDES OF 7/8" MTL FURRING STRIP @16" O.C. TO UNDERSIDE OF CONCRETE SLAB
7	INTERIOR KNEE WALL PARTITION: (1) LAYER OF 5/8" THK TYPE 'X" GYP. BD. ON BOTH SIDES OF 3 5/8" MTL STUDS @16" O.C. TO UNDERSIDE OF COUNTER TOP
13	INTERIOR CHASE WALL PARTITION: (1) LAYER OF 5/8" THK TYPE 'X" GYP. BD. ON 1 5/8" METAL STUDS @16" O.C. TO UNDERSIDE OF CONCRETE SLAB ON BOTH SIDES OF 4" CHASE SPACE

ARCHITECT:
MORALI ARCHITECT
505 8th AVENUE, SUITE 2202, NEW YORK, NY, 10018
TEL. 212 219 2091 E-MAIL: MSTUDIONY@AOL.COM

IMA ENGINEERING , PC
123-23 82 AVENUE, KEW GARDENS, NY, 11415 TEL: 718 268 8600

ADVANCED CLEANUP TECHNOLOGIES, INC.
110 MAIN STREET, SUITE 103, PORT WASHINGTON, NY, 11050

COPYRIGHT (C)
THESE PLAN ARE AN INSTRUMENT OF SERVICE AND ARE THE PROPERTY OF THE ARCHITECT.
This and all documents produced by this firm under this agreement shall remain the sole property of this firm and may not be used, copied, changed or distributed by the client or others without the written consent of this firm.
INFRINGEMENTS WILL BE PROSECUTED.

CONTRACTOR SHALL VERIFY ALL CONDITIONS AND MEASUREMENTS IN THE FIELD AND BE RESPONSIBLE FOR FIELD FIT AND QUANTITY OF WORK. NO ALLOWANCES SHALL BE MADE IN BEHALF OF THE CONTRACTOR FOR ANY ERROR OR NEGLECT ON HIS PART.

"THIS PLAN IS APPROVED ONLY FOR WORK INDICATED ON THE APPLICATION SPECIFICATION SHEET. ALL OTHER MATTERS SHOWN ARE NOT TO BE RELIED UPON, OR TO BE CONSIDERED AS EITHER BEING APPROVED OR IN ACCORDANCE WITH APPLICABLE CODES."

No.	Description	Date

PROJECT
36-37 31ST STREET
LONG ISLAND CITY, NY
11106

SIXTH FLOOR PLAN

SCALE : AS NOTED

SEAL

Date	10.12.15
Project Number	1507
Drawn By	CI
Checked By	AM

A-106.00

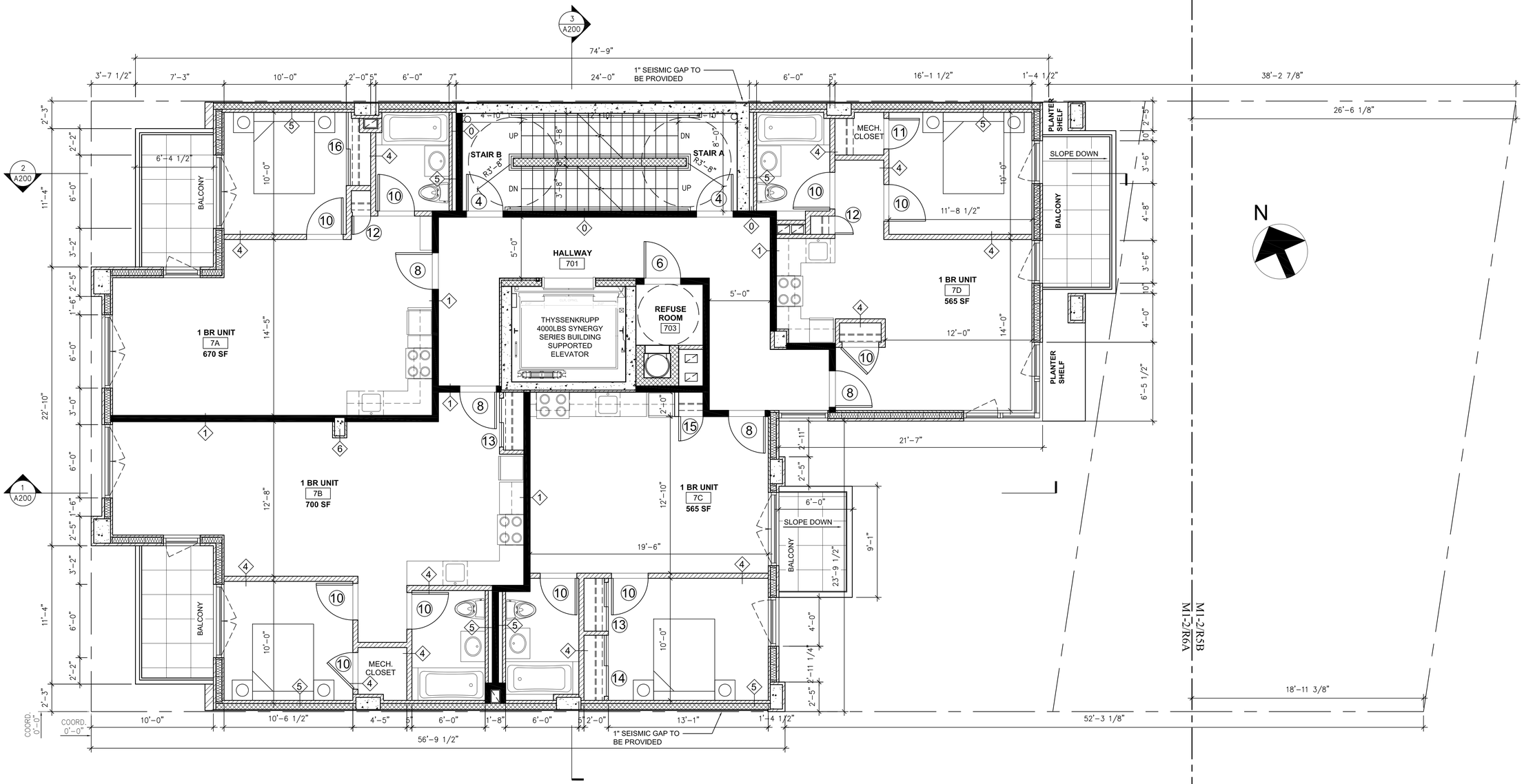

SEVENTH FLOOR PLAN
SCALE: 1/4" = 1'-0"

WALL TYPE LEGEND

	EXISTING MASONRY WALL TO REMAIN
	EXTERIOR WALL- ALUMINUM COMPOSITE METAL PANEL WITH 1" XPS INSULATION + (2) LAYERS OF 5/8" DENSE-GLASS GOLD ON EXTERIOR SIDE AND (1) LAYER OF 5/8" GYP. BD. ON INTERIOR SIDE OF 6" METAL STUDS, 16 GA. @ 16" O.C. W/4" BATT INSULATION TO UNDERSIDE OF CONCRETE SLAB
	CAST IN PLACE CONCRETE WALL
	CONCRETE MASONRY WALL
8	3 HOUR FIRE RATED 8" CMU PARTITION AT TRASH CHUTE
0	2 HOUR FIRE RATED PARTITION: MASONRY EQUIVALENT (1) LAYER OF 5/8" THK IMPACT RESISTANCE GYP. BD. AND (1) LAYER OF 5/8" THK GYP. BD ON BOTH SIDES OF 3 5/8" MTL STUD, 20 GA MIN. @ 16" O.C. W/ 4" BATT INSULATION TO UNDERSIDE OF CONCRETE SLAB
1	2 HOUR FIRE RATED PARTITION: (2) LAYER OF 5/8" THK TYPE 'X" GYP. BD. ON BOTH SIDES OF 3 5/8" MTL STUD @16" O.C. W/ 4" BATT INSULATION TO UNDERSIDE OF CONCRETE SLAB
2	2 HOUR FIRE RATED SHAFT WALL: (1) LAYER OF 5/8" THK TYPE 'X" GYP. BD. ON BOTH SIDES OF 2 1/2" MTL I STUDS W/ 1"X24" TYPE X GYPSUM PANEL INSERTED BETWEEN 2 1/2" FLOOR AND CEILING TRACK
3	2 HOUR FIRE RATED PARTITION: (2) LAYER OF 5/8" THK TYPE 'X" GYP. BD. ON INTERIOR SIDE OF 2 1/2" METAL STUDS @16" O.C. TO UNDERSIDE OF CONCRETE SLAB
4	1 HOUR FIRE RATED PARTITION: (1) LAYER OF 5/8" THK TYPE 'X" GYP. BD. ON BOTH SIDES OF 3 5/8" MTL STUD @16" O.C. W/ 4" BATT INSULATION TO UNDERSIDE OF CONCRETE SLAB
5	INTERIOR FURRING PARTITION: (1) LAYER OF 5/8" THK TYPE 'X" GYP. BD. ON INTERIOR SIDES OF 2 1/2" MTL STUD @16" O.C. W/ 2" BATT INSULATION TO UNDERSIDE OF CONCRETE SLAB
6	INTERIOR FURRING PARTITION: (1) LAYER OF 5/8" THK TYPE 'X" GYP. BD. ON INTERIOR SIDES OF 7/8" MTL FURRING STRIP @16" O.C. TO UNDERSIDE OF CONCRETE SLAB
7	INTERIOR KNEE WALL PARTITION: (1) LAYER OF 5/8" THK TYPE 'X" GYP. BD. ON BOTH SIDES OF 3 5/8" MTL STUDS @16" O.C. TO UNDERSIDE OF COUNTER TOP
14	INTERIOR CHASE WALL PARTITION: (1) LAYER OF 5/8" THK TYPE 'X" GYP. BD. ON 1 5/8" METAL STUDS @16" O.C. TO UNDERSIDE OF CONCRETE SLAB ON BOTH SIDES OF 4" CHASE SPACE

ARCHITECT:
MORALI ARCHITECT
505 8th AVENUE, SUITE 2202, NEW YORK, NY, 10018
TEL. 212 219 2091 E-MAIL: MSTUDIONY@AOL.COM

IMA ENGINEERING , PC
123-23 82 AVENUE, KEW GARDENS, NY, 11415 TEL: 718 268 8600

ADVANCED CLEANUP TECHNOLOGIES, INC.
110 MAIN STREET, SUITE 103, PORT WASHINGTON, NY, 11050

COPYRIGHT (C)
THESE PLAN ARE AN INSTRUMENT OF SERVICE AND ARE THE PROPERTY OF THE ARCHITECT.
This and all documents produced by this firm under this agreement shall remain the sole property of this firm and may not be used, copied, changed or distributed by the client or others without the written consent of this firm.
INFRINGEMENTS WILL BE PROSECUTED.

CONTRACTOR SHALL VERIFY ALL CONDITIONS AND MEASUREMENTS IN THE FIELD AND BE RESPONSIBLE FOR FIELD FIT AND QUANTITY OF WORK. NO ALLOWANCES SHALL BE MADE IN BEHALF OF THE CONTRACTOR FOR ANY ERROR OR NEGLECT ON HIS PART.

"THIS PLAN IS APPROVED ONLY FOR WORK INDICATED ON THE APPLICATION SPECIFICATION SHEET. ALL OTHER MATTERS SHOWN ARE NOT TO BE RELIED UPON, OR TO BE CONSIDERED AS EITHER BEING APPROVED OR IN ACCORDANCE WITH APPLICABLE CODES."

No.	Description	Date

PROJECT
36-37 31ST STREET
LONG ISLAND CITY, NY
11106

SEVENTH FLOOR PLAN

SCALE : AS NOTED

SEAL
REGISTERED ARCHITECT
ANTHONY J. MORALI
STATE OF NEW YORK
No. 017683-1

Date	10.12.15
Project Number	1507
Drawn By	CI
Checked By	AM

A-107.00

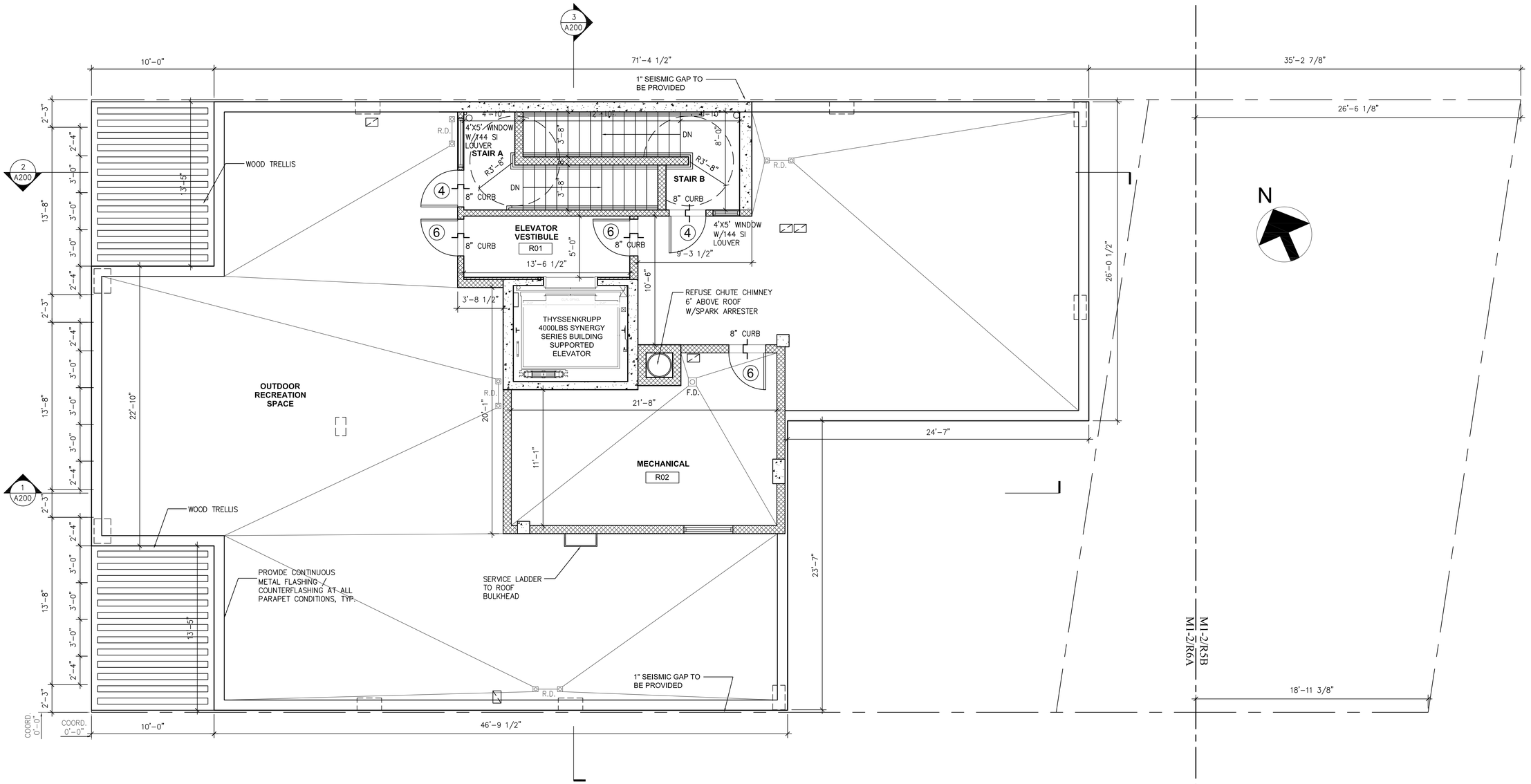

ROOF FLOOR PLAN
SCALE: 1/4" = 1'-0"

WALL TYPE LEGEND

	EXISTING MASONRY WALL TO REMAIN
	EXTERIOR WALL- ALUMINUM COMPOSITE METAL PANEL WITH 1" XPS INSULATION + (2) LAYERS OF 5/8" DENSE-GLASS GOLD ON EXTERIOR SIDE AND (1) LAYER OF 5/8" GYP. BD. ON INTERIOR SIDE OF 6" METAL STUDS, 16 GA. @ 16" O.C. W/4" BATT INSULATION TO UNDERSIDE OF CONCRETE SLAB
	CAST IN PLACE CONCRETE WALL
	CONCRETE MASONRY WALL
8	3 HOUR FIRE RATED 8" CMU PARTITION AT TRASH CHUTE
0	2 HOUR FIRE RATED PARTITION: MASONRY EQUIVALENT (1) LAYER OF 5/8" THK IMPACT RESISTANCE GYP. BD. AND (1) LAYER OF 5/8" THK GYP. BD ON BOTH SIDES OF 3 5/8" MTL STUD, 20 GA MIN. @ 16" O.C. W/ 4" BATT INSULATION TO UNDERSIDE OF CONCRETE SLAB
1	2 HOUR FIRE RATED PARTITION: (2) LAYER OF 5/8" THK TYPE 'X" GYP. BD. ON BOTH SIDES OF 3 5/8" MTL STUD @16" O.C. W/ 4" BATT INSULATION TO UNDERSIDE OF CONCRETE SLAB
2	2 HOUR FIRE RATED SHAFT WALL: (1) LAYER OF 5/8" THK TYPE 'X" GYP. BD. ON BOTH SIDES OF 2 1/2" MTL I STUDS W/ 1"X24" TYPE X GYPSUM PANEL INSERTED BETWEEN 2 1/2" FLOOR AND CEILING TRACK
3	2 HOUR FIRE RATED PARTITION: (2) LAYER OF 5/8" THK TYPE 'X" GYP. BD. ON INTERIOR SIDE OF 2 1/2" METAL STUDS @16" O.C. TO UNDERSIDE OF CONCRETE SLAB
4	1 HOUR FIRE RATED PARTITION: (1) LAYER OF 5/8" THK TYPE 'X" GYP. BD. ON BOTH SIDES OF 3 5/8" MTL STUD @16" O.C. W/ 4" BATT INSULATION TO UNDERSIDE OF CONCRETE SLAB
5	INTERIOR FURRING PARTITION: (1) LAYER OF 5/8" THK TYPE 'X" GYP. BD. ON INTERIOR SIDES OF 2 1/2" MTL STUD @16" O.C. W/ 2" BATT INSULATION TO UNDERSIDE OF CONCRETE SLAB
6	INTERIOR FURRING PARTITION: (1) LAYER OF 5/8" THK TYPE 'X" GYP. BD. ON INTERIOR SIDES OF 7/8" MTL FURRING STRIP @16" O.C. TO UNDERSIDE OF CONCRETE SLAB
7	INTERIOR KNEE WALL PARTITION: (1) LAYER OF 5/8" THK TYPE 'X" GYP. BD. ON BOTH SIDES OF 3 5/8" MTL STUDS @16" O.C. TO UNDERSIDE OF COUNTER TOP
15	INTERIOR CHASE WALL PARTITION: (1) LAYER OF 5/8" THK TYPE 'X" GYP. BD. ON 1 5/8" METAL STUDS @16" O.C. TO UNDERSIDE OF CONCRETE SLAB ON BOTH SIDES OF 4" CHASE SPACE

ARCHITECT:
MORALI ARCHITECT
505 8th AVENUE, SUITE 2202, NEW YORK, NY, 10018
TEL. 212 219 2091 E-MAIL: MSTUDIONY@AOL.COM

IMA ENGINEERING , PC
123-23 82 AVENUE, KEW GARDENS, NY, 11415 TEL: 718 268 8600

ADVANCED CLEANUP TECHNOLOGIES, INC.
110 MAIN STREET, SUITE 103, PORT WASHINGTON, NY, 11050

COPYRIGHT (C)
THESE PLAN ARE AN INSTRUMENT OF SERVICE AND ARE THE PROPERTY OF THE ARCHITECT.
This and all documents produced by this firm under this agreement shall remain the sole property of this firm and may not be used, copied, changed or distributed by the client or others without the written consent of this firm.
INFRINGEMENTS WILL BE PROSECUTED.

CONTRACTOR SHALL VERIFY ALL CONDITIONS AND MEASUREMENTS IN THE FIELD AND BE RESPONSIBLE FOR FIELD FIT AND QUANTITY OF WORK. NO ALLOWANCES SHALL BE MADE IN BEHALF OF THE CONTRACTOR FOR ANY ERROR OR NEGLECT ON HIS PART.

"THIS PLAN IS APPROVED ONLY FOR WORK INDICATED ON THE APPLICATION SPECIFICATION SHEET, ALL OTHER MATTERS SHOWN ARE NOT TO BE RELIED UPON, OR TO BE CONSIDERED AS EITHER BEING APPROVED OR IN ACCORDANCE WITH APPLICABLE CODES."

No.	Description	Date

PROJECT
36-37 31ST STREET
LONG ISLAND CITY, NY
11106

ROOF FLOOR PLAN

SCALE : AS NOTED

REGISTERED ARCHITECT ANTHONY J. MORALI 026683-1 STATE OF NEW YORK

Date	10.12.15
Project Number	1507
Drawn By	CI
Checked By	AM

A-108.00

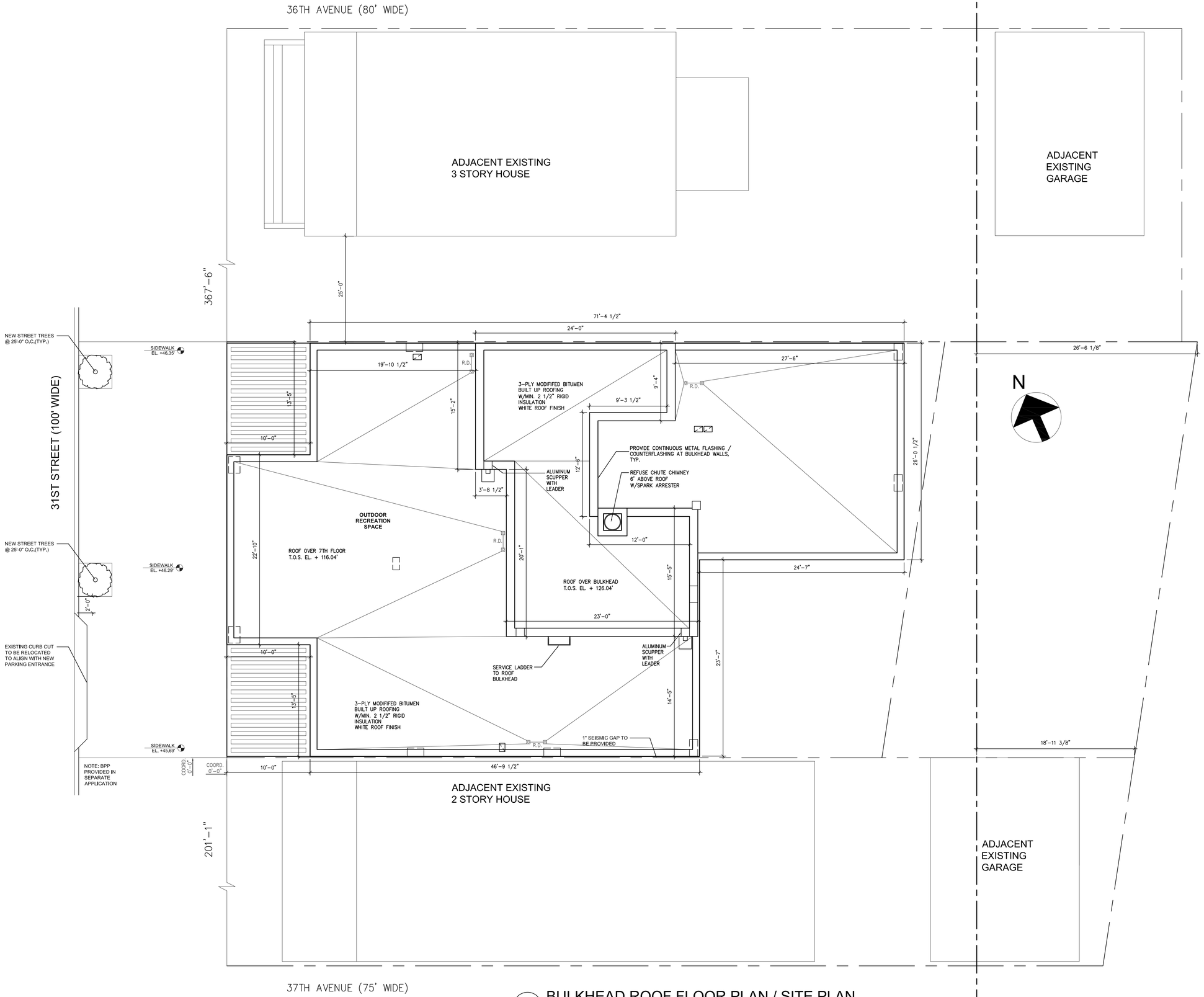

BULKHEAD ROOF FLOOR PLAN / SITE PLAN
SCALE: 3/16" = 1'-0"

ARCHITECT:
MORALI ARCHITECT
505 8th AVENUE, SUITE 2202, NEW YORK, NY, 10018
TEL. 212 219 2091 E-MAIL: MSTUDIONY@AOL.COM

IMA ENGINEERING , PC
123-23 82 AVENUE, KEW GARDENS, NY, 11415 TEL: 718 268 8600

ADVANCED CLEANUP
TECHNOLOGIES, INC.
110 MAIN STREET, SUITE 103, PORT WASHINGTON, NY, 11050

COPYRIGHT (C)
THESE PLAN ARE AN INSTRUMENT OF SERVICE AND ARE THE PROPERTY OF THE ARCHITECT.
This and all documents produced by this firm under this agreement shall remain the sole property of this firm and may not be used, copied, changed or distributed by the client or others without the written consent of this firm.
INFRINGEMENTS WILL BE PROSECUTED.

CONTRACTOR SHALL VERIFY ALL CONDITIONS AND MEASUREMENTS IN THE FIELD AND BE RESPONSIBLE FOR FIELD FIT AND QUANTITY OF WORK. NO ALLOWANCES SHALL BE MADE IN BEHALF OF THE CONTRACTOR FOR ANY ERROR OR NEGLECT ON HIS PART.

"THIS PLAN IS APPROVED ONLY FOR WORK INDICATED ON THE APPLICATION SPECIFICATION SHEET. ALL OTHER MATTERS SHOWN ARE NOT TO BE RELIED UPON, OR TO BE CONSIDERED AS EITHER BEING APPROVED OR IN ACCORDANCE WITH APPLICABLE CODES."

No.	Description	Date

PROJECT
36-37 31ST STREET
LONG ISLAND CITY, NY
11106

ROOF FLOOR PLAN

SCALE : AS NOTED

SEAL
REGISTERED ARCHITECT
ANTHONY J. MORALI
STATE OF NEW YORK
011693-1

Date	10.12.15
Project Number	1507
Drawn By	CI
Checked By	AM

A-109.00

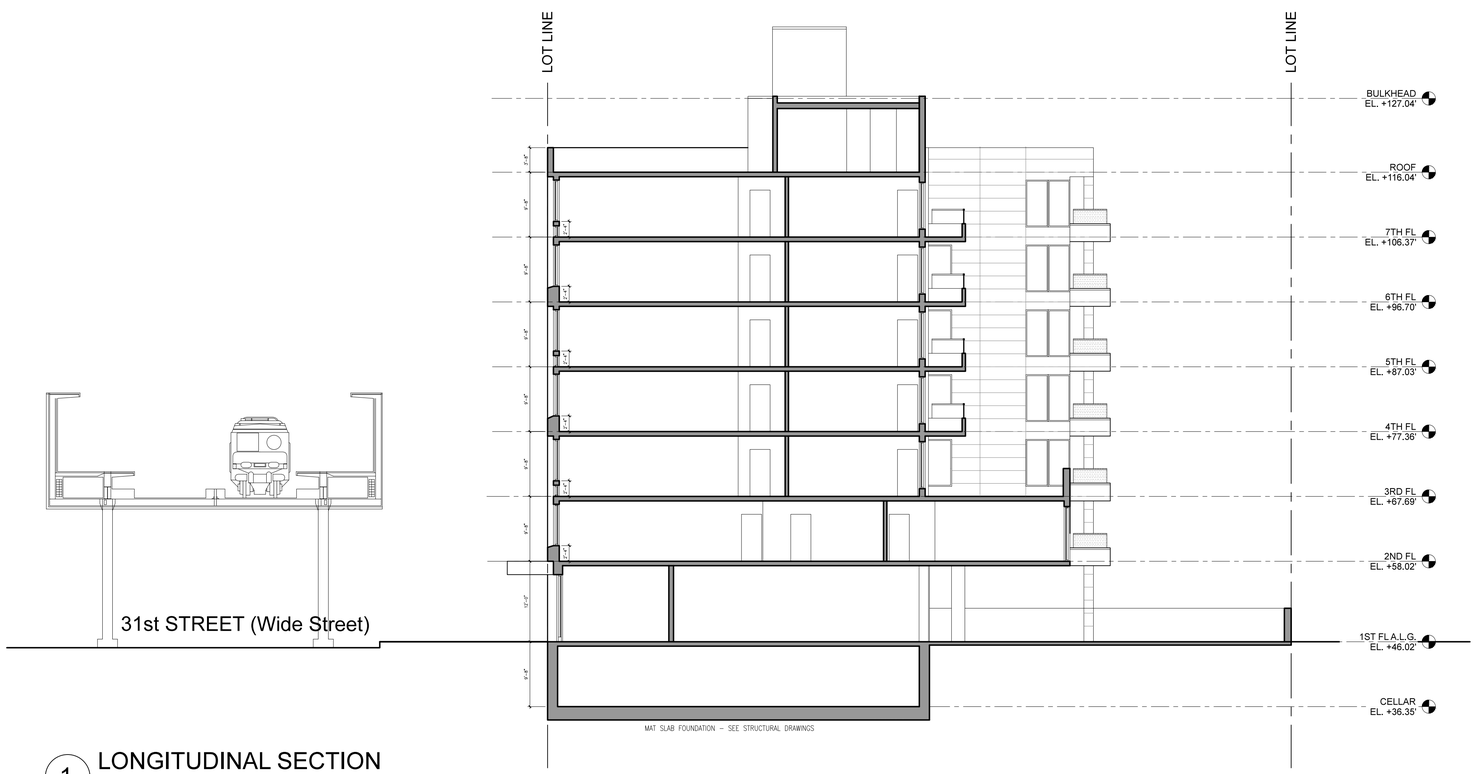

1 LONGITUDINAL SECTION
SCALE: 3/32" = 1'-0"

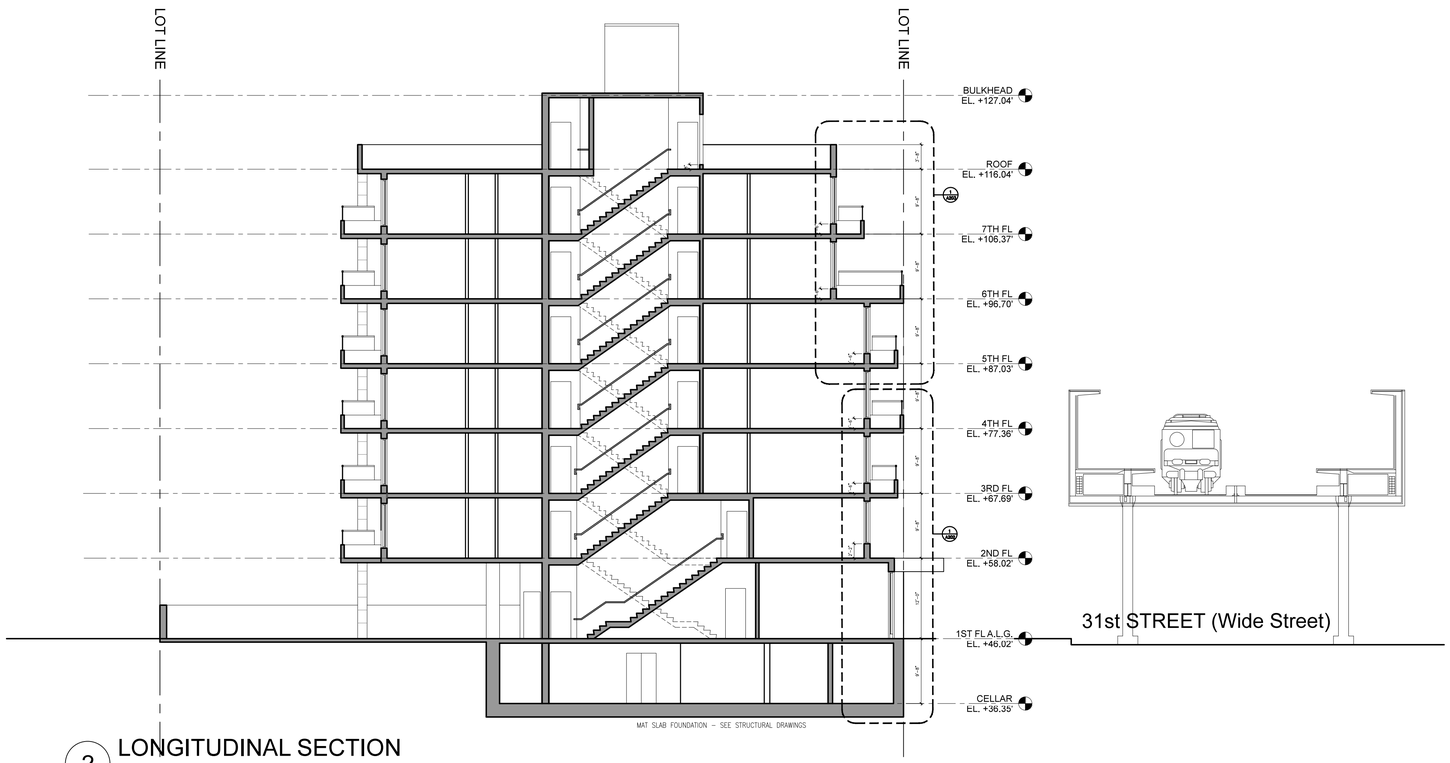

2 LONGITUDINAL SECTION
SCALE: 3/32" = 1'-0"

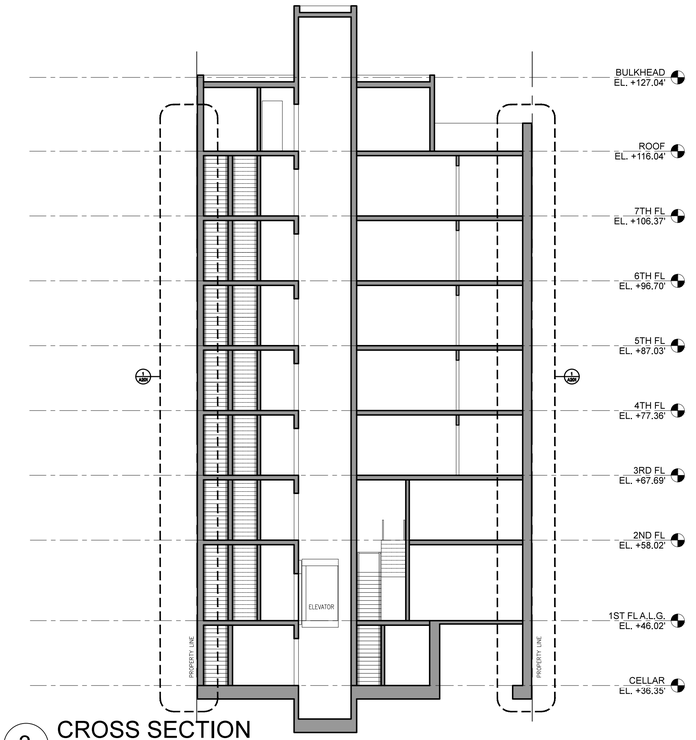

3 CROSS SECTION
SCALE: 3/32" = 1'-0"

ARCHITECT:
MORALI ARCHITECT
505 8th AVENUE, SUITE 2202, NEW YORK, NY, 10018
TEL. 212 219 2091 E-MAIL: MSTUDIONY@AOL.COM

IMA ENGINEERING, PC
123-23 82 AVENUE, KEW GARDENS, NY, 11415 TEL: 718 268 8600

ADVANCED CLEANUP TECHNOLOGIES, INC.
110 MAIN STREET, SUITE 103, PORT WASHINGTON, NY, 11050

COPYRIGHT (C)
THESE PLAN ARE AN INSTRUMENT OF SERVICE AND ARE THE PROPERTY OF THE ARCHITECT.
This and all documents produced by this firm under this agreement shall remain the sole property of this firm and may not be used, copied, changed or distributed by the client or others without the written consent of this firm.
INFRINGEMENTS WILL BE PROSECUTED.

CONTRACTOR SHALL VERIFY ALL CONDITIONS AND MEASUREMENTS IN THE FIELD AND BE RESPONSIBILE FOR FIELD FIT AND QUANTITY OF WORK. NO ALLOWANCES SHALL BE MADE IN BEHALF OF THE CONTRACTOR FOR ANY ERROR OR NEGLECT ON HIS PART.

"THIS PLAN IS APPROVED ONLY FOR WORK INDICATED ON THE APPLICATION SPECIFICATION SHEET. ALL OTHER MATTERS SHOWN ARE NOT TO BE RELIED UPON, OR TO BE CONSIDERED AS EITHER BEING APPROVED OR IN ACCORDANCE WITH APPLICABLE CODES."

No.	Description	Date

PROJECT
36-37 31ST STREET
LONG ISLAND CITY, NY
11106

SECTION DIAGRAMS

SCALE : AS NOTED

Date	10.12.15
Project Number	1507
Drawn By	CI
Checked By	AM

A-200.00

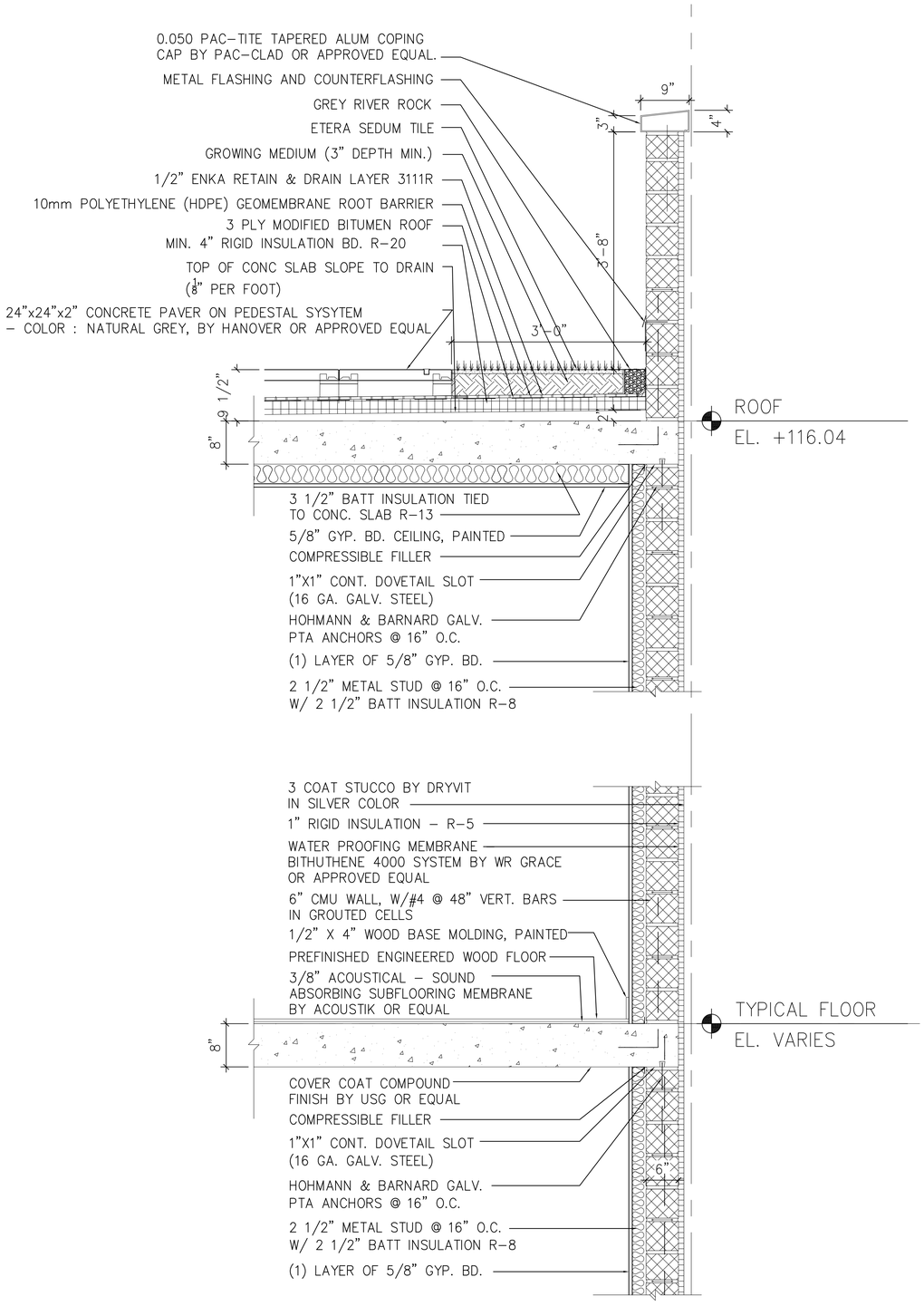

WALL SECTION DETAILS
SCALE: 1" = 1'-0"

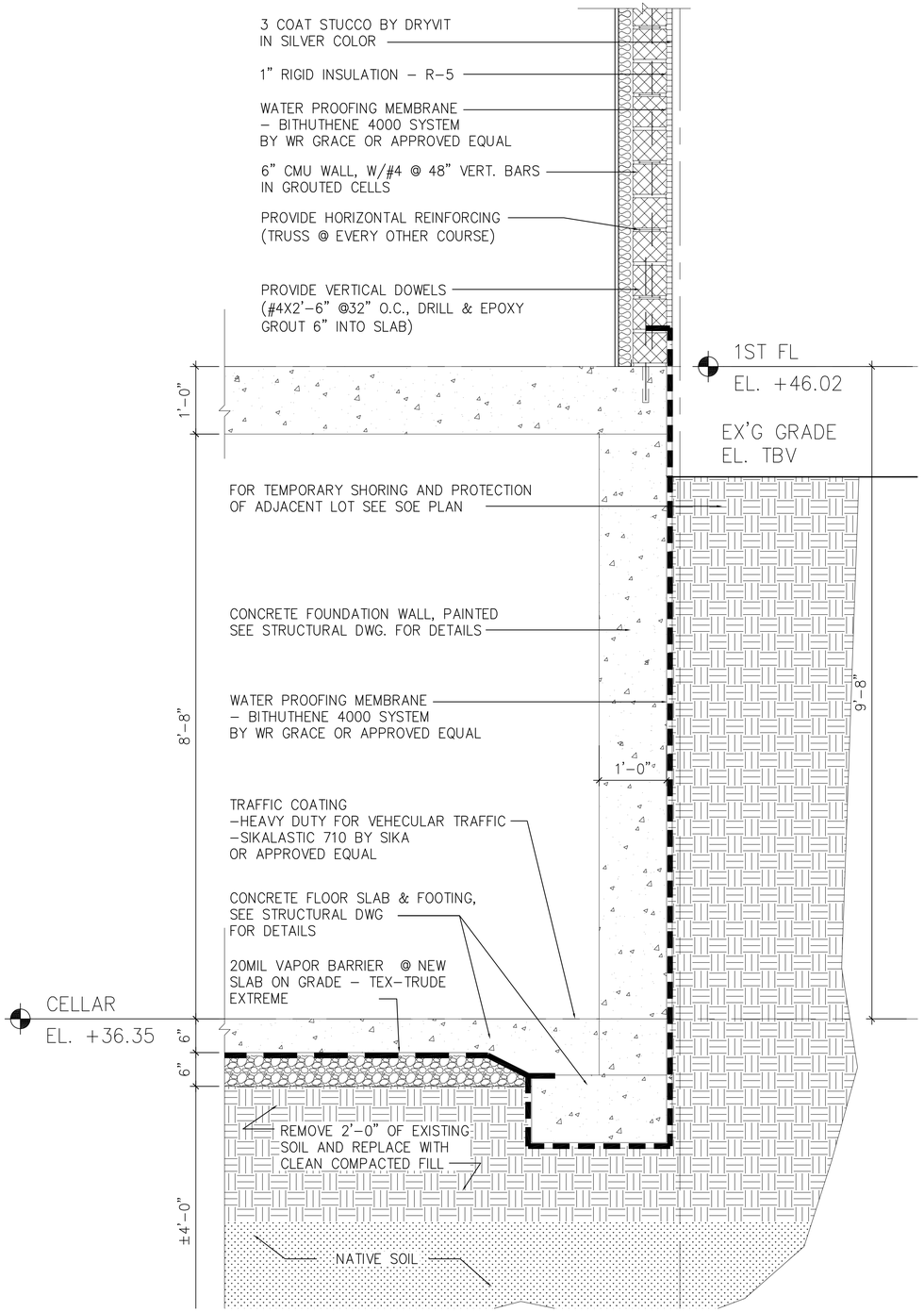

WALL SECTION DETAILS
SCALE: 1" = 1'-0"

ARCHITECT:
MORALI ARCHITECTURE
505 8th AVENUE, SUITE 2202, NEW YORK, NY, 10018
TEL. 212 219 2091 E-MAIL:JMORALI@MORALIARCHITECTURE.COM

IMA ENGINEERING, PC
123-23 82 AVENUE, KEW GARDENS, NY, 11415 TEL: 718 268 8600

ADVANCED CLEANUP TECHNOLOGIES, INC.
110 MAIN STREET, SUITE 103, PORT WASHINGTON, NY, 11050

COPYRIGHT (C)
THESE PLAN ARE AN INSTRUMENT OF SERVICE AND ARE THE PROPERTY OF THE ARCHITECT.
This and all documents produced by this firm under this agreement shall remain the sole property of this firm and may not be used, copied, changed or distributed by the client or others without the written consent of this firm.
INFRINGEMENTS WILL BE PROSECUTED.

CONTRACTOR SHALL VERIFY ALL CONDITIONS AND MEASUREMENTS IN THE FIELD AND BE RESPONSIBLE FOR FIELD FIT AND QUANTITY OF WORK. NO ALLOWANCES SHALL BE MADE IN BEHALF OF THE CONTRACTOR FOR ANY ERROR OR NEGLECT ON HIS PART.

"THIS PLAN IS APPROVED ONLY FOR WORK INDICATED ON THE APPLICATION SPECIFICATION SHEET, ALL OTHER MATTERS SHOWN ARE NOT TO BE RELIED UPON, OR TO BE CONSIDERED AS EITHER BEING APPROVED OR IN ACCORDANCE WITH APPLICABLE CODES."

No.	Description	Date

PROJECT
36-37 31ST STREET
LONG ISLAND CITY, NY
11106

WALL SECTION DETAILS

SCALE : AS NOTED

REGISTERED ARCHITECT ANTHONY J. MORALI STATE OF NEW YORK 026683-1

Date	10.12.15
Project Number	1507
Drawn By	CI
Checked By	AM

A-201.00

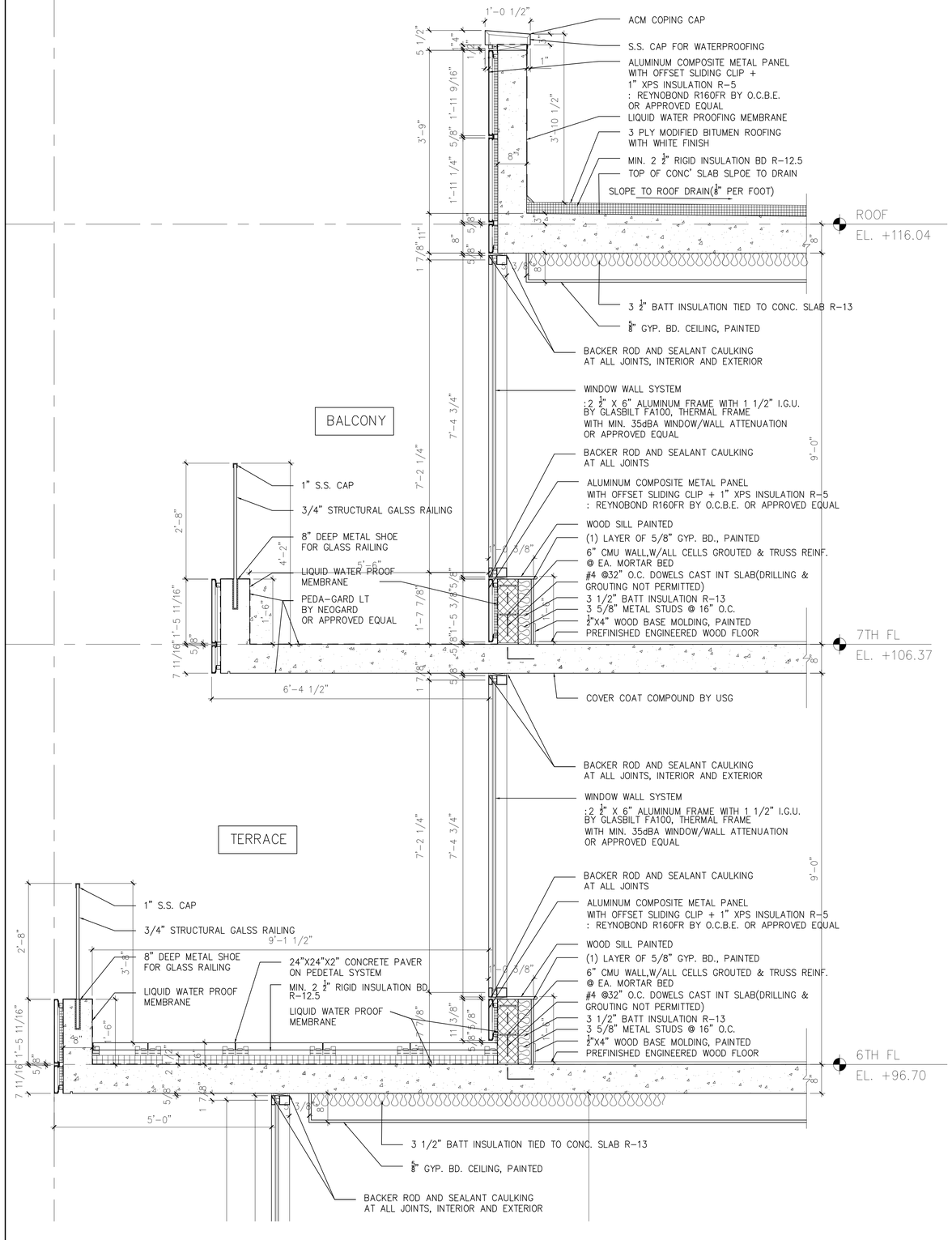

WALL SECTION DETAILS
SCALE: 3/4" = 1'-0"

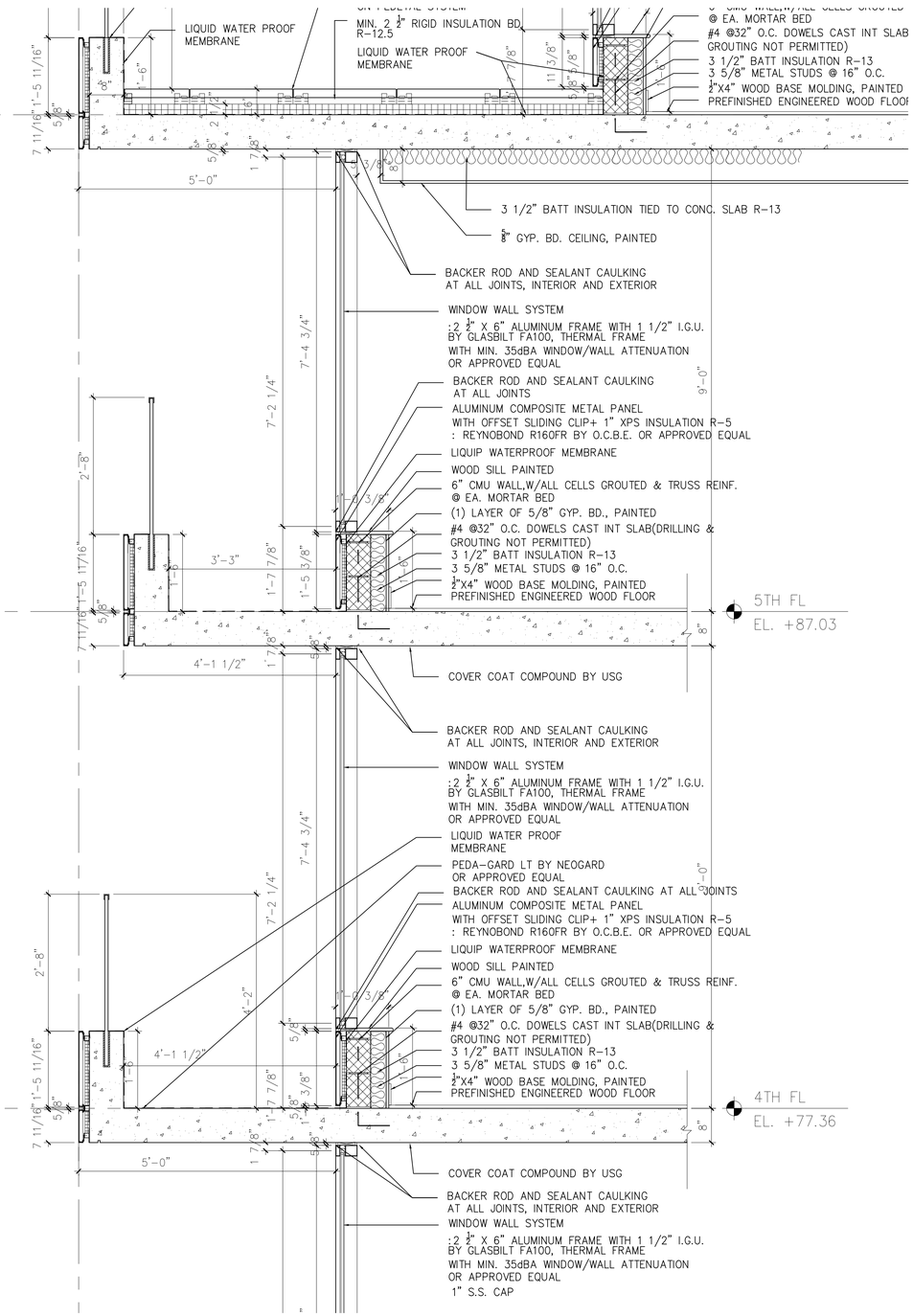

WALL SECTION DETAILS
SCALE: 3/4" = 1'-0"

ARCHITECT:
MORALI ARCHITECTURE
505 8th AVENUE, SUITE 2202, NEW YORK, NY, 10018
TEL. 212 219 2091 E-MAIL:JMORALI@MORALIARCHITECTURE.COM

IMA ENGINEERING, PC
123-23 82 AVENUE, KEW GARDENS, NY, 11415 TEL: 718 268 8600

ADVANCED CLEANUP TECHNOLOGIES, INC.
110 MAIN STREET, SUITE 103, PORT WASHINGTON, NY, 11050

COPYRIGHT (C)
THESE PLAN ARE AN INSTRUMENT OF SERVICE AND ARE THE PROPERTY OF THE ARCHITECT.
This and all documents produced by this firm under this agreement shall remain the sole property of this firm and may not be used, copied, changed or distributed by the client or others without the written consent of this firm.
INFRINGEMENTS WILL BE PROSECUTED.

CONTRACTOR SHALL VERIFY ALL CONDITIONS AND MEASUREMENTS IN THE FIELD AND BE RESPONSIBLE FOR FIELD FIT AND QUANTITY OF WORK. NO ALLOWANCES SHALL BE MADE IN BEHALF OF THE CONTRACTOR FOR ANY ERROR OR NEGLECT ON HIS PART.

"THIS PLAN IS APPROVED ONLY FOR WORK INDICATED ON THE APPLICATION SPECIFICATION SHEET. ALL OTHER MATTERS SHOWN ARE NOT TO BE RELIED UPON, OR TO BE CONSIDERED AS EITHER BEING APPROVED OR IN ACCORDANCE WITH APPLICABLE CODES."

No.	Description	Date

PROJECT
36-37 31ST STREET
LONG ISLAND CITY, NY
11106

WALL SECTION DETAILS

SCALE : AS NOTED

SEAL
REGISTERED ARCHITECT ANTHONY J. MORALI 031883-1 STATE OF NEW YORK

Date	10.12.15
Project Number	1507
Drawn By	CI
Checked By	AM

A-202.00

BACK (SOUTHEAST) ELEVATION
SCALE: 3/16" = 1'-0"

FRONT (NORTHWEST) ELEVATION
SCALE: 3/16" = 1'-0"

ARCHITECT:
MORALI ARCHITECTURE
505 8th AVENUE, SUITE 2202, NEW YORK, NY, 10018
TEL. 212 219 2091 E-MAIL: jmorali@moraliarchitecture.com

IMA ENGINEERING, PC
123-23 82 AVENUE, KEW GARDENS, NY, 11415 TEL: 718 268 8600

ADVANCED CLEANUP TECHNOLOGIES, INC.
110 MAIN STREET, SUITE 103, PORT WASHINGTON, NY, 11050

COPYRIGHT (C)
THESE PLAN ARE AN INSTRUMENT OF SERVICE AND ARE THE PROPERTY OF THE ARCHITECT.
This and all documents produced by this firm under this agreement shall remain the sole property of this firm and may not be used, copied, changed or distributed by the client or others without the written consent of this firm.
INFRINGEMENTS WILL BE PROSECUTED.

CONTRACTOR SHALL VERIFY ALL CONDITIONS AND MEASUREMENTS IN THE FIELD AND BE RESPONSIBLE FOR FIELD FIT AND QUANTITY OF WORK. NO ALLOWANCES SHALL BE MADE IN BEHALF OF THE CONTRACTOR FOR ANY ERROR OR NEGLECT ON HIS PART.

"THIS PLAN IS APPROVED ONLY FOR WORK INDICATED ON THE APPLICATION SPECIFICATION SHEET. ALL OTHER MATTERS SHOWN ARE NOT TO BE RELIED UPON, OR TO BE CONSIDERED AS EITHER BEING APPROVED OR IN ACCORDANCE WITH APPLICABLE CODES."

No.	Description	Date

PROJECT
36-37 31ST STREET
LONG ISLAND CITY, NY
11106

FRONT & BACK ELEVATIONS (NORTHWEST & SOUTHEAST)

SCALE : AS NOTED

REGISTERED ARCHITECT ANTHONY J. MORALI STATE OF NEW YORK 017693-1

Date	10.12.15
Project Number	1507
Drawn By	CI
Checked By	AM

A-300.00

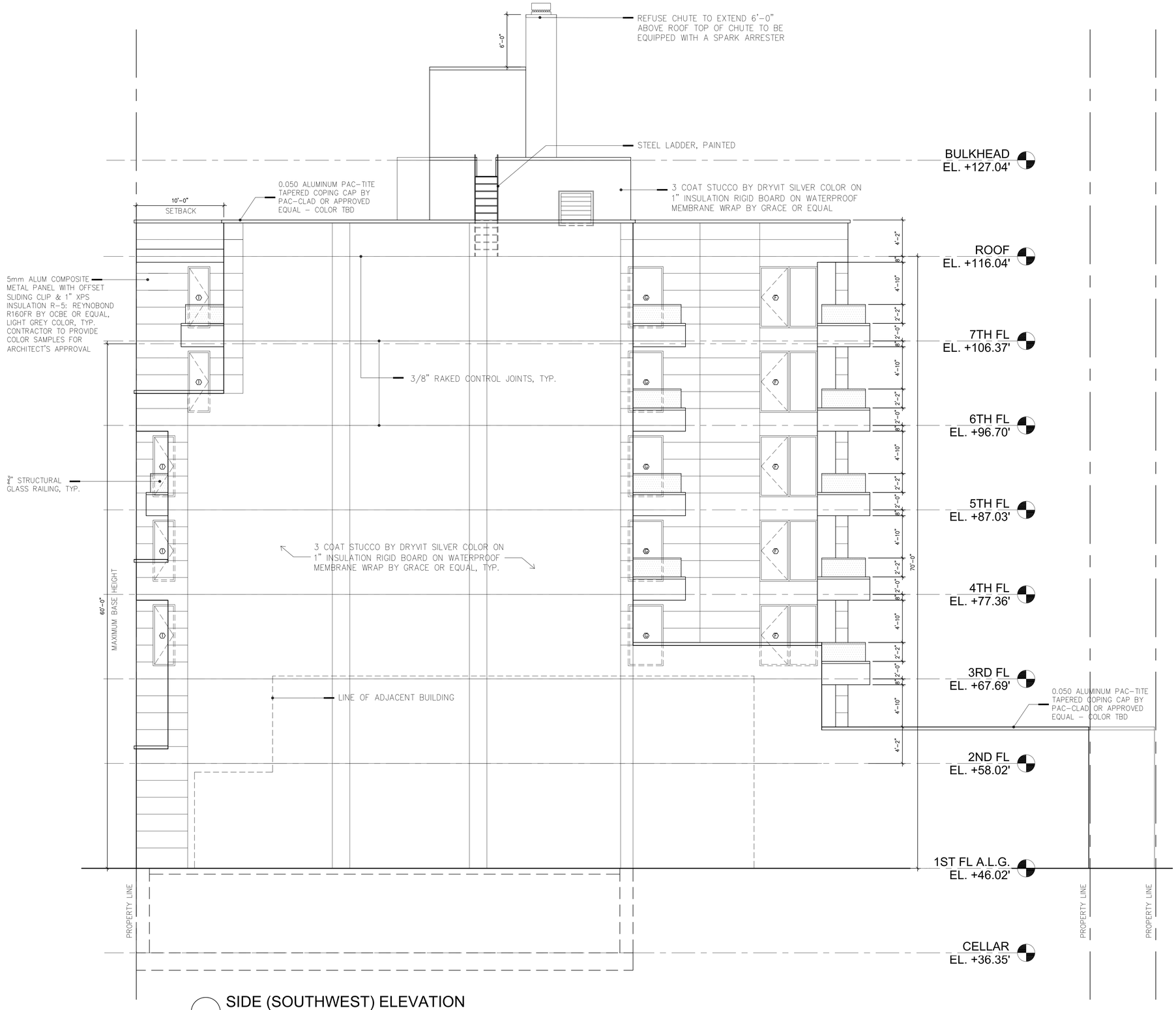

SIDE (SOUTHWEST) ELEVATION
SCALE: 3/16" = 1'-0"

ARCHITECT:
MORALI ARCHITECTURE
505 8th AVENUE, SUITE 2202, NEW YORK, NY, 10018
TEL. 212 219 2091 E-MAIL: jmorali@moraliarchitecture.com

IMA ENGINEERING, PC
123-23 82 AVENUE, KEW GARDENS, NY, 11415 TEL: 718 268 8600

ADVANCED CLEANUP TECHNOLOGIES, INC.
110 MAIN STREET, SUITE 103, PORT WASHINGTON, NY, 11050

COPYRIGHT (C)
THESE PLAN ARE AN INSTRUMENT OF SERVICE AND ARE THE PROPERTY OF THE ARCHITECT.
This and all documents produced by this firm under this agreement shall remain the sole property of this firm and may not be used, copied, changed or distributed by the client or others without the written consent of this firm.
INFRINGEMENTS WILL BE PROSECUTED.

CONTRACTOR SHALL VERIFY ALL CONDITIONS AND MEASUREMENTS IN THE FIELD AND BE RESPONSIBLE FOR FIELD FIT AND QUANTITY OF WORK. NO ALLOWANCES SHALL BE MADE IN BEHALF OF THE CONTRACTOR FOR ANY ERROR OR NEGLECT ON HIS PART.

"THIS PLAN IS APPROVED ONLY FOR WORK INDICATED ON THE APPLICATION SPECIFICATION SHEET. ALL OTHER MATTERS SHOWN ARE NOT TO BE RELIED UPON, OR TO BE CONSIDERED AS EITHER BEING APPROVED OR IN ACCORDANCE WITH APPLICABLE CODES."

No.	Description	Date

PROJECT
36-37 31ST STREET
LONG ISLAND CITY, NY
11106

SIDE ELEVATION
(SOUTHWEST)

SCALE : AS NOTED

SEAL
REGISTERED ARCHITECT
ANTHONY J. MORALI
STATE OF NEW YORK

Date	10.12.15
Project Number	1507
Drawn By	CI
Checked By	AM

A-301.00

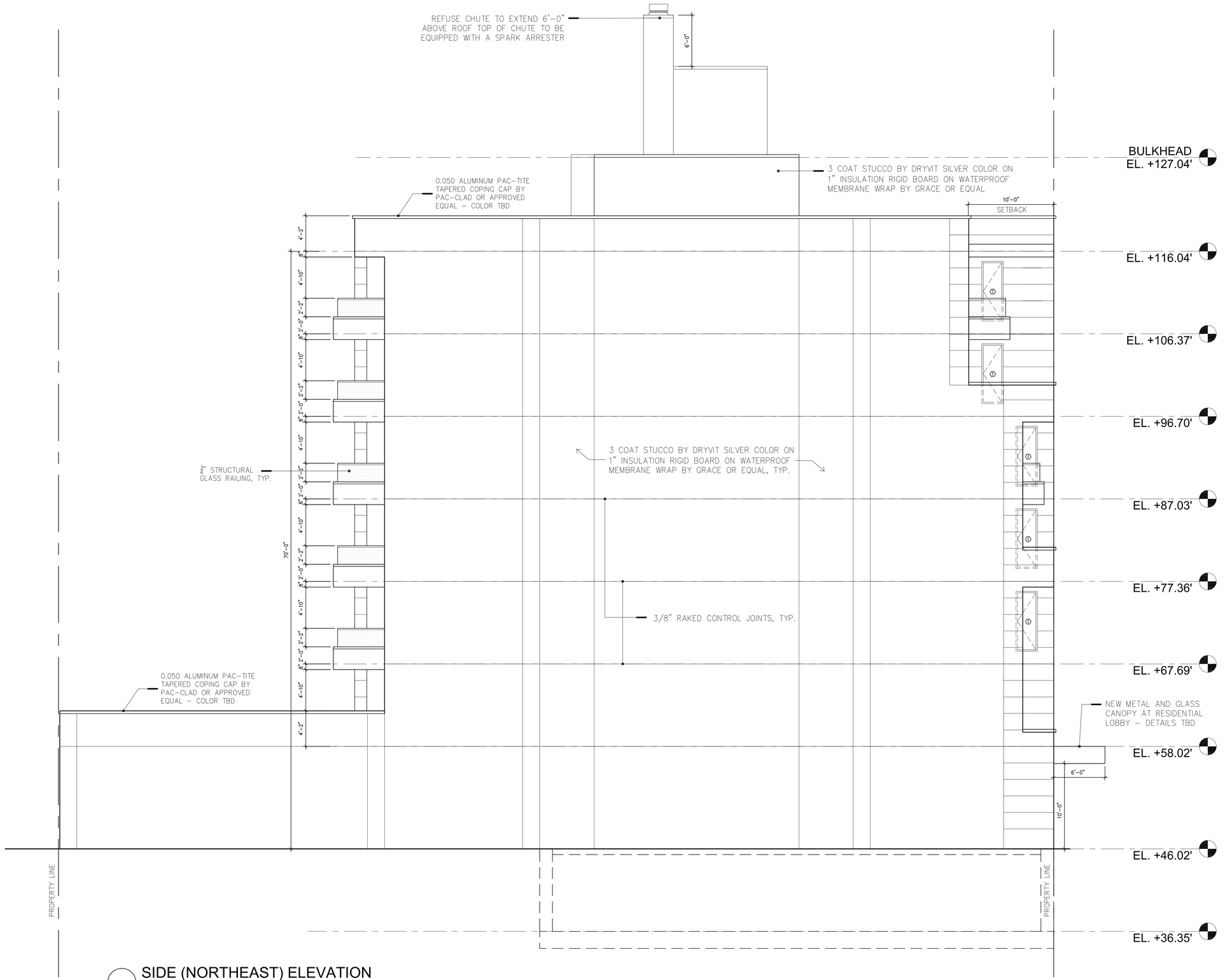

SIDE (NORTHEAST) ELEVATION
SCALE: 3/16" = 1'-0"

ARCHITECT:
MORALI ARCHITECTURE
505 8th AVENUE, SUITE 2202, NEW YORK, NY, 10018
TEL. 212 219 2091 E-MAIL: jmorali@moraliarchitecture.com

IMA ENGINEERING, PC
123-23 82 AVENUE, KEW GARDENS, NY, 11415 TEL: 718 268 8600

ADVANCED CLEANUP TECHNOLOGIES, INC.
110 MAIN STREET, SUITE 103, PORT WASHINGTON, NY, 11050

COPYRIGHT (C)
THESE PLAN ARE AN INSTRUMENT OF SERVICE AND ARE THE PROPERTY OF THE ARCHITECT,
This and all documents produced by this firm under this agreement shall remain the sole property of this firm and may not be used, copied, changed or distributed by the client or others without the written consent of this firm,
INFRINGEMENTS WILL BE PROSECUTED.

CONTRACTOR SHALL VERIFY ALL CONDITIONS AND MEASUREMENTS IN THE FIELD AND BE RESPONSIBLE FOR FIELD FIT AND QUANTITY OF WORK. NO ALLOWANCES SHALL BE MADE IN BEHALF OF THE CONTRACTOR FOR ANY ERROR OR NEGLECT ON HIS PART.

"THIS PLAN IS APPROVED ONLY FOR WORK INDICATED ON THE APPLICATION SPECIFICATION SHEET, ALL OTHER MATTERS SHOWN ARE NOT TO BE RELIED UPON, OR TO BE CONSIDERED AS EITHER BEING APPROVED OR IN ACCORDANCE WITH APPLICABLE CODES."

No.	Description	Date

PROJECT
36-37 31ST STREET
LONG ISLAND CITY, NY
11106

SIDE ELEVATION
(NORTHEAST)

SCALE : AS NOTED

REGISTERED ARCHITECT
ANTHONY J. MORALI
STATE OF NEW YORK

Date	10.12.15
Project Number	1507
Drawn By	CI
Checked By	AM

A-302.00

CELLAR FLOOR RCP
SCALE: $\frac{3}{16}$" = 1'-0"

R.C.P. LEGEND

SYMBOL	DESCRIPTION
	CEILING LIGHT-RECESSED
EM	CEILING LIGHT-RECESSED, W/ EMERGENCY BATTERY BACK UP
SH	SHOWER LIGHT-RECESSED, WATER PROOF
P	CEILING LIGHT-PENDANT
	WALL SCONCE
EX	WALL SCONCE (EXTERIOR)
	WALL SCONCE (CORRIDOR)
	UNDERCABINET LED STRIP WORK LIGHT
	FLUORESCENT CEILING LIGHT, SURFACE MOUNTED
EM	FLUORESCENT CEILING LIGHT, SURFACE MOUNTED W/ EMERGENCY BATTERY BACK UP
M	MOTION DETECTOR SENSOR
SM CO	SMOKE/CARBON MONOXIDE DETECTOR, HARD WIRED, WALL MOUNT
IC	INTERCOM, 52" AFF
T	THERMOSTAT
	PHONE / DATA OUTLET
	DUPLEX RECEPTACLE
	FLOOR RECEPTACLE
EX	DUPLEX RECEPTACLE, EXTERIOR
	QUAD RECEPTACLE
	EXIT SIGN W/ EMERGENCY LIGHTS, CEILING MOUNT
	FIRE ALARM SPEAKER
	12" DROP SOFFIT AT KITCHENETTES
	ELECTRIC PANEL
	SPRINKLER HEADS

LIGHT FIXTURE SCHEDULE

TYPE	SYMBOL	DESCRIPTION	PHOTOMETRY	SYSTEM WATTS	VOLTAGE	CONTROL INTENT	MANUFACTURER
L1		Description: Recessed LED fixture Lightolier Lytecaster Uniframe 6-3/4" with black baffle Lamp: (1) 433672 - 8A19/SLIM/2700 DIM 6/1 8-40W[450 LMS][2700K](PHILIPS) Optics/Features: Housing: (0.05") thick powder coated aluminum provides integrated thermal management allowing for a low profile at less than 3-1/2" tall. LED board: High efficiency mid-flux LED's. Mixing chamber: 98% reflective, highly diffuse film. Diffusion lens: (0.06") thick opal lens provides an even source of illumination. Retaining ring: (0.04") thick powder coated aluminum,secures module components. Reflector: 30% glass reinforced injection molded poly carbonate is durable and provides a 70° cutoff to the source. Retaining clips: 29 gauge Stainless Steel, allowstool-less installation of light engine to trim. Location/Remarks: Fixtures to be located in dwelling units at dropped ceiling areas		8 WATTS	120 V	Recessed fixtures shall be controlled by: LEVITON DECORA DSM10-1LZ Universal Decora Dimmable LED, Rocker-Slide Dimmer, 450W-120VAC Dimmable LED Single Pole or 3-Way White	LUMINAIRE: LIGHTOLIER - LYTECASTER - 1176LED09N27D1
L2	EM	Description: Recessed LED fixture Lightolier Lytecaster Uniframe 6-3/4" with black baffle Lamp: (1) 433672 - 8A19/SLIM/2700 DIM 6/1 8-40W[450 LMS][2700K](PHILIPS) Optics/Features: Housing: (0.05") thick powder coated aluminum provides integrated thermal management allowing for a low profile at less than 3-1/2" tall. LED board: High efficiency mid-flux LED's. Mixing chamber: 98% reflective, highly diffuse film. Diffusion lens: (0.06") thick opal lens provides an even source of illumination. Retaining ring: (0.04") thick powder coated aluminum,secures module components. Reflector: 30% glass reinforced injection molded poly carbonate is durable and provides a 70° cutoff to the source. Retaining clips: 29 gauge Stainless Steel, allowstool-less installation of light engine to trim. Location/Remarks: Fixtures to be located in public corridors and Elevator Lobbies		8 WATTS	120 V	Fixtures to remain energized at all times	LUMINAIRE: LIGHTOLIER - LYTECASTER - 1176LED09N27D1
L3	SH	Description: Recessed LED fixture Lightolier Lytecaster Uniframe 6-3/4" with opal disk for wet location Lamp: (1) 433672 - 8A19/SLIM/2700 DIM 6/1 8-40W[450 LMS][2700K](PHILIPS) Optics/Features: Housing: (0.05") thick powder coated aluminum provides integrated thermal management allowing for a low profile at less than 3-1/2" tall. LED board: High efficiency mid-flux LED's. Mixing chamber: 98% reflective, highly diffuse film. Diffusion lens: (0.06") thick opal lens provides an even source of illumination. Retaining ring: (0.04") thick powder coated aluminum,secures module components. Reflector: 30% glass reinforced injection molded poly carbonate is durable and provides a 70° cutoff to the source. Retaining clips: 29 gauge Stainless Steel, allowstool-less installation of light engine to trim. Location/Remarks: Fixtures to be located in public corridors and Elevator Lobbies		8 WATTS	120 V	Recessed fixtures shall be controlled by: LEVITON DECORA DSM10-1LZ Universal Decora Dimmable LED, Rocker-Slide Dimmer, 450W-120VAC Dimmable LED Single Pole or 3-Way White	LUMINAIRE: LIGHTOLIER - LYTECASTER - 1121LED09N27D1
L4	P	Description: PS Series Decorative, Vetro LED Pendant (straight) 2.375" Satin AL Lamp: (1) PS01LW40SAU - 7.5W[356 LMS][3000K](PHILIPS) Optics/Features: Power Head: Die cast and extruded aluminum components. Brushed and clear lacquer finish. Primary Diffuser: (SG01L) Triplex hand blown glass or (SA01L) opal acrylic. Outer Glass/Acrylic Assembly: (GLS01) A straight section of clear extruded glass with polished edges, (GLS02) a conical section of clear hand blown glass with polished edges, or (GLS01A) a straight section of clear acrylic. All outer assemblies come with a die cast aluminum holder ring with stainless steel support pins. Optical Mixing Chamber: Remote phosphor technology provides increased efficiency and color stability. Phosphor lens assembly positioned in front of LED array converts blue light to white and produces a wide even pattern of diffused light without bright spots created by individual LEDs. Uniform phosphor coating provides consistent, stable color with a shift of no more than +/-100K over life. Mixing chamber redirects scattered light back out through the emitting aperture. Thermal Management: Heat sink design maintains junction temperature for consistent, reliable performance and 50,000 hour lifetime at 70% lumen maintenance. Location/Remarks: Fixtures to be located in dwelling units at kitchen areas		7.5 WATTS	120 V	Fixtures shall be controlled by: LEVITON DECORA DSM10-1LZ Universal Decora Dimmable LED, Rocker-Slide Dimmer, 450W-120VAC Dimmable LED Single Pole or 3-Way White	LUMINAIRE: PHILIPS PS01LW40SAU Vetro LED PH 2.375" Satin AL
L5	PL	Description: Pendant light Lamp: (1)SM16-07-10D-830-03 - 8W [475 LMS][3000K][SORAA] Optics/Features: LBL Cypree Pendant Slender modern organic-shaped frosted glass. 8 watt replaceable 500 lumen 80 CRI 3000K LED SORAAÂ® module and 6' of field-cuttable suspension cable Location/Remarks: Fixtures to be located in Entry Lobby		8 WATTS	120 V	Fixtures to remain energized at all times	LUMINAIRE: LBL HS463FRSC-LEDS830MPT
L6	S	Description: Surface mounted light Lamp: (1) 6.5A19/2200-2700 DM 6/1 - 6.5W [450 LMS][2700K][PHILIPS] Optics/Features: 12.5W A19, 8W A19 and 17W A21 versions available, Smooth dimming to 10% of full light levels, Remote phosphor (yellow) disappears when energized to create even, soft white light, 25,000-hour rated average life+ Instant-on light Location/Remarks: Fixtures to be located in Dwelling unit closets		6.5 WATTS	120 V	Fixtures shall be controlled by: LEVITON DECORA DSM10-1LZ Universal Decora Dimmable LED, Rocker-Slide Dimmer, 450W-120VAC Dimmable LED Single Pole or 3-Way White	LUMINAIRE: KITCHLER 8881WH
L7		Description: Surface wall Sconce Lamp: (1)10 watt 800 lumen 80 CRI 3000K LED module - EAHP1215WBR [EVERLIGHT] Optics/Features: Hidden within a sleek metal body, an ultra-thin LED light guide panel produces plenty of task illumination ideal for the bath. A thin, forward facing light reveal adds a touch of elegance as the curved endcaps round out the linear nature of the Vertura 24 bathroom lighting fixture from LBL LIghting. Mounts vertically or horizontally. LM-80 Certified; High Power COB & High CRI LED; Multi-Chip Solution; Dimension:12 mm x 15 mm x 1.6 mm; Main Parameters: Luminous Flux, Forward Voltage , Chromaticity and Color Rendering Index; RoHS compliant; Energy Star / ANSI Compliant Binning Structure; Typical Viewing Angle: 115° Location/Remarks: Fixtures to be located in Dwelling unit Bathrooms		10 WATTS	120 V	Fixtures shall be controlled by: LEVITON DECORA DSM10-1LZ Universal Decora Dimmable LED, Rocker-Slide Dimmer, 450W-120VAC Dimmable LED Single Pole or 3-Way White	LUMINAIRE: LBL VERTURA 24 BA867SCLED830 SATIN NICKEL
L8		Description: Surface wall Sconce Lamp: (1)28 watt 2000 lumen 80 CRI 3000K LED module - EAHP1215WBR [EVERLIGHT] Optics/Features: Modern technology meets architectural form in this sophisticated and versatile ceiling light fixture. Riffing on the concept of an elongated 'V', the sleek aluminum body of the Vantra ceiling light from LBL Lighting also serves as the heat sink for the twin LED light guide panels. These visually floating light panels create a unique sense of wonder and offer a choice of outputs including 100% forward or direct/indirect light distribution Ceiling or wall mount. When mounted on the wall, mounts vertically or horizontally. LM-80 Certified; High Power COB & High CRI LED; Multi-Chip Solution; Dimension:12 mm x 15 mm x 1.6 mm; Main Parameters: Luminous Flux, Forward Voltage , Chromaticity and Color Rendering Index; RoHS compliant; Energy Star / ANSI Compliant Binning Structure; Typical Viewing Angle: 115° Location/Remarks: Fixtures to be located in Building corridors		28 WATTS	120 V	Fixtures to remain energized at all times	LUMINAIRE: LBL VANTRA FLUSH MOUNT FM853SCRF-LED830 SATIN NICKEL
L9	EX	Description: Exterior wall Sconce Lamp: (1)9.6 watt 840 lumen 80 CRI 2700K LED module - EAHP1215WBR [EVERLIGHT] Optics/Features: Folded metal frame inspired by modern architecture. Mounts down only. LM-80 Certified; High Power COB & High CRI LED; Multi-Chip Solution; Dimension:12 mm x 15 mm x 1.6 mm; Main Parameters: Luminous Flux, Forward Voltage , Chromaticity and Color Rendering Index; RoHS compliant; Energy Star / ANSI Compliant Binning Structure; Typical Viewing Angle: 115° Location/Remarks: Fixtures to be located at dwelling unit exterior balconies		9.6 WATTS	120 V	Fixtures shall be controlled by: LEVITON DECORA DSM10-1LZ Universal Decora Dimmable LED, Rocker-Slide Dimmer, 450W-120VAC Dimmable LED Single Pole or 3-Way White	LUMINAIRE: LBL TARA 18 OD743BZLEDW
L10		Description: Undercounter strip light Lamp: (1)10 watt 479 lumen 80 CRI 4000K LED module - 910503702218 [PHILIPS] Optics/Features: Housing Extruded aluminium, polycarbonate. White, Black, or Gray powder-coated finish. ; Lens: Polycarbonate; Fixture Connections Integral male / female connectors Temperature Ranges -4° – 122° F (-20° – 50° C) Operating -4° – 122° F (-20° – 50° C) Startup -40° – 176° F (-40° – 80° C) Storage Humidity 0 – 95%, non-condensing; Fixture Run Length Up to 50 ft (15.3 m) of fixtures in a single run, ≤ 324 W; Certification and SafetyCertification UL / cUL, F CC Class B, CE, C-Tick, ENERGY STAR (120 VAC); Environment Dry / Damp Location, IP50 Location/Remarks: Fixtures to be located under kitchen cabinetry		10 WATTS	120 V	Fixtures shall be controlled by: LEVITON DECORA DSM10-1LZ Universal Decora Dimmable LED, Rocker-Slide Dimmer, 450W-120VAC Dimmable LED Single Pole or 3-Way White	LUMINAIRE: PHILIPS eW PROFILE POWERCORE 4000K, 19.25 IN. 523-00002646
L11 L13		Description: Common corridor pendant Lamp: (1)20 watt 1420 lumen 80 CRI 2700K LED module - 80-905 [KOLOURONE-SATCO] Optics/Features: 1-Light Flush Mounted Dome LED Ceiling Light in Polished Nickel Finish and Frosted GlassMotivation WITH 19.5W 120V 2700K 110 Degree Beam 30,000 Hour Circular LED Dimmable Light Engine - Self-contained simple plug and play design - Integrated power supply - No external driver, heat sink or drivers - Easily replaceable - Sleek, space-saving design - RU damp located listed Location/Remarks: Fixtures to be located in Building corridors		20 WATTS	120 V	Fixtures to remain energized at all times	LUMINAIRE: NUVO 62-302
L12	WP	Description: Common corridor pendant Lamp: (1)14 watt 710 lumen 80 CRI 4000K LED module - TLW10LED4KPCB-1 [PHILIPS] Optics/Features: 13.9 watt high-powered LED array; 50,000 hour life; Lightweight, compact design Sturdy die-cast aluminum housing; Architectural bronze UV resistant powder coat finish; UV stabilized polycarbonate lens/refractor UV stabilized polycarbonate front housing; Continuous silicone rubber gasket between housing and lens/cover; Energy-efficient, high-powered LED Array Provides 707 delivered lumens, LM79; Excellent heat management for long life Efficacy: 50.9 lumens per watt (LPW); CRI: 86; 4386 CCT Operating temperature: -25°C (-13°F) to 35°C (95°F) Voltage: 120V 50/60Hz; Factory-installed photocontrol; UL Listed for wet locations 5-year warranty Location/Remarks: Fixtures to be located in Building corridors		14 WATTS	120 V	Fixtures to be controlled by photocell	LUMINAIRE: PHILIPS TWILIGHTER LED WALL PAK TWL10LED4KPCB1
L14	EM	Description: Back of House surface mounted fixture Lamp: (1)28 watt 2763 lumen 80 CRI 3500K LED module - 29WLED [PHILIPS] Optics/Features: A highly efficient, visually comfortable, architecturally styled recessed LED luminaire designed with a minimalistic strategy to achieve sustainable objectives. Low profile configuration is only 3" high with sloped sides for a sleek appearance. Clean, modern design provides architectural styling compatible with virtually any area. Soft opal diffuser with large luminous area minimizes apparent brightness and provides high visual comfort perfect for a wide variety of general lighting applications like offices, schools, retail, or healthcare. Four lumen packages over a wide range provide significant application flexibility over light levels and/or luminaire spacing. A high lumen package can be used in conjunction with wide luminaire spacing to reduce luminaire quantities and overall cost while maintaining good uniformity. Directs a controlled amount of light to the higher angles in the room to balance the brightness of the surfaces and eliminate "cave effect" while creating the impression of a larger, brighter space without glare. Excellent color rendering with a CRI of 80. LEDs are an excellent source for use with controls since dimming or frequent switching does not degrade the performance or life of the source. External sensors are available for use. Surface mount design requires no plenum space. Some DuaLED luminaires are DesignLights Consortium® qualified. Please see the DLC QPL list for exact catalog numbers. (www.designlights.org/QPL) 27L and 347V are not DLC qualified. Location/Remarks: Fixtures to be located in mechanical rooms, stairs		28 WATTS	120 V	Fixtures to be controlled by motion sensor	LUMINAIRE: PHILIPS DUAL LED SURFACE DAY-BRITE ISDL27L835-4-D-UNV-DIM 1X4 FT
L15		Description: Back of House surface mounted fixture Lamp: (1)28 watt 2763 lumen 80 CRI 3500K LED module - 29WLED [PHILIPS] Optics/Features: A highly efficient, visually comfortable, architecturally styled recessed LED luminaire designed with a minimalistic strategy to achieve sustainable objectives. Low profile configuration is only 3" high with sloped sides for a sleek appearance. Clean, modern design provides architectural styling compatible with virtually any area. Soft opal diffuser with large luminous area minimizes apparent brightness and provides high visual comfort perfect for a wide variety of general lighting applications like offices, schools, retail, or healthcare. Four lumen packages over a wide range provide significant application flexibility over light levels and/or luminaire spacing. A high lumen package can be used in conjunction with wide luminaire spacing to reduce luminaire quantities and overall cost while maintaining good uniformity. Directs a controlled amount of light to the higher angles in the room to balance the brightness of the surfaces and eliminate "cave effect" while creating the impression of a larger, brighter space without glare. Excellent color rendering with a CRI of 80. LEDs are an excellent source for use with controls since dimming or frequent switching does not degrade the performance or life of the source. External sensors are available for use. Surface mount design requires no plenum space. Some DuaLED luminaires are DesignLights Consortium® qualified. Please see the DLC QPL list for exact catalog numbers. (www.designlights.org/QPL) 27L and 347V are not DLC qualified. Location/Remarks: Fixtures to be located in mechanical rooms, stairs		28 WATTS	120 V	Fixtures to remain energized at all times	LUMINAIRE: PHILIPS DUAL LED SURFACE DAY-BRITE ISDL27L835-4-D-UNV-DIM 1X4 FT
	EX	Description: Exterior wall Sconce Lamp: (1)9.6 watt 840 lumen 80 CRI 2700K LED module - EAHP1215WBR [EVERLIGHT] Optics/Features: Folded metal frame inspired by modern architecture. Mounts down only. LM-80 Certified; High Power COB & High CRI LED; Multi-Chip Solution; Dimension:12 mm x 15 mm x 1.6 mm; Main Parameters: Luminous Flux, Forward Voltage , Chromaticity and Color Rendering Index; RoHS compliant; Energy Star / ANSI Compliant Binning Structure; Typical Viewing Angle: 115° Location/Remarks: Fixtures to be located at dwelling unit exterior balconies		9.6 WATTS	120 V	Fixtures to be controlled by photocell	LUMINAIRE: LBL TARA 18 OD743BZLEDW

ARCHITECT:
MORALI ARCHITECTURE
505 8th AVENUE, SUITE 2202, NEW YORK, NY, 10018
TEL. 212 219 2091 E-MAIL: MSTUDIONY@AOL.COM

IMA ENGINEERING , PC
123-23 82 AVENUE, KEW GARDENS, NY, 11415 TEL: 718 268 8600

ADVANCED CLEANUP TECHNOLOGIES, INC.
110 MAIN STREET, SUITE 103, PORT WASHINGTON, NY, 11050

COPYRIGHT (C)
THESE PLAN ARE AN INSTRUMENT OF SERVICE AND ARE THE PROPERTY OF THE ARCHITECT.
This and all documents produced by this firm under this agreement shall remain the sole property of this firm and may not be used, copied, changed or distributed by the client or others without the written consent of this firm.
INFRINGEMENTS WILL BE PROSECUTED.

CONTRACTOR SHALL VERIFY ALL CONDITIONS AND MEASUREMENTS IN THE FIELD AND BE RESPONSIBLE FOR FIELD FIT AND QUANTITY OF WORK. NO ALLOWANCES SHALL BE MADE IN BEHALF OF THE CONTRACTOR FOR ANY ERROR OR NEGLECT ON HIS PART.

"THIS PLAN IS APPROVED ONLY FOR WORK INDICATED ON THE APPLICATION SPECIFICATION SHEET. ALL OTHER MATTERS SHOWN ARE NOT TO BE RELIED UPON, OR TO BE CONSIDERED AS EITHER BEING APPROVED OR IN ACCORDANCE WITH APPLICABLE CODES."

No.	Description	Date

PROJECT
36-37 31ST STREET
LONG ISLAND CITY, NY
11106

CELLAR FLOOR REFLECTED CEILING PLAN

SCALE : AS NOTED

SEAL: REGISTERED ARCHITECT ANTHONY J. MORALI 017683-1 STATE OF NEW YORK

Date	10.12.15
Project Number	1507
Drawn By	CI
Checked By	AM

A-400.00

FIRST FLOOR RCP

SCALE: $\frac{3}{16}$" = 1'-0"

Narrative A-401.00

Room Number/Type	Control Strategy Recommendation
Corridors/Elevator lobbies	Automatic on/off of 50% of fixtures. 50% of fixtures to remain energized at all times (i.e. emergency fixtures remain on).
Stairs	Astronomical timeclock with occupancy sensor to de-energize 50% of fixtures. 50% of fixtures to remain energized at all times.
Elec./Mechanical Rooms	Astronomical timeclock with occupancy sensor to de-energize 50% of fixtures. 50% of fixtures to remain energized at all times.
Commercial areas	Automatic on/off of 50% of fixtures. 50% of fixtures to remain energized at all times (i.e. emergency fixtures remain on).
Parking	Automatic on/off of 50% of fixtures. 50% of fixtures to remain energized at all times (i.e. emergency fixtures remain on).

R.C.P. LEGEND

Symbol	Description
	CEILING LIGHT-RECESSED
EM	CEILING LIGHT-RECESSED, W/ EMERGENCY BATTERY BACK UP
SH	SHOWER LIGHT-RECESSED, WATER PROOF
P	CEILING LIGHT-PENDANT
	WALL SCONCE
EX	WALL SCONCE (EXTERIOR)
	WALL SCONCE (CORRIDOR)
	UNDERCABINET LED STRIP WORK LIGHT
	FLUORESCENT CEILING LIGHT, SURFACE MOUNTED
EM	FLUORESCENT CEILING LIGHT, SURFACE MOUNTED W/ EMERGENCY BATTERY BACK UP
M	MOTION DETECTOR SENSOR
SM CO	SMOKE/CARBON MONOXIDE DETECTOR, HARD WIRED, WALL MOUNT
IC	INTERCOM, 52" AFF
T	THERMOSTAT
	PHONE / DATA OUTLET
	DUPLEX RECEPTACLE
	FLOOR RECEPTACLE
EX	DUPLEX RECEPTACLE, EXTERIOR
	QUAD RECEPTACLE
	EXIT SIGN W/ EMERGENCY LIGHTS, CEILING MOUNT
	FIRE ALARM SPEAKER
	12" DROP SOFFIT AT KITCHENETTES
	ELECTRIC PANEL
	SPRINKLER HEADS

LIGHT FIXTURE SCHEDULE

TYPE	SYMBOL	DESCRIPTION	PHOTOMETRY	SYSTEM WATTS	VOLTAGE	CONTROL INTENT	MANUFACTURER
L1		Description: Recessed LED fixture Lightolier Lytecaster Uniframe 6-3/4" with black baffle Lamp: (1) 433672 - 8A19/SLIM/2700 DIM 6/1 8-40W[450 LMS][2700K](PHILIPS) Optics/Features: Housing: (0.05") thick powder coated aluminum provides integrated thermal management allowing for a low profile at less than 3-1/2" tall. LED board: High efficiency mid-flux LED's. Mixing chamber: 98% reflective, highly diffuse film. Diffusion lens: (0.06") thick opal lens provides an even source of illumination. Retaining ring: (0.04") thick powder coated aluminum,secures module components. Reflector: 30% glass reinforced injection molded poly carbonate is durable and provides a 70° cutoff to the source. Retaining clips: 29 gauge Stainless Steel, allowstool-less installation of light engine to trim. Location/Remarks: Fixtures to be located in dwelling units at dropped ceiling areas		8 WATTS	120 V	Recessed fixtures shall be controlled by: LEVITON DECORA DSM10-1LZ Universal Decora Dimmable LED, Rocker-Slide Dimmer, 450W-120VAC Dimmable LED Single Pole or 3-Way White	LUMINAIRE: LIGHTOLIER - LYTECASTER - 1176LED09N27D1
L2	EM	Description: Recessed LED fixture Lightolier Lytecaster Uniframe 6-3/4" with black baffle Lamp: (1) 433672 - 8A19/SLIM/2700 DIM 6/1 8-40W[450 LMS][2700K](PHILIPS) Optics/Features: Housing: (0.05") thick powder coated aluminum provides integrated thermal management allowing for a low profile at less than 3-1/2" tall. LED board: High efficiency mid-flux LED's. Mixing chamber: 98% reflective, highly diffuse film. Diffusion lens: (0.06") thick opal lens provides an even source of illumination. Retaining ring: (0.04") thick powder coated aluminum,secures module components. Reflector: 30% glass reinforced injection molded poly carbonate is durable and provides a 70° cutoff to the source. Retaining clips: 29 gauge Stainless Steel, allowstool-less installation of light engine to trim. Location/Remarks: Fixtures to be located in public corridors and Elevator Lobbies		8 WATTS	120 V	Fixtures to remain energized at all times	LUMINAIRE: LIGHTOLIER - LYTECASTER - 1176LED09N27D1
L3	SH	Description: Recessed LED fixture Lightolier Lytecaster Uniframe 6-3/4" with opal disk for wet location Lamp: (1) 433672 - 8A19/SLIM/2700 DIM 6/1 8-40W[450 LMS][2700K](PHILIPS) Optics/Features: Housing: (0.05") thick powder coated aluminum provides integrated thermal management allowing for a low profile at less than 3-1/2" tall. LED board: High efficiency mid-flux LED's. Mixing chamber: 98% reflective, highly diffuse film. Diffusion lens: (0.06") thick opal lens provides an even source of illumination. Retaining ring: (0.04") thick powder coated aluminum,secures module components. Reflector: 30% glass reinforced injection molded poly carbonate is durable and provides a 70° cutoff to the source. Retaining clips: 29 gauge Stainless Steel, allowstool-less installation of light engine to trim. Location/Remarks: Fixtures to be located in public corridors and Elevator Lobbies		8 WATTS	120 V	Recessed fixtures shall be controlled by: LEVITON DECORA DSM10-1LZ Universal Decora Dimmable LED, Rocker-Slide Dimmer, 450W-120VAC Dimmable LED Single Pole or 3-Way White	LUMINAIRE: LIGHTOLIER - LYTECASTER - 1121LED09N27D1
L4	P	Description: PS Series Decorative, Vetro LED Pendant (straight) 2.375" Satin AL Lamp: (1) PS01LW40SAU - 7.5W[356 LMS][3000K](PHILIPS) Optics/Features: Power Head: Die cast and extruded aluminum components. Brushed and clear lacquer finish. Primary Diffuser: (SG01L) Triplex hand blown glass or (SA01L) opal acrylic. Outer Glass/Acrylic Assembly: (GLS01) A straight section of clear extruded glass with polished edges, (GLS02) a conical section of clear hand blown glass with polished edges, or (GLS01A) a straight section of clear acrylic. All outer assemblies come with a die cast aluminum holder ring with stainless steel support pins. Optical Mixing Chamber: Remote phosphor technology provides increased efficiency and color stability. Phosphor lens assembly positioned in front of LED array converts blue light to white and produces a wide even pattern of diffused light without bright spots created by individual LEDs. Uniform phosphor coating provides consistent, stable color with a shift of no more than +/-100K over life. Mixing chamber redirects scattered light back out through the emitting aperture. Thermal Management: Heat sink design maintains junction temperature for consistent, reliable performance and 50,000 hour lifetime at 70% lumen maintenance. Location/Remarks: Fixtures to be located in dwelling units at kitchen areas		7.5 WATTS	120 V	Fixtures shall be controlled by: LEVITON DECORA DSM10-1LZ Universal Decora Dimmable LED, Rocker-Slide Dimmer, 450W-120VAC Dimmable LED Single Pole or 3-Way White	LUMINAIRE: PHILIPS PS01LW40SAU Vetro LED PH 2.375" Satin AL
L5	PL	Description: Pendant light Lamp: (1)SM16-07-10D-830-03 - 8W [475 LMS][3000K][SORAA] Optics/Features: LBL Cypree Pendant Slender modern organic-shaped frosted glass. 8 watt replaceable 500 lumen 80 CRI 3000K LED SORAAÂ® module and 6' of field-cuttable suspension cable Location/Remarks: Fixtures to be located in Entry Lobby		8 WATTS	120 V	Fixtures to remain energized at all times	LUMINAIRE: LBL HS463FRSC-LEDS830MPT
L6	S	Description: Surface mounted light Lamp: (1) 6.5A19/2200-2700 DM 6/1 - 6.5W [450 LMS][2700K][PHILIPS] Optics/Features: 12.5W A19, 8W A19 and 17W A21 versions available, Smooth dimming to 10% of full light levels, Remote phosphor (yellow) disappears when energized to create even, soft white light, 25,000-hour rated average life+ Instant-on light Location/Remarks: Fixtures to be located in Dwelling unit closets		6.5 WATTS	120 V	Fixtures shall be controlled by: LEVITON DECORA DSM10-1LZ Universal Decora Dimmable LED, Rocker-Slide Dimmer, 450W-120VAC Dimmable LED Single Pole or 3-Way White	LUMINAIRE: KITCHLER 8881WH
L7		Description: Surface wall Sconce Lamp: (1)10 watt 800 lumen 80 CRI 3000K LED module - EAHP1215WBR [EVERLIGHT] Optics/Features: Hidden within a sleek metal body, an ultra-thin LED light guide panel produces plenty of task illumination ideal for the bath. A thin, forward facing light reveal adds a touch of elegance as the curved endcaps round out the linear nature of the Vertura 24 bathroom lighting fixture from LBL LIghting. Mounts vertically or horizontally. LM-80 Certified; High Power COB & High CRI LED; Multi-Chip Solution; Dimension:12 mm x 15 mm x 1.6 mm; Main Parameters: Luminous Flux, Forward Voltage , Chromaticity and Color Rendering Index; RoHS compliant; Energy Star / ANSI Compliant Binning Structure; Typical Viewing Angle: 115° Location/Remarks: Fixtures to be located in Dwelling unit Bathrooms		10 WATTS	120 V	Fixtures shall be controlled by: LEVITON DECORA DSM10-1LZ Universal Decora Dimmable LED, Rocker-Slide Dimmer, 450W-120VAC Dimmable LED Single Pole or 3-Way White	LUMINAIRE: LBL VERTURA 24 BA867SCLED830 SATIN NICKEL
L8		Description: Surface wall Sconce Lamp: (1)28 watt 2000 lumen 80 CRI 3000K LED module - EAHP1215WBR [EVERLIGHT] Optics/Features: Modern technology meets architectural form in this sophisticated and versatile ceiling light fixture. Riffing on the concept of an elongated 'V', the sleek aluminum body of the Vantra ceiling light from LBL Lighting also serves as the heat sink for the twin LED light guide panels. These visually floating light panels create a unique sense of wonder and offer a choice of outputs including 100% forward or direct/indirect light distribution Ceiling or wall mount. When mounted on the wall, mounts vertically or horizontally. LM-80 Certified; High Power COB & High CRI LED; Multi-Chip Solution; Dimension:12 mm x 15 mm x 1.6 mm; Main Parameters: Luminous Flux, Forward Voltage , Chromaticity and Color Rendering Index; RoHS compliant; Energy Star / ANSI Compliant Binning Structure; Typical Viewing Angle: 115° Location/Remarks: Fixtures to be located in Building corridors		28 WATTS	120 V	Fixtures to remain energized at all times	LUMINAIRE: LBL VANTRA FLUSH MOUNT FM853SCRF-LED830 SATIN NICKEL
L9	EX	Description: Exterior wall Sconce Lamp: (1)9.6 watt 840 lumen 80 CRI 2700K LED module - EAHP1215WBR [EVERLIGHT] Optics/Features: Folded metal frame inspired by modern architecture. Mounts down only. LM-80 Certified; High Power COB & High CRI LED; Multi-Chip Solution; Dimension:12 mm x 15 mm x 1.6 mm; Main Parameters: Luminous Flux, Forward Voltage , Chromaticity and Color Rendering Index; RoHS compliant; Energy Star / ANSI Compliant Binning Structure; Typical Viewing Angle: 115° Location/Remarks: Fixtures to be located at dwelling unit exterior balconies		9.6 WATTS	120 V	Fixtures shall be controlled by: LEVITON DECORA DSM10-1LZ Universal Decora Dimmable LED, Rocker-Slide Dimmer, 450W-120VAC Dimmable LED Single Pole or 3-Way White	LUMINAIRE: LBL TARA 18 OD743BZLEDW
L10		Description: Undercounter strip light Lamp: (1)10 watt 479 lumen 80 CRI 4000K LED module - 910503702218 [PHILIPS] Optics/Features: Housing Extruded aluminium, polycarbonate. White, Black, or Gray powder-coated finish. ; Lens: Polycarbonate; Fixture Connections Integral male / female connectors Temperature Ranges -4° – 122° F (-20° – 50° C) Operating -4° – 122° F (-20° – 50° C) Startup -40° – 176° F (-40° – 80° C) Storage Humidity 0 – 95%, non-condensing; Fixture Run Length Up to 50 ft (15.3 m) of fixtures in a single run, ≤ 324 W; Certification and SafetyCertification UL / cUL, F CC Class B, CE, C-Tick, ENERGY STAR (120 VAC); Environment Dry / Damp Location, IP50 Location/Remarks: Fixtures to be located under kitchen cabinetry		10 WATTS	120 V	Fixtures shall be controlled by: LEVITON DECORA DSM10-1LZ Universal Decora Dimmable LED, Rocker-Slide Dimmer, 450W-120VAC Dimmable LED Single Pole or 3-Way White	LUMINAIRE: PHILIPS eW PROFILE POWERCORE 4000K, 19.25 IN. 523-00002646
L11		Description: Common corridor pendant Lamp: (1)20 watt 1420 lumen 80 CRI 2700K LED module - 80-905 [KOLOURONE-SATCO] Optics/Features: 1-Light Flush Mounted Dome LED Ceiling Light in Polished Nickel Finish and Frosted GlassMotivation WITH 19.5W 120V 2700K 110 Degree Beam 30,000 Hour Circular LED Dimmable Light Engine - Self-contained simple plug and play design - Integrated power supply - No external driver, heat sink or drivers - Easily replaceable - Sleek, space-saving design - RU damp located listed Location/Remarks: Fixtures to be located in Building corridors		20 WATTS	120 V	Fixtures to remain energized at all times	LUMINAIRE: NUVO 62-302
L12	WP	Description: Common corridor pendant Lamp: (1)14 watt 710 lumen 80 CRI 4000K LED module - TLW10LED4KPCB-1 [PHILIPS] Optics/Features: 13.9 watt high-powered LED array; 50,000 hour life; Lightweight, compact design Sturdy die-cast aluminum housing; Architectural bronze UV resistant powder coat finish; UV stabilized polycarbonate lens/refractor UV stabilized polycarbonate front housing; Continuous silicone rubber gasket between housing and lens/cover; Energy-efficient, high-powered LED Array Provides 707 delivered lumens, LM79; Excellent heat management for long life Efficacy: 50.9 lumens per watt (LPW); CRI: 86; 4386 CCT Operating temperature: -25°C (-13°F) to 35°C (95°F) Voltage: 120V 50/60Hz; Factory-installed photocontrol; UL Listed for wet locations 5-year warranty Location/Remarks: Fixtures to be located in Building corridors		14 WATTS	120 V	Fixtures to be controlled by photocell	LUMINAIRE: PHILIPS TWILIGHTER LED WALL PAK TWL10LED4KPCB1
L13	EM	Description: Back of House surface mounted fixture Lamp: (1)28 watt 2763 lumen 80 CRI 3500K LED module - 29WLED [PHILIPS] Optics/Features: A highly efficient, visually comfortable, architecturally styled recessed LED luminaire designed with a minimalistic strategy to achieve sustainable objectives. Low profile configuration is only 3" high with sloped sides for a sleek appearance. Clean, modern design provides architectural styling compatible with virtually any area. Soft opal diffuser with large luminous area minimizes apparent brightness and provides high visual comfort perfect for a wide variety of general lighting applications like offices, schools, retail, or healthcare. Four lumen packages over a wide range provide significant application flexibility over light levels and/or luminaire spacing. A high lumen package can be used in conjunction with wide luminaire spacing to reduce luminaire quantities and overall cost while maintaining good uniformity. Directs a controlled amount of light to the higher angles in the room to balance the brightness of the surfaces and eliminate "cave effect" while creating the impression of a larger, brighter space without glare. Excellent color rendering with a CRI of 80. LEDs are an excellent source for use with controls since dimming or frequent switching does not degrade the performance or life of the source. External sensors are available for use. Surface mount design requires no plenum space. Some DuaLED luminaires are DesignLights Consortium® qualified. Please see the DLC QPL list for exact catalog numbers. (www.designlights.org/QPL) 27L and 347V are not DLC qualified. Location/Remarks: Fixtures to be located in mechanical rooms, stairs		28 WATTS	120 V	Fixtures to be controlled by motion sensor	LUMINAIRE: PHILIPS DUAL LED SURFACE DAY-BRITE ISDL27L835-4-D-UNV-DIM 1X4 FT
L14		Description: Back of House surface mounted fixture Lamp: (1)28 watt 2763 lumen 80 CRI 3500K LED module - 29WLED [PHILIPS] Optics/Features: A highly efficient, visually comfortable, architecturally styled recessed LED luminaire designed with a minimalistic strategy to achieve sustainable objectives. Low profile configuration is only 3" high with sloped sides for a sleek appearance. Clean, modern design provides architectural styling compatible with virtually any area. Soft opal diffuser with large luminous area minimizes apparent brightness and provides high visual comfort perfect for a wide variety of general lighting applications like offices, schools, retail, or healthcare. Four lumen packages over a wide range provide significant application flexibility over light levels and/or luminaire spacing. A high lumen package can be used in conjunction with wide luminaire spacing to reduce luminaire quantities and overall cost while maintaining good uniformity. Directs a controlled amount of light to the higher angles in the room to balance the brightness of the surfaces and eliminate "cave effect" while creating the impression of a larger, brighter space without glare. Excellent color rendering with a CRI of 80. LEDs are an excellent source for use with controls since dimming or frequent switching does not degrade the performance or life of the source. External sensors are available for use. Surface mount design requires no plenum space. Some DuaLED luminaires are DesignLights Consortium® qualified. Please see the DLC QPL list for exact catalog numbers. (www.designlights.org/QPL) 27L and 347V are not DLC qualified. Location/Remarks: Fixtures to be located in mechanical rooms, stairs		28 WATTS	120 V	Fixtures to remain energized at all times	LUMINAIRE: PHILIPS DUAL LED SURFACE DAY-BRITE ISDL27L835-4-D-UNV-DIM 1X4 FT
L15	EX	Description: Exterior wall Sconce Lamp: (1)9.6 watt 840 lumen 80 CRI 2700K LED module - EAHP1215WBR [EVERLIGHT] Optics/Features: Folded metal frame inspired by modern architecture. Mounts down only. LM-80 Certified; High Power COB & High CRI LED; Multi-Chip Solution; Dimension:12 mm x 15 mm x 1.6 mm; Main Parameters: Luminous Flux, Forward Voltage , Chromaticity and Color Rendering Index; RoHS compliant; Energy Star / ANSI Compliant Binning Structure; Typical Viewing Angle: 115° Location/Remarks: Fixtures to be located at dwelling unit exterior balconies		9.6 WATTS	120 V	Fixtures to be controlled by photocell	LUMINAIRE: LBL TARA 18 OD743BZLEDW

ARCHITECT:
MORALI ARCHITECTURE
505 8th AVENUE, SUITE 2202, NEW YORK, NY, 10018
TEL. 212 219 2091 E-MAIL: MSTUDIONY@AOL.COM

IMA ENGINEERING , PC
123-23 82 AVENUE, KEW GARDENS, NY, 11415 TEL: 718 268 8600

ADVANCED CLEANUP TECHNOLOGIES, INC.
110 MAIN STREET, SUITE 103, PORT WASHINGTON, NY, 11050

COPYRIGHT (C)
THESE PLAN ARE AN INSTRUMENT OF SERVICE AND ARE THE PROPERTY OF THE ARCHITECT.
This and all documents produced by this firm under this agreement shall remain the sole property of this firm and may not be used, copied, changed or distributed by the client or others without the written consent of this firm.
INFRINGEMENTS WILL BE PROSECUTED.

CONTRACTOR SHALL VERIFY ALL CONDITIONS AND MEASUREMENTS IN THE FIELD AND BE RESPONSIBLE FOR FIELD FIT AND QUANTITY OF WORK. NO ALLOWANCES SHALL BE MADE IN BEHALF OF THE CONTRACTOR FOR ANY ERROR OR NEGLECT ON HIS PART.

"THIS PLAN IS APPROVED ONLY FOR WORK INDICATED ON THE APPLICATION SPECIFICATION SHEET. ALL OTHER MATTERS SHOWN ARE NOT TO BE RELIED UPON, OR TO BE CONSIDERED AS EITHER BEING APPROVED OR IN ACCORDANCE WITH APPLICABLE CODES."

No.	Description	Date

PROJECT
36-37 31ST STREET
LONG ISLAND CITY, NY
11106

FIRST FLOOR REFLECTED CEILING PLAN

SCALE : AS NOTED

SEAL: REGISTERED ARCHITECT ANTHONY J. MORALI 017683-1 STATE OF NEW YORK

Date	10.12.15
Project Number	1507
Drawn By	CI
Checked By	AM

A-401.00

SECOND FLOOR RCP

SCALE: $\frac{3}{16}$" = 1'-0"

LIGHT FIXTURE SCHEDULE

TYPE	SYMBOL	DESCRIPTION	PHOTOMETRY	SYSTEM WATTS	VOLTAGE	CONTROL INTENT	MANUFACTURER
L1		Description: Recessed LED fixture Lightolier Lytecaster Uniframe 6-3/4" with black baffle Lamp: (1) 433672 - 8A19/SLIM/2700 DIM 6/1 8-40W[450 LMS][2700K](PHILIPS) Optics/Features: Housing: (0.05") thick powder coated aluminum provides integrated thermal management allowing for a low profile at less than 3-1/2" tall. LED board: High efficiency mid-flux LED's. Mixing chamber: 98% reflective, highly diffuse film. Diffusion lens: (0.06") thick opal lens provides an even source of illumination. Retaining ring: (0.04") thick powder coated aluminum,secures module components. Reflector: 30% glass reinforced injection molded poly carbonate is durable and provides a 70° cutoff to the source. Retaining clips: 29 gauge Stainless Steel, allowstool-less installation of light engine to trim. Location/Remarks: Fixtures to be located in dwelling units at dropped ceiling areas		8 WATTS	120 V	Recessed fixtures shall be controlled by: LEVITON DECORA DSM10-1LZ Universal Decora Dimmable LED, Rocker-Slide Dimmer, 450W-120VAC Dimmable LED Single Pole or 3-Way White	LUMINAIRE: LIGHTOLIER - LYTECASTER - 1176LED09N27D1
L2	EM	Description: Recessed LED fixture Lightolier Lytecaster Uniframe 6-3/4" with black baffle Lamp: (1) 433672 - 8A19/SLIM/2700 DIM 6/1 8-40W[450 LMS][2700K](PHILIPS) Optics/Features: Housing: (0.05") thick powder coated aluminum provides integrated thermal management allowing for a low profile at less than 3-1/2" tall. LED board: High efficiency mid-flux LED's. Mixing chamber: 98% reflective, highly diffuse film. Diffusion lens: (0.06") thick opal lens provides an even source of illumination. Retaining ring: (0.04") thick powder coated aluminum,secures module components. Reflector: 30% glass reinforced injection molded poly carbonate is durable and provides a 70° cutoff to the source. Retaining clips: 29 gauge Stainless Steel, allowstool-less installation of light engine to trim. Location/Remarks: Fixtures to be located in public corridors and Elevator Lobbies		8 WATTS	120 V	Fixtures to remain energized at all times	LUMINAIRE: LIGHTOLIER - LYTECASTER - 1176LED09N27D1
L3	SH	Description: Recessed LED fixture Lightolier Lytecaster Uniframe 6-3/4" with opal disk for wet location Lamp: (1) 433672 - 8A19/SLIM/2700 DIM 6/1 8-40W[450 LMS][2700K](PHILIPS) Optics/Features: Housing: (0.05") thick powder coated aluminum provides integrated thermal management allowing for a low profile at less than 3-1/2" tall. LED board: High efficiency mid-flux LED's. Mixing chamber: 98% reflective, highly diffuse film. Diffusion lens: (0.06") thick opal lens provides an even source of illumination. Retaining ring: (0.04") thick powder coated aluminum,secures module components. Reflector: 30% glass reinforced injection molded poly carbonate is durable and provides a 70° cutoff to the source. Retaining clips: 29 gauge Stainless Steel, allowstool-less installation of light engine to trim. Location/Remarks: Fixtures to be located in public corridors and Elevator Lobbies		8 WATTS	120 V	Recessed fixtures shall be controlled by: LEVITON DECORA DSM10-1LZ Universal Decora Dimmable LED, Rocker-Slide Dimmer, 450W-120VAC Dimmable LED Single Pole or 3-Way White	LUMINAIRE: LIGHTOLIER - LYTECASTER - 1121LED09N27D1
L4	P	Description: PS Series Decorative, Vetro LED Pendant (straight) 2.375" Satin AL Lamp: (1) PS01LW40SAU - 7.5W[356 LMS][3000K](PHILIPS) Optics/Features: Power Head: Die cast and extruded aluminum components. Brushed and clear lacquer finish. Primary Diffuser: (SG01L) Triplex hand blown glass or (SA01L) opal acrylic. Outer Glass/Acrylic Assembly: (GLS01) A straight section of clear extruded glass with polished edges, (GLS02) a conical section of clear hand blown glass with polished edges, or (GLS01A) a straight section of clear acrylic. All outer assemblies come with a die cast aluminum holder ring with stainless steel support pins. Optical Mixing Chamber: Remote phosphor technology provides increased efficiency and color stability. Phosphor lens assembly positioned in front of LED array converts blue light to white and produces a wide even pattern of diffused light without bright spots created by individual LEDs. Uniform phosphor coating provides consistent, stable color with a shift of no more than +/-100K over life. Mixing chamber redirects scattered light back out through the emitting aperture. Thermal Management: Heat sink design maintains junction temperature for consistent, reliable performance and 50,000 hour lifetime at 70% lumen maintenance. Location/Remarks: Fixtures to be located in dwelling units at kitchen areas		7.5 WATTS	120 V	Fixtures shall be controlled by: LEVITON DECORA DSM10-1LZ Universal Decora Dimmable LED, Rocker-Slide Dimmer, 450W-120VAC Dimmable LED Single Pole or 3-Way White	LUMINAIRE: PHILIPS PS01LW40SAU Vetro LED PH 2.375" Satin AL
L5	PL	Description: Pendant light Lamp: (1)SM16-07-10D-830-03 - 8W [475 LMS][3000K][SORAA] Optics/Features: LBL Cypree Pendant Slender modern organic-shaped frosted glass. 8 watt replaceable 500 lumen 80 CRI 3000K LED SORAAÂ® module and 6' of field-cuttable suspension cable Location/Remarks: Fixtures to be located in Entry Lobby		8 WATTS	120 V	Fixtures to remain energized at all times	LUMINAIRE: LBL HS463FRSC-LEDS830MPT
L6	S	Description: Surface mounted light Lamp: (1) 6.5A19/2200-2700 DM 6/1 - 6.5W [450 LMS][2700K][PHILIPS] Optics/Features: 12.5W A19, 8W A19 and 17W A21 versions available, Smooth dimming to 10% of full light levels, Remote phosphor (yellow) disappears when energized to create even, soft white light, 25,000-hour rated average life+ Instant-on light Location/Remarks: Fixtures to be located in Dwelling unit closets		6.5 WATTS	120 V	Fixtures shall be controlled by: LEVITON DECORA DSM10-1LZ Universal Decora Dimmable LED, Rocker-Slide Dimmer, 450W-120VAC Dimmable LED Single Pole or 3-Way White	LUMINAIRE: KITCHLER 8881WH
L7		Description: Surface wall Sconce Lamp: (1)10 watt 800 lumen 80 CRI 3000K LED module - EAHP1215WBR [EVERLIGHT] Optics/Features: Hidden within a sleek metal body, an ultra-thin LED light guide panel produces plenty of task illumination ideal for the bath. A thin, forward facing light reveal adds a touch of elegance as the curved endcaps round out the linear nature of the Vertura 24 bathroom lighting fixture from LBL LIghting. Mounts vertically or horizontally. LM-80 Certified; High Power COB & High CRI LED; Multi-Chip Solution; Dimension:12 mm x 15 mm x 1.6 mm; Main Parameters: Luminous Flux, Forward Voltage , Chromaticity and Color Rendering Index; RoHS compliant; Energy Star / ANSI Compliant Binning Structure; Typical Viewing Angle: 115° Location/Remarks: Fixtures to be located in Dwelling unit Bathrooms		10 WATTS	120 V	Fixtures shall be controlled by: LEVITON DECORA DSM10-1LZ Universal Decora Dimmable LED, Rocker-Slide Dimmer, 450W-120VAC Dimmable LED Single Pole or 3-Way White	LUMINAIRE: LBL VERTURA 24 BA867SCLED830 SATIN NICKEL
L8		Description: Surface wall Sconce Lamp: (1)28 watt 2000 lumen 80 CRI 3000K LED module - EAHP1215WBR [EVERLIGHT] Optics/Features: Modern technology meets architectural form in this sophisticated and versatile ceiling light fixture. Riffing on the concept of an elongated 'V', the sleek aluminum body of the Vantra ceiling light from LBL Lighting also serves as the heat sink for the twin LED light guide panels. These visually floating light panels create a unique sense of wonder and offer a choice of outputs including 100% forward or direct/indirect light distribution Ceiling or wall mount. When mounted on the wall, mounts vertically or horizontally. LM-80 Certified; High Power COB & High CRI LED; Multi-Chip Solution; Dimension:12 mm x 15 mm x 1.6 mm; Main Parameters: Luminous Flux, Forward Voltage , Chromaticity and Color Rendering Index; RoHS compliant; Energy Star / ANSI Compliant Binning Structure; Typical Viewing Angle: 115° Location/Remarks: Fixtures to be located in Building corridors		28 WATTS	120 V	Fixtures to remain energized at all times	LUMINAIRE: LBL VANTRA FLUSH MOUNT FM853SCRF-LED830 SATIN NICKEL
L9	EX	Description: Exterior wall Sconce Lamp: (1)9.6 watt 840 lumen 80 CRI 2700K LED module - EAHP1215WBR [EVERLIGHT] Optics/Features: Folded metal frame inspired by modern architecture. Mounts down only. LM-80 Certified; High Power COB & High CRI LED; Multi-Chip Solution; Dimension:12 mm x 15 mm x 1.6 mm; Main Parameters: Luminous Flux, Forward Voltage , Chromaticity and Color Rendering Index; RoHS compliant; Energy Star / ANSI Compliant Binning Structure; Typical Viewing Angle: 115° Location/Remarks: Fixtures to be located at dwelling unit exterior balconies		9.6 WATTS	120 V	Fixtures shall be controlled by: LEVITON DECORA DSM10-1LZ Universal Decora Dimmable LED, Rocker-Slide Dimmer, 450W-120VAC Dimmable LED Single Pole or 3-Way White	LUMINAIRE: LBL TARA 18 OD743BZLEDW
L10		Description: Undercounter strip light Lamp: (1)10 watt 479 lumen 80 CRI 4000K LED module - 910503702218 [PHILIPS] Optics/Features: Housing Extruded aluminium, polycarbonate. White, Black, or Gray powder-coated finish. ; Lens: Polycarbonate; Fixture Connections Integral male / female connectors Temperature Ranges -4° – 122° F (-20° – 50° C) Operating -4° – 122° F (-20° – 50° C) Startup -40° – 176° F (-40° – 80° C) Storage Humidity 0 – 95%, non-condensing; Fixture Run Length Up to 50 ft (15.3 m) of fixtures in a single run, ≤ 324 W; Certification and SafetyCertification UL / cUL, F CC Class B, CE, C-Tick, ENERGY STAR (120 VAC); Environment Dry / Damp Location, IP50 Location/Remarks: Fixtures to be located under kitchen cabinetry		10 WATTS	120 V	Fixtures shall be controlled by: LEVITON DECORA DSM10-1LZ Universal Decora Dimmable LED, Rocker-Slide Dimmer, 450W-120VAC Dimmable LED Single Pole or 3-Way White	LUMINAIRE: PHILIPS eW PROFILE POWERCORE 4000K, 19.25 IN. 523-00002646
L11		Description: Common corridor pendant Lamp: (1)20 watt 1420 lumen 80 CRI 2700K LED module - 80-905 [KOLOURONE-SATCO] Optics/Features: 1-Light Flush Mounted Dome LED Ceiling Light in Polished Nickel Finish and Frosted GlassMotivation WITH 19.5W 120V 2700K 110 Degree Beam 30,000 Hour Circular LED Dimmable Light Engine - Self-contained simple plug and play design - Integrated power supply - No external driver, heat sink or drivers - Easily replaceable - Sleek, space-saving design - RU damp located listed Location/Remarks: Fixtures to be located in Building corridors		20 WATTS	120 V	Fixtures to remain energized at all times	LUMINAIRE: NUVO 62-302
L12	WP	Description: Common corridor pendant Lamp: (1)14 watt 710 lumen 80 CRI 4000K LED module - TLW10LED4KPCB-1 [PHILIPS] Optics/Features: 13.9 watt high-powered LED array; 50,000 hour life; Lightweight, compact design Sturdy die-cast aluminum housing; Architectural bronze UV resistant powder coat finish; UV stabilized polycarbonate lens/refractor UV stabilized polycarbonate front housing; Continuous silicone rubber gasket between housing and lens/cover; Energy-efficient, high-powered LED Array Provides 707 delivered lumens, LM79; Excellent heat management for long life Efficacy: 50.9 lumens per watt (LPW); CRI: 86; 4386 CCT Operating temperature: -25°C (-13°F) to 35°C (95°F) Voltage: 120V 50/60Hz; Factory-installed photocontrol; UL Listed for wet locations 5-year warranty Location/Remarks: Fixtures to be located in Building corridors		14 WATTS	120 V	Fixtures to be controlled by photocell	LUMINAIRE: PHILIPS TWILIGHTER LED WALL PAK TWL10LED4KPCB1
L13	EM	Description: Back of House surface mounted fixture Lamp: (1)28 watt 2763 lumen 80 CRI 3500K LED module - 29WLED [PHILIPS] Optics/Features: A highly efficient, visually comfortable, architecturally styled recessed LED luminaire designed with a minimalistic strategy to achieve sustainable objectives. Low profile configuration is only 3" high with sloped sides for a sleek appearance. Clean, modern design provides architectural styling compatible with virtually any area. Soft opal diffuser with large luminous area minimizes apparent brightness and provides high visual comfort perfect for a wide variety of general lighting applications like offices, schools, retail, or healthcare. Four lumen packages over a wide range provide significant application flexibility over light levels and/or luminaire spacing. A high lumen package can be used in conjunction with wide luminaire spacing to reduce luminaire quantities and overall cost while maintaining good uniformity. Directs a controlled amount of light to the higher angles in the room to balance the brightness of the surfaces and eliminate "cave effect" while creating the impression of a larger, brighter space without glare. Excellent color rendering with a CRI of 80. LEDs are an excellent source for use with controls since dimming or frequent switching does not degrade the performance or life of the source. External sensors are available for use. Surface mount design requires no plenum space. Some DuaLED luminaires are DesignLights Consortium® qualified. Please see the DLC QPL list for exact catalog numbers. (www.designlights.org/QPL) 27L and 347V are not DLC qualified. Location/Remarks: Fixtures to be located in mechanical rooms, stairs		28 WATTS	120 V	Fixtures to be controlled by motion sensor	LUMINAIRE: PHILIPS DUAL LED SURFACE DAY-BRITE ISDL27L835-4-D-UNV-DIM 1X4 FT
L14		Description: Back of House surface mounted fixture Lamp: (1)28 watt 2763 lumen 80 CRI 3500K LED module - 29WLED [PHILIPS] Optics/Features: A highly efficient, visually comfortable, architecturally styled recessed LED luminaire designed with a minimalistic strategy to achieve sustainable objectives. Low profile configuration is only 3" high with sloped sides for a sleek appearance. Clean, modern design provides architectural styling compatible with virtually any area. Soft opal diffuser with large luminous area minimizes apparent brightness and provides high visual comfort perfect for a wide variety of general lighting applications like offices, schools, retail, or healthcare. Four lumen packages over a wide range provide significant application flexibility over light levels and/or luminaire spacing. A high lumen package can be used in conjunction with wide luminaire spacing to reduce luminaire quantities and overall cost while maintaining good uniformity. Directs a controlled amount of light to the higher angles in the room to balance the brightness of the surfaces and eliminate "cave effect" while creating the impression of a larger, brighter space without glare. Excellent color rendering with a CRI of 80. LEDs are an excellent source for use with controls since dimming or frequent switching does not degrade the performance or life of the source. External sensors are available for use. Surface mount design requires no plenum space. Some DuaLED luminaires are DesignLights Consortium® qualified. Please see the DLC QPL list for exact catalog numbers. (www.designlights.org/QPL) 27L and 347V are not DLC qualified. Location/Remarks: Fixtures to be located in mechanical rooms, stairs		28 WATTS	120 V	Fixtures to remain energized at all times	LUMINAIRE: PHILIPS DUAL LED SURFACE DAY-BRITE ISDL27L835-4-D-UNV-DIM 1X4 FT
L15	EX	Description: Exterior wall Sconce Lamp: (1)9.6 watt 840 lumen 80 CRI 2700K LED module - EAHP1215WBR [EVERLIGHT] Optics/Features: Folded metal frame inspired by modern architecture. Mounts down only. LM-80 Certified; High Power COB & High CRI LED; Multi-Chip Solution; Dimension:12 mm x 15 mm x 1.6 mm; Main Parameters: Luminous Flux, Forward Voltage , Chromaticity and Color Rendering Index; RoHS compliant; Energy Star / ANSI Compliant Binning Structure; Typical Viewing Angle: 115° Location/Remarks: Fixtures to be located at dwelling unit exterior balconies		9.6 WATTS	120 V	Fixtures to be controlled by photocell	LUMINAIRE: LBL TARA 18 OD743BZLEDW

Narrative A-402.00

Room Number/Type	Control Strategy Recommendation
Corridors/Elevator lobbies	Automatic on/off of 50% of fixtures. 50% of fixtures to remain energized at all times (i.e. emergency fixtures remain on).
Stairs	Astronomical timeclock with occupancy sensor to de-energize 50% of fixtures. 50% of fixtures to remain energized at all times.
Elec./Mechanical Rooms	Astronomical timeclock with occupancy sensor to de-energize 50% of fixtures. 50% of fixtures to remain energized at all times.
Dwelling Units	Local switches to control fixtures in dwelling units (manual off/on). Fixtures to remain energized at all times
Commerical Areas	Automatic on/off of 50% of fixtures to remain energized at all times (i.e. emergency fixtures remain on.)
Balconies	Local switches to control fixtures in dwelling units (manual off/on). Fixtures to remain energized at all times

R.C.P. LEGEND

Symbol	Description
⊕	CEILING LIGHT-RECESSED
⊕ EM	CEILING LIGHT-RECESSED, W/ EMERGENCY BATTERY BACK UP
⊕ SH	SHOWER LIGHT-RECESSED, WATER PROOF
⊕ P	CEILING LIGHT-PENDANT
	WALL SCONCE
EX	WALL SCONCE (EXTERIOR)
	WALL SCONCE (CORRIDOR)
	UNDERCABINET LED STRIP WORK LIGHT
	FLUORESCENT CEILING LIGHT, SURFACE MOUNTED
EM	FLUORESCENT CEILING LIGHT, SURFACE MOUNTED W/ EMERGENCY BATTERY BACK UP
M	MOTION DETECTOR SENSOR
SM CO	SMOKE/CARBON MONOXIDE DETECTOR, HARD WIRED, WALL MOUNT
IC	INTERCOM, 52" AFF
T	THERMOSTAT
	PHONE / DATA OUTLET
	DUPLEX RECEPTACLE
	FLOOR RECEPTACLE
EX	DUPLEX RECEPTACLE, EXTERIOR
	QUAD RECEPTACLE
	EXIT SIGN W/ EMERGENCY LIGHTS, CEILING MOUNT
	FIRE ALARM SPEAKER
	12" DROP SOFFIT AT KITCHENETTES
	ELECTRIC PANEL
▼ ●	SPRINKLER HEADS

ARCHITECT:

MORALI ARCHITECTURE

505 8th AVENUE, SUITE 2202, NEW YORK, NY, 10018

TEL. 212 219 2091 E-MAIL: MSTUDIONY@AOL.COM

IMA ENGINEERING , PC

123-23 82 AVENUE, KEW GARDENS, NY, 11415 TEL: 718 268 8600

ADVANCED CLEANUP TECHNOLOGIES, INC.

110 MAIN STREET, SUITE 103, PORT WASHINGTON, NY, 11050

COPYRIGHT (C)
THESE PLAN ARE AN INSTRUMENT OF SERVICE AND ARE THE PROPERTY OF THE ARCHITECT.
This and all documents produced by this firm under this agreement shall remain the sole property of this firm and may not be used, copied, changed or distributed by the client or others without the written consent of this firm.
INFRINGEMENTS WILL BE PROSECUTED.

CONTRACTOR SHALL VERIFY ALL CONDITIONS AND MEASUREMENTS IN THE FIELD AND BE RESPONSIBLE FOR FIELD FIT AND QUANTITY OF WORK. NO ALLOWANCES SHALL BE MADE IN BEHALF OF THE CONTRACTOR FOR ANY ERROR OR NEGLECT ON HIS PART.

"THIS PLAN IS APPROVED ONLY FOR WORK INDICATED ON THE APPLICATION SPECIFICATION SHEET. ALL OTHER MATTERS SHOWN ARE NOT TO BE RELIED UPON, OR TO BE CONSIDERED AS EITHER BEING APPROVED OR IN ACCORDANCE WITH APPLICABLE CODES."

No.	Description	Date

PROJECT

36-37 31ST STREET
LONG ISLAND CITY, NY
11106

SECOND FLOOR REFLECTED CEILING PLAN

SCALE : AS NOTED

SEAL: REGISTERED ARCHITECT ANTHONY J. MORALI 017683-1 STATE OF NEW YORK

Date	10.12.15
Project Number	1507
Drawn By	CI
Checked By	AM

A-402.00

THIRD FLOOR RCP
SCALE: $\frac{3}{16}$" = 1'-0"

LIGHT FIXTURE SCHEDULE

TYPE	SYMBOL	DESCRIPTION	PHOTOMETRY	SYSTEM WATTS	VOLTAGE	CONTROL INTENT	MANUFACTURER
L1	⊕	Description: Recessed LED fixture Lightolier Lytecaster Uniframe 6-3/4" with black baffle Lamp: (1) 433672 - 8A19/SLIM/2700 DIM 6/1 8-40W[450 LMS][2700K](PHILIPS) Optics/Features: Housing: (0.05") thick powder coated aluminum provides integrated thermal management allowing for a low profile at less than 3-1/2" tall. LED board: High efficiency mid-flux LED's. Mixing chamber: 98% reflective, highly diffuse film. Diffusion lens: (0.06") thick opal lens provides an even source of illumination. Retaining ring: (0.04") thick powder coated aluminum,secures module components. Reflector: 30% glass reinforced injection molded poly carbonate is durable and provides a 70° cutoff to the source. Retaining clips: 29 gauge Stainless Steel, allowstool-less installation of light engine to trim. Location/Remarks: Fixtures to be located in dwelling units at dropped ceiling areas		8 WATTS	120 V	Recessed fixtures shall be controlled by: LEVITON DECORA DSM10-1LZ Universal Decora Dimmable LED, Rocker-Slide Dimmer, 450W-120VAC Dimmable LED Single Pole or 3-Way White	LUMINAIRE: LIGHTOLIER - LYTECASTER - 1176LED09N27D1
L2	⊕EM	Description: Recessed LED fixture Lightolier Lytecaster Uniframe 6-3/4" with black baffle Lamp: (1) 433672 - 8A19/SLIM/2700 DIM 6/1 8-40W[450 LMS][2700K](PHILIPS) Optics/Features: Housing: (0.05") thick powder coated aluminum provides integrated thermal management allowing for a low profile at less than 3-1/2" tall. LED board: High efficiency mid-flux LED's. Mixing chamber: 98% reflective, highly diffuse film. Diffusion lens: (0.06") thick opal lens provides an even source of illumination. Retaining ring: (0.04") thick powder coated aluminum,secures module components. Reflector: 30% glass reinforced injection molded poly carbonate is durable and provides a 70° cutoff to the source. Retaining clips: 29 gauge Stainless Steel, allowstool-less installation of light engine to trim. Location/Remarks: Fixtures to be located in public corridors and Elevator Lobbies		8 WATTS	120 V	Fixtures to remain energized at all times	LUMINAIRE: LIGHTOLIER - LYTECASTER - 1176LED09N27D1
L3	⊕SH	Description: Recessed LED fixture Lightolier Lytecaster Uniframe 6-3/4" with opal disk for wet location Lamp: (1) 433672 - 8A19/SLIM/2700 DIM 6/1 8-40W[450 LMS][2700K](PHILIPS) Optics/Features: Housing: (0.05") thick powder coated aluminum provides integrated thermal management allowing for a low profile at less than 3-1/2" tall. LED board: High efficiency mid-flux LED's. Mixing chamber: 98% reflective, highly diffuse film. Diffusion lens: (0.06") thick opal lens provides an even source of illumination. Retaining ring: (0.04") thick powder coated aluminum,secures module components. Reflector: 30% glass reinforced injection molded poly carbonate is durable and provides a 70° cutoff to the source. Retaining clips: 29 gauge Stainless Steel, allowstool-less installation of light engine to trim. Location/Remarks: Fixtures to be located in public corridors and Elevator Lobbies		8 WATTS	120 V	Recessed fixtures shall be controlled by: LEVITON DECORA DSM10-1LZ Universal Decora Dimmable LED, Rocker-Slide Dimmer, 450W-120VAC Dimmable LED Single Pole or 3-Way White	LUMINAIRE: LIGHTOLIER - LYTECASTER - 1121LED09N27D1
L4	⊕P	Description: PS Series Decorative, Vetro LED Pendant (straight) 2.375" Satin AL Lamp: (1) PS01LW40SAU - 7.5W[356 LMS][3000K](PHILIPS) Optics/Features: Power Head: Die cast and extruded aluminum components. Brushed and clear lacquer finish. Primary Diffuser: (SG01L) Triplex hand blown glass or (SA01L) opal acrylic. Outer Glass/Acrylic Assembly: (GLS01) A straight section of clear extruded glass with polished edges, (GLS02) a conical section of clear hand blown glass with polished edges, or (GLS01A) a straight section of clear acrylic. All outer assemblies come with a die cast aluminum holder ring with stainless steel support pins. Optical Mixing Chamber: Remote phosphor technology provides increased efficiency and color stability. Phosphor lens assembly positioned in front of LED array converts blue light to white and produces a wide even pattern of diffused light without bright spots created by individual LEDs. Uniform phosphor coating provides consistent, stable color with a shift of no more than +/-100K over life. Mixing chamber redirects scattered light back out through the emitting aperture. Thermal Management: Heat sink design maintains junction temperature for consistent, reliable performance and 50,000 hour lifetime at 70% lumen maintenance. Location/Remarks: Fixtures to be located in dwelling units at kitchen areas		7.5 WATTS	120 V	Fixtures shall be controlled by: LEVITON DECORA DSM10-1LZ Universal Decora Dimmable LED, Rocker-Slide Dimmer, 450W-120VAC Dimmable LED Single Pole or 3-Way White	LUMINAIRE: PHILIPS PS01LW40SAU Vetro LED PH 2.375" Satin AL
L5	⊕PL	Description: Pendant light Lamp: (1)SM16-07-10D-830-03 - 8W [475 LMS][3000K][SORAA] Optics/Features: LBL Cypree Pendant Slender modern organic-shaped frosted glass. 8 watt replaceable 500 lumen 80 CRI 3000K LED SORAAÂ® module and 6' of field-cuttable suspension cable Location/Remarks: Fixtures to be located in Entry Lobby		8 WATTS	120 V	Fixtures to remain energized at all times	LUMINAIRE: LBL HS463FRSC-LEDS830MPT
L6	⊕S	Description: Surface mounted light Lamp: (1) 6.5A19/2200-2700 DM 6/1 - 6.5W [450 LMS][2700K][PHILIPS] Optics/Features: 12.5W A19, 8W A19 and 17W A21 versions available, Smooth dimming to 10% of full light levels, Remote phosphor (yellow) disappears when energized to create even, soft white light, 25,000-hour rated average life+ Instant-on light Location/Remarks: Fixtures to be located in Dwelling unit closets		6.5 WATTS	120 V	Fixtures shall be controlled by: LEVITON DECORA DSM10-1LZ Universal Decora Dimmable LED, Rocker-Slide Dimmer, 450W-120VAC Dimmable LED Single Pole or 3-Way White	LUMINAIRE: KITCHLER 8881WH
L7	⊢⊕	Description: Surface wall Sconce Lamp: (1)10 watt 800 lumen 80 CRI 3000K LED module - EAHP1215WBR [EVERLIGHT] Optics/Features: Hidden within a sleek metal body, an ultra-thin LED light guide panel produces plenty of task illumination ideal for the bath. A thin, forward facing light reveal adds a touch of elegance as the curved endcaps round out the linear nature of the Vertura 24 bathroom lighting fixture from LBL Lighting. Mounts vertically or horizontally. LM-80 Certified; High Power COB & High CRI LED; Multi-Chip Solution; Dimension:12 mm x 15 mm x 1.6 mm; Main Parameters: Luminous Flux, Forward Voltage , Chromaticity and Color Rendering Index; RoHS compliant; Energy Star / ANSI Compliant Binning Structure; Typical Viewing Angle: 115° Location/Remarks: Fixtures to be located in Dwelling unit Bathrooms		10 WATTS	120 V	Fixtures shall be controlled by: LEVITON DECORA DSM10-1LZ Universal Decora Dimmable LED, Rocker-Slide Dimmer, 450W-120VAC Dimmable LED Single Pole or 3-Way White	LUMINAIRE: LBL VERTURA 24 BA867SCLED830 SATIN NICKEL
L8	⊕ (corridor)	Description: Surface wall Sconce Lamp: (1)28 watt 2000 lumen 80 CRI 3000K LED module - EAHP1215WBR [EVERLIGHT] Optics/Features: Modern technology meets architectural form in this sophisticated and versatile ceiling light fixture. Riffing on the concept of an elongated 'V', the sleek aluminum body of the Vantra ceiling light from LBL Lighting also serves as the heat sink for the twin LED light guide panels. These visually floating light panels create a unique sense of wonder and offer a choice of outputs including 100% forward or direct/indirect light distribution Ceiling or wall mount. When mounted on the wall, mounts vertically or horizontally. LM-80 Certified; High Power COB & High CRI LED; Multi-Chip Solution; Dimension:12 mm x 15 mm x 1.6 mm; Main Parameters: Luminous Flux, Forward Voltage , Chromaticity and Color Rendering Index; RoHS compliant; Energy Star / ANSI Compliant Binning Structure; Typical Viewing Angle: 115° Location/Remarks: Fixtures to be located in Building corridors		28 WATTS	120 V	Fixtures to remain energized at all times	LUMINAIRE: LBL VANTRA FLUSH MOUNT FM853SCRF-LED830 SATIN NICKEL
L9	⊢⊕EX	Description: Exterior wall Sconce Lamp: (1)9.6 watt 840 lumen 80 CRI 2700K LED module - EAHP1215WBR [EVERLIGHT] Optics/Features: Folded metal frame inspired by modern architecture. Mounts down only. LM-80 Certified; High Power COB & High CRI LED; Multi-Chip Solution; Dimension:12 mm x 15 mm x 1.6 mm; Main Parameters: Luminous Flux, Forward Voltage , Chromaticity and Color Rendering Index; RoHS compliant; Energy Star / ANSI Compliant Binning Structure; Typical Viewing Angle: 115° Location/Remarks: Fixtures to be located at dwelling unit exterior balconies		9.6 WATTS	120 V	Fixtures shall be controlled by: LEVITON DECORA DSM10-1LZ Universal Decora Dimmable LED, Rocker-Slide Dimmer, 450W-120VAC Dimmable LED Single Pole or 3-Way White	LUMINAIRE: LBL TARA 18 OD743BZLEDW
L10	——	Description: Undercounter strip light Lamp: (1)10 watt 479 lumen 80 CRI 4000K LED module - 910503702218 [PHILIPS] Optics/Features: Housing Extruded aluminium, polycarbonate. White, Black, or Gray powder-coated finish. ; Lens: Polycarbonate; Fixture Connections Integral male / female connectors Temperature Ranges -4° – 122° F (-20° – 50° C) Operating -4° – 122° F (-20° – 50° C) Startup -40° – 176° F (-40° – 80° C) Storage Humidity 0 – 95%, non-condensing; Fixture Run Length Up to 50 ft (15.3 m) of fixtures in a single run, ≤ 324 W; Certification and SafetyCertification UL / cUL, F CC Class B, CE, C-Tick, ENERGY STAR (120 VAC); Environment Dry / Damp Location, IP50 Location/Remarks: Fixtures to be located under kitchen cabinetry		10 WATTS	120 V	Fixtures shall be controlled by: LEVITON DECORA DSM10-1LZ Universal Decora Dimmable LED, Rocker-Slide Dimmer, 450W-120VAC Dimmable LED Single Pole or 3-Way White	LUMINAIRE: PHILIPS eW PROFILE POWERCORE 4000K, 19.25 IN. 523-00002646
L11	⊕	Description: Common corridor pendant Lamp: (1)20 watt 1420 lumen 80 CRI 2700K LED module - 80-905 [KOLOURONE-SATCO] Optics/Features: 1-Light Flush Mounted Dome LED Ceiling Light in Polished Nickel Finish and Frosted GlassMotivation WITH 19.5W 120V 2700K 110 Degree Beam 30,000 Hour Circular LED Dimmable Light Engine - Self-contained simple plug and play design - Integrated power supply - No external driver, heat sink or drivers - Easily replaceable - Sleek, space-saving design - RU damp located listed Location/Remarks: Fixtures to be located in Building corridors		20 WATTS	120 V	Fixtures to remain energized at all times	LUMINAIRE: NUVO 62-302
L12	⊢⊕WP	Description: Common corridor pendant Lamp: (1)14 watt 710 lumen 80 CRI 4000K LED module - TLW10LED4KPCB-1 [PHILIPS] Optics/Features: 13.9 watt high-powered LED array; 50,000 hour life; Lightweight, compact design Sturdy die-cast aluminum housing; Architectural bronze UV resistant powder coat finish; UV stabilized polycarbonate lens/refractor UV stabilized polycarbonate front housing; Continuous silicone rubber gasket between housing and lens/cover; Energy-efficient, high-powered LED Array Provides 707 delivered lumens, LM79; Excellent heat management for long life Efficacy: 50.9 lumens per watt (LPW); CRI: 86; 4386 CCT Operating temperature: -25°C (-13°F) to 35°C (95°F) Voltage: 120V 50/60Hz; Factory-installed photocontrol; UL Listed for wet locations 5-year warranty Location/Remarks: Fixtures to be located in Building corridors		14 WATTS	120 V	Fixtures to be controlled by photocell	LUMINAIRE: PHILIPS TWILIGHTER LED WALL PAK TWL10LED4KPCB1
L13	(fluorescent, EM)	Description: Back of House surface mounted fixture Lamp: (1)28 watt 2763 lumen 80 CRI 3500K LED module - 29WLED [PHILIPS] Optics/Features: A highly efficient, visually comfortable, architecturally styled recessed LED luminaire designed with a minimalistic strategy to achieve sustainable objectives. Low profile configuration is only 3" high with sloped sides for a sleek appearance. Clean, modern design provides architectural styling compatible with virtually any area. Soft opal diffuser with large luminous area minimizes apparent brightness and provides high visual comfort perfect for a wide variety of general lighting applications like offices, schools, retail, or healthcare. Four lumen packages over a wide range provide significant application flexibility over light levels and/or luminaire spacing. A high lumen package can be used in conjunction with wide luminaire spacing to reduce luminaire quantities and overall cost while maintaining good uniformity. Directs a controlled amount of light to the higher angles in the room to balance the brightness of the surfaces and eliminate "cave effect" while creating the impression of a larger, brighter space without glare. Excellent color rendering with a CRI of 80. LEDs are an excellent source for use with controls since dimming or frequent switching does not degrade the performance or life of the source. External sensors are available for use. Surface mount design requires no plenum space. Some DualED luminaires are DesignLights Consortium® qualified. Please see the DLC QPL list for exact catalog numbers. (www.designlights.org/QPL) 27L and 347V are not DLC qualified. Location/Remarks: Fixtures to be located in mechanical rooms, stairs		28 WATTS	120 V	Fixtures to be controlled by motion sensor	LUMINAIRE: PHILIPS DUAL LED SURFACE DAY-BRITE ISDL27L835-4-D-UNV-DIM 1X4 FT
L14	(fluorescent)	Description: Back of House surface mounted fixture Lamp: (1)28 watt 2763 lumen 80 CRI 3500K LED module - 29WLED [PHILIPS] Optics/Features: A highly efficient, visually comfortable, architecturally styled recessed LED luminaire designed with a minimalistic strategy to achieve sustainable objectives. Low profile configuration is only 3" high with sloped sides for a sleek appearance. Clean, modern design provides architectural styling compatible with virtually any area. Soft opal diffuser with large luminous area minimizes apparent brightness and provides high visual comfort perfect for a wide variety of general lighting applications like offices, schools, retail, or healthcare. Four lumen packages over a wide range provide significant application flexibility over light levels and/or luminaire spacing. A high lumen package can be used in conjunction with wide luminaire spacing to reduce luminaire quantities and overall cost while maintaining good uniformity. Directs a controlled amount of light to the higher angles in the room to balance the brightness of the surfaces and eliminate "cave effect" while creating the impression of a larger, brighter space without glare. Excellent color rendering with a CRI of 80. LEDs are an excellent source for use with controls since dimming or frequent switching does not degrade the performance or life of the source. External sensors are available for use. Surface mount design requires no plenum space. Some DualED luminaires are DesignLights Consortium® qualified. Please see the DLC QPL list for exact catalog numbers. (www.designlights.org/QPL) 27L and 347V are not DLC qualified. Location/Remarks: Fixtures to be located in mechanical rooms, stairs		28 WATTS	120 V	Fixtures to remain energized at all times	LUMINAIRE: PHILIPS DUAL LED SURFACE DAY-BRITE ISDL27L835-4-D-UNV-DIM 1X4 FT
L15	⊢⊕EX	Description: Exterior wall Sconce Lamp: (1)9.6 watt 840 lumen 80 CRI 2700K LED module - EAHP1215WBR [EVERLIGHT] Optics/Features: Folded metal frame inspired by modern architecture. Mounts down only. LM-80 Certified; High Power COB & High CRI LED; Multi-Chip Solution; Dimension:12 mm x 15 mm x 1.6 mm; Main Parameters: Luminous Flux, Forward Voltage , Chromaticity and Color Rendering Index; RoHS compliant; Energy Star / ANSI Compliant Binning Structure; Typical Viewing Angle: 115° Location/Remarks: Fixtures to be located at dwelling unit exterior balconies		9.6 WATTS	120 V	Fixtures to be controlled by photocell	LUMINAIRE: LBL TARA 18 OD743BZLEDW

Narrative A-403.00

Room Number/Type	Control Strategy Recommendation
Corridors/Elevator lobbies	Automatic on/off of 50% of fixtures. 50% of fixtures to remain energized at all times (i.e. emergency fixtures remain on).
Stairs	Astronomical timeclock with occupancy sensor to de-energize 50% of fixtures. 50% of fixtures to remain energized at all times.
Elec./Mechanical Rooms	Astronomical timeclock with occupancy sensor to de-energize 50% of fixtures. 50% of fixtures to remain energized at all times.
Dwelling Units	Local switches to control fixtures in dwelling units (manual off/on). Fixtures to remain energized at all times
Balconies	Local switches to control fixtures in dwelling units (manual off/on). Fixtures to remain energized at all times

R.C.P. LEGEND

Symbol	Description
⊕	CEILING LIGHT-RECESSED
⊕EM	CEILING LIGHT-RECESSED, W/ EMERGENCY BATTERY BACK UP
⊕SH	SHOWER LIGHT-RECESSED, WATER PROOF
⊕P	CEILING LIGHT-PENDANT
⊢⊕	WALL SCONCE
⊢⊕EX	WALL SCONCE (EXTERIOR)
	WALL SCONCE (CORRIDOR)
	UNDERCABINET LED STRIP WORK LIGHT
	FLUORESCENT CEILING LIGHT, SURFACE MOUNTED
EM	FLUORESCENT CEILING LIGHT, SURFACE MOUNTED W/ EMERGENCY BATTERY BACK UP
M	MOTION DETECTOR SENSOR
SM CO	SMOKE/CARBON MONOXIDE DETECTOR, HARD WIRED, WALL MOUNT
IC	INTERCOM, 52" AFF
T	THERMOSTAT
	PHONE / DATA OUTLET
	DUPLEX RECEPTACLE
	FLOOR RECEPTACLE
EX	DUPLEX RECEPTACLE, EXTERIOR
	QUAD RECEPTACLE
	EXIT SIGN W/ EMERGENCY LIGHTS, CEILING MOUNT
	FIRE ALARM SPEAKER
	12" DROP SOFFIT AT KITCHENETTES
	ELECTRIC PANEL
▼ ●	SPRINKLER HEADS

ARCHITECT:
MORALI ARCHITECTURE
505 8th AVENUE, SUITE 2202, NEW YORK, NY, 10018
TEL. 212 219 2091 E-MAIL: MSTUDIONY@AOL.COM

IMA ENGINEERING , PC
123-23 82 AVENUE, KEW GARDENS, NY, 11415 TEL: 718 268 8600

ADVANCED CLEANUP TECHNOLOGIES, INC.
110 MAIN STREET, SUITE 103, PORT WASHINGTON, NY, 11050

COPYRIGHT (C)
THESE PLAN ARE AN INSTRUMENT OF SERVICE AND ARE THE PROPERTY OF THE ARCHITECT.
This and all documents produced by this firm under this agreement shall remain the sole property of this firm and may not be used, copied, changed or distributed by the client or others without the written consent of this firm.
INFRINGEMENTS WILL BE PROSECUTED.

CONTRACTOR SHALL VERIFY ALL CONDITIONS AND MEASUREMENTS IN THE FIELD AND BE RESPONSIBLE FOR FIELD FIT AND QUANTITY OF WORK. NO ALLOWANCES SHALL BE MADE IN BEHALF OF THE CONTRACTOR FOR ANY ERROR OR NEGLECT ON HIS PART.

"THIS PLAN IS APPROVED ONLY FOR WORK INDICATED ON THE APPLICATION SPECIFICATION SHEET. ALL OTHER MATTERS SHOWN ARE NOT TO BE RELIED UPON, OR TO BE CONSIDERED AS EITHER BEING APPROVED OR IN ACCORDANCE WITH APPLICABLE CODES."

No.	Description	Date

PROJECT
36-37 31ST STREET
LONG ISLAND CITY, NY
11106

THIRD FLOOR REFLECTED CEILING PLAN

SCALE : AS NOTED

SEAL: REGISTERED ARCHITECT ANTHONY J. MORALI 017683-1 STATE OF NEW YORK

Date	10.12.15
Project Number	1507
Drawn By	CI
Checked By	AM

A-403.00

FOURTH FLOOR RCP

SCALE: $\frac{3}{16}$" = 1'-0"

Narrative A-404.00

Room Number/Type	Control Strategy Recommendation
Corridors/Elevator lobbies	Automatic on/off of 50% of fixtures. 50% of fixtures to remain energized at all times (i.e. emergency fixtures remain on).
Stairs	Astronomical timeclock with occupancy sensor to de-energize 50% of fixtures. 50% of fixtures to remain energized at all times.
Elec./Mechanical Rooms	Astronomical timeclock with occupancy sensor to de-energize 50% of fixtures. 50% of fixtures to remain energized at all times.
Dwelling Units	Local switches to control fixtures in dwelling units (manual off/on). Fixtures to remain energized at all times
Balconies	Local switches to control fixtures in dwelling units (manual off/on). Fixtures to remain energized at all times

R.C.P. LEGEND

Symbol	Description
⊕	CEILING LIGHT-RECESSED
⊕ EM	CEILING LIGHT-RECESSED, W/ EMERGENCY BATTERY BACK UP
⊕ SH	SHOWER LIGHT-RECESSED, WATER PROOF
⊕ P	CEILING LIGHT-PENDANT
⊢⊕	WALL SCONCE
⊢⊕ EX	WALL SCONCE (EXTERIOR)
	WALL SCONCE (CORRIDOR)
	UNDERCABINET LED STRIP WORK LIGHT
	FLUORESCENT CEILING LIGHT, SURFACE MOUNTED
EM	FLUORESCENT CEILING LIGHT, SURFACE MOUNTED W/ EMERGENCY BATTERY BACK UP
M	MOTION DETECTOR SENSOR
SM CO	SMOKE/CARBON MONOXIDE DETECTOR, HARD WIRED, WALL MOUNT
IC	INTERCOM, 52" AFF
T	THERMOSTAT
	PHONE / DATA OUTLET
	DUPLEX RECEPTACLE
	FLOOR RECEPTACLE
EX	DUPLEX RECEPTACLE, EXTERIOR
	QUAD RECEPTACLE
	EXIT SIGN W/ EMERGENCY LIGHTS, CEILING MOUNT
	FIRE ALARM SPEAKER
	12" DROP SOFFIT AT KITCHENETTES
	ELECTRIC PANEL
▼ ●	SPRINKLER HEADS

LIGHT FIXTURE SCHEDULE

TYPE	SYMBOL	DESCRIPTION	PHOTOMETRY	SYSTEM WATTS	VOLTAGE	CONTROL INTENT	MANUFACTURER
L1	⊕	Description: Recessed LED fixture Lightolier Lytecaster Uniframe 6-3/4" with black baffle Lamp: (1) 433672 - 8A19/SLIM/2700 DIM 6/1 8-40W[450 LMS][2700K](PHILIPS) Optics/Features: Housing: (0.05") thick powder coated aluminum provides integrated thermal management allowing for a low profile at less than 3-1/2" tall. LED board: High efficiency mid-flux LED's. Mixing chamber: 98% reflective, highly diffuse film. Diffusion lens: (0.06") thick opal lens provides an even source of illumination. Retaining ring: (0.04") thick powder coated aluminum,secures module components. Reflector: 30% glass reinforced injection molded poly carbonate is durable and provides a 70° cutoff to the source. Retaining clips: 29 gauge Stainless Steel, allowstool-less installation of light engine to trim. Location/Remarks: Fixtures to be located in dwelling units at dropped ceiling areas		8 WATTS	120 V	Recessed fixtures shall be controlled by: LEVITON DECORA DSM10-1LZ Universal Decora Dimmable LED, Rocker-Slide Dimmer, 450W-120VAC Dimmable LED Single Pole or 3-Way White	LUMINAIRE: LIGHTOLIER - LYTECASTER - 1176LED09N27D1
L2	⊕ EM	Description: Recessed LED fixture Lightolier Lytecaster Uniframe 6-3/4" with black baffle Lamp: (1) 433672 - 8A19/SLIM/2700 DIM 6/1 8-40W[450 LMS][2700K](PHILIPS) Optics/Features: Housing: (0.05") thick powder coated aluminum provides integrated thermal management allowing for a low profile at less than 3-1/2" tall. LED board: High efficiency mid-flux LED's. Mixing chamber: 98% reflective, highly diffuse film. Diffusion lens: (0.06") thick opal lens provides an even source of illumination. Retaining ring: (0.04") thick powder coated aluminum,secures module components. Reflector: 30% glass reinforced injection molded poly carbonate is durable and provides a 70° cutoff to the source. Retaining clips: 29 gauge Stainless Steel, allowstool-less installation of light engine to trim. Location/Remarks: Fixtures to be located in public corridors and Elevator Lobbies		8 WATTS	120 V	Fixtures to remain energized at all times	LUMINAIRE: LIGHTOLIER - LYTECASTER - 1176LED09N27D1
L3	⊕ SH	Description: Recessed LED fixture Lightolier Lytecaster Uniframe 6-3/4" with opal disk for wet location Lamp: (1) 433672 - 8A19/SLIM/2700 DIM 6/1 8-40W[450 LMS][2700K](PHILIPS) Optics/Features: Housing: (0.05") thick powder coated aluminum provides integrated thermal management allowing for a low profile at less than 3-1/2" tall. LED board: High efficiency mid-flux LED's. Mixing chamber: 98% reflective, highly diffuse film. Diffusion lens: (0.06") thick opal lens provides an even source of illumination. Retaining ring: (0.04") thick powder coated aluminum,secures module components. Reflector: 30% glass reinforced injection molded poly carbonate is durable and provides a 70° cutoff to the source. Retaining clips: 29 gauge Stainless Steel, allowstool-less installation of light engine to trim. Location/Remarks: Fixtures to be located in public corridors and Elevator Lobbies		8 WATTS	120 V	Recessed fixtures shall be controlled by: LEVITON DECORA DSM10-1LZ Universal Decora Dimmable LED, Rocker-Slide Dimmer, 450W-120VAC Dimmable LED Single Pole or 3-Way White	LUMINAIRE: LIGHTOLIER - LYTECASTER - 1121LED09N27D1
L4	⊕ P	Description: PS Series Decorative, Vetro LED Pendant (straight) 2.375" Satin AL Lamp: (1) PS01LW40SAU - 7.5W[356 LMS][3000K](PHILIPS) Optics/Features: Power Head: Die cast and extruded aluminum components. Brushed and clear lacquer finish. Primary Diffuser: (SG01L) Triplex hand blown glass or (SA01L) opal acrylic. Outer Glass/Acrylic Assembly: (GLS01) A straight section of clear extruded glass with polished edges, (GLS02) a conical section of clear hand blown glass with polished edges, or (GLS01A) a straight section of clear acrylic. All outer assemblies come with a die cast aluminum holder ring with stainless steel support pins. Optical Mixing Chamber: Remote phosphor technology provides increased efficiency and color stability. Phosphor lens assembly positioned in front of LED array converts blue light to white and produces a wide even pattern of diffused light without bright spots created by individual LEDs. Uniform phosphor coating provides consistent, stable color with a shift of no more than +/-100K over life. Mixing chamber redirects scattered light back out through the emitting aperture. Thermal Management: Heat sink design maintains junction temperature for consistent, reliable performance and 50,000 hour lifetime at 70% lumen maintenance. Location/Remarks: Fixtures to be located in dwelling units at kitchen areas		7.5 WATTS	120 V	Fixtures shall be controlled by: LEVITON DECORA DSM10-1LZ Universal Decora Dimmable LED, Rocker-Slide Dimmer, 450W-120VAC Dimmable LED Single Pole or 3-Way White	LUMINAIRE: PHILIPS PS01LW40SAU Vetro LED PH 2.375" Satin AL
L5	⊕ PL	Description: Pendant light Lamp: (1)SM16-07-10D-830-03 - 8W [475 LMS][3000K][SORAA] Optics/Features: LBL Cypree Pendant Slender modern organic-shaped frosted glass. 8 watt replaceable 500 lumen 80 CRI 3000K LED SORAAÂ® module and 6' of field-cuttable suspension cable Location/Remarks: Fixtures to be located in Entry Lobby		8 WATTS	120 V	Fixtures to remain energized at all times	LUMINAIRE: LBL HS463FRSC-LEDS830MPT
L6	⊕ S	Description: Surface mounted light Lamp: (1) 6.5A19/2200-2700 DM 6/1 - 6.5W [450 LMS][2700K][PHILIPS] Optics/Features: 12.5W A19, 8W A19 and 17W A21 versions available, Smooth dimming to 10% of full light levels, Remote phosphor (yellow) disappears when energized to create even, soft white light, 25,000-hour rated average life+ Instant-on light Location/Remarks: Fixtures to be located in Dwelling unit closets		6.5 WATTS	120 V	Fixtures shall be controlled by: LEVITON DECORA DSM10-1LZ Universal Decora Dimmable LED, Rocker-Slide Dimmer, 450W-120VAC Dimmable LED Single Pole or 3-Way White	LUMINAIRE: KITCHLER 8881WH
L7	⊢⊕	Description: Surface wall Sconce Lamp: (1)10 watt 800 lumen 80 CRI 3000K LED module - EAHP1215WBR [EVERLIGHT] Optics/Features: Hidden within a sleek metal body, an ultra-thin LED light guide panel produces plenty of task illumination ideal for the bath. A thin, forward facing light reveal adds a touch of elegance as the curved endcaps round out the linear nature of the Vertura 24 bathroom lighting fixture from LBL Llghting. Mounts vertically or horizontally. LM-80 Certified; High Power COB & High CRI LED; Multi-Chip Solution; Dimension:12 mm x 15 mm x 1.6 mm; Main Parameters: Luminous Flux, Forward Voltage , Chromaticity and Color Rendering Index; RoHS compliant; Energy Star / ANSI Compliant Binning Structure; Typical Viewing Angle: 115° Location/Remarks: Fixtures to be located in Dwelling unit Bathrooms		10 WATTS	120 V	Fixtures shall be controlled by: LEVITON DECORA DSM10-1LZ Universal Decora Dimmable LED, Rocker-Slide Dimmer, 450W-120VAC Dimmable LED Single Pole or 3-Way White	LUMINAIRE: LBL VERTURA 24 BA867SCLED830 SATIN NICKEL
L8		Description: Surface wall Sconce Lamp: (1)28 watt 2000 lumen 80 CRI 3000K LED module - EAHP1215WBR [EVERLIGHT] Optics/Features: Modern technology meets architectural form in this sophisticated and versatile ceiling light fixture. Riffing on the concept of an elongated 'V', the sleek aluminum body of the Vantra ceiling light from LBL Lighting also serves as the heat sink for the twin LED light guide panels. These visually floating light panels create a unique sense of wonder and offer a choice of outputs including 100% forward or direct/indirect light distribution Ceiling or wall mount. When mounted on the wall, mounts vertically or horizontally. LM-80 Certified; High Power COB & High CRI LED; Multi-Chip Solution; Dimension:12 mm x 15 mm x 1.6 mm; Main Parameters: Luminous Flux, Forward Voltage , Chromaticity and Color Rendering Index; RoHS compliant; Energy Star / ANSI Compliant Binning Structure; Typical Viewing Angle: 115° Location/Remarks: Fixtures to be located in Building corridors		28 WATTS	120 V	Fixtures to remain energized at all times	LUMINAIRE: LBL VANTRA FLUSH MOUNT FM853SCRF-LED830 SATIN NICKEL
L9	⊢⊕ EX	Description: Exterior wall Sconce Lamp: (1)9.6 watt 840 lumen 80 CRI 2700K LED module - EAHP1215WBR [EVERLIGHT] Optics/Features: Folded metal frame inspired by modern architecture. Mounts down only. LM-80 Certified; High Power COB & High CRI LED; Multi-Chip Solution; Dimension:12 mm x 15 mm x 1.6 mm; Main Parameters: Luminous Flux, Forward Voltage , Chromaticity and Color Rendering Index; RoHS compliant; Energy Star / ANSI Compliant Binning Structure; Typical Viewing Angle: 115° Location/Remarks: Fixtures to be located at dwelling unit exterior balconies		9.6 WATTS	120 V	Fixtures shall be controlled by: LEVITON DECORA DSM10-1LZ Universal Decora Dimmable LED, Rocker-Slide Dimmer, 450W-120VAC Dimmable LED Single Pole or 3-Way White	LUMINAIRE: LBL TARA 18 OD743BZLEDW
L10		Description: Undercounter strip light Lamp: (1)10 watt 479 lumen 80 CRI 4000K LED module - 910503702218 [PHILIPS] Optics/Features: Housing Extruded aluminium, polycarbonate. White, Black, or Gray powder-coated finish. ; Lens: Polycarbonate; Fixture Connections Integral male / female connectors Temperature Ranges -4° – 122° F (-20° – 50° C) Operating -4° – 122° F (-20° – 50° C) Startup -40° – 176° F (-40° – 80° C) Storage Humidity 0 – 95%, non-condensing; Fixture Run Length Up to 50 ft (15.3 m) of fixtures in a single run, ≤ 324 W; Certification and SafetyCertification UL / cUL, F CC Class B, CE, C-Tick, ENERGY STAR (120 VAC); Environment Dry / Damp Location, IP50 Location/Remarks: Fixtures to be located under kitchen cabinetry		10 WATTS	120 V	Fixtures shall be controlled by: LEVITON DECORA DSM10-1LZ Universal Decora Dimmable LED, Rocker-Slide Dimmer, 450W-120VAC Dimmable LED Single Pole or 3-Way White	LUMINAIRE: PHILIPS eW PROFILE POWERCORE 4000K, 19.25 IN. 523-00002646
L11	⊕	Description: Common corridor pendant Lamp: (1)20 watt 1420 lumen 80 CRI 2700K LED module - 80-905 [KOLOURONE-SATCO] Optics/Features: 1-Light Flush Mounted Dome LED Ceiling Light in Polished Nickel Finish and Frosted GlassMotivation WITH 19.5W 120V 2700K 110 Degree Beam 30,000 Hour Circular LED Dimmable Light Engine - Self-contained simple plug and play design - Integrated power supply - No external driver, heat sink or drivers - Easily replaceable - Sleek, space-saving design - RU damp located listed Location/Remarks: Fixtures to be located in Building corridors		20 WATTS	120 V	Fixtures to remain energized at all times	LUMINAIRE: NUVO 62-302
L12	⊢⊕ WP	Description: Common corridor pendant Lamp: (1)14 watt 710 lumen 80 CRI 4000K LED module - TLW10LED4KPCB-1 [PHILIPS] Optics/Features: 13.9 watt high-powered LED array; 50,000 hour life; Lightweight, compact design Sturdy die-cast aluminum housing; Architectural bronze UV resistant powder coat finish; UV stabilized polycarbonate lens/refractor UV stabilized polycarbonate front housing; Continuous silicone rubber gasket between housing and lens/cover; Energy-efficient, high-powered LED Array Provides 707 delivered lumens, LM79; Excellent heat management for long life Efficacy: 50.9 lumens per watt (LPW); CRI: 86; 4386 CCT Operating temperature: -25°C (-13°F) to 35°C (95°F) Voltage: 120V 50/60Hz; Factory-installed photocontrol; UL Listed for wet locations 5-year warranty Location/Remarks: Fixtures to be located in Building corridors		14 WATTS	120 V	Fixtures to be controlled by photocell	LUMINAIRE: PHILIPS TWILIGHTER LED WALL PAK TWL10LED4KPCB1
L13	EM	Description: Back of House surface mounted fixture Lamp: (1)28 watt 2763 lumen 80 CRI 3500K LED module - 29WLED [PHILIPS] Optics/Features: A highly efficient, visually comfortable, architecturally styled recessed LED luminaire designed with a minimalistic strategy to achieve sustainable objectives. Low profile configuration is only 3" high with sloped sides for a sleek appearance. Clean, modern design provides architectural styling compatible with virtually any area. Soft opal diffuser with large luminous area minimizes apparent brightness and provides high visual comfort perfect for a wide variety of general lighting applications like offices, schools, retail, or healthcare. Four lumen packages over a wide range provide significant application flexibility over light levels and/or luminaire spacing. A high lumen package can be used in conjunction with wide luminaire spacing to reduce luminaire quantities and cost while maintaining good uniformity. Directs a controlled amount of light to the higher angles in the room to balance the brightness of the surfaces and eliminate "cave effect" while creating the impression of a larger, brighter space without glare. Excellent color rendering with a CRI of 80. LEDs are an excellent source for use with controls since dimming or frequent switching does not degrade the performance or life of the source. External sensors are available for use. Surface mount design requires no plenum space. Some DuaLED luminaires are DesignLights Consortium® qualified. Please see the DLC QPL list for exact catalog numbers. (www.designlights.org/QPL) 27L and 347V are not DLC qualified. Location/Remarks: Fixtures to be located in mechanical rooms, stairs		28 WATTS	120 V	Fixtures to be controlled by motion sensor	LUMINAIRE: PHILIPS DUAL LED SURFACE DAY-BRITE ISDL27L835-4-D-UNV-DIM 1X4 FT
L14		Description: Back of House surface mounted fixture Lamp: (1)28 watt 2763 lumen 80 CRI 3500K LED module - 29WLED [PHILIPS] Optics/Features: A highly efficient, visually comfortable, architecturally styled recessed LED luminaire designed with a minimalistic strategy to achieve sustainable objectives. Low profile configuration is only 3" high with sloped sides for a sleek appearance. Clean, modern design provides architectural styling compatible with virtually any area. Soft opal diffuser with large luminous area minimizes apparent brightness and provides high visual comfort perfect for a wide variety of general lighting applications like offices, schools, retail, or healthcare. Four lumen packages over a wide range provide significant application flexibility over light levels and/or luminaire spacing. A high lumen package can be used in conjunction with wide luminaire spacing to reduce luminaire quantities and cost while maintaining good uniformity. Directs a controlled amount of light to the higher angles in the room to balance the brightness of the surfaces and eliminate "cave effect" while creating the impression of a larger, brighter space without glare. Excellent color rendering with a CRI of 80. LEDs are an excellent source for use with controls since dimming or frequent switching does not degrade the performance or life of the source. External sensors are available for use. Surface mount design requires no plenum space. Some DuaLED luminaires are DesignLights Consortium® qualified. Please see the DLC QPL list for exact catalog numbers. (www.designlights.org/QPL) 27L and 347V are not DLC qualified. Location/Remarks: Fixtures to be located in mechanical rooms, stairs		28 WATTS	120 V	Fixtures to remain energized at all times	LUMINAIRE: PHILIPS DUAL LED SURFACE DAY-BRITE ISDL27L835-4-D-UNV-DIM 1X4 FT
L15	⊢⊕ EX	Description: Exterior wall Sconce Lamp: (1)9.6 watt 840 lumen 80 CRI 2700K LED module - EAHP1215WBR [EVERLIGHT] Optics/Features: Folded metal frame inspired by modern architecture. Mounts down only. LM-80 Certified; High Power COB & High CRI LED; Multi-Chip Solution; Dimension:12 mm x 15 mm x 1.6 mm; Main Parameters: Luminous Flux, Forward Voltage , Chromaticity and Color Rendering Index; RoHS compliant; Energy Star / ANSI Compliant Binning Structure; Typical Viewing Angle: 115° Location/Remarks: Fixtures to be located at dwelling unit exterior balconies		9.6 WATTS	120 V	Fixtures to be controlled by photocell	LUMINAIRE: LBL TARA 18 OD743BZLEDW

ARCHITECT:
MORALI ARCHITECTURE
505 8th AVENUE, SUITE 2202, NEW YORK, NY, 10018
TEL. 212 219 2091 E-MAIL: MSTUDIONY@AOL.COM

IMA ENGINEERING , PC
123-23 82 AVENUE, KEW GARDENS, NY, 11415 TEL: 718 268 8600

ADVANCED CLEANUP TECHNOLOGIES, INC.
110 MAIN STREET, SUITE 103, PORT WASHINGTON, NY, 11050

COPYRIGHT (C)
THESE PLAN ARE AN INSTRUMENT OF SERVICE AND ARE THE PROPERTY OF THE ARCHITECT.
This and all documents produced by this firm under this agreement shall remain the sole property of this firm and may not be used, copied, changed or distributed by the client or others without the written consent of this firm.
INFRINGEMENTS WILL BE PROSECUTED.

CONTRACTOR SHALL VERIFY ALL CONDITIONS AND MEASUREMENTS IN THE FIELD AND BE RESPONSIBLE FOR FIELD FIT AND QUANTITY OF WORK. NO ALLOWANCES SHALL BE MADE IN BEHALF OF THE CONTRACTOR FOR ANY ERROR OR NEGLECT ON HIS PART.

"THIS PLAN IS APPROVED ONLY FOR WORK INDICATED ON THE APPLICATION SPECIFICATION SHEET. ALL OTHER MATTERS SHOWN ARE NOT TO BE RELIED UPON, OR TO BE CONSIDERED AS EITHER BEING APPROVED OR IN ACCORDANCE WITH APPLICABLE CODES."

No.	Description	Date

PROJECT
36-37 31ST STREET
LONG ISLAND CITY, NY
11106

FOURTH FLOOR REFLECTED CEILING PLAN

SCALE : AS NOTED

SEAL: REGISTERED ARCHITECT ANTHONY J. MORALI 017683-1 STATE OF NEW YORK

Date	10.12.15
Project Number	1507
Drawn By	CI
Checked By	AM

A-404.00

FIFTH FLOOR RCP

SCALE: $\frac{3}{16}$" = 1'-0"

LIGHT FIXTURE SCHEDULE

TYPE	SYMBOL	DESCRIPTION	PHOTOMETRY	SYSTEM WATTS	VOLTAGE	CONTROL INTENT	MANUFACTURER
L1		Description: Recessed LED fixture Lightolier Lytecaster Uniframe 6-3/4" with black baffle Lamp: (1) 433672 - 8A19/SLIM/2700 DIM 6/1 8-40W[450 LMS][2700K](PHILIPS) Optics/Features: Housing: (0.05") thick powder coated aluminum provides integrated thermal management allowing for a low profile at less than 3-1/2" tall. LED board: High efficiency mid-flux LED's. Mixing chamber: 98% reflective, highly diffuse film. Diffusion lens: (0.06") thick opal lens provides an even source of illumination. Retaining ring: (0.04") thick powder coated aluminum,secures module components. Reflector: 30% glass reinforced injection molded poly carbonate is durable and provides a 70° cutoff to the source. Retaining clips: 29 gauge Stainless Steel, allowstool-less installation of light engine to trim. Location/Remarks: Fixtures to be located in dwelling units at dropped ceiling areas		8 WATTS	120 V	Recessed fixtures shall be controlled by: LEVITON DECORA DSM10-1LZ Universal Decora Dimmable LED, Rocker-Slide Dimmer, 450W-120VAC Dimmable LED Single Pole or 3-Way White	LUMINAIRE: LIGHTOLIER - LYTECASTER - 1176LED09N27D1
L2		Description: Recessed LED fixture Lightolier Lytecaster Uniframe 6-3/4" with black baffle Lamp: (1) 433672 - 8A19/SLIM/2700 DIM 6/1 8-40W[450 LMS][2700K](PHILIPS) Optics/Features: Housing: (0.05") thick powder coated aluminum provides integrated thermal management allowing for a low profile at less than 3-1/2" tall. LED board: High efficiency mid-flux LED's. Mixing chamber: 98% reflective, highly diffuse film. Diffusion lens: (0.06") thick opal lens provides an even source of illumination. Retaining ring: (0.04") thick powder coated aluminum,secures module components. Reflector: 30% glass reinforced injection molded poly carbonate is durable and provides a 70° cutoff to the source. Retaining clips: 29 gauge Stainless Steel, allowstool-less installation of light engine to trim. Location/Remarks: Fixtures to be located in public corridors and Elevator Lobbies		8 WATTS	120 V	Fixtures to remain energized at all times	LUMINAIRE: LIGHTOLIER - LYTECASTER - 1176LED09N27D1
L3		Description: Recessed LED fixture Lightolier Lytecaster Uniframe 6-3/4" with opal disk for wet location Lamp: (1) 433672 - 8A19/SLIM/2700 DIM 6/1 8-40W[450 LMS][2700K](PHILIPS) Optics/Features: Housing: (0.05") thick powder coated aluminum provides integrated thermal management allowing for a low profile at less than 3-1/2" tall. LED board: High efficiency mid-flux LED's. Mixing chamber: 98% reflective, highly diffuse film. Diffusion lens: (0.06") thick opal lens provides an even source of illumination. Retaining ring: (0.04") thick powder coated aluminum,secures module components. Reflector: 30% glass reinforced injection molded poly carbonate is durable and provides a 70° cutoff to the source. Retaining clips: 29 gauge Stainless Steel, allowstool-less installation of light engine to trim. Location/Remarks: Fixtures to be located in public corridors and Elevator Lobbies		8 WATTS	120 V	Recessed fixtures shall be controlled by: LEVITON DECORA DSM10-1LZ Universal Decora Dimmable LED, Rocker-Slide Dimmer, 450W-120VAC Dimmable LED Single Pole or 3-Way White	LUMINAIRE: LIGHTOLIER - LYTECASTER - 1121LED09N27D1
L4		Description: PS Series Decorative, Vetro LED Pendant (straight) 2.375" Satin AL Lamp: (1) PS01LW40SAU - 7.5W[356 LMS][3000K](PHILIPS) Optics/Features: Power Head: Die cast and extruded aluminum components. Brushed and clear lacquer finish. Primary Diffuser: (SG01L) Triplex hand blown glass or (SA01L) opal acrylic. Outer Glass/Acrylic Assembly: (GLS01) A straight section of clear extruded glass with polished edges, (GLS02) a conical section of clear hand blown glass with polished edges, or (GLS01A) a straight section of clear acrylic. All outer assemblies come with a die cast aluminum holder ring with stainless steel support pins. Optical Mixing Chamber: Remote phosphor technology provides increased efficiency and color stability. Phosphor lens assembly positioned in front of LED array converts blue light to white and produces a wide even pattern of diffused light without bright spots created by individual LEDs. Uniform phosphor coating provides consistent, stable color with a shift of no more than +/-100K over life. Mixing chamber redirects scattered light back out through the emitting aperture. Thermal Management: Heat sink design maintains junction temperature for consistent, reliable performance and 50,000 hour lifetime at 70% lumen maintenance. Location/Remarks: Fixtures to be located in dwelling units at kitchen areas		7.5 WATTS	120 V	Fixtures shall be controlled by: LEVITON DECORA DSM10-1LZ Universal Decora Dimmable LED, Rocker-Slide Dimmer, 450W-120VAC Dimmable LED Single Pole or 3-Way White	LUMINAIRE: PHILIPS PS01LW40SAU Vetro LED PH 2.375" Satin AL
L5		Description: Pendant light Lamp: (1)SM16-07-10D-830-03 - 8W [475 LMS][3000K][SORAA] Optics/Features: LBL Cypree Pendant Slender modern organic-shaped frosted glass. 8 watt replaceable 500 lumen 80 CRI 3000K LED SORAAÂ® module and 6' of field-cuttable suspension cable Location/Remarks: Fixtures to be located in Entry Lobby		8 WATTS	120 V	Fixtures to remain energized at all times	LUMINAIRE: LBL HS463FRSC-LEDS830MPT
L6		Description: Surface mounted light Lamp: (1) 6.5A19/2200-2700 DM 6/1 - 6.5W [450 LMS][2700K][PHILIPS] Optics/Features: 12.5W A19, 8W A19 and 17W A21 versions available, Smooth dimming to 10% of full light levels, Remote phosphor (yellow) disappears when energized to create even, soft white light, 25,000-hour rated average life+ Instant-on light Location/Remarks: Fixtures to be located in Dwelling unit closets		6.5 WATTS	120 V	Fixtures shall be controlled by: LEVITON DECORA DSM10-1LZ Universal Decora Dimmable LED, Rocker-Slide Dimmer, 450W-120VAC Dimmable LED Single Pole or 3-Way White	LUMINAIRE: KITCHLER 8881WH
L7		Description: Surface wall Sconce Lamp: (1)10 watt 800 lumen 80 CRI 3000K LED module - EAHP1215WBR [EVERLIGHT] Optics/Features: Hidden within a sleek metal body, an ultra-thin LED light guide panel produces plenty of task illumination ideal for the bath. A thin, forward facing light reveal adds a touch of elegance as the curved endcaps round out the linear nature of the Vertura 24 bathroom lighting fixture from LBL Lighting. Mounts vertically or horizontally. LM-80 Certified; High Power COB & High CRI LED; Multi-Chip Solution; Dimension:12 mm x 15 mm x 1.6 mm; Main Parameters: Luminous Flux, Forward Voltage , Chromaticity and Color Rendering Index; RoHS compliant; Energy Star / ANSI Compliant Binning Structure; Typical Viewing Angle: 115° Location/Remarks: Fixtures to be located in Dwelling unit Bathrooms		10 WATTS	120 V	Fixtures shall be controlled by: LEVITON DECORA DSM10-1LZ Universal Decora Dimmable LED, Rocker-Slide Dimmer, 450W-120VAC Dimmable LED Single Pole or 3-Way White	LUMINAIRE: LBL VERTURA 24 BA867SCLED830 SATIN NICKEL
L8		Description: Surface wall Sconce Lamp: (1)28 watt 2000 lumen 80 CRI 3000K LED module - EAHP1215WBR [EVERLIGHT] Optics/Features: Modern technology meets architectural form in this sophisticated and versatile ceiling light fixture. Riffing on the concept of an elongated 'V', the sleek aluminum body of the Vantra ceiling light from LBL Lighting also serves as the heat sink for the twin LED light guide panels. These visually floating light panels create a unique sense of wonder and offer a choice of outputs including 100% forward or direct/indirect light distribution Ceiling or wall mount. When mounted on the wall, mounts vertically or horizontally. LM-80 Certified; High Power COB & High CRI LED; Multi-Chip Solution; Dimension:12 mm x 15 mm x 1.6 mm; Main Parameters: Luminous Flux, Forward Voltage , Chromaticity and Color Rendering Index; RoHS compliant; Energy Star / ANSI Compliant Binning Structure; Typical Viewing Angle: 115° Location/Remarks: Fixtures to be located in Building corridors		28 WATTS	120 V	Fixtures to remain energized at all times	LUMINAIRE: LBL VANTRA FLUSH MOUNT FM853SCRF-LED830 SATIN NICKEL
L9		Description: Exterior wall Sconce Lamp: (1)9.6 watt 840 lumen 80 CRI 2700K LED module - EAHP1215WBR [EVERLIGHT] Optics/Features: Folded metal frame inspired by modern architecture. Mounts down only. LM-80 Certified; High Power COB & High CRI LED; Multi-Chip Solution; Dimension:12 mm x 15 mm x 1.6 mm; Main Parameters: Luminous Flux, Forward Voltage , Chromaticity and Color Rendering Index; RoHS compliant; Energy Star / ANSI Compliant Binning Structure; Typical Viewing Angle: 115° Location/Remarks: Fixtures to be located at dwelling unit exterior balconies		9.6 WATTS	120 V	Fixtures shall be controlled by: LEVITON DECORA DSM10-1LZ Universal Decora Dimmable LED, Rocker-Slide Dimmer, 450W-120VAC Dimmable LED Single Pole or 3-Way White	LUMINAIRE: LBL TARA 18 OD743BZLEDW
L10		Description: Undercounter strip light Lamp: (1)10 watt 479 lumen 80 CRI 4000K LED module - 910503702218 [PHILIPS] Optics/Features: Housing Extruded aluminium, polycarbonate. White, Black, or Gray powder-coated finish. ; Lens: Polycarbonate; Fixture Connections Integral male / female connectors Temperature Ranges -4° – 122° F (-20° – 50° C) Operating -4° – 122° F (-20° – 50° C) Startup -40° – 176° F (-40° – 80° C) Storage Humidity 0 – 95%, non-condensing; Fixture Run Length Up to 50 ft (15.3 m) of fixtures in a single run, ≤ 324 W; Certification and SafetyCertification UL / cUL, F CC Class B, CE, C-Tick, ENERGY STAR (120 VAC); Environment Dry / Damp Location, IP50 Location/Remarks: Fixtures to be located under kitchen cabinetry		10 WATTS	120 V	Fixtures shall be controlled by: LEVITON DECORA DSM10-1LZ Universal Decora Dimmable LED, Rocker-Slide Dimmer, 450W-120VAC Dimmable LED Single Pole or 3-Way White	LUMINAIRE: PHILIPS eW PROFILE POWERCORE 4000K, 19.25 IN. 523-00002646
L11		Description: Common corridor pendant Lamp: (1)20 watt 1420 lumen 80 CRI 2700K LED module - 80-905 [KOLOURONE-SATCO] Optics/Features: 1-Light Flush Mounted Dome LED Ceiling Light in Polished Nickel Finish and Frosted GlassMotivation WITH 19.5W 120V 2700K 110 Degree Beam 30,000 Hour Circular LED Dimmable Light Engine - Self-contained simple plug and play design - Integrated power supply - No external driver, heat sink or drivers - Easily replaceable - Sleek, space-saving design - RU damp located listed Location/Remarks: Fixtures to be located in Building corridors		20 WATTS	120 V	Fixtures to remain energized at all times	LUMINAIRE: NUVO 62-302
L12		Description: Common corridor pendant Lamp: (1)14 watt 710 lumen 80 CRI 4000K LED module - TLW10LED4KPCB-1 [PHILIPS] Optics/Features: 13.9 watt high-powered LED array; 50,000 hour life; Lightweight, compact design Sturdy die-cast aluminum housing; Architectural bronze UV resistant powder coat finish; UV stabilized polycarbonate lens/refractor UV stabilized polycarbonate front housing; Continuous silicone rubber gasket between housing and lens/cover; Energy-efficient, high-powered LED Array Provides 707 delivered lumens, LM79; Excellent heat management for long life Efficacy: 50.9 lumens per watt (LPW); CRI: 86; 4386 CCT Operating temperature: -25°C (-13°F) to 35°C (95°F) Voltage: 120V 50/60Hz; Factory-installed photocontrol; UL Listed for wet locations 5-year warranty Location/Remarks: Fixtures to be located in Building corridors		14 WATTS	120 V	Fixtures to be controlled by photocell	LUMINAIRE: PHILIPS TWILIGHTER LED WALL PAK TWL10LED4KPCB1
L13		Description: Back of House surface mounted fixture Lamp: (1)28 watt 2763 lumen 80 CRI 3500K LED module - 29WLED [PHILIPS] Optics/Features: A highly efficient, visually comfortable, architecturally styled recessed LED luminaire designed with a minimalistic strategy to achieve sustainable objectives. Low profile configuration is only 3" high with sloped sides for a sleek appearance. Clean, modern design provides architectural styling compatible with virtually any area. Soft opal diffuser with large luminous area minimizes apparent brightness and provides high visual comfort perfect for a wide variety of general lighting applications like offices, schools, retail, or healthcare. Four lumen packages over a wide range provide significant application flexibility over light levels and/or luminaire spacing. A high lumen package can be used in conjunction with wide luminaire spacing to reduce luminaire quantities and overall cost while maintaining good uniformity. Directs a controlled amount of light to the higher angles in the room to balance the brightness of the surfaces and eliminate "cave effect" while creating the impression of a larger, brighter space without glare. Excellent color rendering with a CRI of 80. LEDs are an excellent source for use with controls since dimming or frequent switching does not degrade the performance or life of the source. External sensors are available for use. Surface mount design requires no plenum space. Some DuaLED luminaires are DesignLights Consortium® qualified. Please see the DLC QPL list for exact catalog numbers. (www.designlights.org/QPL) 27L and 347V are not DLC qualified. Location/Remarks: Fixtures to be located in mechanical rooms, stairs		28 WATTS	120 V	Fixtures to be controlled by motion sensor	LUMINAIRE: PHILIPS DUAL LED SURFACE DAY-BRITE ISDL27L835-4-D-UNV-DIM 1X4 FT
L14		Description: Back of House surface mounted fixture Lamp: (1)28 watt 2763 lumen 80 CRI 3500K LED module - 29WLED [PHILIPS] Optics/Features: A highly efficient, visually comfortable, architecturally styled recessed LED luminaire designed with a minimalistic strategy to achieve sustainable objectives. Low profile configuration is only 3" high with sloped sides for a sleek appearance. Clean, modern design provides architectural styling compatible with virtually any area. Soft opal diffuser with large luminous area minimizes apparent brightness and provides high visual comfort perfect for a wide variety of general lighting applications like offices, schools, retail, or healthcare. Four lumen packages over a wide range provide significant application flexibility over light levels and/or luminaire spacing. A high lumen package can be used in conjunction with wide luminaire spacing to reduce luminaire quantities and overall cost while maintaining good uniformity. Directs a controlled amount of light to the higher angles in the room to balance the brightness of the surfaces and eliminate "cave effect" while creating the impression of a larger, brighter space without glare. Excellent color rendering with a CRI of 80. LEDs are an excellent source for use with controls since dimming or frequent switching does not degrade the performance or life of the source. External sensors are available for use. Surface mount design requires no plenum space. Some DuaLED luminaires are DesignLights Consortium® qualified. Please see the DLC QPL list for exact catalog numbers. (www.designlights.org/QPL) 27L and 347V are not DLC qualified. Location/Remarks: Fixtures to be located in mechanical rooms, stairs		28 WATTS	120 V	Fixtures to remain energized at all times	LUMINAIRE: PHILIPS DUAL LED SURFACE DAY-BRITE ISDL27L835-4-D-UNV-DIM 1X4 FT
L15		Description: Exterior wall Sconce Lamp: (1)9.6 watt 840 lumen 80 CRI 2700K LED module - EAHP1215WBR [EVERLIGHT] Optics/Features: Folded metal frame inspired by modern architecture. Mounts down only. LM-80 Certified; High Power COB & High CRI LED; Multi-Chip Solution; Dimension:12 mm x 15 mm x 1.6 mm; Main Parameters: Luminous Flux, Forward Voltage , Chromaticity and Color Rendering Index; RoHS compliant; Energy Star / ANSI Compliant Binning Structure; Typical Viewing Angle: 115° Location/Remarks: Fixtures to be located at dwelling unit exterior balconies		9.6 WATTS	120 V	Fixtures to be controlled by photocell	LUMINAIRE: LBL TARA 18 OD743BZLEDW

Narrative A-405.00

Room Number/Type	Control Strategy Recommendation
Corridors/Elevator lobbies	Automatic on/off of 50% of fixtures. 50% of fixtures to remain energized at all times (i.e. emergency fixtures remain on).
Stairs	Astronomical timeclock with occupancy sensor to de-energize 50% of fixtures. 50% of fixtures to remain energized at all times.
Elec./Mechanical Rooms	Astronomical timeclock with occupancy sensor to de-energize 50% of fixtures. 50% of fixtures to remain energized at all times.
Dwelling Units	Local switches to control fixtures in dwelling units (manual off/on). Fixtures to remain energized at all times
Balconies	Local switches to control fixtures in dwelling units (manual off/on). Fixtures to remain energized at all times

R.C.P. LEGEND

	CEILING LIGHT-RECESSED
EM	CEILING LIGHT-RECESSED, W/ EMERGENCY BATTERY BACK UP
SH	SHOWER LIGHT-RECESSED, WATER PROOF
P	CEILING LIGHT-PENDANT
	WALL SCONCE
EX	WALL SCONCE (EXTERIOR)
	WALL SCONCE (CORRIDOR)
	UNDERCABINET LED STRIP WORK LIGHT
	FLUORESCENT CEILING LIGHT, SURFACE MOUNTED
EM	FLUORESCENT CEILING LIGHT, SURFACE MOUNTED W/ EMERGENCY BATTERY BACK UP
M	MOTION DETECTOR SENSOR
SM CO	SMOKE/CARBON MONOXIDE DETECTOR, HARD WIRED, WALL MOUNT
IC	INTERCOM, 52" AFF
T	THERMOSTAT
	PHONE / DATA OUTLET
	DUPLEX RECEPTACLE
	FLOOR RECEPTACLE
EX	DUPLEX RECEPTACLE, EXTERIOR
	QUAD RECEPTACLE
	EXIT SIGN W/ EMERGENCY LIGHTS, CEILING MOUNT
	FIRE ALARM SPEAKER
	12" DROP SOFFIT AT KITCHENETTES
	ELECTRIC PANEL
▼ ●	SPRINKLER HEADS

ARCHITECT:

MORALI ARCHITECTURE

505 8th AVENUE, SUITE 2202, NEW YORK, NY, 10018

TEL. 212 219 2091 E-MAIL: MSTUDIONY@AOL.COM

IMA ENGINEERING , PC

123-23 82 AVENUE, KEW GARDENS, NY, 11415 TEL: 718 268 8600

ADVANCED CLEANUP TECHNOLOGIES, INC.

110 MAIN STREET, SUITE 103, PORT WASHINGTON, NY, 11050

COPYRIGHT (C)
THESE PLAN ARE AN INSTRUMENT OF SERVICE AND ARE THE PROPERTY OF THE ARCHITECT.
This and all documents produced by this firm under this agreement shall remain the sole property of this firm and may not be used, copied, changed or distributed by the client or others without the written consent of this firm.
INFRINGEMENTS WILL BE PROSECUTED.

CONTRACTOR SHALL VERIFY ALL CONDITIONS AND MEASUREMENTS IN THE FIELD AND BE RESPONSIBLE FOR FIELD FIT AND QUANTITY OF WORK. NO ALLOWANCES SHALL BE MADE IN BEHALF OF THE CONTRACTOR FOR ANY ERROR OR NEGLECT ON HIS PART.

"THIS PLAN IS APPROVED ONLY FOR WORK INDICATED ON THE APPLICATION SPECIFICATION SHEET. ALL OTHER MATTERS SHOWN ARE NOT TO BE RELIED UPON, OR TO BE CONSIDERED AS EITHER BEING APPROVED OR IN ACCORDANCE WITH APPLICABLE CODES."

No.	Description	Date

PROJECT

36-37 31ST STREET
LONG ISLAND CITY, NY
11106

FIFTH FLOOR REFLECTED CEILING PLAN

SCALE : AS NOTED

SEAL: REGISTERED ARCHITECT ANTHONY J. MORALI 017683-1 STATE OF NEW YORK

Date	10.12.15
Project Number	1507
Drawn By	CI
Checked By	AM

A-405.00

SIXTH FLOOR RCP
SCALE: $\frac{3}{16}$" = 1'-0"

LIGHT FIXTURE SCHEDULE

TYPE	SYMBOL	DESCRIPTION	PHOTOMETRY	SYSTEM WATTS	VOLTAGE	CONTROL INTENT	MANUFACTURER
L1	⊕	Description: Recessed LED fixture Lightolier Lytecaster Uniframe 6-3/4" with black baffle Lamp: (1) 433672 - 8A19/SLIM/2700 DIM 6/1 8-40W[450 LMS][2700K](PHILIPS) Optics/Features: Housing: (0.05") thick powder coated aluminum provides integrated thermal management allowing for a low profile at less than 3-1/2" tall. LED board: High efficiency mid-flux LED's. Mixing chamber: 98% reflective, highly diffuse film. Diffusion lens: (0.06") thick opal lens provides an even source of illumination. Retaining ring: (0.04") thick powder coated aluminum,secures module components. Reflector: 30% glass reinforced injection molded poly carbonate is durable and provides a 70° cutoff to the source. Retaining clips: 29 gauge Stainless Steel, allowstool-less installation of light engine to trim. Location/Remarks: Fixtures to be located in dwelling units at dropped ceiling areas		8 WATTS	120 V	Recessed fixtures shall be controlled by: LEVITON DECORA DSM10-1LZ Universal Decora Dimmable LED, Rocker-Slide Dimmer, 450W-120VAC Dimmable LED Single Pole or 3-Way White	LUMINAIRE: LIGHTOLIER - LYTECASTER - 1176LED09N27D1
L2	⊕EM	Description: Recessed LED fixture Lightolier Lytecaster Uniframe 6-3/4" with black baffle Lamp: (1) 433672 - 8A19/SLIM/2700 DIM 6/1 8-40W[450 LMS][2700K](PHILIPS) Optics/Features: Housing: (0.05") thick powder coated aluminum provides integrated thermal management allowing for a low profile at less than 3-1/2" tall. LED board: High efficiency mid-flux LED's. Mixing chamber: 98% reflective, highly diffuse film. Diffusion lens: (0.06") thick opal lens provides an even source of illumination. Retaining ring: (0.04") thick powder coated aluminum,secures module components. Reflector: 30% glass reinforced injection molded poly carbonate is durable and provides a 70° cutoff to the source. Retaining clips: 29 gauge Stainless Steel, allowstool-less installation of light engine to trim. Location/Remarks: Fixtures to be located in public corridors and Elevator Lobbies		8 WATTS	120 V	Fixtures to remain energized at all times	LUMINAIRE: LIGHTOLIER - LYTECASTER - 1176LED09N27D1
L3	⊕SH	Description: Recessed LED fixture Lightolier Lytecaster Uniframe 6-3/4" with opal disk for wet location Lamp: (1) 433672 - 8A19/SLIM/2700 DIM 6/1 8-40W[450 LMS][2700K](PHILIPS) Optics/Features: Housing: (0.05") thick powder coated aluminum provides integrated thermal management allowing for a low profile at less than 3-1/2" tall. LED board: High efficiency mid-flux LED's. Mixing chamber: 98% reflective, highly diffuse film. Diffusion lens: (0.06") thick opal lens provides an even source of illumination. Retaining ring: (0.04") thick powder coated aluminum,secures module components. Reflector: 30% glass reinforced injection molded poly carbonate is durable and provides a 70° cutoff to the source. Retaining clips: 29 gauge Stainless Steel, allowstool-less installation of light engine to trim. Location/Remarks: Fixtures to be located in public corridors and Elevator Lobbies		8 WATTS	120 V	Recessed fixtures shall be controlled by: LEVITON DECORA DSM10-1LZ Universal Decora Dimmable LED, Rocker-Slide Dimmer, 450W-120VAC Dimmable LED Single Pole or 3-Way White	LUMINAIRE: LIGHTOLIER - LYTECASTER - 1121LED09N27D1
L4	⊕P	Description: PS Series Decorative, Vetro LED Pendant (straight) 2.375" Satin AL Lamp: (1) PS01LW40SAU - 7.5W[356 LMS][3000K](PHILIPS) Optics/Features: Power Head: Die cast and extruded aluminum components. Brushed and clear lacquer finish. Primary Diffuser: (SG01L) Triplex hand blown glass or (SA01L) opal acrylic. Outer Glass/Acrylic Assembly: (GLS01) A straight section of clear extruded glass with polished edges, (GLS02) a conical section of clear hand blown glass with polished edges, or (GLS01A) a straight section of clear acrylic. All outer assemblies come with a die cast aluminum holder ring with stainless steel support pins. Optical Mixing Chamber: Remote phosphor technology provides increased efficiency and color stability. Phosphor lens assembly positioned in front of LED array converts blue light to white and produces a wide even pattern of diffused light without bright spots created by individual LEDs. Uniform phosphor coating provides consistent, stable color with a shift of no more than +/-100K over life. Mixing chamber redirects scattered light back out through the emitting aperture. Thermal Management: Heat sink design maintains junction temperature for consistent, reliable performance and 50,000 hour lifetime at 70% lumen maintenance. Location/Remarks: Fixtures to be located in dwelling units at kitchen areas		7.5 WATTS	120 V	Fixtures shall be controlled by: LEVITON DECORA DSM10-1LZ Universal Decora Dimmable LED, Rocker-Slide Dimmer, 450W-120VAC Dimmable LED Single Pole or 3-Way White	LUMINAIRE: PHILIPS PS01LW40SAU Vetro LED PH 2.375" Satin AL
L5	⊕PL	Description: Pendant light Lamp: (1)SM16-07-10D-830-03 - 8W [475 LMS][3000K][SORAA] Optics/Features: LBL Cypree Pendant Slender modern organic-shaped frosted glass. 8 watt replaceable 500 lumen 80 CRI 3000K LED SORAAÂ® module and 6' of field-cuttable suspension cable Location/Remarks: Fixtures to be located in Entry Lobby		8 WATTS	120 V	Fixtures to remain energized at all times	LUMINAIRE: LBL HS463FRSC-LEDS830MPT
L6	⊕S	Description: Surface mounted light Lamp: (1) 6.5A19/2200-2700 DM 6/1 - 6.5W [450 LMS][2700K][PHILIPS] Optics/Features: 12.5W A19, 8W A19 and 17W A21 versions available, Smooth dimming to 10% of full light levels, Remote phosphor (yellow) disappears when energized to create even, soft white light, 25,000-hour rated average life+ Instant-on light Location/Remarks: Fixtures to be located in Dwelling unit closets		6.5 WATTS	120 V	Fixtures shall be controlled by: LEVITON DECORA DSM10-1LZ Universal Decora Dimmable LED, Rocker-Slide Dimmer, 450W-120VAC Dimmable LED Single Pole or 3-Way White	LUMINAIRE: KITCHLER 8881WH
L7	⊢⊕	Description: Surface wall Sconce Lamp: (1)10 watt 800 lumen 80 CRI 3000K LED module - EAHP1215WBR [EVERLIGHT] Optics/Features: Hidden within a sleek metal body, an ultra-thin LED light guide panel produces plenty of task illumination ideal for the bath. A thin, forward facing light reveal adds a touch of elegance as the curved endcaps round out the linear nature of the Vertura 24 bathroom lighting fixture from LBL LIghting. Mounts vertically or horizontally. LM-80 Certified; High Power COB & High CRI LED; Multi-Chip Solution; Dimension:12 mm x 15 mm x 1.6 mm; Main Parameters: Luminous Flux, Forward Voltage , Chromaticity and Color Rendering Index; RoHS compliant; Energy Star / ANSI Compliant Binning Structure; Typical Viewing Angle: 115° Location/Remarks: Fixtures to be located in Dwelling unit Bathrooms		10 WATTS	120 V	Fixtures shall be controlled by: LEVITON DECORA DSM10-1LZ Universal Decora Dimmable LED, Rocker-Slide Dimmer, 450W-120VAC Dimmable LED Single Pole or 3-Way White	LUMINAIRE: LBL VERTURA 24 BA867SCLED830 SATIN NICKEL
L8	⊕ (corridor)	Description: Surface wall Sconce Lamp: (1)28 watt 2000 lumen 80 CRI 3000K LED module - EAHP1215WBR [EVERLIGHT] Optics/Features: Modern technology meets architectural form in this sophisticated and versatile ceiling light fixture. Riffing on the concept of an elongated 'V', the sleek aluminum body of the Vantra ceiling light from LBL Lighting also serves as the heat sink for the twin LED light guide panels. These visually floating light panels create a unique sense of wonder and offer a choice of outputs including 100% forward or direct/indirect light distribution Ceiling or wall mount. When mounted on the wall, mounts vertically or horizontally. LM-80 Certified; High Power COB & High CRI LED; Multi-Chip Solution; Dimension:12 mm x 15 mm x 1.6 mm; Main Parameters: Luminous Flux, Forward Voltage , Chromaticity and Color Rendering Index; RoHS compliant; Energy Star / ANSI Compliant Binning Structure; Typical Viewing Angle: 115° Location/Remarks: Fixtures to be located in Building corridors		28 WATTS	120 V	Fixtures to remain energized at all times	LUMINAIRE: LBL VANTRA FLUSH MOUNT FM853SCRF-LED830 SATIN NICKEL
L9	⊢⊕EX	Description: Exterior wall Sconce Lamp: (1)9.6 watt 840 lumen 80 CRI 2700K LED module - EAHP1215WBR [EVERLIGHT] Optics/Features: Folded metal frame inspired by modern architecture. Mounts down only. LM-80 Certified; High Power COB & High CRI LED; Multi-Chip Solution; Dimension:12 mm x 15 mm x 1.6 mm; Main Parameters: Luminous Flux, Forward Voltage , Chromaticity and Color Rendering Index; RoHS compliant; Energy Star / ANSI Compliant Binning Structure; Typical Viewing Angle: 115° Location/Remarks: Fixtures to be located at dwelling unit exterior balconies		9.6 WATTS	120 V	Fixtures shall be controlled by: LEVITON DECORA DSM10-1LZ Universal Decora Dimmable LED, Rocker-Slide Dimmer, 450W-120VAC Dimmable LED Single Pole or 3-Way White	LUMINAIRE: LBL TARA 18 OD743BZLEDW
L10	——	Description: Undercounter strip light Lamp: (1)10 watt 479 lumen 80 CRI 4000K LED module - 910503702218 [PHILIPS] Optics/Features: Housing Extruded aluminium, polycarbonate. White, Black, or Gray powder-coated finish. ; Lens: Polycarbonate; Fixture Connections Integral male / female connectors Temperature Ranges -4° – 122° F (-20° – 50° C) Operating -4° – 122° F (-20° – 50° C) Startup -40° – 176° F (-40° – 80° C) Storage Humidity 0 – 95%, non-condensing; Fixture Run Length Up to 50 ft (15.3 m) of fixtures in a single run, ≤ 324 W; Certification and SafetyCertification UL / cUL, F CC Class B, CE, C-Tick, ENERGY STAR (120 VAC); Environment Dry / Damp Location, IP50 Location/Remarks: Fixtures to be located under kitchen cabinetry		10 WATTS	120 V	Fixtures shall be controlled by: LEVITON DECORA DSM10-1LZ Universal Decora Dimmable LED, Rocker-Slide Dimmer, 450W-120VAC Dimmable LED Single Pole or 3-Way White	LUMINAIRE: PHILIPS eW PROFILE POWERCORE 4000K, 19.25 IN. 523-00002646
L11	⊕	Description: Common corridor pendant Lamp: (1)20 watt 1420 lumen 80 CRI 2700K LED module - 80-905 [KOLOURONE-SATCO] Optics/Features: 1-Light Flush Mounted Dome LED Ceiling Light in Polished Nickel Finish and Frosted GlassMotivation WITH 19.5W 120V 2700K 110 Degree Beam 30,000 Hour Circular LED Dimmable Light Engine - Self-contained simple plug and play design - Integrated power supply - No external driver, heat sink or drivers - Easily replaceable - Sleek, space-saving design - RU damp located listed Location/Remarks: Fixtures to be located in Building corridors		20 WATTS	120 V	Fixtures to remain energized at all times	LUMINAIRE: NUVO 62-302
L12	⊢⊕WP	Description: Common corridor pendant Lamp: (1)14 watt 710 lumen 80 CRI 4000K LED module - TLW10LED4KPCB-1 [PHILIPS] Optics/Features: 13.9 watt high-powered LED array; 50,000 hour life; Lightweight, compact design Sturdy die-cast aluminum housing; Architectural bronze UV resistant powder coat finish; UV stabilized polycarbonate lens/refractor UV stabilized polycarbonate front housing; Continuous silicone rubber gasket between housing and lens/cover; Energy-efficient, high-powered LED Array Provides 707 delivered lumens, LM79; Excellent heat management for long life Efficacy: 50.9 lumens per watt (LPW); CRI: 86; 4386 CCT Operating temperature: -25°C (-13°F) to 35°C (95°F) Voltage: 120V 50/60Hz; Factory-installed photocontrol; UL Listed for wet locations 5-year warranty Location/Remarks: Fixtures to be located in Building corridors		14 WATTS	120 V	Fixtures to be controlled by photocell	LUMINAIRE: PHILIPS TWILIGHTER LED WALL PAK TWL10LED4KPCB1
L13	(fluorescent, EM)	Description: Back of House surface mounted fixture Lamp: (1)28 watt 2763 lumen 80 CRI 3500K LED module - 29WLED [PHILIPS] Optics/Features: A highly efficient, visually comfortable, architecturally styled recessed LED luminaire designed with a minimalistic strategy to achieve sustainable objectives. Low profile configuration is only 3" high with sloped sides for a sleek appearance. Clean, modern design provides architectural styling compatible with virtually any area. Soft opal diffuser with large luminous area minimizes apparent brightness and provides high visual comfort perfect for a wide variety of general lighting applications like offices, schools, retail, or healthcare. Four lumen packages over a wide range provide significant application flexibility over light levels and/or luminaire spacing. A high lumen package can be used in conjunction with wide luminaire spacing to reduce luminaire quantities and overall cost while maintaining good uniformity. Directs a controlled amount of light to the higher angles in the room to balance the brightness of the surfaces and eliminate "cave effect" while creating the impression of a larger, brighter space without glare. Excellent color rendering with a CRI of 80. LEDs are an excellent source for use with controls since dimming or frequent switching does not degrade the performance or life of the source. External sensors are available for use. Surface mount design requires no plenum space. Some DuaLED luminaires are DesignLights Consortium® qualified. Please see the DLC QPL list for exact catalog numbers. (www.designlights.org/QPL) 27L and 347V are not DLC qualified. Location/Remarks: Fixtures to be located in mechanical rooms, stairs		28 WATTS	120 V	Fixtures to be controlled by motion sensor	LUMINAIRE: PHILIPS DUAL LED SURFACE DAY-BRITE ISDL27L835-4-D-UNV-DIM 1X4 FT
L14	(fluorescent)	Description: Back of House surface mounted fixture Lamp: (1)28 watt 2763 lumen 80 CRI 3500K LED module - 29WLED [PHILIPS] Optics/Features: A highly efficient, visually comfortable, architecturally styled recessed LED luminaire designed with a minimalistic strategy to achieve sustainable objectives. Low profile configuration is only 3" high with sloped sides for a sleek appearance. Clean, modern design provides architectural styling compatible with virtually any area. Soft opal diffuser with large luminous area minimizes apparent brightness and provides high visual comfort perfect for a wide variety of general lighting applications like offices, schools, retail, or healthcare. Four lumen packages over a wide range provide significant application flexibility over light levels and/or luminaire spacing. A high lumen package can be used in conjunction with wide luminaire spacing to reduce luminaire quantities and overall cost while maintaining good uniformity. Directs a controlled amount of light to the higher angles in the room to balance the brightness of the surfaces and eliminate "cave effect" while creating the impression of a larger, brighter space without glare. Excellent color rendering with a CRI of 80. LEDs are an excellent source for use with controls since dimming or frequent switching does not degrade the performance or life of the source. External sensors are available for use. Surface mount design requires no plenum space. Some DuaLED luminaires are DesignLights Consortium® qualified. Please see the DLC QPL list for exact catalog numbers. (www.designlights.org/QPL) 27L and 347V are not DLC qualified. Location/Remarks: Fixtures to be located in mechanical rooms, stairs		28 WATTS	120 V	Fixtures to remain energized at all times	LUMINAIRE: PHILIPS DUAL LED SURFACE DAY-BRITE ISDL27L835-4-D-UNV-DIM 1X4 FT
L15	⊢⊕EX	Description: Exterior wall Sconce Lamp: (1)9.6 watt 840 lumen 80 CRI 2700K LED module - EAHP1215WBR [EVERLIGHT] Optics/Features: Folded metal frame inspired by modern architecture. Mounts down only. LM-80 Certified; High Power COB & High CRI LED; Multi-Chip Solution; Dimension:12 mm x 15 mm x 1.6 mm; Main Parameters: Luminous Flux, Forward Voltage , Chromaticity and Color Rendering Index; RoHS compliant; Energy Star / ANSI Compliant Binning Structure; Typical Viewing Angle: 115° Location/Remarks: Fixtures to be located at dwelling unit exterior balconies		9.6 WATTS	120 V	Fixtures to be controlled by photocell	LUMINAIRE: LBL TARA 18 OD743BZLEDW

Narrative A-406.00

Room Number/Type	Control Strategy Recommendation
Corridors/Elevator lobbies	Automatic on/off of 50% of fixtures. 50% of fixtures to remain energized at all times (i.e. emergency fixtures remain on).
Stairs	Astronomical timeclock with occupancy sensor to de-energize 50% of fixtures. 50% of fixtures to remain energized at all times.
Elec./Mechanical Rooms	Astronomical timeclock with occupancy sensor to de-energize 50% of fixtures. 50% of fixtures to remain energized at all times.
Dwelling Units	Local switches to control fixtures in dwelling units (manual off/on). Fixtures to remain energized at all times
Balconies	Local switches to control fixtures in dwelling units (manual off/on). Fixtures to remain energized at all times

R.C.P. LEGEND

Symbol	Description
⊕	CEILING LIGHT-RECESSED
⊕EM	CEILING LIGHT-RECESSED, W/ EMERGENCY BATTERY BACK UP
⊕SH	SHOWER LIGHT-RECESSED, WATER PROOF
⊕P	CEILING LIGHT-PENDANT
⊢⊕	WALL SCONCE
⊢⊕EX	WALL SCONCE (EXTERIOR)
	WALL SCONCE (CORRIDOR)
	UNDERCABINET LED STRIP WORK LIGHT
	FLUORESCENT CEILING LIGHT, SURFACE MOUNTED
EM	FLUORESCENT CEILING LIGHT, SURFACE MOUNTED W/ EMERGENCY BATTERY BACK UP
M	MOTION DETECTOR SENSOR
SM CO	SMOKE/CARBON MONOXIDE DETECTOR, HARD WIRED, WALL MOUNT
IC	INTERCOM, 52" AFF
T	THERMOSTAT
	PHONE / DATA OUTLET
	DUPLEX RECEPTACLE
	FLOOR RECEPTACLE
EX	DUPLEX RECEPTACLE, EXTERIOR
	QUAD RECEPTACLE
	EXIT SIGN W/ EMERGENCY LIGHTS, CEILING MOUNT
	FIRE ALARM SPEAKER
	12" DROP SOFFIT AT KITCHENETTES
	ELECTRIC PANEL
▼ ●	SPRINKLER HEADS

ARCHITECT:
MORALI ARCHITECTURE
505 8th AVENUE, SUITE 2202, NEW YORK, NY, 10018
TEL. 212 219 2091 E-MAIL: MSTUDIONY@AOL.COM

IMA ENGINEERING , PC
123-23 82 AVENUE, KEW GARDENS, NY, 11415 TEL: 718 268 8600

ADVANCED CLEANUP TECHNOLOGIES, INC.
110 MAIN STREET, SUITE 103, PORT WASHINGTON, NY, 11050

COPYRIGHT (C)
THESE PLAN ARE AN INSTRUMENT OF SERVICE AND ARE THE PROPERTY OF THE ARCHITECT.
This and all documents produced by this firm under this agreement shall remain the sole property of this firm and may not be used, copied, changed or distributed by the client or others without the written consent of this firm.
INFRINGEMENTS WILL BE PROSECUTED.

CONTRACTOR SHALL VERIFY ALL CONDITIONS AND MEASUREMENTS IN THE FIELD AND BE RESPONSIBLE FOR FIELD FIT AND QUANTITY OF WORK. NO ALLOWANCES SHALL BE MADE IN BEHALF OF THE CONTRACTOR FOR ANY ERROR OR NEGLECT ON HIS PART.

"THIS PLAN IS APPROVED ONLY FOR WORK INDICATED ON THE APPLICATION SPECIFICATION SHEET. ALL OTHER MATTERS SHOWN ARE NOT TO BE RELIED UPON, OR TO BE CONSIDERED AS EITHER BEING APPROVED OR IN ACCORDANCE WITH APPLICABLE CODES."

No.	Description	Date

PROJECT
36-37 31ST STREET
LONG ISLAND CITY, NY
11106

SIXTH FLOOR REFLECTED CEILING PLAN

SCALE : AS NOTED

SEAL
REGISTERED ARCHITECT ANTHONY J. MORALI 017683-1 STATE OF NEW YORK

Date	10.12.15
Project Number	1507
Drawn By	CI
Checked By	AM

A-406.00

SEVENTH FLOOR RCP

SCALE: $\frac{3}{16}$" = 1'-0"

Narrative A-407.00

Room Number/Type	Control Strategy Recommendation
Corridors/Elevator lobbies	Automatic on/off of 50% of fixtures. 50% of fixtures to remain energized at all times (i.e. emergency fixtures remain on).
Stairs	Astronomical timeclock with occupancy sensor to de-energize 50% of fixtures. 50% of fixtures to remain energized at all times.
Elec./Mechanical Rooms	Astronomical timeclock with occupancy sensor to de-energize 50% of fixtures. 50% of fixtures to remain energized at all times.
Dwelling Units	Local switches to control fixtures in dwelling units (manual off/on). Fixtures to remain energized at all times
Balconies	Local switches to control fixtures in dwelling units (manual off/on). Fixtures to remain energized at all times

R.C.P. LEGEND

⊕	CEILING LIGHT-RECESSED
⊕ EM	CEILING LIGHT-RECESSED, W/ EMERGENCY BATTERY BACK UP
⊕ SH	SHOWER LIGHT-RECESSED, WATER PROOF
⊕ P	CEILING LIGHT-PENDANT
	WALL SCONCE
EX	WALL SCONCE (EXTERIOR)
	WALL SCONCE (CORRIDOR)
	UNDERCABINET LED STRIP WORK LIGHT
	FLUORESCENT CEILING LIGHT, SURFACE MOUNTED
EM	FLUORESCENT CEILING LIGHT, SURFACE MOUNTED W/ EMERGENCY BATTERY BACK UP
M	MOTION DETECTOR SENSOR
SM CO	SMOKE/CARBON MONOXIDE DETECTOR, HARD WIRED, WALL MOUNT
IC	INTERCOM, 52" AFF
T	THERMOSTAT
	PHONE / DATA OUTLET
	DUPLEX RECEPTACLE
	FLOOR RECEPTACLE
EX	DUPLEX RECEPTACLE, EXTERIOR
	QUAD RECEPTACLE
	EXIT SIGN W/ EMERGENCY LIGHTS, CEILING MOUNT
	FIRE ALARM SPEAKER
	12" DROP SOFFIT AT KITCHENETTES
	ELECTRIC PANEL
▼ ●	SPRINKLER HEADS

LIGHT FIXTURE SCHEDULE

TYPE	SYMBOL	DESCRIPTION	PHOTOMETRY	SYSTEM WATTS	VOLTAGE	CONTROL INTENT	MANUFACTURER
L1		Description: Recessed LED fixture Lightolier Lytecaster Uniframe 6-3/4" with black baffle Lamp: (1) 433672 - 8A19/SLIM/2700 DIM 6/1 8-40W[450 LMS][2700K](PHILIPS) Optics/Features: Housing: (0.05") thick powder coated aluminum provides integrated thermal management allowing for a low profile at less than 3-1/2" tall. LED board: High efficiency mid-flux LED's. Mixing chamber: 98% reflective, highly diffuse film. Diffusion lens: (0.06") thick opal lens provides an even source of illumination. Retaining ring: (0.04") thick powder coated aluminum,secures module components. Reflector: 30% glass reinforced injection molded poly carbonate is durable and provides a 70° cutoff to the source. Retaining clips: 29 gauge Stainless Steel, allowstool-less installation of light engine to trim. Location/Remarks: Fixtures to be located in dwelling units at dropped ceiling areas		8 WATTS	120 V	Recessed fixtures shall be controlled by: LEVITON DECORA DSM10-1LZ Universal Decora Dimmable LED, Rocker-Slide Dimmer, 450W-120VAC Dimmable LED Single Pole or 3-Way White	LUMINAIRE: LIGHTOLIER - LYTECASTER - 1176LED09N27D1
L2		Description: Recessed LED fixture Lightolier Lytecaster Uniframe 6-3/4" with black baffle Lamp: (1) 433672 - 8A19/SLIM/2700 DIM 6/1 8-40W[450 LMS][2700K](PHILIPS) Optics/Features: Housing: (0.05") thick powder coated aluminum provides integrated thermal management allowing for a low profile at less than 3-1/2" tall. LED board: High efficiency mid-flux LED's. Mixing chamber: 98% reflective, highly diffuse film. Diffusion lens: (0.06") thick opal lens provides an even source of illumination. Retaining ring: (0.04") thick powder coated aluminum,secures module components. Reflector: 30% glass reinforced injection molded poly carbonate is durable and provides a 70° cutoff to the source. Retaining clips: 29 gauge Stainless Steel, allowstool-less installation of light engine to trim. Location/Remarks: Fixtures to be located in public corridors and Elevator Lobbies		8 WATTS	120 V	Fixtures to remain energized at all times	LUMINAIRE: LIGHTOLIER - LYTECASTER - 1176LED09N27D1
L3		Description: Recessed LED fixture Lightolier Lytecaster Uniframe 6-3/4" with opal disk for wet location Lamp: (1) 433672 - 8A19/SLIM/2700 DIM 6/1 8-40W[450 LMS][2700K](PHILIPS) Optics/Features: Housing: (0.05") thick powder coated aluminum provides integrated thermal management allowing for a low profile at less than 3-1/2" tall. LED board: High efficiency mid-flux LED's. Mixing chamber: 98% reflective, highly diffuse film. Diffusion lens: (0.06") thick opal lens provides an even source of illumination. Retaining ring: (0.04") thick powder coated aluminum,secures module components. Reflector: 30% glass reinforced injection molded poly carbonate is durable and provides a 70° cutoff to the source. Retaining clips: 29 gauge Stainless Steel, allowstool-less installation of light engine to trim. Location/Remarks: Fixtures to be located in public corridors and Elevator Lobbies		8 WATTS	120 V	Recessed fixtures shall be controlled by: LEVITON DECORA DSM10-1LZ Universal Decora Dimmable LED, Rocker-Slide Dimmer, 450W-120VAC Dimmable LED Single Pole or 3-Way White	LUMINAIRE: LIGHTOLIER - LYTECASTER - 1121LED09N27D1
L4		Description: PS Series Decorative, Vetro LED Pendant (straight) 2.375" Satin AL Lamp: (1) PS01LW40SAU - 7.5W[356 LMS][3000K](PHILIPS) Optics/Features: Power Head: Die cast and extruded aluminum components. Brushed and clear lacquer finish. Primary Diffuser: (SG01L) Triplex hand blown glass or (SA01L) opal acrylic. Outer Glass/Acrylic Assembly: (GLS01) A straight section of clear extruded glass with polished edges, (GLS02) a conical section of clear hand blown glass with polished edges, or (GLS01A) a straight section of clear acrylic. All outer assemblies come with a die cast aluminum holder ring with stainless steel support pins. Optical Mixing Chamber: Remote phosphor technology provides increased efficiency and color stability. Phosphor lens assembly positioned in front of LED array converts blue light to white and produces a wide even pattern of diffused light without bright spots created by individual LEDs. Uniform phosphor coating provides consistent, stable color with a shift of no more than +/-100K over life. Mixing chamber redirects scattered light back out through the emitting aperture. Thermal Management: Heat sink design maintains junction temperature for consistent, reliable performance and 50,000 hour lifetime at 70% lumen maintenance. Location/Remarks: Fixtures to be located in dwelling units at kitchen areas		7.5 WATTS	120 V	Fixtures shall be controlled by: LEVITON DECORA DSM10-1LZ Universal Decora Dimmable LED, Rocker-Slide Dimmer, 450W-120VAC Dimmable LED Single Pole or 3-Way White	LUMINAIRE: PHILIPS PS01LW40SAU Vetro LED PH 2.375" Satin AL
L5		Description: Pendant light Lamp: (1)SM16-07-10D-830-03 - 8W [475 LMS][3000K][SORAA] Optics/Features: LBL Cypree Pendant Slender modern organic-shaped frosted glass. 8 watt replaceable 500 lumen 80 CRI 3000K LED SORAAÂ® module and 6' of field-cuttable suspension cable Location/Remarks: Fixtures to be located in Entry Lobby		8 WATTS	120 V	Fixtures to remain energized at all times	LUMINAIRE: LBL HS463FRSC-LEDS830MPT
L6		Description: Surface mounted light Lamp: (1) 6.5A19/2200-2700 DM 6/1 - 6.5W [450 LMS][2700K][PHILIPS] Optics/Features: 12.5W A19, 8W A19 and 17W A21 versions available, Smooth dimming to 10% of full light levels, Remote phosphor (yellow) disappears when energized to create even, soft white light, 25,000-hour rated average life+ Instant-on light Location/Remarks: Fixtures to be located in Dwelling unit closets		6.5 WATTS	120 V	Fixtures shall be controlled by: LEVITON DECORA DSM10-1LZ Universal Decora Dimmable LED, Rocker-Slide Dimmer, 450W-120VAC Dimmable LED Single Pole or 3-Way White	LUMINAIRE: KITCHLER 8881WH
L7		Description: Surface wall Sconce Lamp: (1)10 watt 800 lumen 80 CRI 3000K LED module - EAHP1215WBR [EVERLIGHT] Optics/Features: Hidden within a sleek metal body, an ultra-thin LED light guide panel produces plenty of task illumination ideal for the bath. A thin, forward facing light reveal adds a touch of elegance as the curved endcaps round out the linear nature of the Vertura 24 bathroom lighting fixture from LBL LIghting. Mounts vertically or horizontally. LM-80 Certified; High Power COB & High CRI LED; Multi-Chip Solution; Dimension:12 mm x 15 mm x 1.6 mm; Main Parameters: Luminous Flux, Forward Voltage , Chromaticity and Color Rendering Index; RoHS compliant; Energy Star / ANSI Compliant Binning Structure; Typical Viewing Angle: 115° Location/Remarks: Fixtures to be located in Dwelling unit Bathrooms		10 WATTS	120 V	Fixtures shall be controlled by: LEVITON DECORA DSM10-1LZ Universal Decora Dimmable LED, Rocker-Slide Dimmer, 450W-120VAC Dimmable LED Single Pole or 3-Way White	LUMINAIRE: LBL VERTURA 24 BA867SCLED830 SATIN NICKEL
L8		Description: Surface wall Sconce Lamp: (1)28 watt 2000 lumen 80 CRI 3000K LED module - EAHP1215WBR [EVERLIGHT] Optics/Features: Modern technology meets architectural form in this sophisticated and versatile ceiling light fixture. Riffing on the concept of an elongated 'V', the sleek aluminum body of the Vantra ceiling light from LBL Lighting also serves as the heat sink for the twin LED light guide panels. These visually floating light panels create a unique sense of wonder and offer a choice of outputs including 100% forward or direct/indirect light distribution Ceiling or wall mount. When mounted on the wall, mounts vertically or horizontally. LM-80 Certified; High Power COB & High CRI LED; Multi-Chip Solution; Dimension:12 mm x 15 mm x 1.6 mm; Main Parameters: Luminous Flux, Forward Voltage , Chromaticity and Color Rendering Index; RoHS compliant; Energy Star / ANSI Compliant Binning Structure; Typical Viewing Angle: 115° Location/Remarks: Fixtures to be located in Building corridors		28 WATTS	120 V	Fixtures to remain energized at all times	LUMINAIRE: LBL VANTRA FLUSH MOUNT FM853SCRF-LED830 SATIN NICKEL
L9		Description: Exterior wall Sconce Lamp: (1)9.6 watt 840 lumen 80 CRI 2700K LED module - EAHP1215WBR [EVERLIGHT] Optics/Features: Folded metal frame inspired by modern architecture. Mounts down only. LM-80 Certified; High Power COB & High CRI LED; Multi-Chip Solution; Dimension:12 mm x 15 mm x 1.6 mm; Main Parameters: Luminous Flux, Forward Voltage , Chromaticity and Color Rendering Index; RoHS compliant; Energy Star / ANSI Compliant Binning Structure; Typical Viewing Angle: 115° Location/Remarks: Fixtures to be located at dwelling unit exterior balconies		9.6 WATTS	120 V	Fixtures shall be controlled by: LEVITON DECORA DSM10-1LZ Universal Decora Dimmable LED, Rocker-Slide Dimmer, 450W-120VAC Dimmable LED Single Pole or 3-Way White	LUMINAIRE: LBL TARA 18 OD743BZLEDW
L10		Description: Undercounter strip light Lamp: (1)10 watt 479 lumen 80 CRI 4000K LED module - 910503702218 [PHILIPS] Optics/Features: Housing Extruded aluminium, polycarbonate. White, Black, or Gray powder-coated finish. ; Lens: Polycarbonate; Fixture Connections Integral male / female connectors Temperature Ranges -4° – 122° F (-20° – 50° C) Operating -4° – 122° F (-20° – 50° C) Startup -40° – 176° F (-40° – 80° C) Storage Humidity 0 – 95%, non-condensing; Fixture Run Length Up to 50 ft (15.3 m) of fixtures in a single run, ≤ 324 W; Certification and SafetyCertification UL / cUL, F CC Class B, CE, C-Tick, ENERGY STAR (120 VAC); Environment Dry / Damp Location, IP50 Location/Remarks: Fixtures to be located under kitchen cabinetry		10 WATTS	120 V	Fixtures shall be controlled by: LEVITON DECORA DSM10-1LZ Universal Decora Dimmable LED, Rocker-Slide Dimmer, 450W-120VAC Dimmable LED Single Pole or 3-Way White	LUMINAIRE: PHILIPS eW PROFILE POWERCORE 4000K, 19.25 IN. 523-00002646
L11		Description: Common corridor pendant Lamp: (1)20 watt 1420 lumen 80 CRI 2700K LED module - 80-905 [KOLOURONE-SATCO] Optics/Features: 1-Light Flush Mounted Dome LED Ceiling Light in Polished Nickel Finish and Frosted GlassMotivation WITH 19.5W 120V 2700K 110 Degree Beam 30,000 Hour Circular LED Dimmable Light Engine - Self-contained simple plug and play design - Integrated power supply - No external driver, heat sink or drivers - Easily replaceable - Sleek, space-saving design - RU damp located listed Location/Remarks: Fixtures to be located in Building corridors		20 WATTS	120 V	Fixtures to remain energized at all times	LUMINAIRE: NUVO 62-302
L12		Description: Common corridor pendant Lamp: (1)14 watt 710 lumen 80 CRI 4000K LED module - TLW10LED4KPCB-1 [PHILIPS] Optics/Features: 13.9 watt high-powered LED array; 50,000 hour life; Lightweight, compact design Sturdy die-cast aluminum housing; Architectural bronze UV resistant powder coat finish; UV stabilized polycarbonate lens/refractor UV stabilized polycarbonate front housing; Continuous silicone rubber gasket between housing and lens/cover; Energy-efficient, high-powered LED Array Provides 707 delivered lumens, LM79; Excellent heat management for long life Efficacy: 50.9 lumens per watt (LPW); CRI: 86; 4386 CCT Operating temperature: -25°C (-13°F) to 35°C (95°F) Voltage: 120V 50/60Hz; Factory-installed photocontrol; UL Listed for wet locations 5-year warranty Location/Remarks: Fixtures to be located in Building corridors		14 WATTS	120 V	Fixtures to be controlled by photocell	LUMINAIRE: PHILIPS TWILIGHTER LED WALL PAK TWL10LED4KPCB1
L13		Description: Back of House surface mounted fixture Lamp: (1)28 watt 2763 lumen 80 CRI 3500K LED module - 29WLED [PHILIPS] Optics/Features: A highly efficient, visually comfortable, architecturally styled recessed LED luminaire designed with a minimalistic strategy to achieve sustainable objectives. Low profile configuration is only 3" high with sloped sides for a sleek appearance. Clean, modern design provides architectural styling compatible with virtually any area. Soft opal diffuser with large luminous area minimizes apparent brightness and provides high visual comfort perfect for a wide variety of general lighting applications like offices, schools, retail, or healthcare. Four lumen packages over a wide range provide significant application flexibility over light levels and/or luminaire spacing. A high lumen package can be used in conjunction with wide luminaire spacing to reduce luminaire quantities and cost while maintaining good uniformity. Directs a controlled amount of light to the higher angles in the room to balance the brightness of the surfaces and eliminate "cave effect" while creating the impression of a larger, brighter space without glare. Excellent color rendering with a CRI of 80. LEDs are an excellent source for use with controls since dimming or frequent switching does not degrade the performance or life of the source. External sensors are available for use. Surface mount design requires no plenum space. Some DuaLED luminaires are DesignLights Consortium® qualified. Please see the DLC QPL list for exact catalog numbers. (www.designlights.org/QPL) 27L and 347V are not DLC qualified. Location/Remarks: Fixtures to be located in mechanical rooms, stairs		28 WATTS	120 V	Fixtures to be controlled by motion sensor	LUMINAIRE: PHILIPS DUAL LED SURFACE DAY-BRITE ISDL27L835-4-D-UNV-DIM 1X4 FT
L14		Description: Back of House surface mounted fixture Lamp: (1)28 watt 2763 lumen 80 CRI 3500K LED module - 29WLED [PHILIPS] Optics/Features: A highly efficient, visually comfortable, architecturally styled recessed LED luminaire designed with a minimalistic strategy to achieve sustainable objectives. Low profile configuration is only 3" high with sloped sides for a sleek appearance. Clean, modern design provides architectural styling compatible with virtually any area. Soft opal diffuser with large luminous area minimizes apparent brightness and provides high visual comfort perfect for a wide variety of general lighting applications like offices, schools, retail, or healthcare. Four lumen packages over a wide range provide significant application flexibility over light levels and/or luminaire spacing. A high lumen package can be used in conjunction with wide luminaire spacing to reduce luminaire quantities and cost while maintaining good uniformity. Directs a controlled amount of light to the higher angles in the room to balance the brightness of the surfaces and eliminate "cave effect" while creating the impression of a larger, brighter space without glare. Excellent color rendering with a CRI of 80. LEDs are an excellent source for use with controls since dimming or frequent switching does not degrade the performance or life of the source. External sensors are available for use. Surface mount design requires no plenum space. Some DuaLED luminaires are DesignLights Consortium® qualified. Please see the DLC QPL list for exact catalog numbers. (www.designlights.org/QPL) 27L and 347V are not DLC qualified. Location/Remarks: Fixtures to be located in mechanical rooms, stairs		28 WATTS	120 V	Fixtures to remain energized at all times	LUMINAIRE: PHILIPS DUAL LED SURFACE DAY-BRITE ISDL27L835-4-D-UNV-DIM 1X4 FT
L15		Description: Exterior wall Sconce Lamp: (1)9.6 watt 840 lumen 80 CRI 2700K LED module - EAHP1215WBR [EVERLIGHT] Optics/Features: Folded metal frame inspired by modern architecture. Mounts down only. LM-80 Certified; High Power COB & High CRI LED; Multi-Chip Solution; Dimension:12 mm x 15 mm x 1.6 mm; Main Parameters: Luminous Flux, Forward Voltage , Chromaticity and Color Rendering Index; RoHS compliant; Energy Star / ANSI Compliant Binning Structure; Typical Viewing Angle: 115° Location/Remarks: Fixtures to be located at dwelling unit exterior balconies		9.6 WATTS	120 V	Fixtures to be controlled by photocell	LUMINAIRE: LBL TARA 18 OD743BZLEDW

ARCHITECT:
MORALI ARCHITECTURE
505 8th AVENUE, SUITE 2202, NEW YORK, NY, 10018
TEL. 212 219 2091 E-MAIL: MSTUDIONY@AOL.COM

IMA ENGINEERING , PC
123-23 82 AVENUE, KEW GARDENS, NY, 11415 TEL: 718 268 8600

ADVANCED CLEANUP TECHNOLOGIES, INC.
110 MAIN STREET, SUITE 103, PORT WASHINGTON, NY, 11050

COPYRIGHT (C)
THESE PLAN ARE AN INSTRUMENT OF SERVICE AND ARE THE PROPERTY OF THE ARCHITECT.
This and all documents produced by this firm under this agreement shall remain the sole property of this firm and may not be used, copied, changed or distributed by the client or others without the written consent of this firm.
INFRINGEMENTS WILL BE PROSECUTED.

CONTRACTOR SHALL VERIFY ALL CONDITIONS AND MEASUREMENTS IN THE FIELD AND BE RESPONSIBLE FOR FIELD FIT AND QUANTITY OF WORK. NO ALLOWANCES SHALL BE MADE IN BEHALF OF THE CONTRACTOR FOR ANY ERROR OR NEGLECT ON HIS PART.

"THIS PLAN IS APPROVED ONLY FOR WORK INDICATED ON THE APPLICATION SPECIFICATION SHEET. ALL OTHER MATTERS SHOWN ARE NOT TO BE RELIED UPON, OR TO BE CONSIDERED AS EITHER BEING APPROVED OR IN ACCORDANCE WITH APPLICABLE CODES."

No.	Description	Date

PROJECT

36-37 31ST STREET
LONG ISLAND CITY, NY
11106

SEVENTH FLOOR REFLECTED CEILING PLAN

SCALE : AS NOTED

SEAL: REGISTERED ARCHITECT ANTHONY J. MORALI 017683-1 STATE OF NEW YORK

Date	10.12.15
Project Number	1507
Drawn By	CI
Checked By	AM

A-407.00

ROOF LEVEL RCP
SCALE: 3/16" = 1'-0"

R.C.P. LEGEND

Symbol	Description
	CEILING LIGHT-RECESSED
EM	CEILING LIGHT-RECESSED, W/ EMERGENCY BATTERY BACK UP
SH	SHOWER LIGHT-RECESSED, WATER PROOF
P	CEILING LIGHT-PENDANT
	WALL SCONCE
EX	WALL SCONCE (EXTERIOR)
	WALL SCONCE (CORRIDOR)
	UNDERCABINET LED STRIP WORK LIGHT
	FLUORESCENT CEILING LIGHT, SURFACE MOUNTED
EM	FLUORESCENT CEILING LIGHT, SURFACE MOUNTED W/ EMERGENCY BATTERY BACK UP
M	MOTION DETECTOR SENSOR
SM CO	SMOKE/CARBON MONOXIDE DETECTOR, HARD WIRED, WALL MOUNT
IC	INTERCOM, 52" AFF
T	THERMOSTAT
	PHONE / DATA OUTLET
	DUPLEX RECEPTACLE
	FLOOR RECEPTACLE
EX	DUPLEX RECEPTACLE, EXTERIOR
	QUAD RECEPTACLE
	EXIT SIGN W/ EMERGENCY LIGHTS, CEILING MOUNT
	FIRE ALARM SPEAKER
	12" DROP SOFFIT AT KITCHENETTES
	ELECTRIC PANEL
▼ ●	SPRINKLER HEADS

LIGHT FIXTURE SCHEDULE

TYPE	SYMBOL	DESCRIPTION	PHOTOMETRY	SYSTEM WATTS	VOLTAGE	CONTROL INTENT	MANUFACTURER
L1		Description: Recessed LED fixture Lightolier Lytecaster Uniframe 6-3/4" with black baffle Lamp: (1) 433672 - 8A19/SLIM/2700 DIM 6/1 8-40W[450 LMS][2700K](PHILIPS) Optics/Features: Housing: (0.05") thick powder coated aluminum provides integrated thermal management allowing for a low profile at less than 3-1/2" tall. LED board: High efficiency mid-flux LED's. Mixing chamber: 98% reflective, highly diffuse film. Diffusion lens: (0.06") thick opal lens provides an even source of illumination. Retaining ring: (0.04") thick powder coated aluminum,secures module components. Reflector: 30% glass reinforced injection molded poly carbonate is durable and provides a 70° cutoff to the source. Retaining clips: 29 gauge Stainless Steel, allowstool-less installation of light engine to trim. Location/Remarks: Fixtures to be located in dwelling units at dropped ceiling areas		8 WATTS	120 V	Recessed fixtures shall be controlled by: LEVITON DECORA DSM10-1LZ Universal Decora Dimmable LED, Rocker-Slide Dimmer, 450W-120VAC Dimmable LED Single Pole or 3-Way White	LUMINAIRE: LIGHTOLIER - LYTECASTER - 1176LED09N27D1
L2	EM	Description: Recessed LED fixture Lightolier Lytecaster Uniframe 6-3/4" with black baffle Lamp: (1) 433672 - 8A19/SLIM/2700 DIM 6/1 8-40W[450 LMS][2700K](PHILIPS) Optics/Features: Housing: (0.05") thick powder coated aluminum provides integrated thermal management allowing for a low profile at less than 3-1/2" tall. LED board: High efficiency mid-flux LED's. Mixing chamber: 98% reflective, highly diffuse film. Diffusion lens: (0.06") thick opal lens provides an even source of illumination. Retaining ring: (0.04") thick powder coated aluminum,secures module components. Reflector: 30% glass reinforced injection molded poly carbonate is durable and provides a 70° cutoff to the source. Retaining clips: 29 gauge Stainless Steel, allowstool-less installation of light engine to trim. Location/Remarks: Fixtures to be located in public corridors and Elevator Lobbies		8 WATTS	120 V	Fixtures to remain energized at all times	LUMINAIRE: LIGHTOLIER - LYTECASTER - 1176LED09N27D1
L3	SH	Description: Recessed LED fixture Lightolier Lytecaster Uniframe 6-3/4" with opal disk for wet location Lamp: (1) 433672 - 8A19/SLIM/2700 DIM 6/1 8-40W[450 LMS][2700K](PHILIPS) Optics/Features: Housing: (0.05") thick powder coated aluminum provides integrated thermal management allowing for a low profile at less than 3-1/2" tall. LED board: High efficiency mid-flux LED's. Mixing chamber: 98% reflective, highly diffuse film. Diffusion lens: (0.06") thick opal lens provides an even source of illumination. Retaining ring: (0.04") thick powder coated aluminum,secures module components. Reflector: 30% glass reinforced injection molded poly carbonate is durable and provides a 70° cutoff to the source. Retaining clips: 29 gauge Stainless Steel, allowstool-less installation of light engine to trim. Location/Remarks: Fixtures to be located in public corridors and Elevator Lobbies		8 WATTS	120 V	Recessed fixtures shall be controlled by: LEVITON DECORA DSM10-1LZ Universal Decora Dimmable LED, Rocker-Slide Dimmer, 450W-120VAC Dimmable LED Single Pole or 3-Way White	LUMINAIRE: LIGHTOLIER - LYTECASTER - 1121LED09N27D1
L4	P	Description: PS Series Decorative, Vetro LED Pendant (straight) 2.375" Satin AL Lamp: (1) PS01LW40SAU - 7.5W[356 LMS][3000K](PHILIPS) Optics/Features: Power Head: Die cast and extruded aluminum components. Brushed and clear lacquer finish. Primary Diffuser: (SG01L) Triplex hand blown glass or (SA01L) opal acrylic. Outer Glass/Acrylic Assembly: (GLS01) A straight section of clear extruded glass with polished edges, (GLS02) a conical section of clear hand blown glass with polished edges, or (GLS01A) a straight section of clear acrylic. All outer assemblies come with a die cast aluminum holder ring with stainless steel support pins. Optical Mixing Chamber: Remote phosphor technology provides increased efficiency and color stability. Phosphor lens assembly positioned in front of LED array converts blue light to white and produces a wide even pattern of diffused light without bright spots created by individual LEDs. Uniform phosphor coating provides consistent, stable color with a shift of no more than +/-100K over life. Mixing chamber redirects scattered light back out through the emitting aperture. Thermal Management: Heat sink design maintains junction temperature for consistent, reliable performance and 50,000 hour lifetime at 70% lumen maintenance. Location/Remarks: Fixtures to be located in dwelling units at kitchen areas		7.5 WATTS	120 V	Fixtures shall be controlled by: LEVITON DECORA DSM10-1LZ Universal Decora Dimmable LED, Rocker-Slide Dimmer, 450W-120VAC Dimmable LED Single Pole or 3-Way White	LUMINAIRE: PHILIPS PS01LW40SAU Vetro LED PH 2.375" Satin AL
L5	PL	Description: Pendant light Lamp: (1)SM16-07-10D-830-03 - 8W [475 LMS][3000K][SORAA] Optics/Features: LBL Cypree Pendant Slender modern organic-shaped frosted glass. 8 watt replaceable 500 lumen 80 CRI 3000K LED SORAAÂ® module and 6' of field-cuttable suspension cable Location/Remarks: Fixtures to be located in Entry Lobby		8 WATTS	120 V	Fixtures to remain energized at all times	LUMINAIRE: LBL HS463FRSC-LEDS830MPT
L6	S	Description: Surface mounted light Lamp: (1) 6.5A19/2200-2700 DM 6/1 - 6.5W [450 LMS][2700K][PHILIPS] Optics/Features: 12.5W A19, 8W A19 and 17W A21 versions available, Smooth dimming to 10% of full light levels, Remote phosphor (yellow) disappears when energized to create even, soft white light, 25,000-hour rated average life+ Instant-on light Location/Remarks: Fixtures to be located in Dwelling unit closets		6.5 WATTS	120 V	Fixtures shall be controlled by: LEVITON DECORA DSM10-1LZ Universal Decora Dimmable LED, Rocker-Slide Dimmer, 450W-120VAC Dimmable LED Single Pole or 3-Way White	LUMINAIRE: KITCHLER 8881WH
L7		Description: Surface wall Sconce Lamp: (1)10 watt 800 lumen 80 CRI 3000K LED module - EAHP1215WBR [EVERLIGHT] Optics/Features: Hidden within a sleek metal body, an ultra-thin LED light guide panel produces plenty of task illumination ideal for the bath. A thin, forward facing light reveal adds a touch of elegance as the curved endcaps round out the linear nature of the Vertura 24 bathroom lighting fixture from LBL LIghting. Mounts vertically or horizontally. LM-80 Certified; High Power COB & High CRI LED; Multi-Chip Solution; Dimension:12 mm x 15 mm x 1.6 mm; Main Parameters: Luminous Flux, Forward Voltage , Chromaticity and Color Rendering Index; RoHS compliant; Energy Star / ANSI Compliant Binning Structure; Typical Viewing Angle: 115° Location/Remarks: Fixtures to be located in Dwelling unit Bathrooms		10 WATTS	120 V	Fixtures shall be controlled by: LEVITON DECORA DSM10-1LZ Universal Decora Dimmable LED, Rocker-Slide Dimmer, 450W-120VAC Dimmable LED Single Pole or 3-Way White	LUMINAIRE: LBL VERTURA 24 BA867SCLED830 SATIN NICKEL
L8		Description: Surface wall Sconce Lamp: (1)28 watt 2000 lumen 80 CRI 3000K LED module - EAHP1215WBR [EVERLIGHT] Optics/Features: Modern technology meets architectural form in this sophisticated and versatile ceiling light fixture. Riffing on the concept of an elongated 'V', the sleek aluminum body of the Vantra ceiling light from LBL Lighting also serves as the heat sink for the twin LED light guide panels. These visually floating light panels create a unique sense of wonder and offer a choice of outputs including 100% forward or direct/indirect light distribution Ceiling or wall mount. When mounted on the wall, mounts vertically or horizontally. LM-80 Certified; High Power COB & High CRI LED; Multi-Chip Solution; Dimension:12 mm x 15 mm x 1.6 mm; Main Parameters: Luminous Flux, Forward Voltage , Chromaticity and Color Rendering Index; RoHS compliant; Energy Star / ANSI Compliant Binning Structure; Typical Viewing Angle: 115° Location/Remarks: Fixtures to be located in Building corridors		28 WATTS	120 V	Fixtures to remain energized at all times	LUMINAIRE: LBL VANTRA FLUSH MOUNT FM853SCRF-LED830 SATIN NICKEL
L9	EX	Description: Exterior wall Sconce Lamp: (1)9.6 watt 840 lumen 80 CRI 2700K LED module - EAHP1215WBR [EVERLIGHT] Optics/Features: Folded metal frame inspired by modern architecture. Mounts down only. LM-80 Certified; High Power COB & High CRI LED; Multi-Chip Solution; Dimension:12 mm x 15 mm x 1.6 mm; Main Parameters: Luminous Flux, Forward Voltage , Chromaticity and Color Rendering Index; RoHS compliant; Energy Star / ANSI Compliant Binning Structure; Typical Viewing Angle: 115° Location/Remarks: Fixtures to be located at dwelling unit exterior balconies		9.6 WATTS	120 V	Fixtures shall be controlled by: LEVITON DECORA DSM10-1LZ Universal Decora Dimmable LED, Rocker-Slide Dimmer, 450W-120VAC Dimmable LED Single Pole or 3-Way White	LUMINAIRE: LBL TARA 18 OD743BZLEDW
L10		Description: Undercounter strip light Lamp: (1)10 watt 479 lumen 80 CRI 4000K LED module - 910503702218 [PHILIPS] Optics/Features: Housing Extruded aluminium, polycarbonate. White, Black, or Gray powder-coated finish. ; Lens: Polycarbonate; Fixture Connections Integral male / female connectors Temperature Ranges -4° – 122° F (-20° – 50° C) Operating -4° – 122° F (-20° – 50° C) Startup -40° – 176° F (-40° – 80° C) Storage Humidity 0 – 95%, non-condensing; Fixture Run Length Up to 50 ft (15.3 m) of fixtures in a single run, ≤ 324 W; Certification and SafetyCertification UL / cUL, F CC Class B, CE, C-Tick, ENERGY STAR (120 VAC); Environment Dry / Damp Location, IP50 Location/Remarks: Fixtures to be located under kitchen cabinetry		10 WATTS	120 V	Fixtures shall be controlled by: LEVITON DECORA DSM10-1LZ Universal Decora Dimmable LED, Rocker-Slide Dimmer, 450W-120VAC Dimmable LED Single Pole or 3-Way White	LUMINAIRE: PHILIPS eW PROFILE POWERCORE 4000K, 19.25 IN. 523-00002646
L11		Description: Common corridor pendant Lamp: (1)20 watt 1420 lumen 80 CRI 2700K LED module - 80-905 [KOLOURONE-SATCO] Optics/Features: 1-Light Flush Mounted Dome LED Ceiling Light in Polished Nickel Finish and Frosted GlassMotivation WITH 19.5W 120V 2700K 110 Degree Beam 30,000 Hour Circular LED Dimmable Light Engine - Self-contained simple plug and play design - Integrated power supply - No external driver, heat sink or drivers - Easily replaceable - Sleek, space-saving design - RU damp located listed Location/Remarks: Fixtures to be located in Building corridors		20 WATTS	120 V	Fixtures to remain energized at all times	LUMINAIRE: NUVO 62-302
L12	WP	Description: Common corridor pendant Lamp: (1)14 watt 710 lumen 80 CRI 4000K LED module - TLW10LED4KPCB-1 [PHILIPS] Optics/Features: 13.9 watt high-powered LED array; 50,000 hour life; Lightweight, compact design Sturdy die-cast aluminum housing; Architectural bronze UV resistant powder coat finish; UV stabilized polycarbonate lens/refractor UV stabilized polycarbonate front housing; Continuous silicone rubber gasket between housing and lens/cover; Energy-efficient, high-powered LED Array Provides 707 delivered lumens, LM79; Excellent heat management for long life Efficacy: 50.9 lumens per watt (LPW); CRI: 86; 4386 CCT Operating temperature: -25°C (-13°F) to 35°C (95°F) Voltage: 120V 50/60Hz; Factory-installed photocontrol; UL Listed for wet locations 5-year warranty Location/Remarks: Fixtures to be located in Building corridors		14 WATTS	120 V	Fixtures to be controlled by photocell	LUMINAIRE: PHILIPS TWILIGHTER LED WALL PAK TWL10LED4KPCB1
L13	EM	Description: Back of House surface mounted fixture Lamp: (1)28 watt 2763 lumen 80 CRI 3500K LED module - 29WLED [PHILIPS] Optics/Features: A highly efficient, visually comfortable, architecturally styled recessed LED luminaire designed with a minimalistic strategy to achieve sustainable objectives. Low profile configuration is only 3" high with sloped sides for a sleek appearance. Clean, modern design provides architectural styling compatible with virtually any area. Soft opal diffuser with large luminous area minimizes apparent brightness and provides high visual comfort perfect for a wide variety of general lighting applications like offices, schools, retail, or healthcare. Four lumen packages over a wide range provide significant application flexibility over light levels and/or luminaire spacing. A high lumen package can be used in conjunction with wide luminaire spacing to reduce luminaire quantities and overall cost while maintaining good uniformity. Directs a controlled amount of light to the higher angles in the room to balance the brightness of the surfaces and eliminate "cave effect" while creating the impression of a larger, brighter space without glare. Excellent color rendering with a CRI of 80. LEDs are an excellent source for use with controls since dimming or frequent switching does not degrade the performance or life of the source. External sensors are available for use. Surface mount design requires no plenum space. Some DuaLED luminaires are DesignLights Consortium® qualified. Please see the DLC QPL list for exact catalog numbers. (www.designlights.org/QPL) 27L and 347V are not DLC qualified. Location/Remarks: Fixtures to be located in mechanical rooms, stairs		28 WATTS	120 V	Fixtures to be controlled by motion sensor	LUMINAIRE: PHILIPS DUAL LED SURFACE DAY-BRITE ISDL27L835-4-D-UNV-DIM 1X4 FT
L14		Description: Back of House surface mounted fixture Lamp: (1)28 watt 2763 lumen 80 CRI 3500K LED module - 29WLED [PHILIPS] Optics/Features: A highly efficient, visually comfortable, architecturally styled recessed LED luminaire designed with a minimalistic strategy to achieve sustainable objectives. Low profile configuration is only 3" high with sloped sides for a sleek appearance. Clean, modern design provides architectural styling compatible with virtually any area. Soft opal diffuser with large luminous area minimizes apparent brightness and provides high visual comfort perfect for a wide variety of general lighting applications like offices, schools, retail, or healthcare. Four lumen packages over a wide range provide significant application flexibility over light levels and/or luminaire spacing. A high lumen package can be used in conjunction with wide luminaire spacing to reduce luminaire quantities and overall cost while maintaining good uniformity. Directs a controlled amount of light to the higher angles in the room to balance the brightness of the surfaces and eliminate "cave effect" while creating the impression of a larger, brighter space without glare. Excellent color rendering with a CRI of 80. LEDs are an excellent source for use with controls since dimming or frequent switching does not degrade the performance or life of the source. External sensors are available for use. Surface mount design requires no plenum space. Some DuaLED luminaires are DesignLights Consortium® qualified. Please see the DLC QPL list for exact catalog numbers. (www.designlights.org/QPL) 27L and 347V are not DLC qualified. Location/Remarks: Fixtures to be located in mechanical rooms, stairs		28 WATTS	120 V	Fixtures to remain energized at all times	LUMINAIRE: PHILIPS DUAL LED SURFACE DAY-BRITE ISDL27L835-4-D-UNV-DIM 1X4 FT
L15	EX	Description: Exterior wall Sconce Lamp: (1)9.6 watt 840 lumen 80 CRI 2700K LED module - EAHP1215WBR [EVERLIGHT] Optics/Features: Folded metal frame inspired by modern architecture. Mounts down only. LM-80 Certified; High Power COB & High CRI LED; Multi-Chip Solution; Dimension:12 mm x 15 mm x 1.6 mm; Main Parameters: Luminous Flux, Forward Voltage , Chromaticity and Color Rendering Index; RoHS compliant; Energy Star / ANSI Compliant Binning Structure; Typical Viewing Angle: 115° Location/Remarks: Fixtures to be located at dwelling unit exterior balconies		9.6 WATTS	120 V	Fixtures to be controlled by photocell	LUMINAIRE: LBL TARA 18 OD743BZLEDW

ARCHITECT:
MORALI ARCHITECTURE
505 8th AVENUE, SUITE 2202, NEW YORK, NY, 10018
TEL. 212 219 2091 E-MAIL: MSTUDIONY@AOL.COM

IMA ENGINEERING , PC
123-23 82 AVENUE, KEW GARDENS, NY, 11415 TEL: 718 268 8600

ADVANCED CLEANUP TECHNOLOGIES, INC.
110 MAIN STREET, SUITE 103, PORT WASHINGTON, NY, 11050

COPYRIGHT (C)
THESE PLAN ARE AN INSTRUMENT OF SERVICE AND ARE THE PROPERTY OF THE ARCHITECT.
This and all documents produced by this firm under this agreement shall remain the sole property of this firm and may not be used, copied, changed or distributed by the client or others without the written consent of this firm.
INFRINGEMENTS WILL BE PROSECUTED.

CONTRACTOR SHALL VERIFY ALL CONDITIONS AND MEASUREMENTS IN THE FIELD AND BE RESPONSIBLE FOR FIELD FIT AND QUANTITY OF WORK. NO ALLOWANCES SHALL BE MADE IN BEHALF OF THE CONTRACTOR FOR ANY ERROR OR NEGLECT ON HIS PART.

"THIS PLAN IS APPROVED ONLY FOR WORK INDICATED ON THE APPLICATION SPECIFICATION SHEET. ALL OTHER MATTERS SHOWN ARE NOT TO BE RELIED UPON, OR TO BE CONSIDERED AS EITHER BEING APPROVED OR IN ACCORDANCE WITH APPLICABLE CODES."

No.	Description	Date

PROJECT
36-37 31ST STREET
LONG ISLAND CITY, NY
11106

ROOF REFLECTED CEILING PLAN

SCALE : AS NOTED

SEAL: REGISTERED ARCHITECT ANTHONY J. MORALI 017683-1 STATE OF NEW YORK

Date	10.12.15
Project Number	1507
Drawn By	CI
Checked By	AM

A-408.00

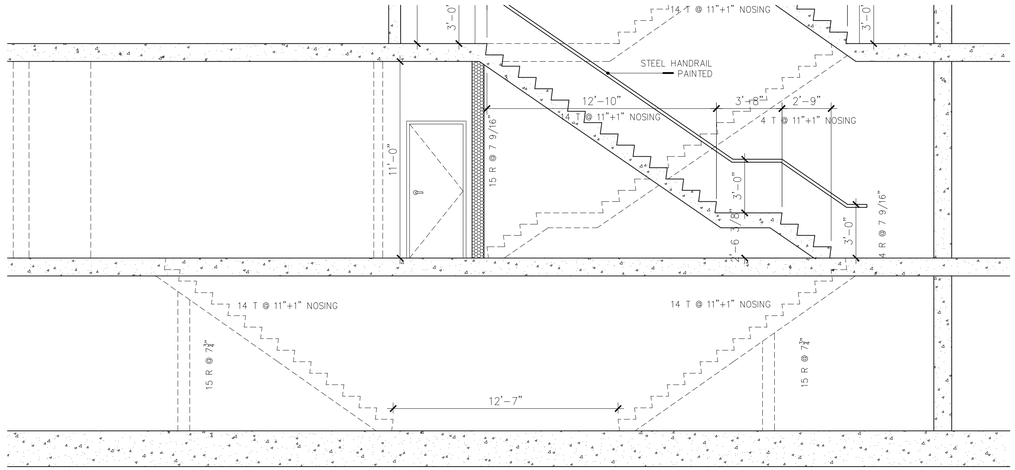

2ND FLOOR
EL. +58.02'

1ST FLOOR
EL. +46.02'

CELLAR
EL. +36.35'

3 STAIR SECTION DETAILS (CELLAR THRU 1ST FL.)
SCALE: 1/4" = 1'-0"

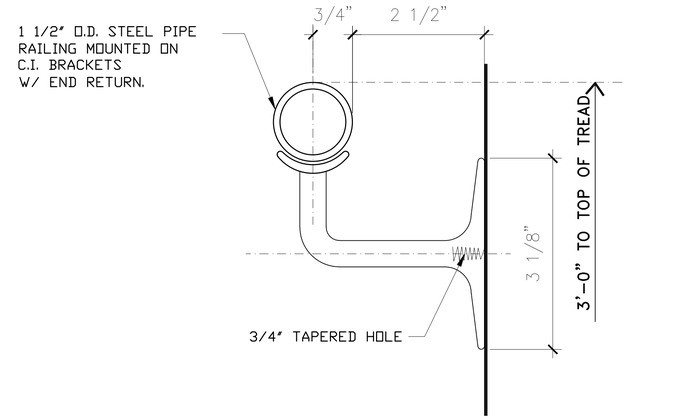

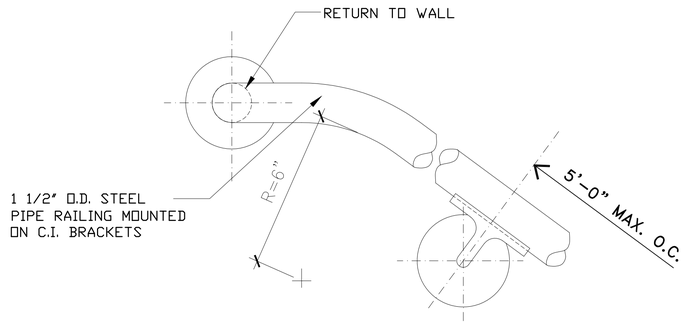

1 STAIR HANDRAIL DETAILS
N.T.S.

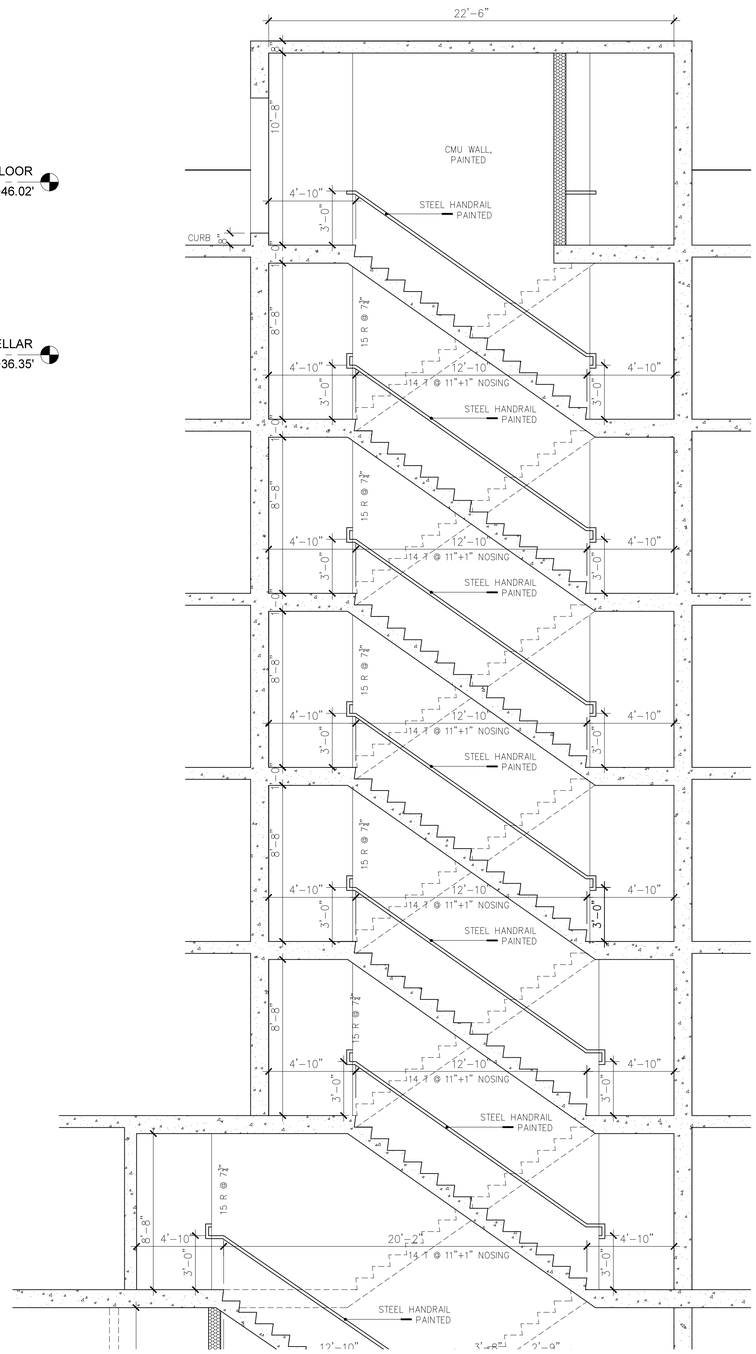

ROOF BULKHEAD

ROOF
EL. +116.04'

7TH FLOOR
EL. +106.37

6TH FLOOR
EL. +96.70'

5TH FLOOR
EL. +87.03'

4TH FLOOR
EL. +77.36'

3RD FLOOR
EL. +67.69'

2ND FLOOR
EL. +58.02'

2 STAIR SECTION DETAILS (2ND FL. THRU ROOF)
SCALE: 1/4" = 1'-0"

ARCHITECT:
MORALI ARCHITECT
505 8th AVENUE, SUITE 2202, NEW YORK, NY, 10018
TEL. 212 219 2091 E-MAIL: MSTUDIONY@AOL.COM

ENGINEERING GROUP ASSOCIATES, PC
19 W 21ST STREET RM 1103 NY, NY, 10010 TEL: 212 982 1410

IMA ENGINEERING , PC
123-23 82 AVENUE, KEW GARDENS, NY, 11415 TEL: 718 268 8600

ADVANCED CLEANUP TECHNOLOGIES, INC.
110 MAIN STREET, SUITE 103, PORT WASHINGTON, NY, 11050

COPYRIGHT (C)
THESE PLAN ARE AN INSTRUMENT OF SERVICE AND ARE THE PROPERTY OF THE ARCHITECT.
This and all documents produced by this firm under this agreement shall remain the sole property of this firm and may not be used, copied, changed or distributed by the client or others without the written consent of this firm.
INFRINGEMENTS WILL BE PROSECUTED.

CONTRACTOR SHALL VERIFY ALL CONDITIONS AND MEASUREMENTS IN THE FIELD AND BE RESPONSIBLE FOR FIELD FIT AND QUANTITY OF WORK. NO ALLOWANCES SHALL BE MADE IN BEHALF OF THE CONTRACTOR FOR ANY ERROR OR NEGLECT ON HIS PART.

"THIS PLAN IS APPROVED ONLY FOR WORK INDICATED ON THE APPLICATION SPECIFICATION SHEET. ALL OTHER MATTERS SHOWN ARE NOT TO BE RELIED UPON, OR TO BE CONSIDERED AS EITHER BEING APPROVED OR IN ACCORDANCE WITH APPLICABLE CODES."

No.	Description	Date

PROJECT
36-33 31ST STREET
LONG ISLAND CITY, NY
11106

STAIR DETAILS

SCALE : AS NOTED

SEAL

Date	09.17.15
Project Number	1507
Drawn By	CI
Checked By	AM

A-500.00

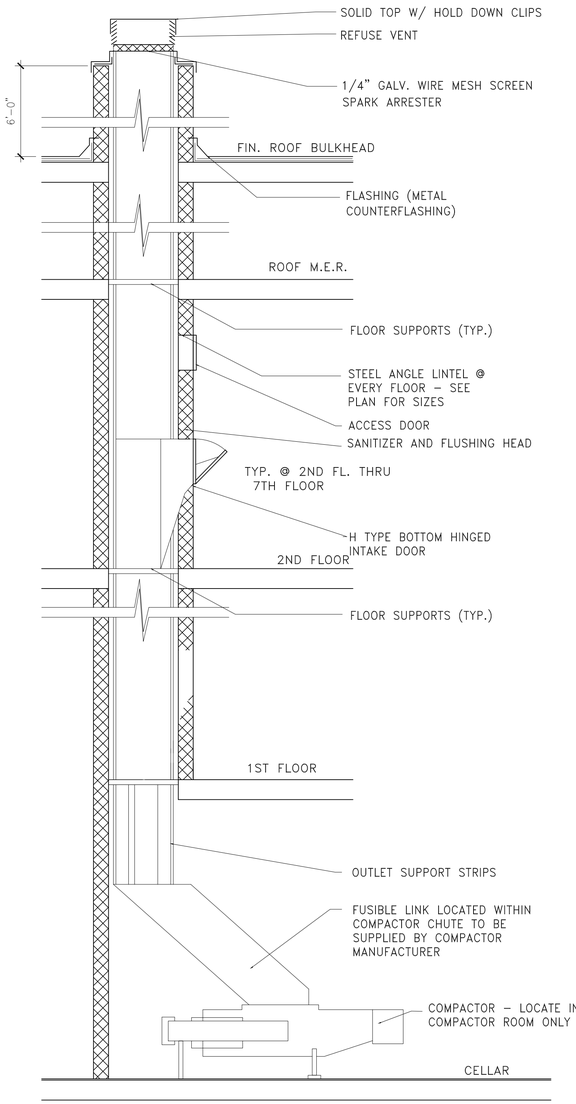

1 SECTION DETAIL OF REFUSE CHUTE
N.T.S.

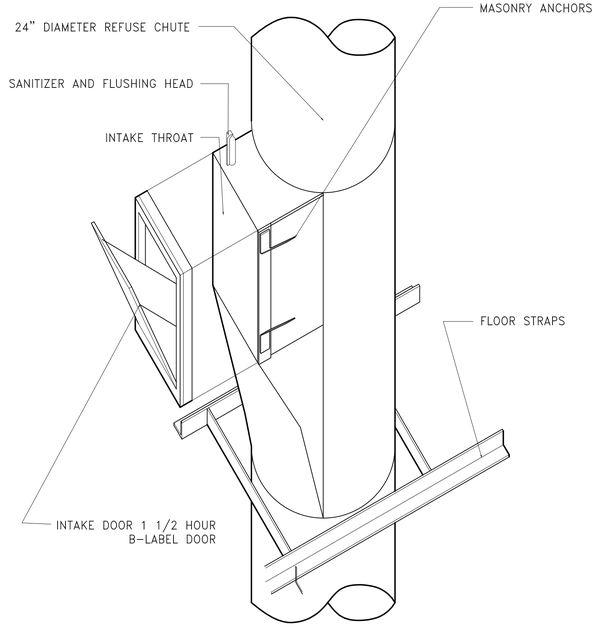

2 AXONOMETRIC DIAGRAM OF REFUSE CHUTE
N.T.S.

NOTES:

1. AT EACH END OF LIGHT FIXTURE AN INTERLOCKING CROSS "T" OR LOCKING BAR MUST BE USED.

2.THE TOTAL WEIGHT OF LIGHT FIXTURE AND OTHER EQUIPMENT AND CEILING MATERIAL SUPPORTED BY THE MAIN BEAM MUST NOT EXCEED THE ALLOWABLE DEFLECTION OF 1/360 OF IT'S SPAN. DEFLECTION DATA MUST BE FURNISHED AND CERTIFIED BY THE MANUFACTURER.

3. SURFACE OR PENDANT FIXTURES MUST BE INDEPENDENTLY SUPPORTED FROM 1 1/2" BLACK IRON OR FROM FLOOR ROOF CONSTRUCTION.

4. 5/8" PROPRIETARY TYPE X WALLBOARD OR VENEER BASE APPLIED AT RIGHT ANGLES TO STEEL FURRING CHANNEL WITH 1" TYPE S DRYWALL SCREWS SPACED 12" O.C. AND LOCATED A MINIMUM OF 1 1/2" FROM EDGES AND END JOISTS.

5. SYSTEM TO COMPLY WITH BUILDING CODE R.S. 5.16.

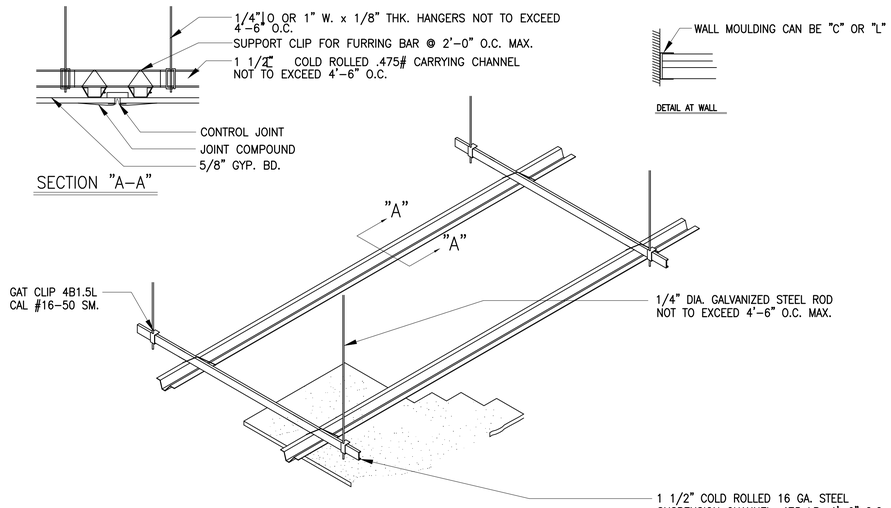

5.3.2 MAXIMUM FIXTURE WEIGHTS - FIXTURES EXCEEDING 80 LBS. IN WEIGHT SHALL BE SUPPORTED INDEPENDENT OF CEILING SUSPENSION SYSTEM. FIXTURES WEIGHING 80 LBS. OR LESS MAY BE SUPPORTED FROM THE CARRYING CHANNELS. FIXTURES WEIGHING 50 LBS. OR LESS MAY BE SUPPORTED FROM THE MAIN RUNNERS.

3 DETAIL AND NOTES OF SUSPENDED GYP. BD. CEILING SYSTEM
N.T.S.

NOTES:

1. AT EACH END OF LIGHT FIXTURE AN INTERLOCKING CROSS "T" OR LOCKING BAR MUST BE USED.

2.THE TOTAL WEIGHT OF LIGHT FIXTURE AND OTHER EQUIPMENT AND CEILING MATERIAL SUPPORTED BY THE MAIN BEAM MUST NOT EXCEED THE ALLOWABLE DEFLECTION OF 1/360 OF IT'S SPAN. DEFLECTION DATA MUST BE FURNISHED AND CERTIFIED BY THE MANUFACTURER.

3. SURFACE OR PENDANT FIXTURES MUST BE INDEPENDENTLY SUPPORTED FROM 1 1/2" BLACK IRON OR FROM FLOOR ROOF CONSTRUCTION.

4. LAY IN TILES TO BE 5/8" THICK MINERAL FIBER ACOUSTICAL TILE B.S.A. CAL # 727-62 SM. WASHABLE TYPE.

5. SYSTEM TO COMPLY WITH BUILDING CODE R.S. 5.16.

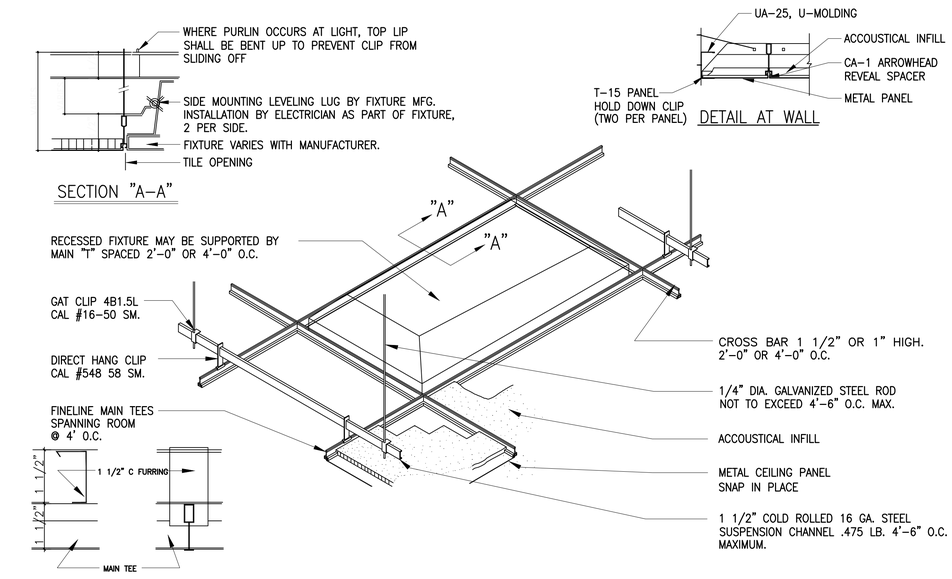

4 DETAIL AND NOTES OF EXPOSED GRID CEILING SYSTEM
N.T.S.

ARCHITECT:
MORALI ARCHITECT
505 8th AVENUE, SUITE 2202, NEW YORK, NY, 10018
TEL. 212 219 2091 E-MAIL: MSTUDIONY@AOL.COM

ENGINEERING GROUP ASSOCIATES, PC
19 W 21ST STREET RM 1103 NY, NY, 10010 TEL: 212 982 1410

IMA ENGINEERING , PC
123-23 82 AVENUE, KEW GARDENS, NY, 11415 TEL: 718 268 8600

ADVANCED CLEANUP TECHNOLOGIES, INC.
110 MAIN STREET, SUITE 103, PORT WASHINGTON, NY, 11050

COPYRIGHT (C)
THESE PLAN ARE AN INSTRUMENT OF SERVICE AND ARE THE PROPERTY OF THE ARCHITECT.
This and all documents produced by this firm under this agreement shall remain the sole property of this firm and may not be used, copied, changed or distributed by the client or others without the written consent of this firm.
INFRINGEMENTS WILL BE PROSECUTED.

CONTRACTOR SHALL VERIFY ALL CONDITIONS AND MEASUREMENTS IN THE FIELD AND BE RESPONSIBLE FOR FIELD FIT AND QUANTITY OF WORK. NO ALLOWANCES SHALL BE MADE IN BEHALF OF THE CONTRACTOR FOR ANY ERROR OR NEGLECT ON HIS PART.

"THIS PLAN IS APPROVED ONLY FOR WORK INDICATED ON THE APPLICATION SPECIFICATION SHEET, ALL OTHER MATTERS SHOWN ARE NOT TO BE RELIED UPON, OR TO BE CONSIDERED AS EITHER BEING APPROVED OR IN ACCORDANCE WITH APPLICABLE CODES."

No.	Description	Date

PROJECT
36-33 31ST STREET
LONG ISLAND CITY, NY
11106

MISCELLANEOUS DETAILS

SCALE : AS NOTED

SEAL

Date	09.17.15
Project Number	1507
Drawn By	CI
Checked By	AM

A-503.00

DOOR	LOCATION		DOOR							FRAME				SADDLE		FIRE RATE	HARD WARE	NOTE
	FLOOR	DESCRIPTION	TYPE	QUANTITY	MAT'L	FINISH	SIZE			TYPE		MAT'L	FINISH	MAT'L	TYPE			
							W	H	TH	JAMB	HEAD							
4	CELLAR	STAIR A / STAIR C	4	2	H.M.	PAINT	3'-0"	7'-6"	1 3/4"	J-1	H-1	H.M.	PAINT	STONE	1	90MIN	B	
7	CELLAR	WATER SERVICES / ELECTRICAL / ELEVATOR RM.	7	3	H.M.	PAINT	5'-0"	7'-6"	1 3/4"	J-4	H-4	H.M.	PAINT	METAL	4	90MIN	D	
1	1 FL.	RESIDENTIAL LOBBY	1	1	ALUM/GLASS	PAINT	6'-0"	9'-9"	1 3/4"			ALUM.	PAINT	STONE	9		TBD	EXTERIOR DOOR
2	1 FL.	STAIR EXITS / COMMERCIAL EXIT / VESTIBULE	2	4	ALUM/GLASS	PAINT	3'-0"	9'-9"	1 3/4"			ALUM.	PAINT	METAL	11		TBD	EXTERIOR DOOR
3	1 FL.	PARKING	3	1	METAL	PAINT	11'-0"	10'-0"	2"			ALUM.	PAINT	–	–			EXTERIOR DOOR INSULATED RIBBED STEEL DOOR, MANUFACTURER CLOPAY, MODEL 520S, SECTION THICKNESS 2", EXT. SKIN PATTERN: MINOR & DEEP RIBS, EXT. STEEL GAUGE: 20 GAUGE, R VALUE 6.6.
4	1 FL.	STAIR A/STAIR B/VESTIBULE/RESIDENTIAL LOBBY	4	3	H.M.	PAINT	3'-0"	7'-6"	1 3/4"	J-1	H-1	H.M.	PAINT	STONE	1	90MIN	B	
5	1 FL.	COMMERCIAL SPACE	5	1	ALUM/GLASS	PAINT	7'-0"	9'-9"	1 3/4"			ALUM.	PAINT	STONE	9		TBD	EXTERIOR DOOR
6	1 FL.	STORAGE / TOILETS / COMPACTOR ROOM	6	4	H.M.	PAINT	3'-0"	7'-6"	1 3/4"	J-4	H-4	H.M.	PAINT	METAL	4	90MIN	D	
4	2 FL.	STAIR A / STAIR B / STAIR C / VESTIBULE	4	5	H.M.	PAINT	3'-0"	7'-6"	1 3/4"	J-1	H-1	H.M.	PAINT	STONE	1	90MIN	B	
6	2 FL.	REFUSE ROOM / LAUNDRY ROOM / TOILET	6	3	H.M.	PAINT	3'-0"	7'-6"	1 3/4"	J-4	H-4	H.M.	PAINT	REFUSE: STONE ELECTRICAL: STONE	REFUSE: 3 ELECTRICAL: 12	90MIN	D	
8	2 FL.	HALLWAY X 2 (UNIT ENTRY)	8	2	H.M.	PAINT	3'-0"	7'-6"	1 3/4"	J-1	H-1	H.M.	PAINT	STONE	5	90MIN	A	FPSC DOOR
10	2 FL.	BEDROOM X 2 / BATHROOM X 2 / CLOSET X 2	10	6	WOOD	PAINT	3'-0"	7'-6"	1 3/4"	J-2	H-2	WOOD	PAINT	BATHROOMS: STONE BEDROOMS: WOOD	BATHROOMS: 8 BEDROOMS: 6		E	
11	2 FL.	BEDROOM CLOSET UNIT 2A	11	1	WOOD/GLASS	PAINT	2'-6"	7'-6"	1 3/4"	J-2	H-2	WOOD	PAINT	WOOD	6		F	
12	2 FL.	LINEN CLOSET UNIT 2A	12	1	WOOD	PAINT	1'-6"	7'-6"	1 3/4"	J-2	H-2	WOOD	PAINT	WOOD	6		F	
13	2 FL.	BEDROOM CLOSET UNIT 2B	13	1	WOOD/GLASS	PAINT	4'-0"	7'-6"	1 3/4"			WOOD	PAINT	WOOD	6		TBD	WHITE SLIDING DOORS WITH FROSTED GLASS
14	2 FL.	BEDROOM CLOSET UNIT 2B	14	1	WOOD/GLASS	PAINT	5'-0"	7'-6"	1 3/4"			WOOD	PAINT	WOOD	6		TBD	WHITE SLIDING DOORS WITH FROSTED GLASS
4	3-7 FL.	STAIR A / STAIR B	4	2 X 5 = 10	H.M.	PAINT	3'-0"	7'-6"	1 3/4"	J-1	H-1	H.M.	PAINT	STONE	1	90MIN	B	
6	3-7 FL.	REFUSE ROOM	6	1 X 5 = 5	H.M.	PAINT	3'-0"	7'-6"	1 3/4"	J-4	H-4	H.M.	PAINT	REFUSE: STONE ELECTRICAL: STONE	REFUSE: 3 ELECTRICAL: 12	90MIN	D	
8	3-7 FL.	HALLWAY X 4 (UNIT ENTRY)	8	4 X 5 = 20	H.M.	PAINT	3'-0"	7'-6"	1 3/4"	J-1	H-1	H.M.	PAINT	STONE	5	90MIN	A	FPSC DOOR
10	3-7 FL.	BEDROOM X 4 / BATHROOM X 4 / CLOSET X 3	10	11 X 5 = 55	WOOD	PAINT	3'-0"	7'-6"	1 3/4"	J-2	H-2	WOOD	PAINT	BATHROOMS: STONE BEDROOMS: WOOD	BATHROOMS: 8 BEDROOMS: 6		E	
11	3-7 FL.	BEDROOM CLOSET UNIT TYPE D	11	1 X 5 = 5	WOOD/GLASS	PAINT	2'-6"	7'-6"	1 3/4"	J-2	H-2	WOOD	PAINT	WOOD	6		F	
12	3-7 FL.	LINEN CLOSET UNIT TYPES A & D	12	2 X 5 = 10	WOOD	PAINT	1'-6"	7'-6"	1 3/4"	J-2	H-2	WOOD	PAINT	WOOD	6		F	
13	3-7 FL.	BEDROOM & ENTRY CLOSET UNIT TYPE B	13	2 X 5 = 10	WOOD/GLASS	PAINT	4'-0"	7'-6"	1 3/4"			WOOD	PAINT	WOOD	6		TBD	WHITE SLIDING DOORS WITH FROSTED GLASS
15	3-7 FL.	ENTRY CLOSET UNIT TYPE C	15	1 X 5 = 5	WOOD	PAINT	2'-0"	7'-6"	1 3/4"	J-2	H-2	WOOD	PAINT	WOOD	6		F	
16	3-7 FL.	BEDROOM CLOSET UNIT TYPES A & C	16	2 X 5 = 10	WOOD/GLASS	PAINT	6'-0"	7'-6"	1 3/4"			WOOD	PAINT	WOOD	6		TBD	WHITE SLIDING DOORS WITH FROSTED GLASS
4	ROOF	STAIR A / STAIR B	4	2	H.M.	PAINT	3'-0"	7'-6"	1 3/4"	J-7/J-8	H-7/H-8	H.M.	PAINT	METAL	7	90MIN	B	EXTERIOR DOOR
6	ROOF	ELEVATOR VESTIBULE / MECHANICAL ROOM	6	3	H.M.	PAINT	3'-0"	7'-6"	1 3/4"	J-1/J-4	H-1/H-4	H.M.	PAINT	METAL	7	90MIN	D	EXTERIOR DOOR

ARCHITECT:
MORALI ARCHITECT
505 8th AVENUE, SUITE 2202, NEW YORK, NY, 10018
TEL. 212 219 2091 E-MAIL: MSTUDIONY@AOL.COM

ENGINEERING GROUP ASSOCIATES, PC
19 W 21ST STREET RM 1103 NY, NY, 10010 TEL: 212 982 1410

IMA ENGINEERING , PC
123-23 82 AVENUE, KEW GARDENS, NY, 11415 TEL: 718 268 8600

ADVANCED CLEANUP TECHNOLOGIES, INC.
110 MAIN STREET, SUITE 103, PORT WASHINGTON, NY, 11050

COPYRIGHT (C)
THESE PLAN ARE AN INSTRUMENT OF SERVICE AND ARE THE PROPERTY OF THE ARCHITECT.
This and all documents produced by this firm under this agreement shall remain the sole property of this firm and may not be used, copied, changed or distributed by the client or others without the written consent of this firm.
INFRINGEMENTS WILL BE PROSECUTED.

CONTRACTOR SHALL VERIFY ALL CONDITIONS AND MEASUREMENTS IN THE FIELD AND BE RESPONSIBLE FOR FIELD FIT AND QUANTITY OF WORK. NO ALLOWANCES SHALL BE MADE IN BEHALF OF THE CONTRACTOR FOR ANY ERROR OR NEGLECT ON HIS PART.

"THIS PLAN IS APPROVED ONLY FOR WORK INDICATED ON THE APPLICATION SPECIFICATION SHEET. ALL OTHER MATTERS SHOWN ARE NOT TO BE RELIED UPON, OR TO BE CONSIDERED AS EITHER BEING APPROVED OR IN ACCORDANCE WITH APPLICABLE CODES."

No.	Description	Date

PROJECT

36-33 31ST STREET
LONG ISLAND CITY, NY
11106

DOOR SCHEDULE

SCALE : AS NOTED

SEAL

REGISTERED ARCHITECT ANTHONY J. MORALI 026983-1 STATE OF NEW YORK

Date	09.17.15
Project Number	1507
Drawn By	CI
Checked By	AM

A-700.00

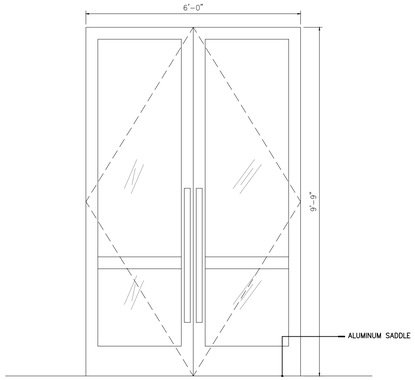

1

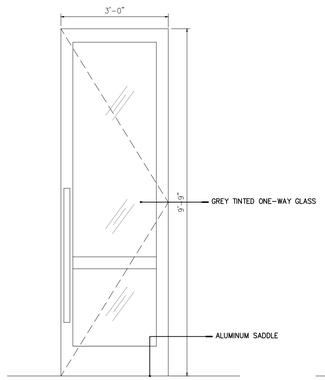

2

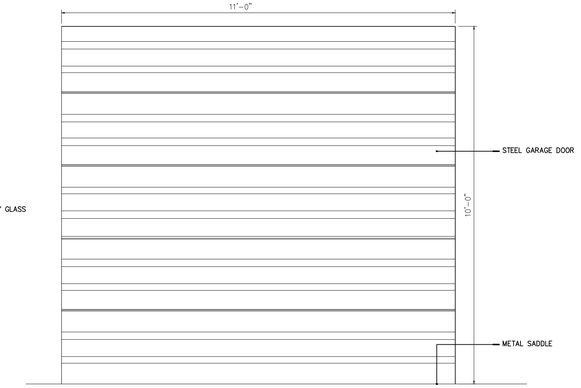

3

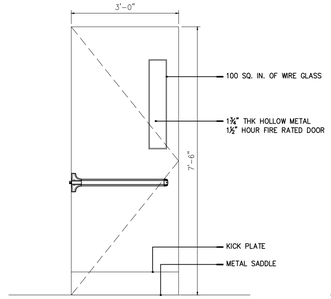

4

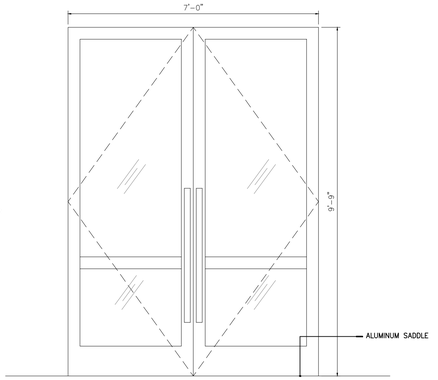

5

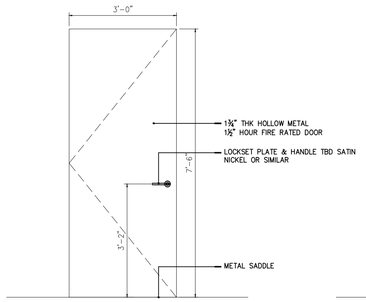

6

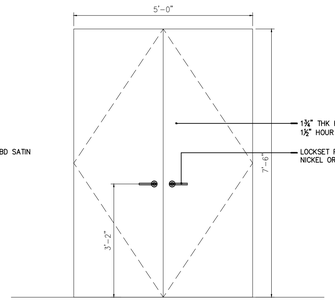

7

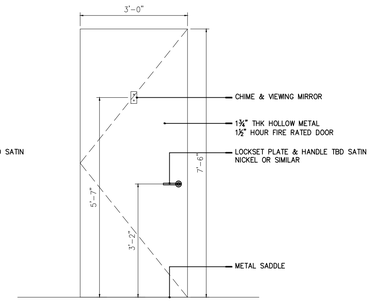

8

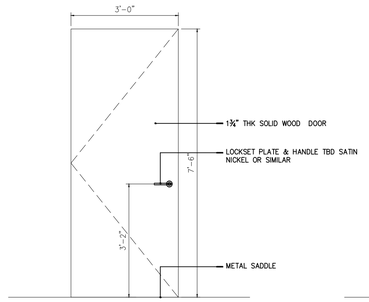

10

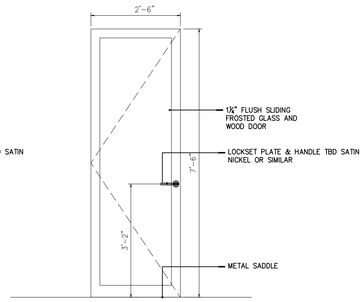

11

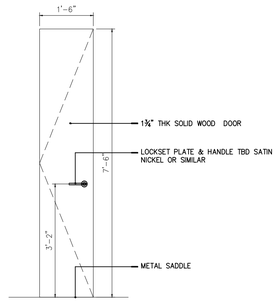

12

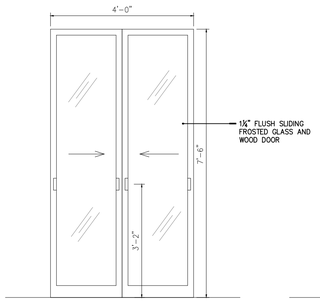

13

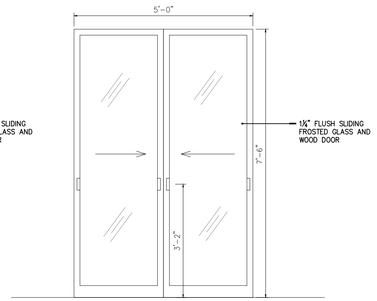

14

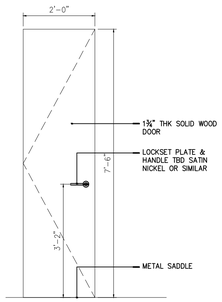

15

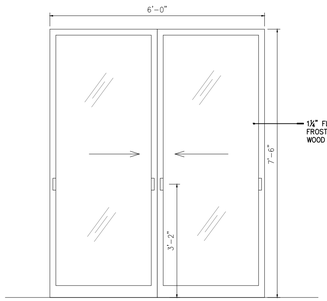

16

ARCHITECT:
MORALI ARCHITECT
505 8th AVENUE, SUITE 2202, NEW YORK, NY, 10018
TEL. 212 219 2091 E-MAIL: MSTUDIONY@AOL.COM

ENGINEERING GROUP ASSOCIATES, PC
19 W 21ST STREET RM 1103 NY, NY, 10010 TEL: 212 982 1410

IMA ENGINEERING , PC
123-23 82 AVENUE, KEW GARDENS, NY, 11415 TEL: 718 268 8600

ADVANCED CLEANUP TECHNOLOGIES, INC.
110 MAIN STREET, SUITE 103, PORT WASHINGTON, NY, 11050

COPYRIGHT (C)
THESE PLAN ARE AN INSTRUMENT OF SERVICE AND ARE THE PROPERTY OF THE ARCHITECT.
This and all documents produced by this firm under this agreement shall remain the sole property of this firm and may not be used, copied, changed or distributed by the client or others without the written consent of this firm.
INFRINGEMENTS WILL BE PROSECUTED.

CONTRACTOR SHALL VERIFY ALL CONDITIONS AND MEASUREMENTS IN THE FIELD AND BE RESPONSIBLE FOR FIELD FIT AND QUANTITY OF WORK. NO ALLOWANCES SHALL BE MADE IN BEHALF OF THE CONTRACTOR FOR ANY ERROR OR NEGLECT ON HIS PART.

"THIS PLAN IS APPROVED ONLY FOR WORK INDICATED ON THE APPLICATION SPECIFICATION SHEET. ALL OTHER MATTERS SHOWN ARE NOT TO BE RELIED UPON, OR TO BE CONSIDERED AS EITHER BEING APPROVED OR IN ACCORDANCE WITH APPLICABLE CODES."

No.	Description	Date

PROJECT

36-33 31ST STREET
LONG ISLAND CITY, NY
11106

DOOR DETAILS

SCALE : 1/2" = 1'-0"

SEAL

REGISTERED ARCHITECT ANTHONY J. MORALI 026883-1 STATE OF NEW YORK

Date	09.17.15
Project Number	1507
Drawn By	CI
Checked By	AM

A-701.00

HARDWARE SCHEDULE			
	Door Type 8 - Apartment Entrance Doors	Solid Wood Slate Door (paint grade)	
	HW Set # A		
	1-4.5 PR Ea	Spring hinges	Mckinney Spring Hinge # 1502 plated steel
	1 Ea	Lock/latch	Corbin Russwin ML2024
	1 Ea	Lock Trim	Corbin Russwin ML2000 L escutcheon satin stainless steel
	1 Ea	Lever/Bar	Corbin Russwin Museo Marc lever #131 - C6 lockset satin stainless steel
	1 Ea	Wall Stop	Rockwood wall stop # 400
	1 Ea	Stone Saddle	Marble Saddle to match color floor
	1 Ea	Weatherstripping	Pemko 18061CNB door sweep
	1 Ea	Door Viewer	National Manufacturer - N330712 Door viewer
	1 Ea	Door Number (Correspond to floor and unit)	FSB 4005 aluminum door number
	Door Type 4 - Egress Doors	Narrow Lite Metal Door	
	HW Set # B		
	1-4.5 PR Ea	Butt hinges, BB, NRP	Mckinney TA2714 4.5 x 4.5
	1 Ea	Lock/latch	Corbin Russwin ML2010
	1 Ea	Lever/Bar	Corbin Russwin ED5000 Pushbar with Museo Marc lever #131 - C6 lockset satin stainless steel
	1 Ea	Closer	Norton 7500 door closer Aluminum
	1 Ea	Kickplate	Rockwood door plate K1050-6 US32316
	1 Ea	Stone Saddle	Stone Saddle to match color floor
	1 Ea	Weatherstripping	Pemko 18061CNB door dweep
	1 Ea	Wall Stop	Rockwood wall stop # 400
	Door Types 7 - Corridor Doors	Hollow Metal, flush or equal	
	HW Set # C		
	1-4.5 PR Ea	Butt hinges	Mckinney TA2714 4.5 x 4.5
	1 Ea	Lock/latch	Corbin Russwin ML2010
	1 Ea	Lever/Bar	Corbin Russwin Museo Marc lever #131 - C6 lockset satin stainless steel
	1 Ea	Stone Saddle	Stone Saddle to match tile floor
	Door Type 6 - Trash Room Door	Hollow Metal, flush or equal	
	HW Set # D		
	1-4.5 PR Ea	Spring hinges	Mckinney Spring Hinge # 1502 plated steel
	1 Ea	Lock/latch	Corbin Russwin ML2055
	1 Ea	Lever/Bar	Corbin Russwin Museo Marc lever #131 - C6 lockset satin stainless steel
	1 Ea	Stone Saddle	Stone Saddle to match tile floor
	Door Type 10 - Bedrooms and Bathrooms	Solid Wood Door (paint grade)	
	HW Set # E		
	1-3.5 PR Ea	Butt hinges	Mckinney TA2714 3.5 x 3.5
	1 Ea	Lock/latch	Corbin Russwin ML2020
	1 Ea	Lever/Bar	Corbin Russwin Museo Marc lever #131 - C6 lockset satin stainless steel
	1 Ea	Lock Trim	Corbin Russwin ML2000 T-rose
	1 Ea	Wood Saddle (BED) / Stone Saddle (BATH)	Frost King E/O 3-1/2 in. x 36 in. Saddle Threshold / Stone Saddle to match tile floor
	1 Ea	Wall Stop	Rockwood wall stop # 400
	Door Type 11, 12 & 15- Closet Doors	Solid Wood Door (paint grade)	
	HW Set # F		
	2- 3.5 PR Ea	Butt hinges	Mckinney TA2714 3.5 x 3.5
	1 Ea	Lock/latch	Corbin Russwin ML2010
	1 Ea	Lever/Bar	Corbin Russwin Museo Marc lever #131 - C6 lockset satin stainless steel

ARCHITECT:
MORALI ARCHITECT
505 8th AVENUE, SUITE 2202, NEW YORK, NY, 10018
TEL. 212 219 2091 E-MAIL: MSTUDIONY@AOL.COM

ENGINEERING GROUP ASSOCIATES, PC
19 W 21ST STREET RM 1103 NY, NY, 10010 TEL: 212 982 1410

IMA ENGINEERING , PC
123-23 82 AVENUE, KEW GARDENS, NY, 11415 TEL: 718 268 8600

ADVANCED CLEANUP TECHNOLOGIES, INC.
110 MAIN STREET, SUITE 103, PORT WASHINGTON, NY, 11050

COPYRIGHT (C)
THESE PLAN ARE AN INSTRUMENT OF SERVICE AND ARE THE PROPERTY OF THE ARCHITECT.
This and all documents produced by this firm under this agreement shall remain the sole property of this firm and may not be used, copied, changed or distributed by the client or others without the written consent of this firm.
INFRINGEMENTS WILL BE PROSECUTED.

CONTRACTOR SHALL VERIFY ALL CONDITIONS AND MEASUREMENTS IN THE FIELD AND BE RESPONSIBLE FOR FIELD FIT AND QUANTITY OF WORK. NO ALLOWANCES SHALL BE MADE IN BEHALF OF THE CONTRACTOR FOR ANY ERROR OR NEGLECT ON HIS PART.

"THIS PLAN IS APPROVED ONLY FOR WORK INDICATED ON THE APPLICATION SPECIFICATION SHEET. ALL OTHER MATTERS SHOWN ARE NOT TO BE RELIED UPON, OR TO BE CONSIDERED AS EITHER BEING APPROVED OR IN ACCORDANCE WITH APPLICABLE CODES."

No.	Description	Date

PROJECT
36-33 31ST STREET
LONG ISLAND CITY, NY
11106

HARDWARE SCHEDULE

SCALE : AS NOTED

SEAL
REGISTERED ARCHITECT
ANTHONY J. MORALI
STATE OF NEW YORK

Date	09.17.15
Project Number	1507
Drawn By	CI
Checked By	AM

A-702.00

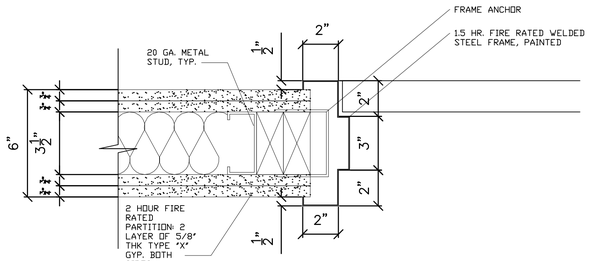

H1 J1

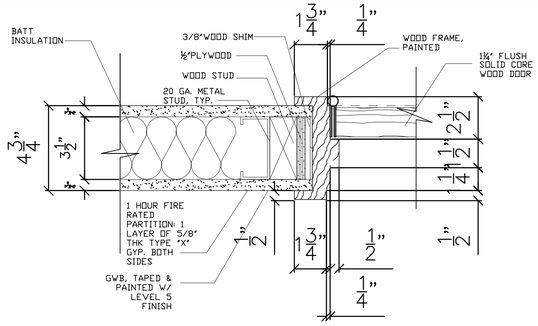

H2 J2

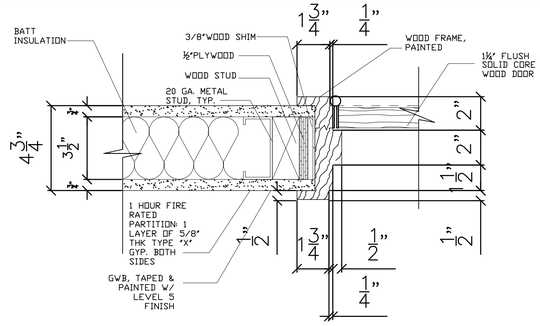

H3 J3

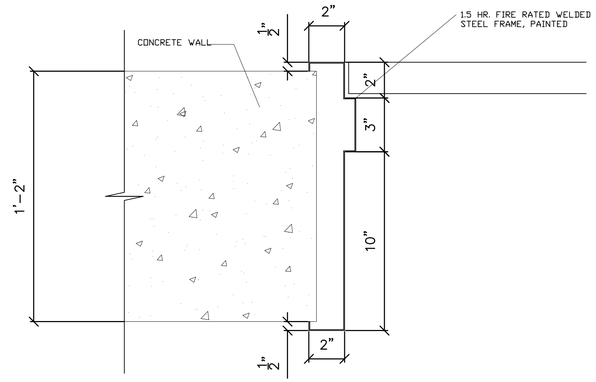

H8 J8

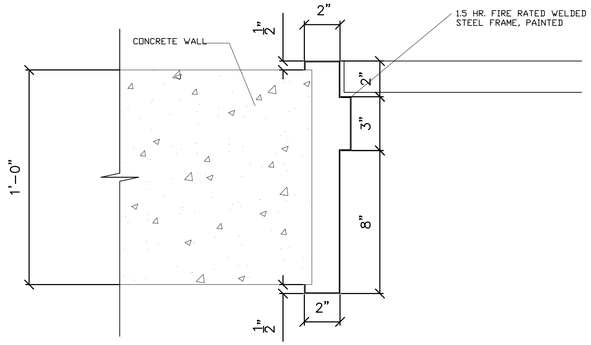

H7 J7

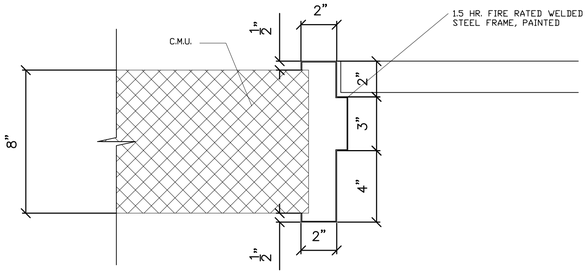

H4 J4

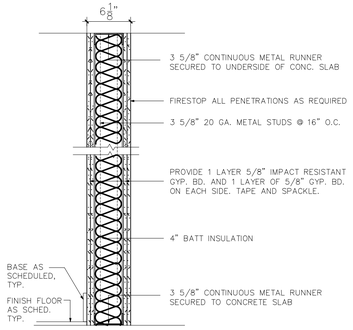

0 2-H R R A T E D PARTITION
1 - 1 / 2 " = 1 ' - 0 " BSA NO. 301 - 60 - SM

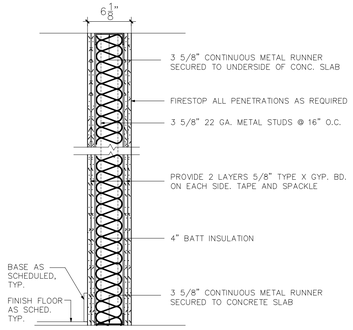

1 2-H R R A T E D PARTITION
1 - 1 / 2 " = 1 ' - 0 " BSA NO. 301 - 60 - SM

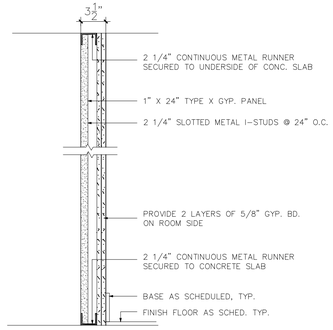

2 2-H R R A T E D SHAFT WALL
1 - 1 / 2 " = 1 ' - 0 " BSA NO. 354-76-SM

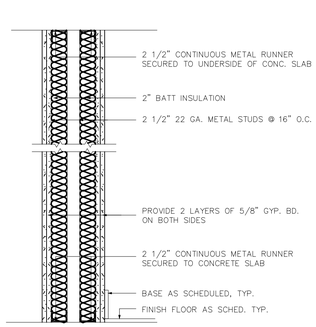

3 2-H R R A T E D INTERIOR PARTITION
1 - 1 / 2 " = 1 ' - 0 " BSA NO. 301 - 60 - SM

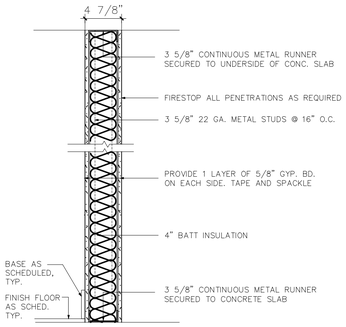

4 1-H R R A T E D PARTITION
1 - 1 / 2 " = 1 ' - 0 " BSA NO. 453 - 73 - SM

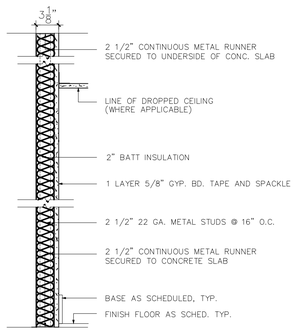

5 INTERIOR FURRING PARTITION
1 - 1 / 2 " = 1 ' - 0 "

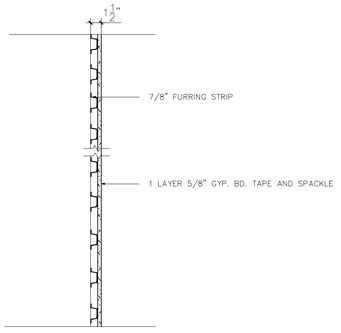

6 FURRING PARTITION
1 - 1 / 2 " = 1 ' - 0 "

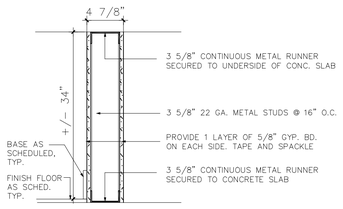

7 INTERIOR KNEE WALL
1 - 1 / 2 " = 1 ' - 0 "

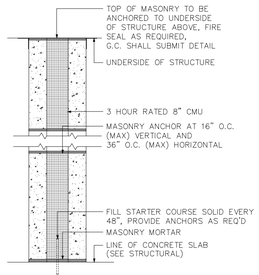

8 3-H R R A T E D 8" CMU PARTITION @ TRASH CHUTE
1 - 1 / 2 " = 1 ' - 0 "

ARCHITECT:
MORALI ARCHITECT
505 8th AVENUE, SUITE 2202, NEW YORK, NY, 10018
TEL. 212 219 2091 E-MAIL: MSTUDIONY@AOL.COM

ENGINEERING GROUP ASSOCIATES, PC
19 W 21ST STREET RM 1103 NY, NY, 10010 TEL: 212 982 1410

IMA ENGINEERING , PC
123-23 82 AVENUE, KEW GARDENS, NY, 11415 TEL: 718 268 8600

ADVANCED CLEANUP TECHNOLOGIES, INC.
110 MAIN STREET, SUITE 103, PORT WASHINGTON, NY, 11050

COPYRIGHT (C)
THESE PLAN ARE AN INSTRUMENT OF SERVICE AND ARE THE PROPERTY OF THE ARCHITECT.
This and all documents produced by this firm under this agreement shall remain the sole property of this firm and may not be used, copied, changed or distributed by the client or others without the written consent of this firm.
INFRINGEMENTS WILL BE PROSECUTED.

CONTRACTOR SHALL VERIFY ALL CONDITIONS AND MEASUREMENTS IN THE FIELD AND BE RESPONSIBLE FOR FIELD FIT AND QUANTITY OF WORK. NO ALLOWANCES SHALL BE MADE IN BEHALF OF THE CONTRACTOR FOR ANY ERROR OR NEGLECT ON HIS PART.

"THIS PLAN IS APPROVED ONLY FOR WORK INDICATED ON THE APPLICATION SPECIFICATION SHEET. ALL OTHER MATTERS SHOWN ARE NOT TO BE RELIED UPON, OR TO BE CONSIDERED AS EITHER BEING APPROVED OR IN ACCORDANCE WITH APPLICABLE CODES."

No.	Description	Date

PROJECT
36-33 31ST STREET
LONG ISLAND CITY, NY
11106

HEAD AND JAMB DETAILS & INTERIOR PARTITION TYPES

SCALE : AS NOTED

SEAL: REGISTERED ARCHITECT ANTHONY J. MORALI 026889-1 STATE OF NEW YORK

Date	09.17.15
Project Number	1507
Drawn By	CI
Checked By	AM

A-703.00

LOCATION		FLOOR	BASE	WALL		CEILING		REMARKS
FLOOR	LOCATION			MATERIAL	FINISH	MATERIAL	FINISH	
CELLAR	CELLAR STORAGE 001	P-6	VCB	GYP.BD/CMU/CONC.	P-3	CONC.	P-4	
CELLAR	ELEVATOR MACHINE ROOM 002	P-6	VCB	GYP.BD/CMU/CONC.	P-3	CONC.	P-4	
CELLAR	WATER SERVICES 003	P-6	VCB	GYP.BD/CMU/CONC.	P-3	CONC.	P-4	
CELLAR	ELECTRICAL 004	P-6	VCB	GYP.BD/CMU/CONC.	P-3	CONC.	P-4	
1 FL.	RESIDENTIAL LOBBY 101	ST TILE-4	ST BASE-2	GYP.BD/CMU/CONC.	WC-1	GYP.BD	P-4	
1 FL.	STAIR A	P-5		GYP.BD/CMU/CONC.	P-3	CONC.	P-4	
1 FL.	STAIR B	P-5		GYP.BD/CMU/CONC.	P-3	CONC.	P-4	
1 FL.	OFFICE LOBBY 102	ST TILE-4	ST BASE-2	GYP.BD/CMU/CONC.	P-2	GYP.BD	P-4	
1 FL.	TOILET 103	ST TILE-1	ST BASE-1	GYP.BD	ST TILE-2/P-8	GYP.BD	P-8	WATER RESISTANT GYP.BD.
1 FL.	VESTIBULE 104	P-5		GYP.BD/CMU/CONC.	P-3	CONC.	P-4	
1 FL.	COMPACTOR 105	ST TILE-1	ST BASE-1	CMU/CONC.	ST TILE-2/P-8	CONC.	P-4	
1 FL.	STORAGE 106	P-6	VCB	GYP.BD/CMU/CONC.	P-3	CONC.	P-4	
1 FL.	TOILET 107	ST TILE-1	ST BASE-1	GYP.BD	ST TILE-2/P-8	GYP.BD	P-8	WATER RESISTANT GYP.BD.
1 FL.	STAIR C	P-5		GYP.BD/CMU/CONC.	P-3	CONC.	P-4	
2 FL.	HALLWAY 201	ST TILE-4	ST BASE-2	GYP.BD/CMU/CONC.	WC-1	GYP.BD	P-4	
2 FL.	STAIR B	P-5		GYP.BD/CMU/CONC.	P-3	CONC.	P-4	
2 FL.	STAIR A	P-5		GYP.BD/CMU/CONC.	P-3	CONC.	P-4	
2 FL.	VESTIBULE 202	P-5		GYP.BD/CMU/CONC.	P-3	CONC.	P-4	
2 FL.	REFUSE ROOM 203	ST TILE-1	ST BASE-1	GYP.BD/CMU/CONC.	P-3	CONC.	P-4	
2 FL.	LAUNDRY 204	P-6	VCB	GYP.BD/CMU	ST TILE-2/P-8	CONC.	P-8	
2 FL.	TOILET 205	ST TILE-1	ST BASE-1	GYP.BD	ST TILE-2/P-8	GYP.BD	P-8	WATER RESISTANT GYP.BD.
2 FL.	OFFICE 206	C-1	WD BASE-2	GYP.BD/CMU	P-1	GYP.BD	P-2	
2 FL.	LIVING	WD-1	WD BASE-1	GYP.BD	P-1	GYP.BD/CONC.	P-2	
2 FL.	KITCHENETTE	WD-1	WD BASE-1	GYP.BD	ST TILE-2/P-8	GYP.BD	P-8	
2 FL.	BATHROOM	ST TILE-1	ST BASE-1	GYP.BD	ST TILE-2/P-8	GYP.BD	P-8	WATER RESISTANT GYP.BD.
2 FL.	BEDROOM	WD-1	WD BASE-1	GYP.BD	P-1	GYP.BD/CONC.	P-2	
2 FL.	CLOSET	WD-1	WD BASE-1	GYP.BD	P-1	GYP.BD	P-2	
2 FL.	BALCONY/TERRACE	ST TILE-5		CONC./GLASS				
2 FL.	STAIR C	P-5		GYP.BD/CMU/CONC.	P-3	CONC.	P-4	
3-7 FL.	HALLWAY	C-1	WD BASE-2	GYP.BD/CMU/CONC.	WC-2 / WC-3	GYP.BD	P-4	
3-7 FL.	STAIR B	P-5		GYP.BD/CMU/CONC.	P-3	CONC.	P-4	
3-7 FL.	STAIR A	P-5		GYP.BD/CMU/CONC.	P-3	CONC.	P-4	
3-7 FL.	REFUSE ROOM	ST TILE-1	ST BASE-1	GYP.BD/CMU/CONC.	P-3	CONC.	P-4	
3-7 FL.	LIVING	WD-1	WD BASE-1	GYP.BD	P-1	GYP.BD/CONC.	P-2	
3-7 FL.	KITCHENETTE	WD-1	WD BASE-1	GYP.BD	ST TILE-2/P-8	GYP.BD	P-8	
3-7 FL.	BATHROOM	ST TILE-1	ST BASE-1	GYP.BD	ST TILE-2/P-8	GYP.BD	P-8	WATER RESISTANT GYP.BD.
3-7 FL.	BEDROOM	WD-1	WD BASE-1	GYP.BD	P-1	GYP.BD/CONC.	P-2	
3-7 FL.	CLOSET	WD-1	WD BASE-1	GYP.BD	P-1	GYP.BD	P-2	
3-7 FL.	BALCONY/TERRACE	ST TILE-5		CONC./GLASS				
ROOF	STAIR A	P-5		CMU/CONC.	P-3	CONC.	P-4	
ROOF	STAIR B	P-5		CMU/CONC.	P-3	CONC.	P-4	
ROOF	ELEVATOR VESTIBULE R01	P-6		CMU/CONC.	P-3	CONC.	P-4	
ROOF	MECHANICAL R02	P-6		CMU/CONC.	P-3	CONC.	P-4	

ARCHITECT:
MORALI ARCHITECT
505 8th AVENUE, SUITE 2202, NEW YORK, NY, 10018
TEL. 212 219 2091 E-MAIL: MSTUDIONY@AOL.COM

ENGINEERING GROUP ASSOCIATES, PC
19 W 21ST STREET RM 1103 NY, NY, 10010 TEL: 212 982 1410

IMA ENGINEERING , PC
123-23 82 AVENUE, KEW GARDENS, NY, 11415 TEL: 718 268 8600

ADVANCED CLEANUP TECHNOLOGIES, INC.
110 MAIN STREET, SUITE 103, PORT WASHINGTON, NY, 11050

COPYRIGHT (C)
THESE PLAN ARE AN INSTRUMENT OF SERVICE AND ARE THE PROPERTY OF THE ARCHITECT.
This and all documents produced by this firm under this agreement shall remain the sole property of this firm and may not be used, copied, changed or distributed by the client or others without the written consent of this firm.
INFRINGEMENTS WILL BE PROSECUTED.

CONTRACTOR SHALL VERIFY ALL CONDITIONS AND MEASUREMENTS IN THE FIELD AND BE RESPONSIBLE FOR FIELD FIT AND QUANTITY OF WORK. NO ALLOWANCES SHALL BE MADE IN BEHALF OF THE CONTRACTOR FOR ANY ERROR OR NEGLECT ON HIS PART.

"THIS PLAN IS APPROVED ONLY FOR WORK INDICATED ON THE APPLICATION SPECIFICATION SHEET. ALL OTHER MATTERS SHOWN ARE NOT TO BE RELIED UPON, OR TO BE CONSIDERED AS EITHER BEING APPROVED OR IN ACCORDANCE WITH APPLICABLE CODES."

No.	Description	Date

PROJECT
36-33 31ST STREET
LONG ISLAND CITY, NY
11106

FINISH SCHEDULE

SCALE : AS NOTED

SEAL
ANTHONY J. MORALI
REGISTERED ARCHITECT
STATE OF NEW YORK

Date 09.17.15
Project Number 1507
Drawn By CI
Checked By AM

A-704.00

PAINT FINISHES

NO.	TYPE	COLOR	FINISH	MANUFACTURRER	MODEL #	REMARKS
P-1	LATEX INTERIOR	ALABASTER	LOW SHEEN EGGSHELL	SHERWIN WILLIAMS	SW-7008	DOORS & TRIM WITH EGGSHELL FINISH
P-2	LATEX INTERIOR	BRIGHT WHITE	FLAT	SHERWIN WILLIAMS	SW-7007	
P-3	ACRYLIC INTERIOR	ALABASTER	SEMI GLOSS	SHERWIN WILLIAMS	PROMAR 200 ZERO VOC	
P-4	ACRYLIC INTERIOR	BRIGHT WHITE	FLAT	SHERWIN WILLIAMS	PROMAR 200 ZERO VOC	
P-5	TRAFFIC COATING	GREY		NEOGARD	PEDA GARD-LT	
P-6	EPOXY FLOORING	GREY	SEMI GLOSS	SHERWIN WILLIAMS	ARMORSEAL 650SL/RC	
P-7	TRAFFIC COATING	GREY	NON-SLIP	SIKA	SIKALASTIC 710	HEAVY DUTY FOR VEHICULAR TRAFFIC
P-8	ACRYLIC INTERIOR	SUPER WHITE	EGGSHELL	BENJAMIN MOORE	AURA - 524	

STONE & TILE

NO.	TYPE	COLOR	FINISH	MANUFACTURRER	MODEL #	REMARKS
ST TILE-1	PORCELAIN TILE	SAND		CERATILE		12" X 24" ICON ITALIAN MATTE PORCELAIN
ST TILE-2	PORCELAIN TILE	BLANCO		CERATILE		12.4 X 35.4 JAZZ (FLAT) SPAIN WALL TILE
ST TILE-4	PORCELAIN TILE	MUSK		CERATILE		6" X 40" SALVAGE ITALIAN WOOD PORCELAIN TILE
ST TILE-5	CONC. PAVER	NATURAL		HANOVER		24" X 24"
ST BASE-1	PORCELAIN TILE	SAND		CERATILE		4" BASEBOARD TO MATCH FLOOR
ST BASE-2	PORCELAIN TILE	MUSK		CERATILE		8 1/2" BASEBOARD TO MATCH FLOOR

FLOOR & BASE

NO.	TYPE	COLOR	FINISH	MANUFACTURRER	MODEL #	REMARKS
R-1	RUBBER	BLUE 25%		RUBBER FLOORING INC		$\frac{1}{2}$" X 4' X 4' INTERLOCKING RUBBER GYM TILES
WD-1	WOOD	LAKE TANA BIRCH		MAYFLOWER	10024686	$\frac{3}{8}$" X 5" HANDSCRAPED ENGINEERED HARDWOOD
WD BASE-1	WOOD	LAKE TANA BIRCH		MAYFLOWER		4" BASEBOARD TO MATCH FLOOR
WD BASE-2	WOOD	PAINTED TO MATCH WALL				$\frac{1}{2}$" X 6" W/CHAMFERED EDGE
C-1	CARPET	DARK GREY		TBD		
VCB	VINYL COVE BASE	GREY		ARMSTRONG	ARMCB6	$\frac{1}{8}$ THICK, 6" HIGH

WALL COVERING

NO.	TYPE	COLOR	FINISH	MANUFACTURRER	MODEL #	REMARKS
WC-1	FABRIC WALL COVER	TBD				
WC-2	WALL PAPER	TBD				
WC-3	VINYL TILES	CONTRACT COTTON		PORCELANOSA		91 $\frac{1}{2}$" X 30 $\frac{1}{2}$" WOVEN VINYL COVER

ARCHITECT:
MORALI ARCHITECT
505 8th AVENUE, SUITE 2202, NEW YORK, NY, 10018
TEL. 212 219 2091 E-MAIL: MSTUDIONY@AOL.COM

ENGINEERING GROUP ASSOCIATES, PC
19 W 21ST STREET RM 1103 NY, NY, 10010 TEL: 212 982 1410

IMA ENGINEERING , PC
123-23 82 AVENUE, KEW GARDENS, NY, 11415 TEL: 718 268 8600

ADVANCED CLEANUP TECHNOLOGIES, INC.
110 MAIN STREET, SUITE 103, PORT WASHINGTON, NY, 11050

COPYRIGHT (C)
THESE PLAN ARE AN INSTRUMENT OF SERVICE AND ARE THE PROPERTY OF THE ARCHITECT.
This and all documents produced by this firm under this agreement shall remain the sole property of this firm and may not be used, copied, changed or distributed by the client or others without the written consent of this firm.
INFRINGEMENTS WILL BE PROSECUTED.

CONTRACTOR SHALL VERIFY ALL CONDITIONS AND MEASUREMENTS IN THE FIELD AND BE RESPONSIBLE FOR FIELD FIT AND QUANTITY OF WORK. NO ALLOWANCES SHALL BE MADE IN BEHALF OF THE CONTRACTOR FOR ANY ERROR OR NEGLECT ON HIS PART.

"THIS PLAN IS APPROVED ONLY FOR WORK INDICATED ON THE APPLICATION SPECIFICATION SHEET. ALL OTHER MATTERS SHOWN ARE NOT TO BE RELIED UPON, OR TO BE CONSIDERED AS EITHER BEING APPROVED OR IN ACCORDANCE WITH APPLICABLE CODES."

No.	Description	Date

PROJECT
36-33 31ST STREET
LONG ISLAND CITY, NY
11106

FINISH SCHEDULE

SCALE : AS NOTED

SEAL: REGISTERED ARCHITECT ANTHONY J. MORALI STATE OF NEW YORK 031883-1

Date	09.17.15
Project Number	1507
Drawn By	CI
Checked By	AM

A-705.00

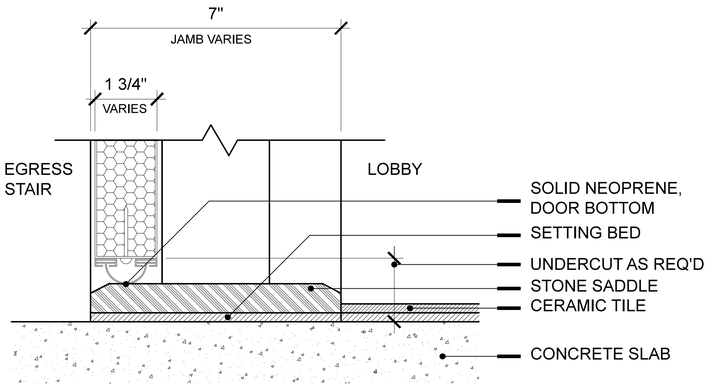

SADDLE 1 - EGRESS STAIR 01

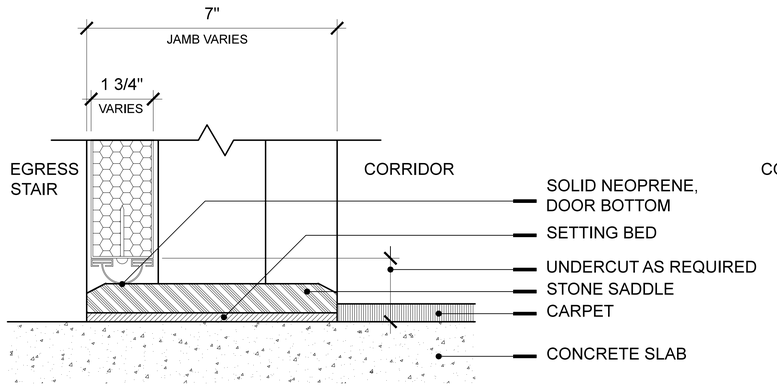

SADDLE 2 - EGRESS STAIR 02

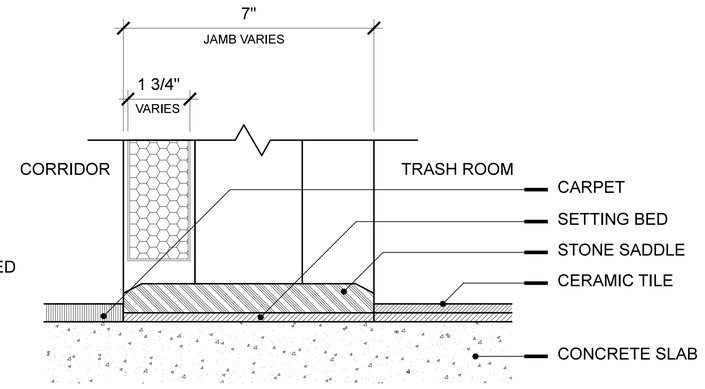

SADDLE 3 - TRASH ROOM

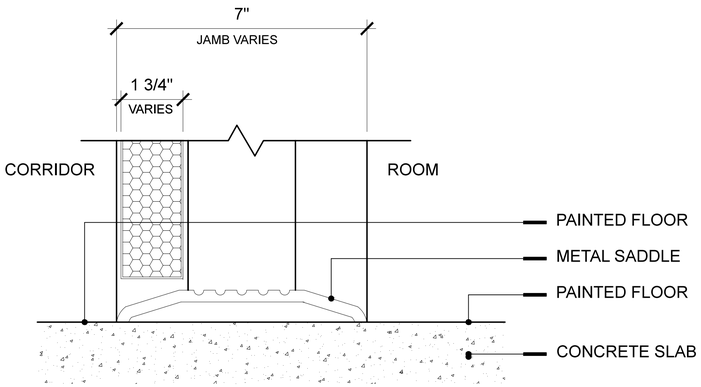

SADDLE 4 - BACK OF HOUSE ROOMS

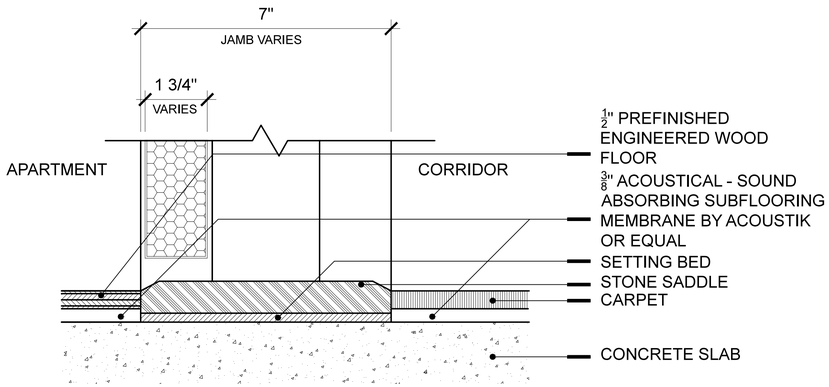

SADDLE 5 - ENTRY

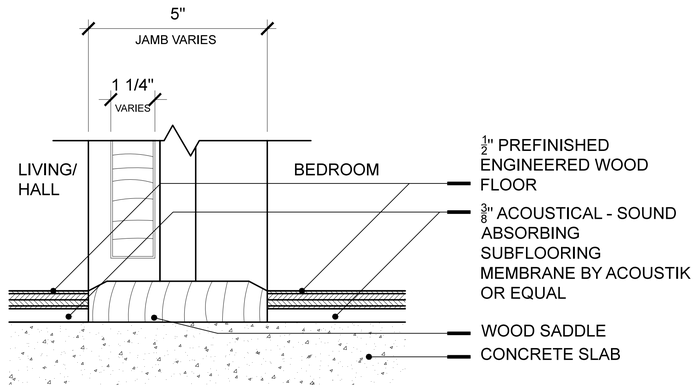

SADDLE 6 - BEDROOM

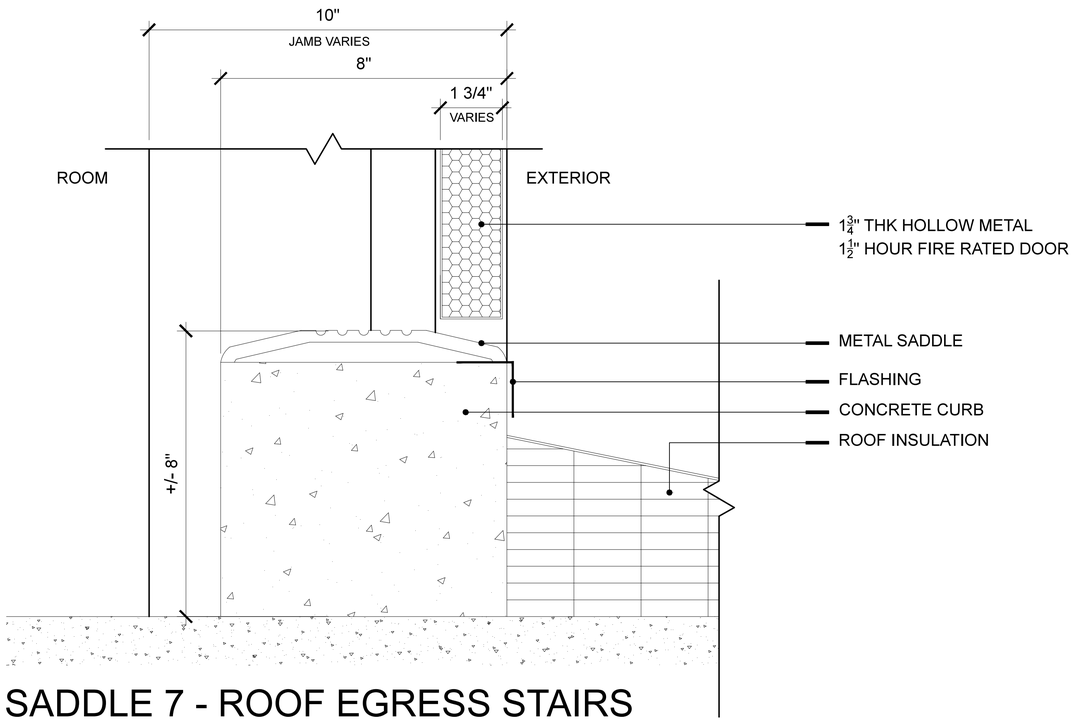

SADDLE 7 - ROOF EGRESS STAIRS

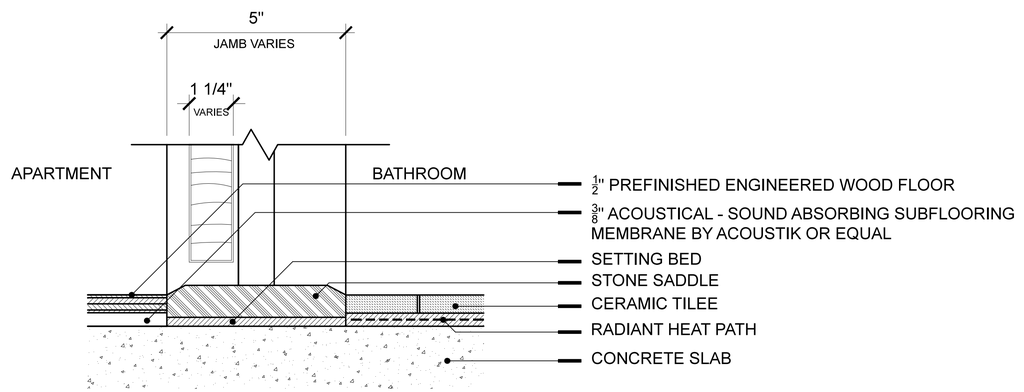

SADDLE 8 - BATHROOMS

ARCHITECT:
MORALI ARCHITECT
505 8th AVENUE, SUITE 2202, NEW YORK, NY, 10018
TEL. 212 219 2091 E-MAIL: MSTUDIONY@AOL.COM

ENGINEERING GROUP ASSOCIATES, PC
19 W 21ST STREET RM 1103 NY, NY, 10010 TEL: 212 982 1410

IMA ENGINEERING , PC
123-23 82 AVENUE, KEW GARDENS, NY, 11415 TEL: 718 268 8600

ADVANCED CLEANUP TECHNOLOGIES, INC.
110 MAIN STREET, SUITE 103, PORT WASHINGTON, NY, 11050

COPYRIGHT (C)
THESE PLAN ARE AN INSTRUMENT OF SERVICE AND ARE THE PROPERTY OF THE ARCHITECT.
This and all documents produced by this firm under this agreement shall remain the sole property of this firm and may not be used, copied, changed or distributed by the client or others without the written consent of this firm.
INFRINGEMENTS WILL BE PROSECUTED.

CONTRACTOR SHALL VERIFY ALL CONDITIONS AND MEASUREMENTS IN THE FIELD AND BE RESPONSIBLE FOR FIELD FIT AND QUANTITY OF WORK. NO ALLOWANCES SHALL BE MADE IN BEHALF OF THE CONTRACTOR FOR ANY ERROR OR NEGLECT ON HIS PART.

"THIS PLAN IS APPROVED ONLY FOR WORK INDICATED ON THE APPLICATION SPECIFICATION SHEET. ALL OTHER MATTERS SHOWN ARE NOT TO BE RELIED UPON, OR TO BE CONSIDERED AS EITHER BEING APPROVED OR IN ACCORDANCE WITH APPLICABLE CODES."

No.	Description	Date

PROJECT
36-33 31ST STREET
LONG ISLAND CITY, NY
11106

SADDLE DETAILS

SCALE : 6" = 1'-0"

SEAL
REGISTERED ARCHITECT ANTHONY J. MORALI 026983-1 STATE OF NEW YORK

Date	09.17.15
Project Number	1507
Drawn By	CI
Checked By	AM

A-706.00

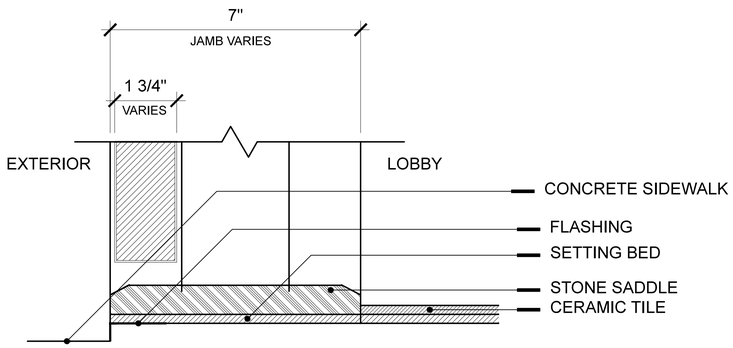

SADDLE 9 - EXTERIOR 1

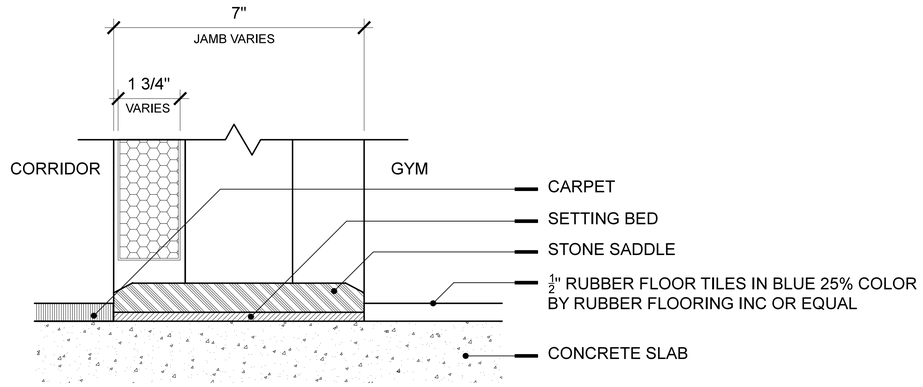

SADDLE 13 - GYM

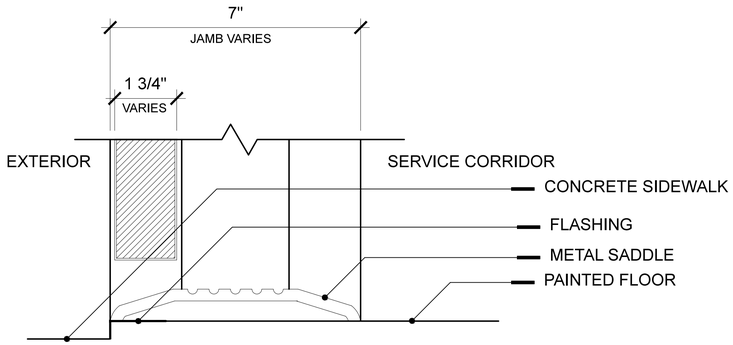

SADDLE 11 - EXTERIOR 2

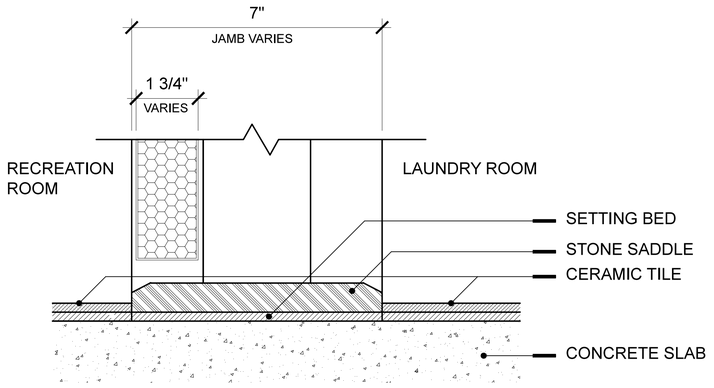

SADDLE 14 - LAUNDRY ROOM

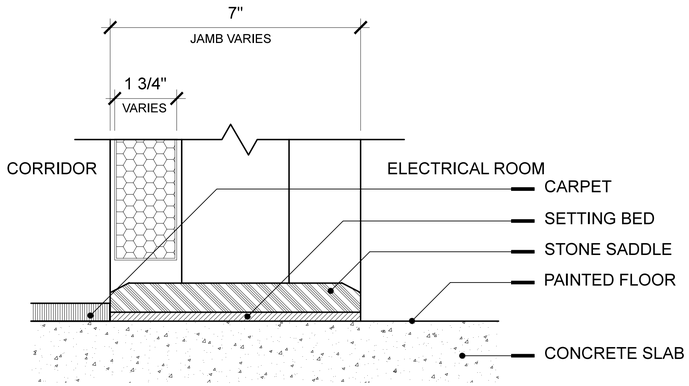

SADDLE 12 - ELECTRICAL

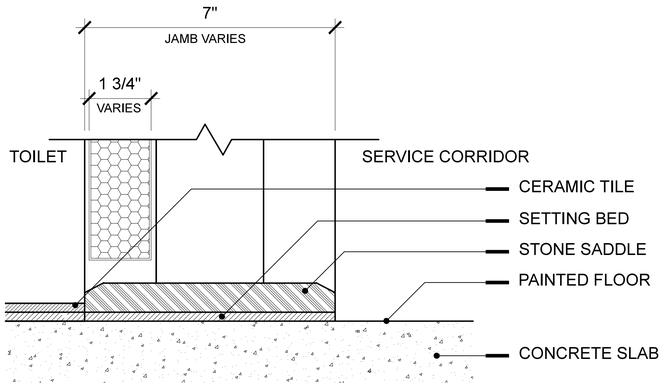

SADDLE 15 - TOILET

ARCHITECT:
MORALI ARCHITECT
505 8th AVENUE, SUITE 2202, NEW YORK, NY, 10018
TEL. 212 219 2091 E-MAIL: MSTUDIONY@AOL.COM

ENGINEERING GROUP ASSOCIATES, PC
19 W 21ST STREET RM 1103 NY, NY, 10010 TEL: 212 982 1410

IMA ENGINEERING , PC
123-23 82 AVENUE, KEW GARDENS, NY, 11415 TEL: 718 268 8600

ADVANCED CLEANUP TECHNOLOGIES, INC.
110 MAIN STREET, SUITE 103, PORT WASHINGTON, NY, 11050

COPYRIGHT (C)
THESE PLAN ARE AN INSTRUMENT OF SERVICE AND ARE THE PROPERTY OF THE ARCHITECT.
This and all documents produced by this firm under this agreement shall remain the sole property of this firm and may not be used, copied, changed or distributed by the client or others without the written consent of this firm.
INFRINGEMENTS WILL BE PROSECUTED.

CONTRACTOR SHALL VERIFY ALL CONDITIONS AND MEASUREMENTS IN THE FIELD AND BE RESPONSIBLE FOR FIELD FIT AND QUANTITY OF WORK. NO ALLOWANCES SHALL BE MADE IN BEHALF OF THE CONTRACTOR FOR ANY ERROR OR NEGLECT ON HIS PART.

"THIS PLAN IS APPROVED ONLY FOR WORK INDICATED ON THE APPLICATION SPECIFICATION SHEET. ALL OTHER MATTERS SHOWN ARE NOT TO BE RELIED UPON, OR TO BE CONSIDERED AS EITHER BEING APPROVED OR IN ACCORDANCE WITH APPLICABLE CODES."

No.	Description	Date

PROJECT
36-33 31ST STREET
LONG ISLAND CITY, NY
11106

SADDLE DETAILS

SCALE : 6" = 1'-0"

SEAL

Date	09.17.15
Project Number	1507
Drawn By	CI
Checked By	AM

A-707.00

WINDOW SCHEDULE

TYPE	DESCRIPTION	R.O./M.O. WIDTH	R.O./M.O. HEIGHT	QUANTITY LEFT HAND	QUANTITY RIGHT HAND	GLASS TYPE	U-FACTOR	OITC RATING	SHGC	AIR LEAKAGE	MANUFACTURER	NOTES
A	ALUMINUM ONE SASH DOUBLE CASEMENT	6' - 0"	7' - 0"	16		1" I.G.U., LOW-E, CLEAR (SOLARBAN 60)	0.47	35	0.25	≤ 0.30 CFM / SF	GLASBILT FA100 OR APPROVED EQUAL	MINIMUM dBA 40 ATTENUATION, THERMAL FRAME
B	ALUMINUM ONE SASH DOUBLE CASEMENT	6' - 0"	6' - 4"	2		1" I.G.U., LOW-E, CLEAR (SOLARBAN 60)	0.47	35	0.25	≤ 0.30 CFM / SF	GLASBILT FA100 OR APPROVED EQUAL	MINIMUM dBA 40 ATTENUATION, THERMAL FRAME
C	ALUMINUM ONE SASH DOUBLE CASEMENT	6' - 0"	6' - 8"	6		1" I.G.U., LOW-E, CLEAR (SOLARBAN 60)	0.47	35	0.25	≤ 0.30 CFM / SF	GLASBILT FA100 OR APPROVED EQUAL	MINIMUM dBA 40 ATTENUATION, THERMAL FRAME
D	ALUMINUM ONE SASH DOUBLE CASEMENT	6' - 0"	4' - 7"	6		1" I.G.U., LOW-E, CLEAR (SOLARBAN 60)	0.47	35	0.25	≤ 0.30 CFM / SF	GLASBILT FA100 OR APPROVED EQUAL	MINIMUM dBA 40 ATTENUATION, THERMAL FRAME
E	FIXED WINDOW	6' - 0"	1' - 8"	12		1" I.G.U., LOW-E, CLEAR (SOLARBAN 60)	0.47	35	0.25	≤ 0.30 CFM / SF	GLASBILT FA100 OR APPROVED EQUAL	MINIMUM dBA 40 ATTENUATION, THERMAL FRAME
F	2 X FIXED WINDOW, CORNER CONDITION	7' - 7"	7' - 0"	5		1" I.G.U., LOW-E, CLEAR (SOLARBAN 60)	0.47	35	0.25	≤ 0.30 CFM / SF	GLASBILT FA100 OR APPROVED EQUAL	MINIMUM dBA 40 ATTENUATION, THERMAL FRAME
G	FIXED WINDOW	4' - 0"	7' - 0"	5		1" I.G.U., LOW-E, CLEAR (SOLARBAN 60)	0.47	35	0.25	≤ 0.30 CFM / SF	GLASBILT FA100 OR APPROVED EQUAL	MINIMUM dBA 40 ATTENUATION, THERMAL FRAME
H	ALUMINUM CASEMENT	4' - 0"	5' - 4"	2		1" I.G.U., LOW-E, CLEAR (SOLARBAN 60)	0.47	35	0.25	≤ 0.30 CFM / SF	GLASBILT FA100 OR APPROVED EQUAL	MINIMUM dBA 40 ATTENUATION, THERMAL FRAME
I	ALUMINUM CASEMENT	2' - 6"	7' - 6"	5	5	1" I.G.U., LOW-E, CLEAR (SOLARBAN 60)	0.47	35	0.25	≤ 0.30 CFM / SF	GLASBILT FA100 OR APPROVED EQUAL	MINIMUM dBA 40 ATTENUATION, THERMAL FRAME
J	ALUMINUM CASEMENT	4' - 0"	7' - 0"	6		1" I.G.U., LOW-E, CLEAR (SOLARBAN 60)	0.47	35	0.25	≤ 0.30 CFM / SF	GLASBILT FA100 OR APPROVED EQUAL	MINIMUM dBA 40 ATTENUATION, THERMAL FRAME
K	ALUMINUM CASEMENT	3' - 6"	7' - 0"	6	6	1" I.G.U., LOW-E, CLEAR (SOLARBAN 60)	0.47	35	0.25	≤ 0.30 CFM / SF	GLASBILT FA100 OR APPROVED EQUAL	MINIMUM dBA 40 ATTENUATION, THERMAL FRAME
L	ALUMINUM CASEMENT + FIXED WINDOW, CORNER CONDITION	6' - 5"	7' - 0"	6		1" I.G.U., LOW-E, CLEAR (SOLARBAN 60)	0.47	35	0.25	≤ 0.30 CFM / SF	GLASBILT FA100 OR APPROVED EQUAL	MINIMUM dBA 40 ATTENUATION, THERMAL FRAME
M	ALUMINUM FRAMED STOREFRONT SYSTEM	4' - 7"	10' - 0"	2		DBL PANE, LOW-E, CLEAR, $\frac{1}{2}$" THK, TEMPERED	0.50	30	0.40	≤ 0.06 CFM / SF	KAWNEER 450 STORE FRONT OR EQUAL	MINIMUM dBA 30 ATTENUATION, THERMAL FRAME

NOTE:

1. AIR LEAKAGE: PROVIDE FLASHING, WINDOW DAMS, EXPANDABLE FOAM SEALANT AND AULKING AT ROUGH OPENING/ WINDOW FRAME JOINTS TO CREATE A CONTINUOUS AIR BARRIER WITH SURROUNDING WALL SYSTEM.
2. SEE DRAWINGS A-300 THROUGH A-303 FOR DETAILED WINDOW WALL AND STOREFRONT ELEVATIONS
3. MANUFACTURER'S AIR INFILTRATION RATE IS BASED ON 6.24 PSF (300 PA) STATIC AIR PRESSURE DIFFERENTIAL, TESTED IN ACCORDANCE WITH ASTM E 283.

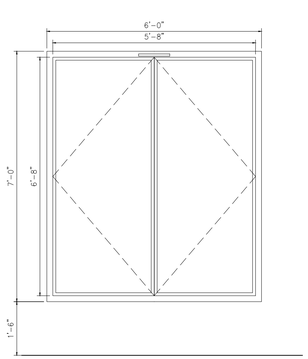

A

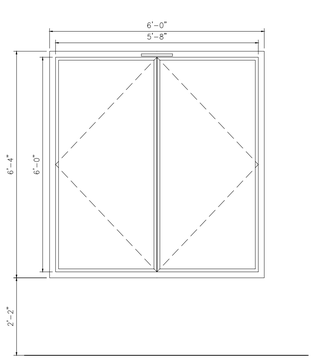

B

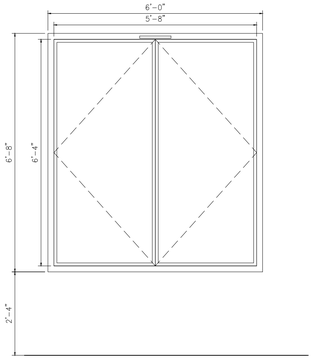

C

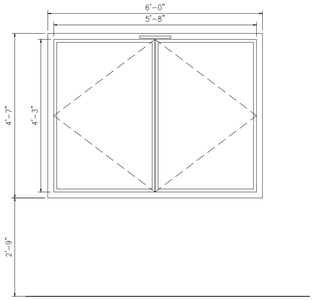

D

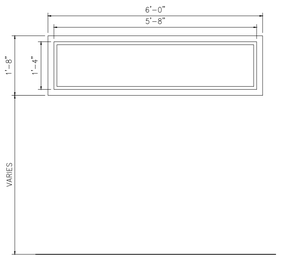

E

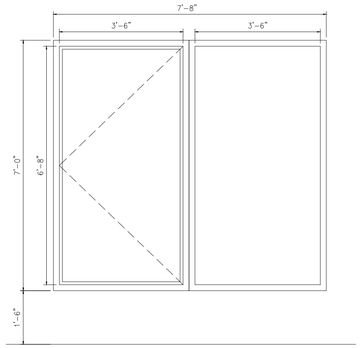

F

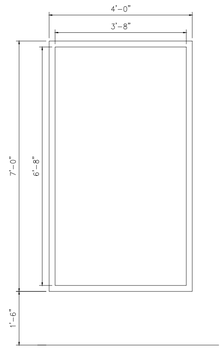

G

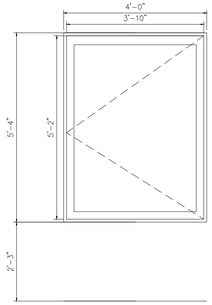

H

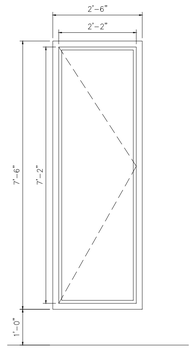

I

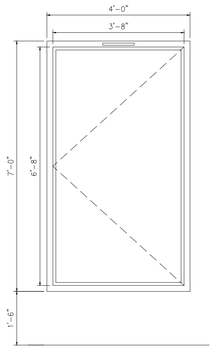

J

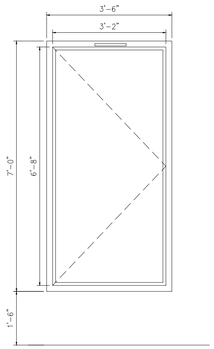

K

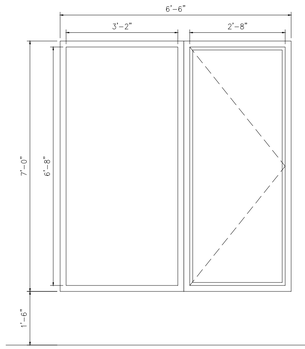

L

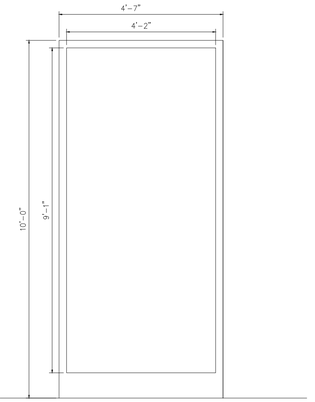

M

ARCHITECT:
MORALI ARCHITECTURE
505 8th AVENUE, SUITE 2202, NEW YORK, NY, 10018
TEL. 212 219 2091 E-MAIL: MSTUDIONY@AOL.COM

IMA ENGINEERING, PC
123-23 82 AVENUE, KEW GARDENS, NY, 11415 TEL: 718 268 8600

ADVANCED CLEANUP TECHNOLOGIES, INC.
110 MAIN STREET, SUITE 103, PORT WASHINGTON, NY, 11050

COPYRIGHT (C)
THESE PLAN ARE AN INSTRUMENT OF SERVICE AND ARE THE PROPERTY OF THE ARCHITECT.
This and all documents produced by this firm under this agreement shall remain the sole property of this firm and may not be used, copied, changed or distributed by the client or others without the written consent of this firm.
INFRINGEMENTS WILL BE PROSECUTED.

CONTRACTOR SHALL VERIFY ALL CONDITIONS AND MEASUREMENTS IN THE FIELD AND BE RESPONSIBLE FOR FIELD FIT AND QUANTITY OF WORK. NO ALLOWANCES SHALL BE MADE IN BEHALF OF THE CONTRACTOR FOR ANY ERROR OR NEGLECT ON HIS PART.

"THIS PLAN IS APPROVED ONLY FOR WORK INDICATED ON THE APPLICATION SPECIFICATION SHEET. ALL OTHER MATTERS SHOWN ARE NOT TO BE RELIED UPON, OR TO BE CONSIDERED AS EITHER BEING APPROVED OR IN ACCORDANCE WITH APPLICABLE CODES."

No.	Description	Date

PROJECT
36-37 31ST STREET
LONG ISLAND CITY, NY
11106

WINDOW SCHEDULE

SCALE : $\frac{1}{2}$" = 1'-0"

SEAL

REGISTERED ARCHITECT ANTHONY J. MORALI 031783-1 STATE OF NEW YORK

Date	10.12.15
Project Number	1507
Drawn By	CI
Checked By	AM

A-708.00

36-33 31st Street

QUEENS, NEW YORK

Remedial Action Work Plan

NYC VCP Project Number 16CVCP045Q
OER Project Number 16EH-N161Q

Prepared For:
Zoitco LLC
21-16 31st Avenue
Astoria, NY 11106

Prepared By:
Advanced Cleanup Technologies
110 Main Street, Suite 103
Port Washington, NY 11050

DECEMBER 2015

REMEDIAL ACTION WORK PLAN
TABLE OF CONTENTS

FIGURES

Figure 1: Locational Diagram
Figure 2: Site Diagram
Figure 3: Vapor Barrier and Composite Cover Specifications
Figure 4: Sampling Diagram
Figure 5: Metal Soil Cleanup Objectives Exceedances Diagram
Figure 6: Endpoint Sampling Diagram

TABLES

Table 1: Volatile Organic Compounds in Soil
Table 2: Semi Volatile Organic Compounds in Soil
Table 3: PCBs and Pesticides in Soil
Table 4: Metals in Soil
Table 5: Volatile Organic Compounds in Soil Vapor

APPENDICES

Appendix 1: Proposed Development Plans
Appendix 2: Citizen Participation Plan
Appendix 3: Sustainability Statement
Appendix 4: Soil/Materials Management Plan
Appendix 5: Manufacturer Specifications for Vapor Barrier
Appendix 6: Construction Health and Safety Plan

LIST OF ACRONYMS

Acronym	Definition
AOC	Area of Concern
AS/SVE	Air Sparging/Soil Vapor Extraction
BOA	Brownfield Opportunity Area
CAMP	Community Air Monitoring Plan
C&D	Construction and Demolition
CEQR	City Environmental Quality Review
CFR	Code of Federal Regulations
CHASP	Construction Health and Safety Plan
COC	Certificate of Completion
CQAP	Construction Quality Assurance Plan
CSOP	Contractors Site Operation Plan
DCR	Declaration of Covenants and Restrictions
ECs/ICs	Engineering Controls and Institutional Controls
ELAP	Environmental Laboratory Accreditation Program
HASP	Health and Safety Plan
HAZWOPER	Hazardous Waste Operations Emergency Response
IRM	Interim Remedial Measure
MNA	Monitored Natural Attenuation
NOC	Notice of Completion
NYS DEC	New York State Department of Environmental Conservation
NYC DEP	New York City Department of Environmental Protection
NYC DOHMH	New York State Department of Health and Mental Hygiene
NYC OER	New York City Office of Environmental Remediation
NYC VCP	New York City Voluntary Cleanup Program
NYCRR	New York Codes Rules and Regulations
NYS DEC	New York State Department of Environmental Conservation
NYS DEC DER	New York State Department of Environmental Conservation Division of Environmental Remediation

NYS DOH	New York State Department of Health
NYS DOT	New York State Department of Transportation
ORC	Oxygen-Release Compound
OSHA	United States Occupational Health and Safety Administration
PCBs	Polychlorinated Biphenyls
PE	Professional Engineer
PID	Photo Ionization Detector
QEP	Qualified Environmental Professional
QHHEA	Qualitative Human Health Exposure Assessment
RAOs	Remedial Action Objectives
RAR	Remedial Action Report
RAWP	Remedial Action Work Plan or Plan
RCA	Recycled Concrete Aggregate
RD	Remedial Design
RI	Remedial Investigation
RMZ	Residual Management Zone
SCOs	Soil Cleanup Objectives
SCG	Standards, Criteria and Guidance
SMP	Site Management Plan
SPDES	State Pollutant Discharge Elimination System
SSDS	Sub-Slab Depressurization System
SVOC	Semi-Volatile Organic Compound
TAL	Target Analyte List
TCL	Target Compound List
USGS	United States Geological Survey
UST	Underground Storage Tank
VCA	Voluntary Cleanup Agreement
VOC	Volatile Organic Compound

CERTIFICATION

I, Andrew R. Levenbaum, am currently a registered professional engineer licensed by the State of New York. I performed professional engineering services and had primary direct responsibility for designing the remedial program for the 36-33 31st Street site, site numbers 16CVCP045Q and 16EH-N161Q. I certify to the following:

- I have reviewed this document and the Stipulation List, to which my signature and seal are affixed.
- Engineering Controls developed for this remedial action were designed by me or a person under my direct supervision and designed to achieve the goals established in this Remedial Action Work Plan for this site.
- The Engineering Controls to be constructed during this remedial action are accurately reflected in the text and drawings of the Remedial Action Work Plan and are of sufficient detail to enable proper construction.
- This Remedial Action Work Plan (RAWP) has a plan for handling, transport and disposal of soil, fill, fluids and other materials removed from the property in accordance with applicable City, State and Federal laws and regulations. Importation of all soil, fill and other material from off-Site will be in accordance with all applicable City, State and Federal laws and requirements. This RAWP has provisions to control nuisances during the remediation and all invasive work, including dust and odor suppression.

_____
Name

_____
PE License Number

_____
Signature

_____
Date

PE Stamp

I, Paul P. Stewart, am a qualified Environmental Professional. I will have primary direct responsibility for implementation of the remedial program for the 36-33 31st Street site, site numbers 16CVCP045Q and 16EH-N161Q. I certify to the following:

- This Remedial Action Work Plan (RAWP) has a plan for handling, transport and disposal of soil, fill, fluids and other materials removed from the property in accordance with applicable City, State and Federal laws and regulations. Importation of all soil, fill and other material from off-Site will be in accordance with all applicable City, State and Federal laws and requirements. This RAWP has provisions to control nuisances during the remediation and all invasive work, including dust and odor suppression.

_____
QEP Name

_____
QEP Signature

_____
Date

EXECUTIVE SUMMARY

Zoitco LLC is working with the NYC Office of Environmental Remediation (OER) in the New York City Voluntary Cleanup Program to investigate and remediate a 5,800-square foot site located at 36-33 31st Street in Queens, New York. A remedial investigation (RI) was performed to compile and evaluate data and information necessary to develop this Remedial Action Work Plan (RAWP). The remedial action described in this document provides for the protection of public health and the environment consistent with the intended property use, complies with applicable environmental standards, criteria and guidance and conforms with applicable laws and regulations.

Site Location and Background

The Site is located at 36-33 31st Street in the Long Island City section in Queens, New York and is identified as Block 600 and Lot 12 on the New York City Tax Map. Figure 1 shows the Site location. The Site is approximately 5,800 square feet. Currently, the Site contains a vacant three-story residential apartment building with a detached garage, which is in the process of redevelopment to a mixed-use 7-story residential and commercial building. The residential building has a basement beneath the structure.

Summary of Redevelopment Plan

The proposed future use of the Site will consist of a 7-story mixed-use residential and commercial building. The depth of excavation for the redevelopment is approximately 10 feet at the property in the area of the cellar. The rest of the lot will be covered by a concrete-capped parking area. The current structures at the property will be removed from the Site to accommodate for the new construction of the proposed building. Layout of the proposed site development is presented in Figure 3. The current zoning designation is zoning designation M1-2/R6A. The proposed use is consistent with existing zoning for the property. The remedial action contemplated under this RAWP may be implemented independently of the proposed redevelopment plan.

Summary of Surrounding Property

The subject property is located in a residential, commercial, and industrial area in the western portion of the borough of Queens in New York City. The property is bounded by a three-story residential apartment building with a parking lot to the north, a vacant three-story residential building to the south, two-story residential apartment buildings to the east and 31st Street with an elevated subway followed by a one-story commercial building and a two-story residential apartment building to the west. Figure 1 shows the surrounding land usage.

Summary of Past Site Uses and Areas of Concern

According to a Phase I Environmental Site Assessment prepared by Advanced Cleanup Technologies dated on October 20, 2015, the historical usage of the property was residential since 1898 with improvements in subsequent years. The subject property has been imposed with a hazardous materials E-designation. No identifiable areas of concern were located from site inspections or historical review for the property therefore the following areas were investigated at the property:

1. The subsurface beneath the residential building.
2. The driveway to the south of the building.
3. The rear yard to the east of the building.

Summary of Work Performed under the Remedial Investigation

- Geophysical Investigation
- Soil boring advancement
- Soil sampling
- Soil vapor sampling
- Chemical analysis

Summary of Findings of Remedial Investigation

A remedial investigation was performed and the results are documented in a companion document called "Remedial Investigation Report, 36-33 31st Street", dated November 2015 (RIR).

The geology beneath the Site generally consisted of low plasticity silt underlain by poorly graded sand with frequent gravel to a depth of 8 feet bgs. Laboratory results indicated that metals were observed greater than the guidance values at the shallow elevation. Soil vapor quality did not

exceed either the NYSDOH guidance values for soil vapor in Final Guidance for Evaluating Soil Vapor Intrusion in the State of New York or the NYSDOH indoor air guidelines.

1. Elevation of the property ranges from 40 to 50 feet.
2. Depth to groundwater was not encountered during the remedial investigation to the maximum depth of investigation at 28 feet bgs. .
3. Groundwater flow is generally from east to the west beneath the Site.
4. Depth to bedrock is approximately 160 feet at the Site.
5. The stratigraphy of the site, from the surface down, consists of 40 feet of the Upper Glacial Aquifer unit underlain by 120 feet of the Raritan Confining unit.
6. Soil/fill sample results were compared to NYSDEC Unrestricted Use Soil Cleanup Objectives and Restricted Residential Soil Cleanup Objectives (SCOs) as presented in 6NYCRR Part 375-6.8. None of soil/fill samples collected during the RI detected PCBs or pesticides. The laboratory results from the five soil borings indicated that there were no exceedances of guidance values of VOCs, SVOCs, PCBs, or pesticides. Trace concentrations of one VOC, acetone and several SVOCs were detected in soil samples. Metals including copper (max 63.1 ppm), lead (max 183 ppm) and mercury (max 1.70 ppm) were identified above Unrestricted Use SCO's. Mercury also exceeded Restricted Residential Use SCOs in one shallow sample (soil borings SB-2). Overall, soil chemistry is unremarkable and does not indicate any disposal at this Site.
7. Two soil borings were advanced to depth of 28 feet below grade. Groundwater was not encountered.
8. Soil vapor results collected during the RI were compared to compounds listed by the NYSDOH located in the New York State Department of Health Final Guidance for Evaluating Soil Vapor Intrusion dated October 2006. Soil vapor collected during the RI showed low levels of petroleum-related VOCs. Total concentrations of petroleum-related VOCs (BTEX) detected at a maximum of 179 $\mu g/m^3$. Chlorinated trichloroethylene (TCE), carbon tetrachloride and TCA were not detected. Chlorinated tetrachloroethylene (PCE) was detected at a maximum of 26 $\mu g/m^3$, below the monitoring level ranges

established within the State DOH soil vapor guidance matrix. For more detailed results, consult the RIR. Based on an evaluation of the data and information from the RIR and this RAWP, disposal of significant amounts of hazardous waste is not suspected at this site.

Summary of the Remedial Action

The proposed remedial action achieves protection of public health and the environment for the intended use of the property. The proposed remedial action achieves all of the remedial action objectives established for the project and addresses applicable standards, criterion, and guidance; is effective in both the short-term and long-term and reduces mobility, toxicity and volume of contaminants; is cost effective and implementable; and uses standards methods that are well established in the industry.

The proposed remedial action will consist of:

1. Preparation of a Community Protection Statement and performance of all required NYC VCP Citizen Participation activities according to an approved Citizen Participation Plan.
2. Performance of a Community Air Monitoring Program for particulates and volatile organic carbon compounds.
3. Selection of Restricted Residential (Track 2) Soil Cleanup Objectives (SCOs).
4. Site mobilization involving Site security setup, equipment mobilization, utility mark outs and marking & staking excavation areas.
5. Completion of a Waste Characterization Study prior to excavation activities. Waste characterization soil samples will be collected at a frequency dictated by disposal facility(s).
6. Excavation and removal of soil/fill exceeding Restricted Residential (Track 2) SCOs, including the area of Track 2 mercury exceedance in SB-2. The entire footprint of the building area (about 35% of the property) will be excavated to a depth of approximately 10 feet below grade for development purposes with the top two feet of the remainder of the site. Approximately 1,000 tons of soil/fill will be removed from the Site and properly disposed at an appropriately licensed or permitted facility.

7. Screening of excavated soil/fill during intrusive work for indications of contamination by visual means, odor, and monitoring with a PID. Appropriate segregation of excavated media on-Site.
8. Management of excavated materials including temporarily stockpiling and segregating in accordance with defined material types and to prevent co-mingling of contaminated material and non-contaminated materials.
9. Removal of all UST's that are encountered during soil/fill removal actions. Registration of tanks and reporting of any petroleum spills associated with UST's and appropriate closure of these petroleum spills in compliance with applicable local, State and Federal laws and regulations.
10. Transportation and off-Site disposal of all soil/fill material at licensed or permitted facilities in accordance with applicable laws and regulations for handling, transport, and disposal, and this plan. Sampling and analysis of excavated media as required by disposal facilities. Appropriate segregation of excavated media on-Site.
11. Collection and analysis of end-point samples to determine the performance of the remedy with respect to attainment of Track 2 SCOs.
12. Import of materials to be used for backfill and cover in compliance with this plan and in accordance with applicable laws and regulations.
13. Performance of all activities required for the remedial action, including acquisition of required permits and attainment of pretreatment requirements, in compliance with applicable laws and regulations.
14. Implementation of storm-water pollution prevention measures in compliance with applicable laws and regulations.
15. Submission of a Remedial Action Report (RAR) that describes the remedial activities, certifies that the remedial requirements have been achieved, defines the Site boundaries, and lists any changes from this RAWP.
16. As part of development, construction of an engineered composite cover consisting of a six-inch thick reinforced concrete building slab will be constructed beneath the building area and six-inch concrete masonry unit reinforced with vertical bars at the grade level parking.

17. As part of development, installation of a vapor barrier system consisting of vapor barrier beneath the building slab and outside of sub-grade foundation sidewalls to mitigate soil vapor migration into the building. The vapor barrier system will consist of 20-mil Tex-Trude Xtreme vapor barrier extruded in a single sheet of material composed of virgin polyolefin resin. All welds, seams and penetrations will be properly sealed to prevent preferential pathways for vapor migration.
18. As part of new development, construction and operation of a grade-level parking garage with high volume air exchange in conformance with NYC Building Code.
19. Demarcation of residual soil/fill in landscaped areas.
20. Submission of an approved Site Management Plan (SMP) in the Remedial Action Plan (RAR) for long-term management of residual contamination (if needed), including plans for operation, maintenance, monitoring, inspection and certification of Engineering and Institutional Controls and reporting at a specified frequency.
21. The property will continue to be registered with an E-Designation at the NYC Buildings Department. Establishment of Engineering Controls and Institutional Controls in this RAWP and a requirement that management of these controls must be in compliance with an approved SMP. Institutional Controls will include prohibition of the following: (1) vegetable gardening and farming; (2) use of groundwater without treatment rendering it safe for the intended use; (3) disturbance of residual contaminated material unless it is conducted in accordance with the SMP; and (4) higher level of land usage without OER-approval.

COMMUNITY PROTECTION STATEMENT

The NYC Office of Environmental Remediation (OER) provides governmental oversight for the cleanup of contaminated property in NYC. This Remedial Action Work Plan ("cleanup plan") describes the findings of prior environmental studies, shows the location of identified contamination at the site, and describes the plans to clean up the site to protect public health and the environment.

This cleanup plan provides a very high level of protection for neighboring communities and also includes many other elements that address common community concerns, such as community air monitoring, odor, dust and noise controls, hours of operation, good housekeeping and cleanliness, truck management and routing, and opportunities for community participation. The purpose of this Community Protection Statement is to explain these community protection measures in non-technical language to simplify community review.

Project Information:

- Site Address: 36-33 31st Street, Long Island City, NY
- NYC Voluntary Cleanup Program Project Number: 16CVCP045Q

Project Contacts:

- OER Project Manager: Katherine Glass, 212-788-8841
- Site Project Manager: Mark Gelband, 516-441-5800 ext. 104
- Site Safety Officer: Yisong Yang, 516-441-5800 ext. 108
- Online Document Repository: http://www.nyc.gov/html/oer/html/document-repository/document-repository.shtml

Remedial Investigation and Cleanup Plan: Under the oversight of the NYC OER, a thorough study of this property (called a remedial investigation) has been performed to identify past property usage, to sample and test soils and soil vapor, and to identify contaminant sources present on the property. The cleanup plan has been designed to address all contaminant sources that have been identified during the study of this property.

Identification of Sensitive Land Uses: Prior to selecting a cleanup, the neighborhood was evaluated to identify sensitive land uses nearby, such as schools, day care facilities, hospitals and residential areas. The cleanup program was then tailored to address the special conditions of this community.

Qualitative Human Health Exposure Assessment: An important part of the cleanup planning for the Site is a study to find all of the ways that people might come in contact with contaminants at the Site now or in the future. This study is called a Qualitative Human Health Exposure Assessment (QHHEA). A QHHEA was performed for this project. This assessment has considered all known contamination at the Site and evaluated the potential for people to come in contact with this contamination. All identified public exposures will be addressed under this cleanup plan.

Health and Safety Plan: This cleanup plan includes a Construction Health and Safety Plan (CHASP) that is designed to protect community residents and on-Site workers. The elements of this RAWP are in compliance with applicable safety requirements of the United States Occupational Safety and Health Administration (OSHA). This RAWP includes many protective elements including those discussed below.

Site Safety Coordinator: This project has a designated Site safety coordinator to implement the CHASP. The safety coordinator maintains an emergency contact sheet and protocol for management of emergencies. The Site safety coordinator is identified at the beginning of this Community Protection Statement.

Worker Training: Workers participating in cleanup of contaminated material on this project are required to be trained in a 40-hour hazardous waste operators training course and to take annual refresher training. This pertains to workers performing specific tasks including removing contaminated material and installing cleanup systems in contaminated areas.

Community Air Monitoring Plan: Community air monitoring will be performed during this cleanup project to ensure that the community is properly protected from contaminants, dust and odors. Air samples will be tested in accordance with a detailed plan called the Community Air Monitoring Plan or CAMP. Results will be regularly reported to the NYC Office of Environmental Remediation. This cleanup plan also has a plan to address any unforeseen problems that might occur during the cleanup (called a 'Contingency Plan').

Odor, Dust and Noise Control: This cleanup plan includes actions for odor and dust control. These actions are designed to prevent off-Site odor and dust nuisances and includes steps to be taken if nuisances are detected. Generally, dust is managed by application of physical covers and by water sprays. Odors are controlled by limiting the area of open excavations, physical covers, spray foams and by a series of other actions (called operational measures). The project is also required to comply with applicable NYC noise control standards. If you observe problems in these areas, please contact the onsite Project Manager or NYC Office of Environmental Remediation Project Manager listed on the first page of this Community Protection Statement document.

Quality Assurance: This cleanup plan requires that evidence be provided to illustrate that all cleanup work required under the plan has been completed properly. This evidence will be summarized in the final report, called the Remedial Action Report. This report will be submitted to the NYC Office of Environmental Remediation and will be thoroughly reviewed.

Stormwater Management: To limit the potential for soil erosion and discharge, this cleanup plan has provisions for stormwater management. The main elements of the stormwater management include physical barriers such as tarp covers and erosion fencing, and a program for frequent inspection.

Hours of Operation: The hours for operation of cleanup will comply with the NYC Department of Buildings construction code requirements or according to specific variances

issued by that agency. For this cleanup project, the hours of operation will conform to requirements of the NYC Department of Buildings.

Signage: While the cleanup is in progress, a placard will be prominently posted at the main entrance of the property with a laminated project Fact Sheet that states that the project is in the NYC Voluntary Cleanup Program and provides project contact names and numbers, and a link to the document repository where project documents can be viewed.

Complaint Management: The contractor performing this cleanup is required to address all complaints. If you have any complaints, you can call the facility Project Manager or the NYC Office of Environmental Remediation Project Manager listed on the first page of this Community Protection Statement document, or call 311 and mention the Site is in the NYC Voluntary Cleanup Program.

Utility Mark-outs: To promote safety during excavation in this cleanup, the contractor is required to first identify all utilities and must perform all excavation and construction work in compliance with NYC Department of Buildings regulations.

Soil and Liquid Disposal: All soil and liquid material removed from the Site as part of the cleanup will be transported and disposed of in accordance with all applicable City, State and Federal regulations, and required permits will be obtained.

Soil Chemical Testing and Screening: All excavations will be supervised by a trained and properly qualified environmental professional. In addition to extensive sampling and chemical testing of soils on the Site, excavated soil will be screened continuously using hand-held instruments, by sight, and by smell to ensure proper material handling and management, and community protection.

Stockpile Management: Soil stockpiles will be kept covered with tarps to prevent dust, odor and erosion. Stockpiles will be frequently inspected. Damaged tarp covers will be

promptly replaced. Stockpiles will be protected with silt fences. Hay bales will be used, as needed, to protect storm water catch basins and other discharge points.

Trucks and Covers: Loaded trucks leaving the Site will be covered in compliance with applicable laws and regulations to prevent dust and odor. Trucks will be properly recorded in logs and records and placarded in compliance with applicable City, State and Federal laws, including those of the New York State Department of Transportation. If loads contain wet material that can leak, truck liners will be used. All transport of materials will be performed by licensed truckers and in compliance with applicable laws and regulations.

Imported Material: All fill materials proposed to be brought onto the Site will comply with rules outlined in this cleanup plan and will be inspected and approved by a qualified worker located on the Site. Waste materials will not be brought onto the Site. Trucks entering the Site with imported clean materials will be covered in compliance with applicable laws and regulations.

Equipment Decontamination: All equipment used for cleanup work will be inspected and washed, if needed, before it leaves the Site. Trucks will be cleaned at a truck inspection station on the property before leaving the Site.

Housekeeping: Locations where trucks enter or leave the Site will be inspected every day and cleaned regularly to ensure that they are free of dirt and other materials from the Site.

Truck Routing: Truck routes have been selected to: (a) limit transport through residential areas and past sensitive nearby properties; (b) maximize use of city-mapped truck routes; (c) limit total distance to major highways; (d) promote safety in entry to highways; (e) promote overall safety in trucking; and (f) minimize off-Site line-ups (queuing) of trucks entering the property. Operators of loaded trucks leaving the Site will be instructed not to stop or idle in the local neighborhood.

Final Report: The results of all cleanup work will be fully documented in a final report (called the Remedial Action Report) that will be available for public review online. A link to the online document repository and the public library with Internet access nearest the Site are listed on the first page of this Community Protection Statement document

Long-Term Site Management: If long-term protection is needed after the cleanup is complete, the property owner will be required to comply with an ongoing Site Management Plan that calls for continued inspection of protective controls, such as Site covers. The Site Management Plan is evaluated and approved by the NYC Office of Environmental Remediation. Requirements that the property owner must comply with are established through a city environmental designation registered with the Department of Buildings. A certification of continued protectiveness of the cleanup will be required from time to time to show that the approved cleanup is still effective.

REMEDIAL ACTION WORK PLAN

1.0 Project Background

Zoitco LLC is working with the NYC Office of Environmental Remediation (OER) in the New York City Voluntary Cleanup Program and/or in the "E" Designation Program to investigate and remediate a property located at 36-33 31st Street in the Long Island City section of Queens, New York (the "Site"). A Remedial Investigation (RI) was performed to compile and evaluate data and information necessary to develop this Remedial Action Work Plan (RAWP) in a manner that will render the Site protective of public health and the environment consistent with the contemplated end use. This RAWP establishes remedial action objectives, provides a remedial alternatives analysis that includes consideration of a permanent cleanup, and provides a description of the selected remedial action. The remedial action described in this document provides for the protection of public health and the environment, and complies with applicable environmental standards, criteria and guidance and applicable laws and regulations.

1.1 Site Location and Background

The Site is located at 36-33 31st Street in the Long Island City section in Queens, New York and is identified as Block 600 and Lot 12 on the New York City Tax Map. Figure 1 shows the Site location. The Site is approximately 5,800 square feet. Currently, the Site contains a vacant three-story residential apartment building with a detached garage, which is in the process of redevelopment to a mixed-use 7-story residential and commercial building. The residential building has a basement beneath the structure.

1.2 Redevelopment Plan

The proposed future use of the Site will consist of a 7-story mixed-use residential and commercial building. The depth of excavation for the redevelopment is approximately 10 feet at the property in the area of the cellar. The rest of the lot will be covered by a concrete-capped parking area. The current structures at the property will be removed from the Site to accommodate for the new construction of the proposed building. Layout of the proposed site development is presented in Figure 3. The current zoning designation is zoning designation M1-2/R6A. The proposed use is consistent with existing zoning for the property. The remedial action contemplated under this RAWP may be implemented independently of the proposed redevelopment plan.

1.3 Description of Surrounding Property

The subject property is located in a residential, commercial, and industrial area in the western portion of the borough of Queens in New York City. The property is bounded by a three-story residential apartment building with a parking lot to the north, a vacant three-story residential building to the south, two-story residential apartment buildings to the east and 31st Street with an elevated subway followed by a one-story commercial building and a two-story residential apartment building to the west. Figure 1 shows the surrounding land usage.

1.4 Summary of Past Site Uses and Areas of Concern

According to a Phase I Environmental Site Assessment prepared by Advanced Cleanup Technologies dated on October 20, 2015, the historical usage of the property was residential since 1898 with improvements in subsequent years. The subject property has been imposed with a hazardous materials E-designation. No identifiable areas of concern were located from site inspections or historical review for the property therefore the following areas were investigated at the property:

1. The subsurface beneath the residential building.
2. The driveway to the south of the building.
3. The rear yard to the east of the building.

1.5 Summary of Work Performed under the Remedial Investigation

- Geophysical Investigation
- Soil boring advancement
- Soil sampling
- Soil vapor sampling
- Chemical analysis

1.6 Summary of Findings of Remedial Investigation

A remedial investigation was performed and the results are documented in a companion document called "Remedial Investigation Report, 36-33 31st Street", dated November 2015 (RIR).

The geology beneath the Site generally consisted of low plasticity silt underlain by poorly graded sand with frequent gravel to a depth of 8 feet bgs. Laboratory results indicated that metals were observed greater than the guidance values at the shallow elevation. Soil vapor quality did not exceed either the NYSDOH guidance values for soil vapor in Final Guidance for Evaluating Soil Vapor Intrusion in the State of New York or the NYSDOH indoor air guidelines.

1. Elevation of the property ranges from 40 to 50 feet.
2. Depth to groundwater was not encountered during the remedial investigation to the maximum depth of investigation at 28 feet bgs. .
3. Groundwater flow is generally from east to the west beneath the Site.
4. Depth to bedrock is approximately 160 feet at the Site.
5. The stratigraphy of the site, from the surface down, consists of 40 feet of the Upper Glacial Aquifer unit underlain by 120 feet of the Raritan Confining unit.
6. Soil/fill sample results were compared to NYSDEC Unrestricted Use Soil Cleanup Objectives and Restricted Residential Soil Cleanup Objectives (SCOs) as presented in 6NYCRR Part 375-6.8. None of soil/fill samples collected during the RI detected PCBs or pesticides. The laboratory results from the five soil borings indicated that there were no exceedances of guidance values of VOCs, SVOCs, PCBs, or pesticides. Trace

concentrations of one VOC, acetone and several SVOCs were detected in soil samples. The metals copper (max 63.1 ppm), lead (max 183 ppm) and mercury (max 1.70 ppm) were identified above Unrestricted Use SCO's. Mercury also exceeded Restricted Residential Use SCOs in one shallow sample (soil borings SB-2). Overall, soil chemistry is unremarkable and does not indicate any disposal at this Site.

7. Two soil borings were advanced to depth of 28 feet below grade. Groundwater was not encountered.

8. Soil vapor results collected during the RI were compared to compounds listed by the NYSDOH located in the New York State Department of Health Final Guidance for Evaluating Soil Vapor Intrusion dated October 2006. Soil vapor collected during the RI showed low levels of petroleum-related VOCs. Total concentrations of petroleum-related VOCs (BTEX) detected at a maximum of 179 $\mu g/m^3$. Chlorinated VOCs trichloroethylene (TCE), carbon tetrachloride and TCA were not detected. Chlorinated tetrachloroethylene (PCE) was detected at a maximum of 26 $\mu g/m^3$, below the monitoring level ranges established within the State DOH soil vapor guidance matrix. For more detailed results, consult the RIR. Based on an evaluation of the data and information from the RIR and this RAWP, disposal of significant amounts of hazardous waste is not suspected at this site.

2.0 Remedial Action Objectives

Based on the results of the RI, the following Remedial Action Objectives (RAOs) have been identified for this Site:

Soil

- Prevent direct contact with contaminated soil.
- Prevent exposure to contaminants volatilizing from contaminated soil.

Groundwater

- Prevent exposure to contaminants volatilizing from contaminated groundwater.

Soil Vapor

- Prevent exposure to contaminants in soil vapor.
- Prevent migration of soil vapor into dwelling and other occupied structures.

3.0 Remedial Alternatives Analysis

The goal of the remedy selection process is to select a remedy that is protective of human health and the environment taking into consideration the current, intended and reasonably anticipated future use of the property. The remedy selection process begins by establishing RAOs for media in which chemical constituents were found in exceedance of applicable standards, criteria and guidance values (SCGs). Remedial alternatives are then developed and evaluated based on the following ten criteria:

- Protection of human health and the environment;
- Compliance with SCGs;
- Short-term effectiveness and impacts;
- Long-term effectiveness and permanence;
- Reduction of toxicity, mobility, or volume of contaminated material;
- Implementability;
- Cost effectiveness;
- Community acceptance;
- Land use; and
- Sustainability.

As required, a Track 2 Restricted Residential scenario is evaluated for the remedial action. The following is a detailed description of the alternatives analyzed to address impacted media at the Site:

Alternative 1:

- Selection of NYSDEC 6NYCRR Part 375 Restricted Residential (Track 2) Soil Cleanup Objectives (SCOs).
- Removal of all soil/fill exceeding Track 2 Restricted Residential SCOs throughout the Site and confirmation that Track 2 Restricted Residential SCOs have been achieved with post-excavation endpoint sampling. If soil/fill containing analytes at concentrations above Restricted Residential SCOs is still present at the base of the excavation after removal of all soil required for construction of the new building's cellar level is complete, additional

excavation would be performed to ensure complete removal of soil/ fill that does not meet Track 2 Restricted Residential SCOs.

- As part of development, a protective system of a vapor barrier, although not imperative in the Track 2 restricted residential SCO remedy, would be installed to prevent potential exposures from soil vapor in the future.

Alternative 2:

- Establishment of Site Specific (Track 4) SCOs;
- Removal of all soil/fill exceeding Track 4 Site-specific SCOs and confirmation that Track 4 Site-specific SCOs have been achieved with post-excavation end point sampling. Based on the results of the Remedial Investigation, it is expected that this alternative would be achieved by removal of the historic fill. As part of development, the depth of excavation will be approximately 10 feet to accommodate the cellar and removal of the top two feet for the remainder of the site. If soil/fill containing analytes at concentrations above Track 4 Site-specific SCOs is still present at the base of the excavation, additional excavation would be performed to meet Track 4 Site-Specific SCOs.
- Placement of a composite cover system over the entire Site to prevent exposure to remaining soil/fill;
- Installation of a vapor barrier system beneath the building slab and along foundation side walls to prevent potential exposures from soil vapor;
- Establishment of use restrictions including prohibitions on the use of groundwater from the Site; prohibitions of restricted Site uses, such as farming or vegetable gardening, to prevent future exposure pathways; and prohibition of a higher level of land use without OER approval;
- Establishment of an approved Site Management Plan (SMP) to ensure long-term management of these Engineering and Institutional Controls including the performance of periodic inspections and certification that the controls are performing as they were intended. The SMP will note that the property owner and property owner's successors and assigns must comply with the approved SMP; and
- The property will continue to be registered with an E-Designation at the NYC Buildings Department.

- Placement of a deed notice to record the ECs/ICs on the deed to ensure that future owners of the Site continue to comply with the SMP, as required.

3.1 Threshold Criteria

Protection of Public Health and the Environment

This criterion is an evaluation of the remedy's ability to protect public health and the environment, and an assessment of how risks posed through each existing or potential pathway of exposure are eliminated, reduced or controlled through removal, treatment, and implementation of Engineering Controls or Institutional Controls. Protection of public health and the environment must be achieved for all approved remedial actions.

Alternative 1 would be protective of human health and the environment by removing all soil/fill exceeding Track 2 Restricted Residential SCO's and groundwater protection standards, thus eliminating potential for direct contact with contaminated soil/fill once construction is complete and eliminating the risk of contaminants leaching into groundwater.

Alternative 2 would achieve comparable protections of human health and the environment by excavation and removal of most of the historic fill at the Site and by ensuring that remaining soil/fill on-Site meets Track 4 Site-Specific SCO's, as well as by placement of Institutional and Engineering Controls, including a composite cover system. The composite cover system would prevent direct contact with any remaining on-Site soil/fill. Implementing Institutional Controls including a Site Management Plan and continuing the E-designation would ensure that the composite cover system remains intact and protective of public health. Establishment of Track 4 Site-Specific SCO's would minimize the risk of contamination leaching into groundwater.

For both Alternatives, potential exposure to contaminated soils or groundwater during construction would be minimized by implementing a Construction Health and Safety Plan, an approved Soil/Materials Management Plan, and Community Air Monitoring Plan (CAMP). Potential contact with contaminated groundwater would be prevented as its use is prohibited by city laws and regulations. Potential future migration of off-Site soil vapors into the new building

would be prevented by installing a vapor barrier below the building slab and outside foundations walls below grade.

3.2 Balancing Criteria

Compliance with Standards, Criteria and Guidance (SCGs)

This evaluation criterion assesses the ability of the alternative to achieve applicable standards, criteria and guidance.

Alternative 1 would achieve compliance with the remedial goals, chemical-specific SCGs and RAOs for soil through removal of soil to achieve Track 2 Restricted Residential SCO's and Protection of Groundwater SCO's. Compliance with SCGs for soil vapor would also be achieved by installing a waterproofing/vapor barrier system below the new building's basement slab and continuing the vapor barrier outside of subgrade foundation walls, as part of development. In addition, the first floor of the building will contain a parking garage with high volume air exchange that conforms to the NYC Building Code.

Alternative 2 would achieve compliance with the remedial goals, chemical-specific SCG's and RAOs for soil through removal of soil to meet Track 4 Site-Specific SCO's. Compliance with SCG's for soil vapor would also be achieved by installing a waterproofing/vapor barrier system below the new building's basement slab and continuing the vapor barrier outside of subgrade foundation walls. A Site Management Plan would ensure that these controls remained protective for the long term. In addition, the first floor of the building will contain a parking garage with high volume air exchange that conforms to the NYC Building Code and will mediate any potential accumulation of soil vapors inside the building.

Health and safety measures contained in the CHASP and Community Air Monitoring Plan (CAMP) will be implemented during Site redevelopment under this RAWP. For both Alternatives, focused attention on means and methods employed during the remedial action would ensure that handling and management of contaminated material would be in compliance

with applicable SCGs. These measures will protect on-site workers and the surrounding community from exposure to Site-related contaminants.

Short-Term Effectiveness and Impacts

This evaluation criterion assesses the effects of the alternative during the construction and implementation phase until remedial action objectives are met. Under this criterion, alternatives are evaluated with respect to their short term effects during the remedial action on public health and the environment during implementation of the remedial action, including protection of the community, protection of onsite workers and environmental impacts.

Both Alternative 1 and 2 have similar short-term effectiveness during their implementation, as each requires excavation of historic fill material. Both alternatives would result in short-term dust generation impacts associated with excavation, handling, load out of materials, and truck traffic. Short-term impacts could potentially be higher for Alternative 1 since excavation of greater amounts of historical fill material would take place. However, focused attention to means and methods during a Track 2 removal action, including community air monitoring and appropriate truck routing, would minimize the overall impact of these activities.

An additional short-term adverse impact and risks to the community associated with both remedial alternatives is increased truck traffic. Truck traffic will be routed on the most direct course using major thoroughfares where possible and flag persons will be used to protect pedestrians at Site entrances and exits.

The potential adverse impact to the community, workers and the environment for both alternatives would be minimized through implementation of control plans including a Construction Health and Safety Plan, a Community Air Monitoring Plan (CAMP) and a Soil/Materials Management Plan (SMMP), during all on-Site soil disturbance activities and would minimize the release of contaminants into the environment. Both alternatives provide short-term effectiveness in protecting the surrounding community by decreasing the risk of contact with on-Site contaminants. Construction workers operating under appropriate management procedures and a Construction Health and Safety Plan (CHASP) would provide

protection from on-Site contaminants by using personal protective equipment would be worn consistent with the documented risks within the respective work zones.

Long-term effectiveness and permanence

This evaluation criterion addresses the results of a remedial action in terms of its permanence and quantity/nature of waste or residual contamination remaining at the Site after response objectives have been met, such as permanence of the remedial alternative, magnitude of remaining contamination, adequacy of controls including the adequacy and suitability of Engineering Controls/Institutional Controls (ECs/ICs) that may be used to manage contaminant residuals that remain at the Site and assessment of containment systems and ICs that are designed to eliminate exposures to contaminants, and long-term reliability of ECs.

Alternative 1 would achieve long-term effectiveness and permanence related to on-Site contamination by permanently removing all impacted soil/fill above Track 2 Restricted Residential SCO's. Removal of on-Site contaminant sources will also prevent future groundwater contamination.

Alternative 2 would provide long-term effectiveness by removing most on-Site contamination and attaining Track 4 Site-Specific SCOs; installing a composite cover system across the Site; maintaining use restrictions; establishing an SMP to ensure long-term management of ICs and ECs; and maintaining registration as an E-designated property to memorialize these controls for the long term. The SMP would ensure long-term effectiveness of all ECs and ICs by requiring periodic inspection and certification that these controls and restrictions continue to be in place and are functioning as they were intended, assuring that protections designed into the remedy continue to provide the required level of protection.

Reduction of toxicity, mobility, or volume of contaminated material

This evaluation criterion assesses the remedial alternative's use of remedial technologies that permanently and significantly reduce toxicity, mobility, or volume of contaminants as their principal element. The following is the hierarchy of source removal and control measures that

are to be used to remediate a Site, ranked from most preferable to least preferable: removal and/or treatment, containment, elimination of exposure and treatment of source at the point of exposure. It is preferred to use treatment or removal to eliminate contaminants at a Site, reduce the total mass of toxic contaminants, cause irreversible reduction in contaminants mobility, or reduce of total volume of contaminated media.

Alternative 1 will permanently eliminate the toxicity, mobility, and volume of contaminants from on-Site soil by removing all soil in excess of Track 2 Restricted Residential SCO's.

Alternative 2 would remove most of the historic fill at the Site, and all remaining on-Site soil/fill beneath the new building will meet Track 4 Site-Specific SCO's.

Alternative 1 would remove a greater total mass of contaminants from the Site. The removal of soil to approximately 10 feet for the cellar and the top two feet for the remainder of the site for the new development in both scenarios would lessen the difference in contaminant mass removal between these two alternatives.

Implementability

This evaluation criterion addresses the technical and administrative feasibility of implementing an alternative and the availability of various services and materials required during its implementation, including technical feasibility of construction and operation, reliability of the selected technology, ease of undertaking remedial action, monitoring considerations, administrative feasibility (e.g. obtaining permits for remedial activities), and availability of services and materials.

The techniques, materials and equipment to implement both Alternatives 1 and 2 are readily available and have been proven to be effective in remediating the contaminants present on the Site. They use standard equipment and technologies that are well established in the industry. The reliability of each remedy is also high. There are no special difficulties associated with any of the activities proposed.

Cost effectiveness

This evaluation criterion addresses the cost of alternatives, including capital costs (such as construction costs, equipment costs, and disposal costs, engineering expenses) and site management costs (costs incurred after remedial construction is complete) necessary to ensure the continued effectiveness of a remedial action.

Since historic fill at the Site, as indicated from the laboratory results, was found to extend to a depth of up to 2 feet below grade during the RI, and the new building requires partial excavation of the Site to a depth of 10 feet and removal of the top two feet for the remainder of the site, the costs associated with both Alternative 1 and Alternative 2 will likely be comparable. Costs associated with Alternative 1 could potentially be higher than Alternative 2 if soil with analytes above Track 2 Restricted Residential SCOs is encountered below the excavation depth required for development. Additional costs would include installation of additional shoring/underpinning, disposal of additional soil, and import of clean soil for backfill.

The remedial plan would couple the remedial action with the redevelopment of the Site, lowering total costs. The remedial plan will also consider the selection of the most appropriate disposal facilities to reduce transportation and disposal costs during cleanup and redevelopment of the Site.

Community Acceptance

This evaluation criterion addresses community opinion and support for the remedial action. Observations here will be supplemented by public comment received on the RAWP.

This RAWP will be subject to a public review under the NYC VCP and will provide the opportunity for detailed public input on the remedial alternatives and the selected remedy. This public comment will be considered by OER prior to approval of this plan. The Citizen Participation Plan for the project is provided in Appendix 2. Observations here will be supplemented by public comment received on the RAWP. Under both alternatives, the overall goals of the remedial program, to protect public health and the environment and eliminate potential contaminant exposures, have been broadly supported by citizens in NYC communities.

Land use

This evaluation criterion addresses the proposed use of the property. This evaluation has considered reasonably anticipated future uses of the Site and takes into account: current use and historical and/or recent development patterns; applicable zoning laws and maps; NYS Department of State's Brownfield Opportunity Areas (BOA) pursuant to section 970-r of the general municipal law; applicable land use plans; proximity to real property currently used for residential use, and to commercial, industrial, agricultural, and/or recreational areas; environmental justice impacts, Federal or State land use designations; population growth patterns and projections; accessibility to existing infrastructure; proximity of the site to important cultural resources and natural resources, potential vulnerability of groundwater to contamination that might emanate from the site, proximity to flood plains, geography and geology; and current Institutional Controls applicable to the site.

The current, intended, and reasonably anticipated future land use of the Site and its surroundings are compatible with the selected remedy of soil remediation. The proposed future use of the Site consists of a new 7-story mixed-use commercial and residential building. The proposed development includes a partial build out of the property with a cellar accommodating a water and electric service room, storage room, bicycle rack and a restroom set below the surface grade at a depth of approximately 10 feet. The first floor will contain commercial and residential space with vehicular parking. The second floor will consist of commercial and residential usage. Floors 3 through 7 are planned for residential units. Following remediation, the Site will meet either Track 2 Restricted Residential or Track 4 Site-Specific SCOs, both of which are protective of public health and the environment for its planned residential use. The proposed use is compliant with the property's zoning and is consistent with recent development patterns. The areas surrounding the site are residential, commercial, and industrial. The proposed development would clean up the property and make it safer, create new employment opportunities, provide 22 one bedroom residential units and other economic benefits from land revitalization. Temporary short-term project impacts are being mitigated through site management controls and truck traffic controls during remediation activities. Following remediation, the Site will meet either Track 2 Restricted Residential SCOs or Track 4 Site-Specific SCOs, both of which are protective of public health and the environmental for its planned use.

The Site is not in close proximity to important cultural resources, including federal or state historic or heritage sites or Native American religious sites, natural resources, waterways, wildlife refuges, wetlands, or critical habitats of endangered or threatened species. The Site is located in an urban area and not in proximity to fish or wildlife and neither alternative would result in any potential exposure pathways of contaminant migration affecting fish or wildlife. The remedial action is also protective of groundwater natural resources. The Site does not lie in a Federal Emergency Management Agency (FEMA)-designated flood plain. Both alternatives are equally protective of natural resources and cultural resources. Improvements in the current environmental condition of the property achieved by both alternatives considered in this plan are consistent with the City's goals for cleanup of contaminated land.

Sustainability of the Remedial Action

This criterion evaluates the overall sustainability of the remedial action alternatives and the degree to which sustainable means are employed to implement the remedial action including those that take into consideration NYC's sustainability goals defined in PlaNYC: A Greener, Greater New York. Sustainability goals may include: maximizing the recycling and reuse of non-virgin materials; reducing the consumption of virgin and non-renewable resources; minimizing energy consumption and greenhouse gas emissions; improving energy efficiency; and promotion of the use of native vegetation and enhancing biodiversity during landscaping associated with Site development.

While Alternative 2 would potentially result in lower energy usage based on reducing the volume of material transported off-Site, both remedial alternatives are comparable with respect to the opportunity to achieve sustainable remedial action. The remedial plan for either alternative would take into consideration the shortest trucking routes during off-Site disposal of historic fill and other soils, which would reduce greenhouse gas emissions and conserve energy used to fuel trucks. The New York City Clean Soil Bank program is available for reuse of any clean native soils under either alternative. A complete list of green remedial activities considered as part of the NYC VCP is included in a Sustainability Statement.

4.0 Remedial Action

4.1 Summary of Preferred Remedial Action

The preferred remedial action alternative is Alternative 1, the Track 2 remedial action. The preferred remedial action achieves protection of public health and the environment for the intended use of the property. The preferred remedial action will achieve all of the remedial action objectives established for the project and addresses applicable SCGs. The preferred remedial action is effective in both the short-term and long-term and reduces mobility, toxicity and volume of contaminants. The preferred remedial action alternative is cost effective and implementable and uses standards methods that are well established in the industry.

The proposed remedial action will consist of:

1. Preparation of a Community Protection Statement and performance of all required NYC VCP Citizen Participation activities according to an approved Citizen Participation Plan.
2. Performance of a Community Air Monitoring Program for particulates and volatile organic carbon compounds.
3. Selection of Restricted Residential (Track 2) Soil Cleanup Objectives (SCOs).
4. Site mobilization involving Site security setup, equipment mobilization, utility mark outs and marking & staking excavation areas.
5. Completion of a Waste Characterization Study prior to excavation activities. Waste characterization soil samples will be collected at a frequency dictated by disposal facility(s).
6. Excavation and removal of soil/fill exceeding Restricted Residential (Track 2) SCOs, including the area of Track 2 mercury exceedance in SB-2.
   The entire footprint of the building area (about 35% of the property) will be excavated to a depth of approximately 10 feet below grade for development purposes with the top two feet of the remainder of the site. Approximately 1,000 tons of soil/fill will be removed from the Site and properly disposed at an appropriately licensed or permitted facility.
7. Screening of excavated soil/fill during intrusive work for indications of contamination by visual means, odor, and monitoring with a PID. Appropriate segregation of excavated media on-Site.

8. Management of excavated materials including temporarily stockpiling and segregating in accordance with defined material types and to prevent co-mingling of contaminated material and non-contaminated materials.
9. Removal of all UST's that are encountered during soil/fill removal actions. Registration of tanks and reporting of any petroleum spills associated with UST's and appropriate closure of these petroleum spills in compliance with applicable local, State and Federal laws and regulations.
10. Transportation and off-Site disposal of all soil/fill material at licensed or permitted facilities in accordance with applicable laws and regulations for handling, transport, and disposal, and this plan. Sampling and analysis of excavated media as required by disposal facilities. Appropriate segregation of excavated media on-Site.
11. Collection and analysis of end-point samples to determine the performance of the remedy with respect to attainment of Track 2 SCOs.
12. Import of materials to be used for backfill and cover in compliance with this plan and in accordance with applicable laws and regulations.
13. Performance of all activities required for the remedial action, including acquisition of required permits and attainment of pretreatment requirements, in compliance with applicable laws and regulations.
14. Implementation of storm-water pollution prevention measures in compliance with applicable laws and regulations.
15. Submission of a Remedial Action Report (RAR) that describes the remedial activities, certifies that the remedial requirements have been achieved, defines the Site boundaries, and lists any changes from this RAWP.
16. As part of development, construction of an engineered composite cover consisting of a six-inch thick reinforced concrete building slab will be constructed beneath the building area and six-inch concrete masonry unit reinforced with vertical bars at the grade level parking.
17. As part of development, installation of a vapor barrier system consisting of vapor barrier beneath the building slab and outside of sub-grade foundation sidewalls to mitigate soil vapor migration into the building. The vapor barrier system will consist of a 20-mil vapor barrier constructed of high strength and environmentally friendly, polyolefin resin below

the slab throughout the full building area and a 20-mil vapor barrier constructed of polyolefin resin outside all sub-grade foundation sidewalls. All welds, seams and penetrations will be properly sealed to prevent preferential pathways for vapor migration.

18. As part of new development, construction and operation of a grade-level parking garage with high volume air exchange in conformance with NYC Building Code.
19. Demarcation of residual soil/fill in landscaped areas.
20. Submission of an approved Site Management Plan (SMP) in the Remedial Action Plan (RAR) for long-term management of residual contamination, including plans for operation, maintenance, monitoring, inspection and certification of Engineering and Institutional Controls and reporting at a specified frequency.
21. The property will continue to be registered with an E-Designation at the NYC Buildings Department. Establishment of Engineering Controls and Institutional Controls in this RAWP and a requirement that management of these controls must be in compliance with an approved SMP. Institutional Controls will include prohibition of the following: (1) vegetable gardening and farming; (2) use of groundwater without treatment rendering it safe for the intended use; (3) disturbance of residual contaminated material unless it is conducted in accordance with the SMP; and (4) higher level of land usage without OER-approval.

4.2 Soil Cleanup Objectives and Soil/ Fill Management

Track 2 Restricted Residential SCOs are proposed for this project and SCO's are defined in 6 NYCRR Part 375, Table 6.8 Track 2 Residential (or) Restricted Residential (or) Restricted Commercial Use. If these Track 2 SCO's are not achieved, the following site-specific SCO's will be utilized:

The following Track 4 Site-Specific SCO's will be utilized for this project:

Contaminant	**Site-Specific SCO's**
Mercury	2.5 ppm

Soil and materials management on-Site and off-Site, including excavation, handling and disposal, will be conducted in accordance with the Soil/Materials Management Plan in Appendix 4. Discrete contaminant sources (such as hotspots) identified during the remedial action will be identified by GPS or surveyed. This information will be provided in the Remedial Action Report.

Soil/Fill Excavation and Removal

The location of planned excavations is shown in Figure 3. The total quantity of soil/fill expected to be excavated and disposed off-Site is approximately 1,000 tons. For each disposal facility to be used in the remedial action, a letter from the developer/QEP to the receiving facility requesting approval for disposal and a letter back to the developer/QEP providing approval for disposal will be submitted to OER prior to any transport and disposal of soil at a facility.

Disposal facilities will be reported to OER when they are identified and prior to the start of remedial action.

End-point Sampling

End-point samples will be analyzed for compounds and elements as described below utilizing the following methodology:

- Semi-volatile organic compounds by EPA Method 8270;
- Target Analyte List metals; and

New York State ELAP certified labs will be used for all end-point sample analyses. Labs performing end-point sample analyses will be reported in the RAR. The RAR will provide a tabular and map summary of all end-point sample results and will include all data including non-detects and applicable standards and/or guidance values.

Confirmation End-point Sampling

Removal actions for development purposes under this plan will be performed in conjunction with confirmation end-point soil sampling. Four confirmation samples will be collected from the base of the excavation at locations to be determined by OER. To evaluate attainment of Track 2 Restricted Residential SCOs, analytes will include those for which SCOs have been developed, including SVOCs, lead and mercury according to analytical methods described above.

Hotspot End-point Sampling

End-point samples will be collected from the base of excavation at the hotspot location identified in the Remedial Investigation, according to the procedure listed below. Hotspots include soil boring SB-2 (0-2') for mercury. End-point samples will be analyzed for SCO trigger parameters.

For any hotspots identified during this remedial program, including any hotspots identified during the remedial action, hotspot removal actions will be performed to ensure that hotspots are fully removed and end-point samples will be collected at the following frequency:

1. For excavations less than 20 feet in total perimeter, at least one bottom sample and one sidewall sample biased in the direction of surface runoff.
2. For excavations 20 to 300 feet in perimeter:
    - For surface removals, one sample from the top of each sidewall for every 30 linear feet of sidewall and one sample from the excavation bottom for every 900 square feet of bottom area.
    - For subsurface removals, one sample from each sidewall for every 30 linear feet of sidewall and one sample from the excavation bottom for every 900 square feet of bottom area.
3. For sampling of volatile organics, bottom samples should be taken within 24 hours of excavation, and should be taken from the zero to six-inch interval at the excavation floor. Samples taken after 24 hours should be taken at six to twelve inches.
4. For contaminated soil removal, post remediation soil samples for laboratory analysis should be taken immediately after contaminated soil removal. If the excavation is enlarged horizontally, additional soil samples will be taken pursuant to bullets 1-3 above.

Post-remediation end-point sample locations and depth will be biased towards the areas and depths of highest contamination identified during previous sampling episodes unless field indicators such as field instrument measurements or visual contamination identified during the remedial action indicate that other locations and depths may be more heavily contaminated. In all cases, post-remediation samples should be biased toward locations and depths of the highest expected contamination.

If either LNAPL and/or DNAPL are detected, appropriate samples will be collected for characterization and "finger print analysis" and required regulatory reporting (i.e. spills hotline) will be performed.

Quality Assurance/Quality Control

The fundamental QA objective with respect to accuracy, precision, and sensitivity of analysis for laboratory analytical data is to achieve the QC acceptance of the analytical protocol. The accuracy, precision and completeness requirements will be addressed by the laboratory for all data generated.

One blind duplicate sample for every 20 samples collected will be submitted to the approved laboratory for analysis of the same parameters. Trip blanks will be used whenever samples are transported to the laboratory for analysis of VOCs. One trip blank will be submitted to the laboratory with each shipment of soil samples. Trip blanks will not be used for samples to be analyzed for metals, SVOCs or pesticides.

Collected samples will be appropriately packaged, placed in coolers and shipped via overnight courier or delivered via a courier from the analytical laboratory. Samples will be containerized in appropriate laboratory provided glassware and shipped in plastic coolers. Samples will be preserved through the use of ice or "cold-paks" to maintain a temperature of 4°C. The holding times on the soil samples is 14 days from the time of collection for the samples to be analyzed for VOCs, SVOCs, Pesticides and PCBs. The holding time for Target Analyte List Metals is 6 months with the exception of mercury, which is 28 days.

Dedicated disposable sampling materials will be used for the collection of endpoint samples, eliminating the need to prepare field equipment (rinsate) blanks. However, if non-disposable equipment is used, (stainless steel scoop, etc.) field rinsate blanks will be prepared at the rate of 1 for every eight samples collected. Decontamination of non-dedicated sampling equipment will consist of the following:

- Gently tap or scrape to remove adhered soil
- Rinse with tap water
- Wash with alconox® detergent solution and scrub

- Rinse with tap water
- Rinse with distilled or deionized water

Field blanks will be prepared by pouring distilled or deionized water over decontaminated equipment and collecting the water in laboratory provided containers.

Import of Soils

Soil import is not planned on this project.

Reuse of Onsite Soils

Reuse of onsite soils already onsite will be performed in conformance with the Soil/Materials Management Plan in Appendix 4. The estimated quantity of soil to be reused on this project is 500 tons. Reuse soils will meet the SCO's established for this project. Soil backfill placement will occur in the parking area surrounding the proposed building.

4.3 Engineering Controls

If Track 2 Restricted Residential SCOs are not achieved, Engineering Controls will be employed in the remedial action to address residual contamination remaining at the site. The Site has two primary Engineering Control Systems. These are:

(1) Composite Cover System
(2) Soil Vapor Barrier System

Composite Cover System

Exposure to residual soil/fill will be prevented by an engineered, composite cover system to be built on the Site. This composite cover system will be comprised of:

- Eighteen-inch thick poured reinforced concrete foundation walls;
- Six-inch thick concrete masonry unit with reinforcing vertical bars at the grade level parking;

- Six-inch reinforced concrete building slab.

A figure showing the typical design for each remedial cover type used on this Site is included as Figure 3. The figure showing the location of each cover type built at the Site will be supplied under separate cover with the stipulation list.

The composite cover system will be a permanent engineering control. The system will be inspected and its performance certified at specified intervals as required by this RAWP and the Site Management Plan. A Soil and Materials Management Plan will be included in the Site Management Plan and will outline the procedures to be followed in the event that the composite cover system and underlying residual soil/fill is disturbed after the remedial action is complete. Maintenance of this composite cover system will be described in the Site Management Plan in the Remedial Action Report.

Vapor Barrier System

Migration of soil vapor from onsite or offsite sources into the building will be mitigated with a combination of building slab and vapor barrier. The vapor barrier will consist of 20-mil Tex Trude Xtreme vapor barrier extruded in a single sheet of material composed of virgin polyolefin resin.

The vapor barrier will extend throughout the area occupied by the footprint of the new building and up the foundation sidewalls and will be installed in accordance with manufacturer specifications. Product specification sheets are provided in Appendix 5. The Remedial Action Report will include as-built drawings and diagrams; manufacturer documentation; and photographs. The Remedial Action Report will include a PE-certified letter (on company letterhead) from the primary contractor responsible for installation oversight and field inspections and a copy of the manufacturer's certificate of warranty.

The Vapor Barrier System is a permanent engineering control and will be inspected and its performance certified at specified intervals as required by this RAWP and the Site Management Plan. A Soil and Materials Management Plan will be included in the Site Management Plan and

will outline the procedures to be followed in the event that the composite cover system and underlying vapor barrier system is disturbed after the remedial action is complete. Maintenance of these systems will be described in the Site Management Plan in the Remedial Action Report.

4.4 Institutional Controls

A series of Institutional Controls (IC's) are required under this Remedial Action to assure permanent protection of public health by elimination of exposure to residual materials. These IC's define the program to operate, maintain, inspect and certify the performance of Engineering Controls and Institutional Controls on this property. Institutional Controls would be implemented in accordance with a Site Management Plan included in the final Remedial Action Report (RAR). Institutional Controls would be:

- Continued registration of the E-Designation for the property. This RAWP includes a description of all ECs and ICs and summarizes the requirements of the SMP which will note that the property owner and property owner's successors and assigns must comply with the approved SMP;
- Submittal of a SMP in the RAR for approval by OER that provides procedures for appropriate operation, maintenance, inspection, and certification of ECs and IC's. SMP will require that the property owner and property owner's successors and assigns will submit to OER a periodic written statement that certifies that: (1) controls employed at the Site are unchanged from the previous certification or that any changes to the controls were approved by OER; and, (2) nothing has occurred that impairs the ability of the controls to protect public health and environment or that constitute a violation or failure to comply with the SMP. OER retains the right to enter the Site in order to evaluate the continued maintenance of any controls. This certification shall be submitted at a frequency to be determine by OER in the SMP and will comply with RCNY §43-1407(l)(3).
- Vegetable gardens and farming on the Site are prohibited in contact with residual soil materials;
- Use of groundwater underlying the Site is prohibited without treatment rendering it safe for its intended use;

- All future activities on the Site that will disturb residual material must be conducted pursuant to the soil management provisions in an approved SMP;
- The Site will be used for residential and commercial use and will not be used for a higher level of use without prior approval by OER.

4.5 Site Management Plan

Site Management is the last phase of remediation and begins with the approval of the Remedial Action Report and issuance of the Notice of Completion (NOC) for the Remedial Action. The Site Management Plan (SMP) describes appropriate methods and procedures to ensure implementation of all ECs and ICs that are required by this RAWP. The Site Management Plan is submitted as part of the RAR but will be written in a manner that allows its use as an independent document. Site Management continues until terminated in writing by OER. The property owner is responsible to ensure that all Site Management responsibilities defined in the Site Management Plan are implemented.

4.6 Qualitative Human Health Exposure Assessment

The objective of the qualitative exposure assessment is to identify potential receptors and pathways for human exposure to the contaminants of concern (COC) that are present at, or migrating from, the Site. The identification of exposure pathways describes the route that the COC takes to travel from the source to the receptor. An identified pathway indicates that the potential for exposure exists; it does not imply that exposures actually occur.

Data and information reported in the Remedial Investigation Report (RIR) are sufficient to complete a Qualitative Human Health Exposure Assessment (QHHEA) for this project. As part of the VCP process, a QHHEA was performed to determine whether the Site poses an existing or future health hazard to the Site's exposed or potentially exposed population. The sampling data from the RI were evaluated to determine whether there is any health risk under current and future conditions by characterizing the exposure setting, identifying exposure pathways, and evaluating contaminant fate and transport. This QHHEA was prepared in accordance with Appendix 3B and Section 3.3 (b) 8 of the NYSDEC Draft DER-10 Technical Guidance for Site Investigation and Remediation.

Known and Potential Contaminant Sources

Based on the results of the RIR, the contaminants of concern are:

Soil: Mercury exceeded Restricted Residential SCOs.

Soil Vapor: Low levels of VOCs detected in soil vapor.

Nature, Extent, Fate and Transport of Contaminants

Three shallow soil samples collected from the 0-2 foot interval in the exterior of the building exhibited metals including copper, lead and mercury with only mercury detected in the soil boring advanced along the central portion of the driveway exhibited at detectable concentrations greater than the Restricted Residential SCO. Additionally, three shallow soil samples consisting of one interior and two exterior samples indicated total SVOCs greater than 1,000 (μg/kg) with the highest observed total SVOC concentration in the rear of the property at 5,609 (μg/kg). Five of the six deep soil samples collected from the 4-6 foot interval were not detected above the method detection limit with the only observed total SVOC in the deep soil sample from the street side soil boring in the basement detected at 73.7 (μg/kg) . The four soil vapor samples collected did not indicate concentrations that exceeded the NYSDOH guidance values for Evaluating Soil Vapor Intrusion in the State of New York or indoor air guidelines. Low levels of tetrachloroethylene, with a maximum concentration of 26 ($\mu g/m^3$), were detected in one soil vapor sample near the southern property boundary. The detectable concentrations of VOCs in soil vapor were below the NYSDOH guidance values including the exhibited concentrations of tetrachloroethylene.

Receptor Populations

On-Site Receptors: The site is currently a vacant 3-story residential apartment building with a full basement and a detached garage and access to the Site is restricted by on-site security. Onsite receptors are limited to security personnel and employees of a rental car agency using the open areas for rental car storage. During construction, potential on-site receptors include construction workers, site representatives, and visitors. Under proposed future conditions, potential on-site receptors include adult and child building residents, workers and visitors.

Off-Site Receptors: Potential off-site receptors within a 500 foot radius of the Site include adult and child residents; commercial and construction workers; pedestrians; and trespassers based on the following land uses within 500 feet of the Site:

1. Commercial Businesses – existing and future
2. Residential Buildings – existing and future
3. Building Construction/ Renovation – existing and future
4. Pedestrians, Trespassers, Cyclists – existing and future
5. Schools – existing and future

Potential Routes of Exposure

Three potential primary routes exist by which chemicals can enter the body: ingestion, inhalation, and dermal absorption. Exposure can occur based on the following potential media:

- Ingestion of groundwater or fill/ soil;
- Inhalation of vapors or particulates; and
- Dermal absorption of groundwater or fill/ soil.

Potential Exposure Points

Current Conditions: The site is currently capped with concrete there are no potential exposure pathways from ingestion, inhalation, or dermal absorption of soil/ fill. Groundwater is not exposed at the site. The site is served by the public water supply and groundwater is not used at the site for potable supply and there is no potential for exposure. At the property there is one vacant 3-story residential apartment building with a full basement, which has the potential for vapor intrusion. However, access is limited by the use of on-site security and no residents occupy the property.

Construction/ Remediation Conditions: During the remedial action, onsite workers will come into direct contact with surface and subsurface soils as a result of on-Site construction and excavation activities. On-Site construction workers potentially could ingest, inhale or have dermal contact with exposed impacted soil and fill. Similarly, off-Site receptors could be exposed to dust and vapors from on-Site activities. Due to the depth of groundwater, direct contact with groundwater is not expected. During construction, on-Site and off-Site exposures to

contaminated dust from on-Site will be addressed through the Soil/Materials Management Plan, dust controls, and through the implementation of the Community Air-Monitoring Program and a Construction Health and Safety Plan.

Proposed Future Conditions: Under future remediated conditions, all soils in excess of Track 4 SCOs will be removed. The site will be fully capped, preventing potential direct exposure to soil and groundwater remaining in place, and the engineering controls of a vapor barrier will prevent any potential exposure due to inhalation by preventing soil vapor intrusion. The site is served by the public water supply, and groundwater is not used at the site. There are no plausible off-site pathways for oral, inhalation, or dermal exposure to contaminants derived from the site.

Overall Human Health Exposure Assessment

There are potential complete exposure pathways for the current site condition. There are potential complete exposure pathways that require mitigation during implementation of the remedy. There are no complete exposure pathways under future conditions after the site is developed. This assessment takes into consideration the reasonably anticipated use of the site, which includes a residential structure, site-wide surface cover, and a subsurface vapor barrier system for the building. Under current conditions, on-Site exposure pathways exist for those with access to the Site and trespassers. During remedial construction, on-Site and off-Site exposures to contaminated dust from historic fill material will be addressed through dust controls, and through the implementation of the Community Air Monitoring Program, the Soil/Materials Management Plan, and a Construction Health and Safety Plan. Potential post-construction use of groundwater is not considered an option because groundwater in this area of New York City is not used as a potable water source. There are no surface waters in close proximity to the Site that could be impacted or threatened.

5.0 Remedial Action Management

5.1 Project Organization and Oversight

Principal personnel who will participate in the remedial action include Yisong Yang (ACT) as the designated Site Safety Officer, Timothy Young (ACT) as the alternate Site Safety Officer and Mark Gelband (ACT) as the Project Manager. The Professional Engineer (PE) and

Qualified Environmental Professionals (QEP) for this project are Andrew R. Levenbaum and Paul P. Stewart, respectively.

5.2 Site Security

Site access will be controlled by a construction fence and gated entryway.

5.3 Work Hours

The hours for operation of cleanup will comply with the NYC Department of Buildings construction code requirements or according to specific variances issued by that agency. The hours of operation will be conveyed to OER during the pre-construction meeting.

5.4 Construction Health and Safety Plan

The Health and Safety Plan is included in Appendix 5. The Site Safety Coordinator will be Yisong Yang. Remedial work performed under this RAWP will be in full compliance with applicable health and safety laws and regulations, including Site and OSHA worker safety requirements and HAZWOPER requirements. Confined space entry, if any, will comply with OSHA requirements and industry standards and will address potential risks. The parties performing the remedial construction work will ensure that performance of work is in compliance with the HASP and applicable laws and regulations. The HASP pertains to remedial and invasive work performed at the Site until the issuance of the Notice of Completion.

All field personnel involved in remedial activities will participate in training required under 29 CFR 1910.120, such as 40-hour hazardous waste operator training and annual 8-hour refresher training. Site Safety Officer will be responsible for maintaining workers training records. Personnel entering any exclusion zone will be trained in the provisions of the HASP and will comply with all requirements of 29 CFR 1910.120. Site-specific training will be provided to field personnel. Additional safety training may be added depending on the tasks performed. Emergency telephone numbers will be posted at the site location before any remedial work begins. A safety meeting will be conducted before each shift begins. Topics to be discussed include task hazards and protective measures (physical, chemical, environmental); emergency

procedures; PPE levels and other relevant safety topics. Meetings will be documented in a log book or specific form.

An emergency contact sheet with names and phone numbers is included in the CHASP. That document will define the specific project contacts for use in case of emergency.

5.5 Community Air Monitoring Plan

Real-time air monitoring for volatile organic compounds (VOCs) and particulate levels at the perimeter of the exclusion zone or work area will be performed. Continuous monitoring will be performed for all ground intrusive activities and during the handling of contaminated or potentially contaminated media. Ground intrusive activities include, but are not limited to, soil/waste excavation and handling, test pit excavation or trenching, and the installation of soil borings or monitoring wells.

Periodic monitoring for VOCs will be performed during non-intrusive activities such as the collection of soil and sediment samples or the collection of groundwater samples from existing monitoring wells. Periodic monitoring during sample collection, for instance, will consist of taking a reading upon arrival at a sample location, monitoring while opening a well cap or overturning soil, monitoring during well bailing/purging, and taking a reading prior to leaving a sample location. Depending upon the proximity of potentially exposed individuals, continuous monitoring may be performed during sampling activities. Examples of such situations include groundwater sampling at wells on the curb of a busy urban street, in the midst of a public park, or adjacent to a school or residence. Exceedances of action levels observed during performance of the Community Air Monitoring Plan (CAMP) will be reported to the OER Project Manager and included in the Daily Report.

VOC Monitoring, Response Levels, and Actions

Volatile organic compounds (VOCs) will be monitored at the downwind perimeter of the immediate work area (i.e., the exclusion zone) on a continuous basis during invasive work. Upwind concentrations will be measured at the start of each workday and periodically thereafter to establish background conditions. The monitoring work will be performed using equipment appropriate to measure the types of contaminants known or suspected to be present. The equipment will be calibrated at least daily for the contaminant(s) of concern or for an appropriate

surrogate. The equipment will be capable of calculating 15-minute running average concentrations, which will be compared to the levels specified below.

- If the ambient air concentration of total organic vapors at the downwind perimeter of the work area or exclusion zone exceeds 5 parts per million (ppm) above background for the 15-minute average, work activities will be temporarily halted and monitoring continued. If the total organic vapor level readily decreases (per instantaneous readings) below 5 ppm over background, work activities will resume with continued monitoring.
- If total organic vapor levels at the downwind perimeter of the work area or exclusion zone persist at levels in excess of 5 ppm over background but less than 25 ppm, work activities will be halted, the source of vapors identified, corrective actions taken to abate emissions, and monitoring continued. After these steps, work activities will resume provided that the total organic vapor level 200 feet downwind of the exclusion zone or half the distance to the nearest potential receptor or residential/commercial structure, whichever is less - but in no case less than 20 feet, is below 5 ppm over background for the 15-minute average.
- If the organic vapor level is above 25 ppm at the perimeter of the work area, activities will be shutdown.

All 15-minute readings must be recorded and be available for OER personnel to review. Instantaneous readings, if any, used for decision purposes will also be recorded.

Particulate Monitoring, Response Levels, and Actions

Particulate concentrations will be monitored continuously at the upwind and downwind perimeters of the exclusion zone at temporary particulate monitoring stations. The particulate monitoring will be performed using real-time monitoring equipment capable of measuring particulate matter less than 10 micrometers in size (PM-10) and capable of integrating over a period of 15 minutes (or less) for comparison to the airborne particulate action level. The equipment will be equipped with an audible alarm to indicate exceedance of the action level. In addition, fugitive dust migration should be visually assessed during all work activities.

- If the downwind PM-10 particulate level is 100 micrograms per cubic meter (mcg/m3) greater than background (upwind perimeter) for the 15-minute period or if airborne dust is observed leaving the work area, then dust suppression techniques will be employed.

Work will continue with dust suppression techniques provided that downwind PM-10 particulate levels do not exceed 150 mcg/m3 above the upwind level and provided that no visible dust is migrating from the work area.

- If, after implementation of dust suppression techniques, downwind PM-10 particulate levels are greater than 150 mcg/m3 above the upwind level, work will be stopped and a re-evaluation of activities initiated. Work will resume provided that dust suppression measures and other controls are successful in reducing the downwind PM-10 particulate concentration to within 150 mcg/m3 of the upwind level and in preventing visible dust migration.

All readings will be recorded and be available for OER personnel to review.

5.6 Agency Approvals

All permits or government approvals required for remedial construction have been or will be obtained prior to the start of remedial construction. Approval of this RAWP by OER does not constitute satisfaction of these requirements and will not be a substitute for any required permit.

5.7 Site Preparation

Pre-Construction Meeting

OER will be invited to attend the pre-construction meeting at the Site with all parties involved in the remedial process prior to the start of remedial construction activities.

Mobilization

Mobilization will be conducted as necessary for each phase of work at the Site. Mobilization includes field personnel orientation, equipment mobilization (including securing all sampling equipment needed for the field investigation), marking/staking sampling locations and utility mark-outs. Each field team member will attend an orientation meeting to become familiar with the general operation of the Site, health and safety requirements, and field procedures.

Utility Marker Layouts, Easement Layouts

The presence of utilities and easements on the Site will be fully investigated prior to the performance of invasive work such as excavation or drilling under this plan by using, at a

minimum, the One-Call System (811). Underground utilities may pose an electrocution, explosion, or other hazard during excavation or drilling activities. All invasive activities will be performed incompliance with applicable laws and regulations including NYC Building Code to assure safety. Utility companies and other responsible authorities will be contacted to locate and mark the locations, and a copy of the Mark-Out Ticket will be retained by the contractor prior to the start of drilling, excavation or other invasive subsurface operations. Overhead utilities may also be present within the anticipated work zones. Electrical hazards associated with drilling in the vicinity of overhead utilities will be prevented by maintaining a safe distance between overhead power lines and drill rig masts.

Proper safety and protective measures pertaining to utilities and easements, and compliance with all laws and regulations will be employed during invasive and other work contemplated under this RAWP. The integrity and safety of on-Site and off-Site structures will be maintained during all invasive, excavation or other remedial activity performed under the RAWP.

Dewatering

Dewatering is not anticipated during remediation and construction.

Equipment and Material Staging

Equipment and materials will be stored and staged in a manner that complies with applicable laws and regulations.

Stabilized Construction Entrance

Steps will be taken to ensure that trucks departing the site will not track soil, fill or debris off-Site. Such actions may include use of cleaned asphalt or concrete pads or use of stone or other aggregate-based egress paths between the truck inspection station and the property exit. Measures will be taken to ensure that adjacent roadways will be kept clean of project related soils, fill and debris.

Truck Inspection Station

An outbound-truck inspection station will be set up close to the Site exit. Before exiting the Site, trucks will be required to stop at the truck inspection station and will be examined for evidence

of contaminated soil on the undercarriage, body, and wheels. Soil and debris will be removed. Brooms, shovels and clean water will be utilized for the removal of soil from vehicles and equipment, as necessary.

Extreme Storm Preparedness and Response Contingency Plan

Damage from flooding or storm surge can include dislocation of soil and stockpiled materials, dislocation of site structures and construction materials and equipment, and dislocation of support of excavation structures. Damage from wind during an extreme storm event can create unsafe or unstable structures, damage safety structures and cause downed power lines creating dangerous site conditions and loss of power. In the event of emergency conditions caused by an extreme storm event, the enrollee will undertake the following steps for site preparedness prior to the event and response after the event.

Storm Preparedness

Preparations in advance of an extreme storm event will include the following: containerized hazardous materials and fuels will be removed from the property; loose materials will be secured to prevent dislocation and blowing by wind or water; heavy equipment such as excavators and generators will be removed from excavated areas, trenches and depressions on the property to high ground or removed from the property; an inventory of the property with photographs will be performed to establish conditions for the site and equipment prior to the event; stockpile covers for soil and fill will be secured by adding weights such as sandbags for added security and worn or ripped stockpile covers will be replaced with competent covers; stockpiled hazardous wastes will be removed from the property; stormwater management systems will be inspected and fortified, including, as necessary: clean and reposition silt fences, hay bales; clean storm sewer filters and traps; and secure and protect pumps and hosing.

Storm Response

At the conclusion of an extreme storm event, as soon as it is safe to access the property, a complete inspection of the property will be performed. A site inspection report will be submitted to OER at the completion of site inspection and after the site security is assessed. Site conditions will be compared to the inventory of site conditions and material performed prior to the storm

event and significant differences will be noted. Damage from storm conditions that result in acute public safety threats, such as downed power lines or imminent collapse of buildings, structures or equipment will be reported to public safety authorities via appropriate means such as calling 911. Petroleum spills will be reported to NYS DEC within 2 hours of identification and consistent with State regulations. Emergency and spill conditions will also be reported to OER. Public safety structures, such as construction security fences will be repaired promptly to eliminate public safety threats. Debris will be collected and removed. Dewatering will be performed in compliance with existing laws and regulations and consistent with emergency notifications, if any, from proper authorities. Eroded areas of soil including unsafe slopes will be stabilized and fortified. Dislocated materials will be collected and appropriately managed. Support of excavation structure will be inspected and fortified as necessary. Impacted stockpiles will be contained and damaged stockpile covers will be replaced. Stormwater control systems and structures will be inspected and maintained as necessary. If soil or fill materials are discharged off site to adjacent properties, property owners and OER will be notified and corrective measure plan designed to remove and clean dislocated material will be submitted to OER and implemented following approval by OER and granting of site access by the property owner. Impacted offsite areas may require characterization based on site conditions, at the discretion of OER. If onsite petroleum spills are identified, a qualified environmental professional will determine the nature and extent of the spill and report to NYS DEC's spill hotline at DEC 800-457-7362 within statutory defined timelines. If the source of the spill is ongoing and can be identified, it should be stopped if this can be done safely. Potential hazards will be addressed immediately, consistent with guidance issued by NYS DEC.

Storm Response Reporting

A site inspection report will be submitted to OER at the completion of site inspection. An inspection report established by OER is available on OER's website (www.nyc.gov/oer) and will be used for this purpose. Site conditions will be compared to the inventory of site conditions and material performed prior to the storm event and significant differences will be noted. The site inspection report will be sent to the OER project manager and will include the site name, address, tax block and lot, site primary and alternate contact name and phone number. Damage and soil release assessment will include: whether the project had stockpiles; whether stockpiles

were damaged; photographs of damage and notice of plan for repair; report of whether soil from the site was dislocated and whether any of the soil left the site; estimates of the volume of soil that left the site, nature of impact, and photographs; description of erosion damage; description of equipment damage; description of damage to the remedial program or the construction program, such as damage to the support of excavation; presence of onsite or offsite exposure pathways caused by the storm; presence of petroleum or other spills and status of spill reporting to NYS DEC; description of corrective actions; schedule for corrective actions. This report should be completed and submitted to OER project manager with photographs within 24 hours of the time of safe entry to the property after the storm event.

5.8 Traffic Control

Drivers of trucks leaving the Site with soil/fill will be instructed to proceed without stopping in the vicinity of the Site to prevent neighborhood impacts. The planned route on local roads for trucks leaving the site has not been determined because the appropriate disposal facility has not been selected.

5.9 Demobilization

Demobilization will include:

- As necessary, restoration of temporary access areas and areas that may have been disturbed to accommodate support areas (e.g., staging areas, decontamination areas, storage areas, temporary water management areas, and access area);
- Removal of sediment from erosion control measures and truck wash and disposal of materials in accordance with applicable laws and regulations;
- Equipment decontamination, and;
- General refuse disposal.

Equipment will be decontaminated and demobilized at the completion of all field activities. Investigation equipment and large equipment (e.g., soil excavators) will be washed at the truck inspection station as necessary. In addition, all investigation and remediation derived waste will be appropriately disposed.

5.10 Reporting and Record Keeping

Daily reports

Daily reports providing a general summary of activities for each day of active remedial work will be emailed to the OER Project Manager by the end of the following business day. Those reports will include:

- Project number and statement of the activities and an update of progress made and locations of excavation and other remedial work performed;
- Quantities of material imported and exported from the Site;
- Status of on-Site soil/fill stockpiles;
- A summary of all citizen complaints, with relevant details (basis of complaint; actions taken; etc.);
- A summary of CAMP results noting all excursions. CAMP data may be reported;
- Photograph of notable Site conditions and activities.

The frequency of the reporting period may be revised in consultation with OER project manager based on planned project tasks. Daily email reports are not intended to be the primary mode of communication for notification to OER of emergencies (accidents, spills), requests for changes to the RAWP or other sensitive or time critical information. However, such information will be included in the daily reports. Emergency conditions and changes to the RAWP will be communicated directly to the OER project manager by personal communication. Daily reports will be included as an Appendix in the Remedial Action Report.

Record Keeping and Photo Documentation

Job-site record keeping for all remedial work will be performed. These records will be maintained on-Site during the project and will be available for inspection by OER staff. Representative photographs will be taken of the Site prior to any remedial activities and during major remedial activities to illustrate remedial program elements and contaminant source areas. Photographs will be submitted at the completion of the project in the RAR in digital format (i.e. jpeg files).

5.11 Complaint Management

All complaints from citizens will be promptly reported to OER. Complaints will be addressed and outcomes will also be reported to OER in daily reports. Notices to OER will include the nature of the complaint, the party providing the complaint, and the actions taken to resolve any problems.

5.12 Deviations From The Remedial Action Work Plan

All changes to the RAWP will be reported to, and approved by, the OER Project Manager and will be documented in daily reports and reported in the Remedial Action Report. The process to be followed if there are any deviations from the RAWP will include a request for approval for the change from OER noting the following:

- Reasons for deviating from the approved RAWP;
- Effect of the deviations on overall remedy; and
- Determination with basis that the remedial action with the deviation(s) is protective of public health and the environment.

6.0 Remedial Action Report

A Remedial Action Report (RAR) will be submitted to OER following implementation of the remedial action defined in this RAWP. The RAR will document that the remedial work required under this RAWP has been completed and has been performed in compliance with this plan. The RAR will include:

- Information required by this RAWP;
- Text description with thorough detail of all engineering and institutional controls (if Track 1 remedial action is not achieved)
- As-built drawings for all constructed remedial elements;
- Manifests for all soil or fill disposal;
- Photographic documentation of remedial work performed under this remedy;
- Site Management Plan;
- Description of any changes in the remedial action from the elements provided in this RAWP and associated design documents;

- Tabular summary of all end point sampling results (including all soil test results from the remedial investigation for soil that will remain on site) and all soil/fill waste characterization results, QA/QC results for end-point sampling, and other sampling and chemical analysis performed as part of the remedial action;
- Test results or other evidence demonstrating that remedial systems are functioning properly;
- Account of the source area locations and characteristics of all soil or fill material removed from the Site including a map showing the location of these excavations and hotspots, tanks or other contaminant source areas;
- Full accounting of the disposal destination of all contaminated material removed from the Site. Documentation associated with disposal of all material will include transportation and disposal records, and letters approving receipt of the material;
- Account of the origin and required chemical quality testing for material imported onto the Site;
- Continue registration of the property with an E-Designation by the NYC Department of Buildings;
- The RAWP and Remedial Investigation Report will be included as appendices to the RAR;
- Reports and supporting material will be submitted in digital form and final PDF's will include bookmarks for each appendix.

Remedial Action Report Certification

I, [name], am currently a registered professional engineer licensed by the State of New York. I performed professional engineering services and had primary direct responsibility for implementation of the remedial program for the [site name (address)] site, site number [VCP site number]. I certify to the following:

- I have reviewed this document, to which my signature and seal are affixed.
- Engineering Controls implemented during this remedial action were designed by me or a person under my direct supervision and achieve the goals established in the Remedial Action Work Plan for this site.
- The Engineering Controls constructed during this remedial action were professionally observed by me or by a person under my direct supervision and (1) are consistent with the Engineering Control design established in the Remedial action Work Plan and (2) are accurately reflected in the text and drawings for as-built design reported in this Remedial Action Report.
- The OER-approved Remedial Action Work Plan dated [date] and Stipulations in a letter dated [date] were implemented and that all requirements in those documents have been substantively complied with. I certify that contaminated soil, fill, liquids or other material from the property were taken to facilities licensed to accept this material in full compliance with applicable laws and regulations.

Name

PE License Number

Signature

Date

PE Stamp

I, [name], am a Qualified Environmental Professional. I had primary direct responsibility for implementation of the remedial program for the [site name (address)]site, site number [VCP site number]. I certify to the following:

- The OER-approved Remedial Action Work Plan dated August 15, 2012 and Stipulations in a letter dated September 10, 2014 were implemented and that all requirements in those documents have been substantively complied with. I certify that contaminated soil, fill, liquids or other material from the property were taken to facilities licensed to accept this material in full compliance with applicable laws and regulations.

QEP Name

QEP Signature

Date

7.0 Schedule

The table below presents a schedule for the proposed remedial action and reporting. If the schedule for remediation and development activities changes, it will be updated and submitted to OER. Currently, a 28 month remediation period is anticipated.

Schedule Milestone	**Weeks from Remedial Action Start**	**Duration (weeks)**
OER Approval of RAWP	0	-
Fact Sheet 2 announcing start of remedy	0	-
Mobilization	1	1
Remedial Excavation	2	24
Demobilization	26	2
Submit Remedial Action Report		

Figure 1

Locational Diagram

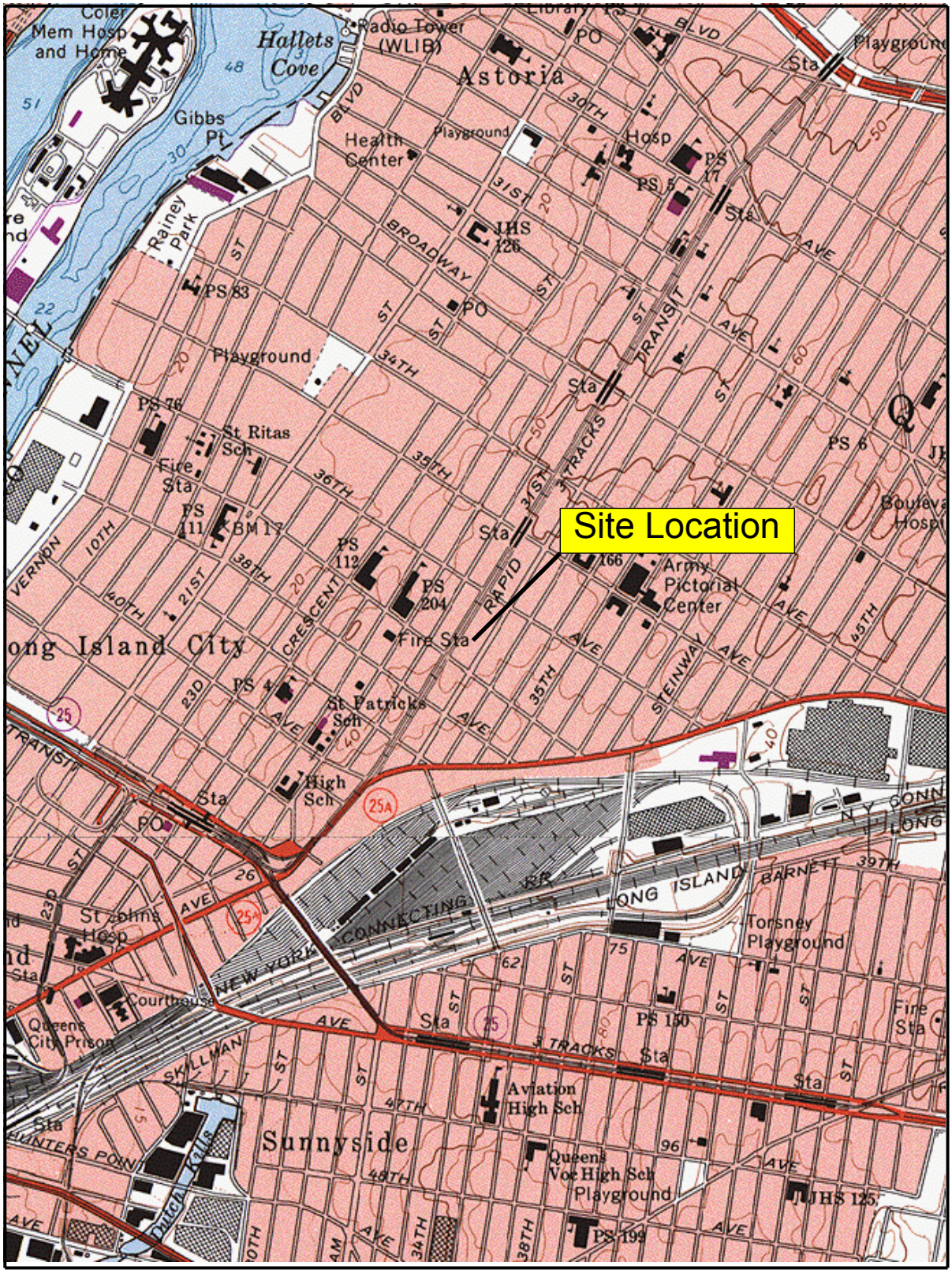

From USGS 7.7 Minute Topographic
Central Park, NY Quadrangle

N

Locational Diagram

Advanced Cleanup Technologies, Inc.
ENVIRONMENTAL CONSULTANTS
110 Main Street, Suite 103, Port Washington, New York 11050
Tel: 516-441-5800 Fax: 516-441-5511

Project No.: 8459-LINY	Figure No.: 1
Date: 08/13/2015	Scale: Not To Scale

Figure 2

Site Diagram

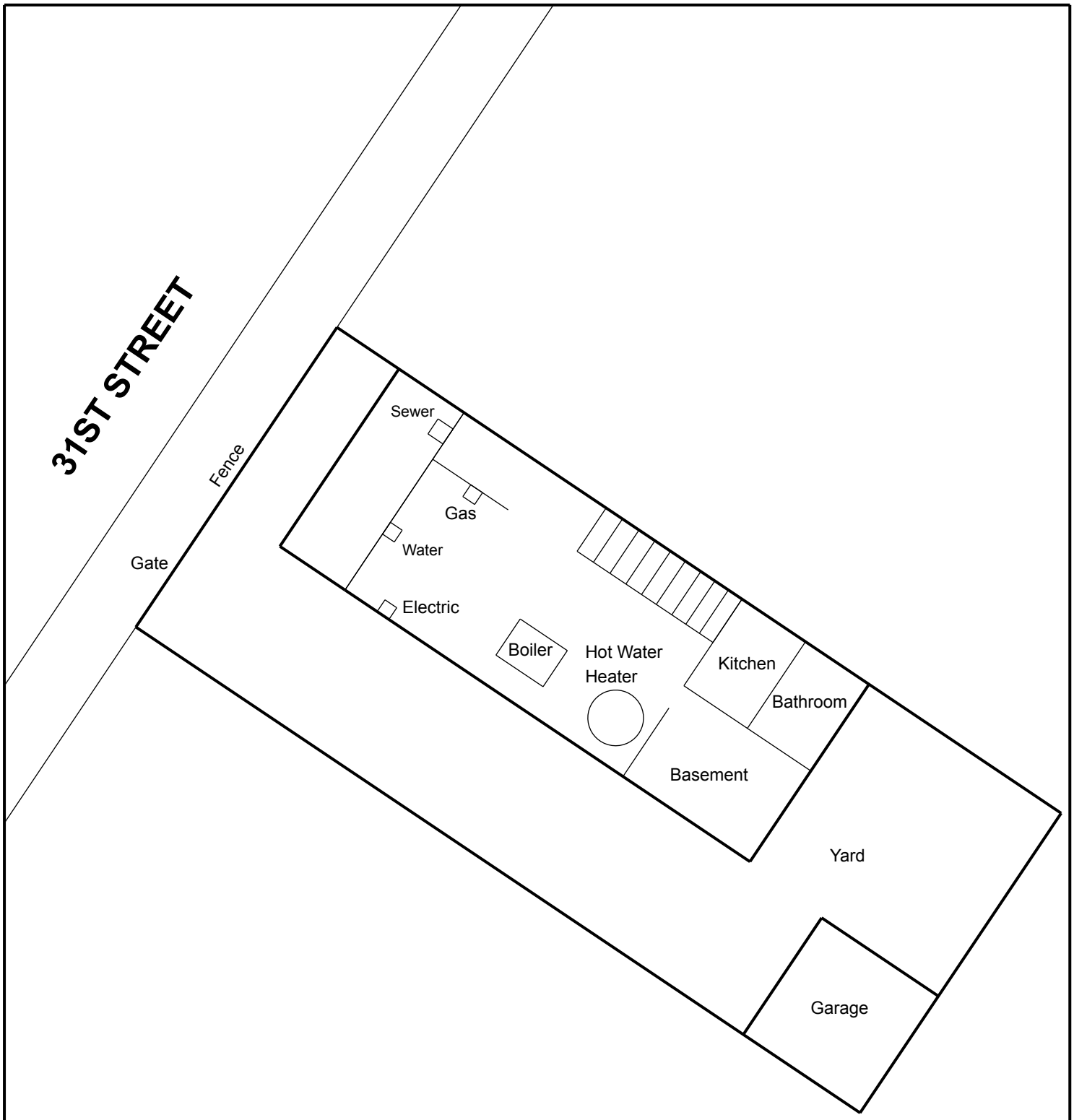

Site Diagram

Advanced Cleanup Technologies, Inc.
ENVIRONMENTAL CONSULTANTS
110 Main Street, Suite 103, Port Washington, New York 11050
Tel: 516-441-5800 Fax: 516-441-5511

Project No.: 8459-LINY	Figure No.: 2
Date: 08/14/2015	Scale: Not To Scale

Figure 3

Vapor Barrier and Composite Cover Specifications

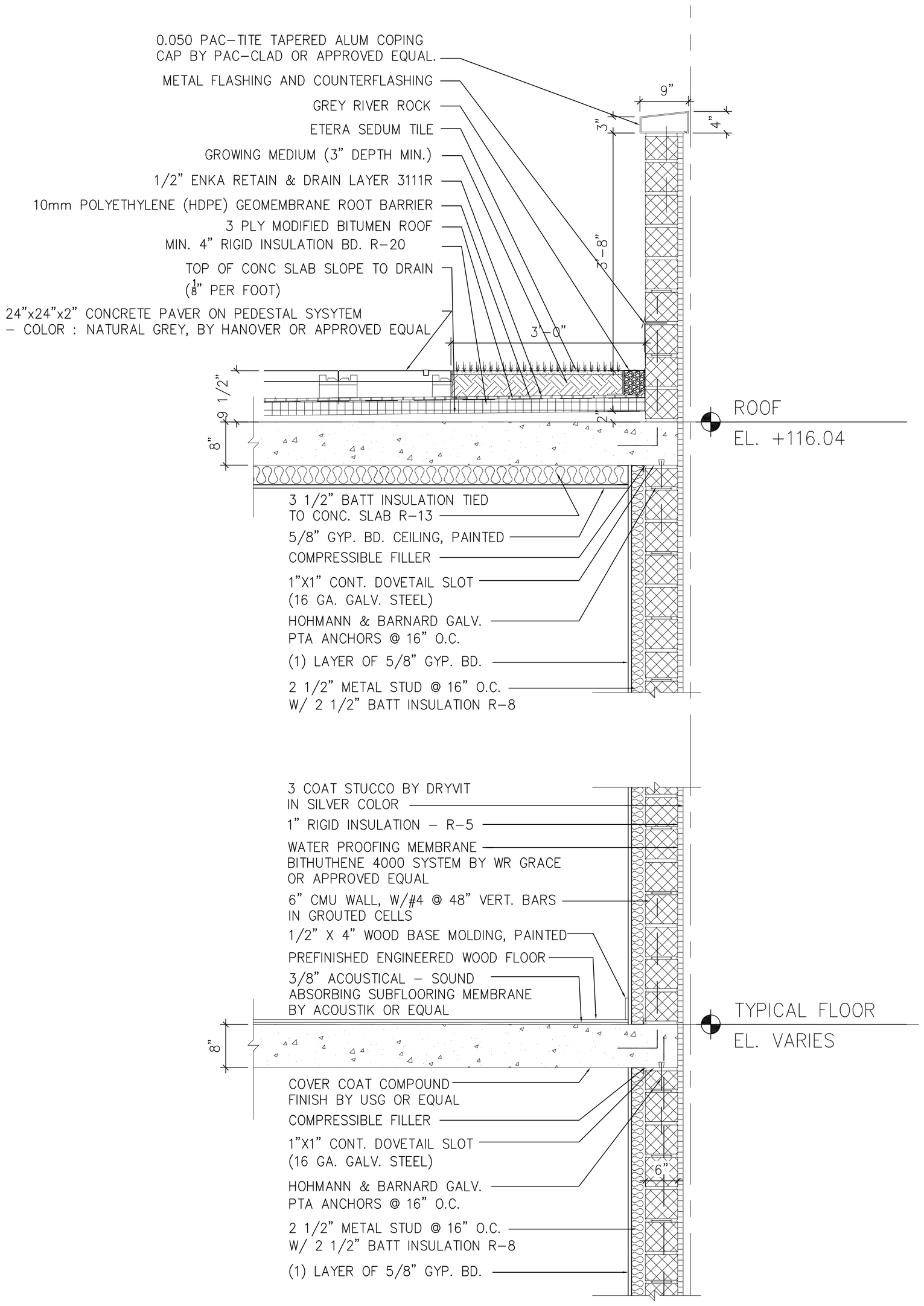

WALL SECTION DETAILS
SCALE: 1" = 1'-0"

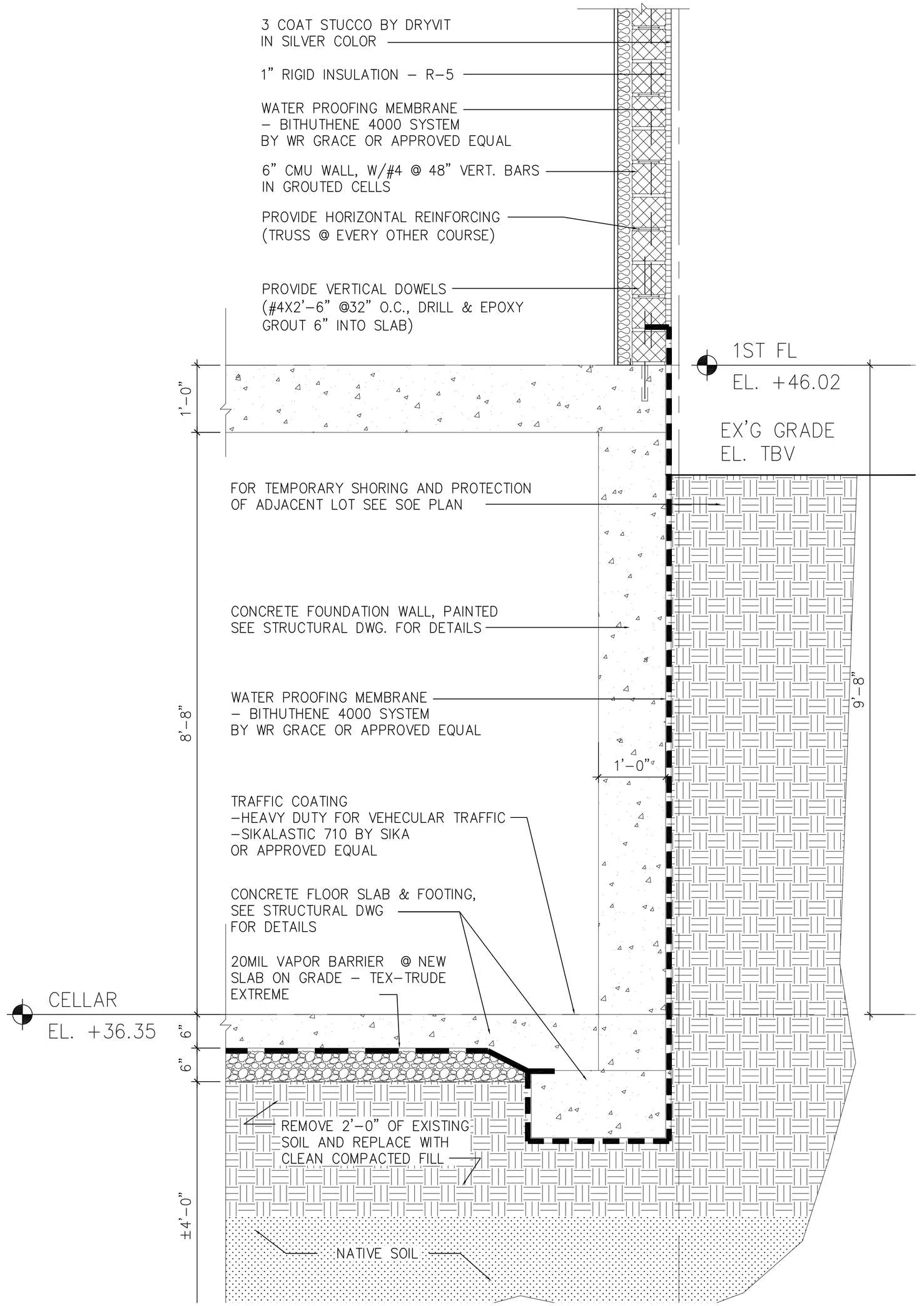

WALL SECTION DETAILS
SCALE: 1" = 1'-0"

ARCHITECT:
MORALI ARCHITECTURE
505 8th AVENUE, SUITE 2202, NEW YORK, NY, 10018
TEL. 212 219 2091 E-MAIL:JMORALI@MORALIARCHITECTURE.COM

IMA ENGINEERING, PC
123-23 82 AVENUE, KEW GARDENS, NY, 11415 TEL: 718 268 8600

ADVANCED CLEANUP TECHNOLOGIES, INC.
110 MAIN STREET, SUITE 103, PORT WASHINGTON, NY, 11050

COPYRIGHT (C)
THESE PLAN ARE AN INSTRUMENT OF SERVICE AND ARE THE PROPERTY OF THE ARCHITECT.
This and all documents produced by this firm under this agreement shall remain the sole property of this firm and may not be used, copied, changed or distributed by the client or others without the written consent of this firm.
INFRINGEMENTS WILL BE PROSECUTED.

CONTRACTOR SHALL VERIFY ALL CONDITIONS AND MEASUREMENTS IN THE FIELD AND BE RESPONSIBLE FOR FIELD FIT AND QUANTITY OF WORK. NO ALLOWANCES SHALL BE MADE IN BEHALF OF THE CONTRACTOR FOR ANY ERROR OR NEGLECT ON HIS PART.

"THIS PLAN IS APPROVED ONLY FOR WORK INDICATED ON THE APPLICATION SPECIFICATION SHEET. ALL OTHER MATTERS SHOWN ARE NOT TO BE RELIED UPON, OR TO BE CONSIDERED AS EITHER BEING APPROVED OR IN ACCORDANCE WITH APPLICABLE CODES."

No.	Description	Date

PROJECT
36-37 31ST STREET
LONG ISLAND CITY, NY
11106

WALL SECTION DETAILS

SCALE : AS NOTED

SEAL:

Date	10.12.15
Project Number	1507
Drawn By	CI
Checked By	AM

A-201.00

Figure 4

Sampling Diagram

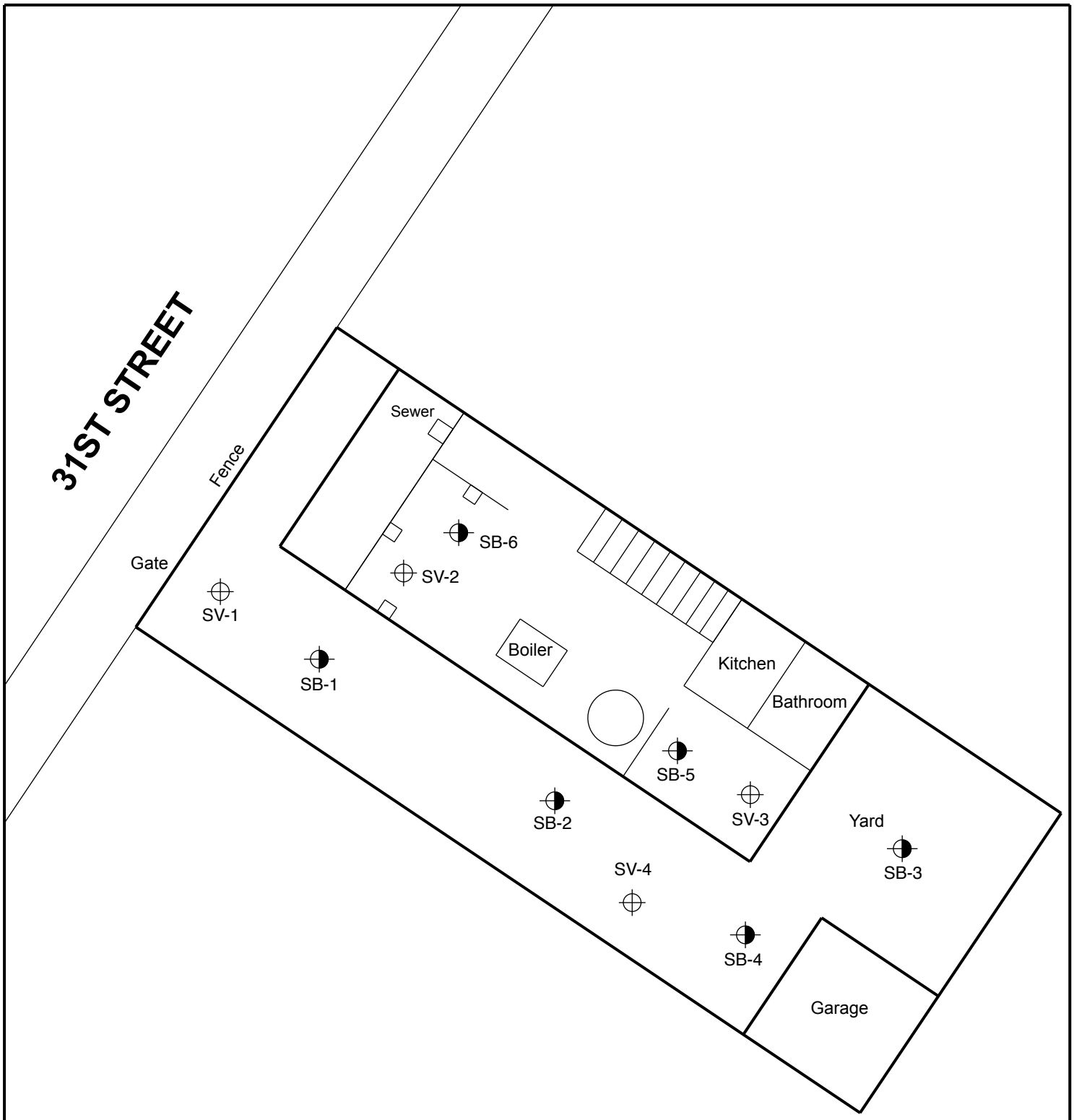

Legend

SB-1 — Soil Boring Location

SV-1 — Soil Vapor Location

N

Sampling Diagram

Advanced Cleanup Technologies, Inc.
ENVIRONMENTAL CONSULTANTS
110 Main Street, Suite 103, Port Washington, New York 11050
Tel: 516-441-5800 Fax: 516-441-5511

Project No.: 8459-LINY	Figure No.: 4
Date: 11/17/2015	Scale: Not To Scale

Figure 5

Metal Soil Cleanup Objectives Exceedances Diagram

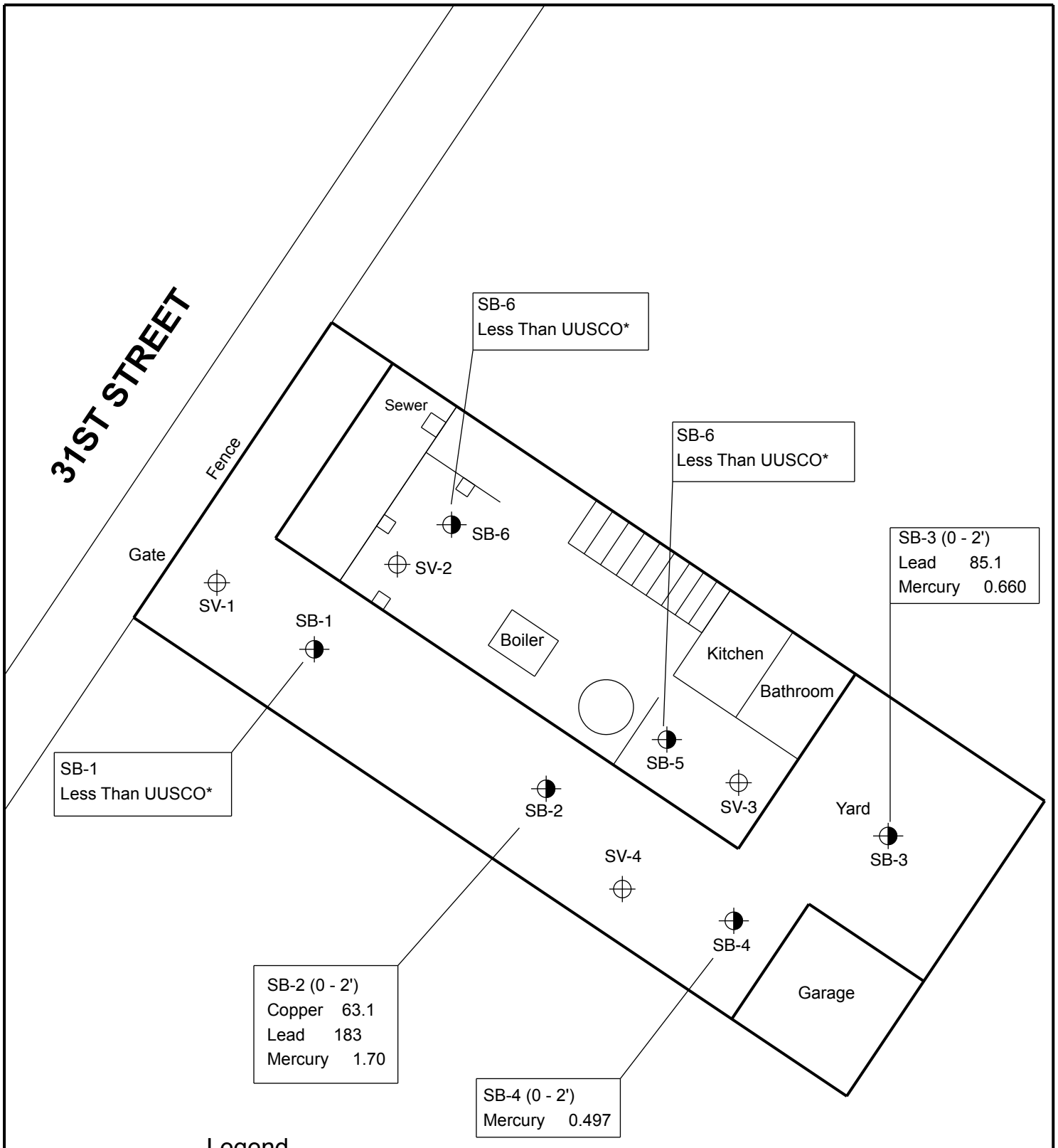

Legend

SB-1 — Soil Boring Location

SV-1 — Soil Vapor Location

UUSCO* — Unresticted Use Soil Cleanup Objective

Metal mg/kg

N

Metal Soil Cleanup Objectives Exceedances Diagram

Advanced Cleanup Technologies, Inc.
ENVIRONMENTAL CONSULTANTS
110 Main Street, Suite 103, Port Washington, New York 11050
Tel: 516-441-5800 Fax: 516-441-5511

Project No.: 8459-LINY	Figure No.: 5
Date: 11/17/2015	Scale: Not To Scale

Figure 6

Endpoint Sampling Diagram

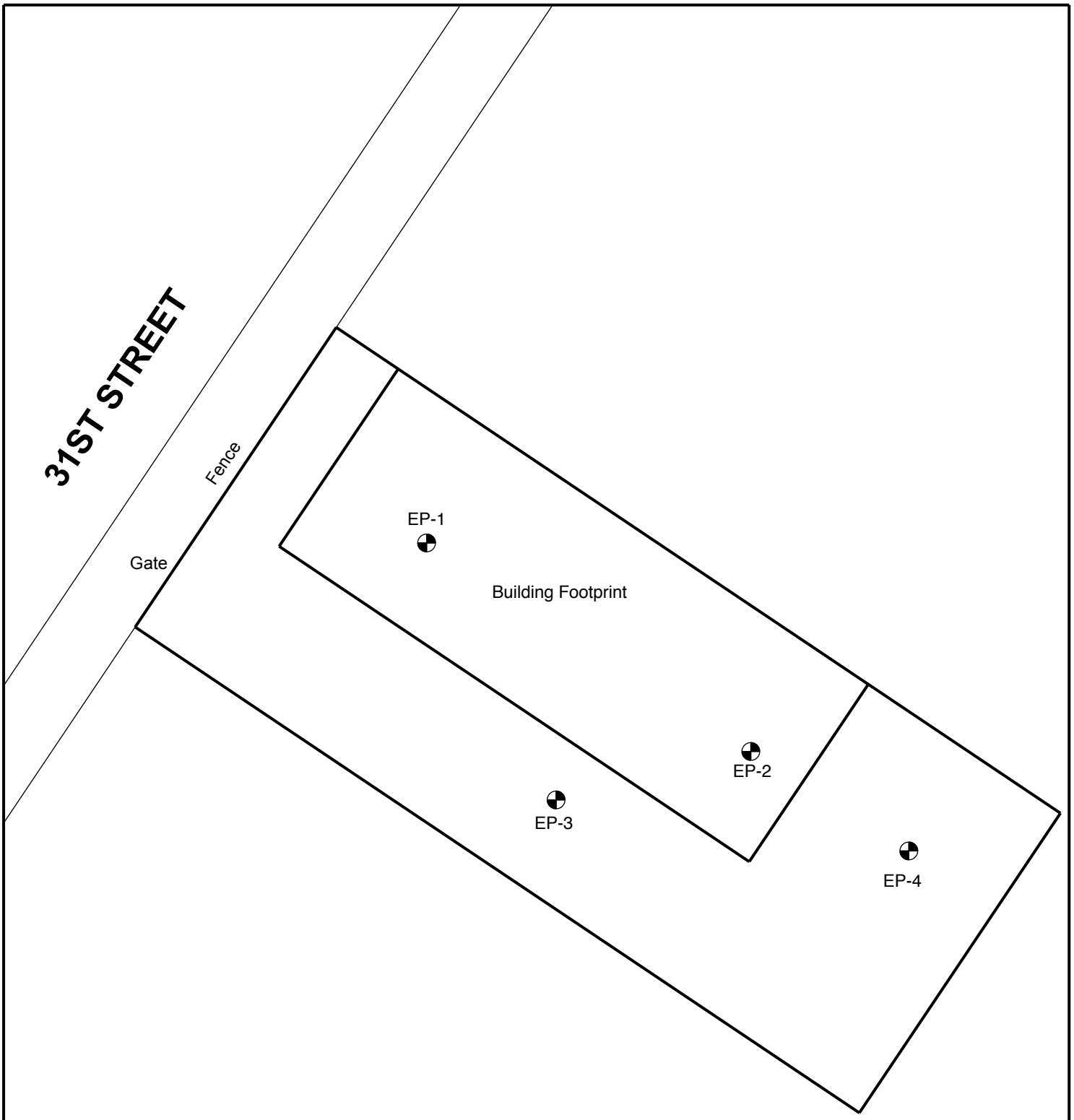

Legend

EP-1 Endpoint Sample Location

N

Endpoint Sampling Diagram

Advanced Cleanup Technologies, Inc.
ENVIRONMENTAL CONSULTANTS
110 Main Street, Suite 103, Port Washington, New York 11050
Tel: 516-441-5800 Fax: 516-441-5511

Project No.: 8459-LINY	Figure No.: 6
Date: 12/03/2015	Scale: Not To Scale

Table 1

Volatile Organic Compounds in Soil (ug/kg-dry)
EPA Method 8260
36-33 31st Street
Long Island City, NY 11106

ACT Project No.: 8459-LINY

Sample ID				SB-1 (0-2')	SB-1 (4-6')	SB-2 (0-2')	SB-2 (4-6')	SB-3 (0-2')	SB-3 (4-6')
Sample Date	UUSCO [1]	RRSCO [2]	CSCO [3]	11/9/15	11/9/15	11/9/15	11/9/15	11/9/15	11/9/15
1,1,1,2-Tetrachloroethane	NS	NS	NS	<2.7	<2.7	<3.0	<3.1	<2.3	<2.5
1,1,1-Trichloroethane	680	100,000	500,000	<2.7	<2.7	<3.0	<3.1	<2.3	<2.5
1,1,2,2-Tetrachloroethane	NS	NS	NS	<2.7	<2.7	<3.0	<3.1	<2.3	<2.5
1,1,2-Trichloro-1,2,2-trifluoroethane	NS	NS	NS	<2.7	<2.7	<3.0	<3.1	<2.3	<2.5
1,1,2-Trichloroethane	NS	NS	NS	<2.7	<2.7	<3.0	<3.1	<2.3	<2.5
1,1-Dichloroethane	270	26,000	240,000	<2.7	<2.7	<3.0	<3.1	<2.3	<2.5
1,1-Dichloroethene	330	100,000	500,000	<2.7	<2.7	<3.0	<3.1	<2.3	<2.5
1,2,4-Trichlorobenzene	NS	NS	NS	<2.7	<2.7	<3.0	<3.1	<2.3	<2.5
1,2,4-Trimethylbenzene	4,700	5,200	19,000	<2.7	<2.7	<3.0	<3.1	<2.3	<2.5
1,2-Dibromo-3-chloropropane	NS	NS	NS	<2.7	<2.7	<3.0	<3.1	<2.3	<2.5
1,2-Dibromoethane	NS	NS	NS	<2.7	<2.7	<3.0	<3.1	<2.3	<2.5
1,2-Dichlorobenzene	1,100	100,000	500,000	<2.7	<2.7	<3.0	<3.1	<2.3	<2.5
1,2-Dichloroethane	20	3,100	30,000	<2.7	<2.7	<3.0	<3.1	<2.3	<2.5
1,2-Dichloropropane	NS	NS	NS	<2.7	<2.7	<3.0	<3.1	<2.3	<2.5
1,3,5-Trimethylbenzene	4,700	5,200	19,000	<2.7	<2.7	<3.0	<3.1	<2.3	<2.5
1,3-Dichlorobenzene	2,400	49,000	280,000	<2.7	<2.7	<3.0	<3.1	<2.3	<2.5
1,4-Dichlorobenzene	1,800	13,000	130,000	<2.7	<2.7	<3.0	<3.1	<2.3	<2.5
1,4-Dioxane	980	1,300	13,000	<53	<54	<60	<62	<47	<51
Cyclohexane	NS	NS	NS	<2.7	<2.7	<3.0	<3.1	<2.3	<2.5
2-Butanone	120	100,000	500,000	<2.7	<2.7	<3.0	<3.1	<2.3	<2.5
2-Hexanone	NS	NS	NS	<2.7	<2.7	<3.0	<3.1	<2.3	<2.5
4-Methyl-2-pentanone	NS	NS	NS	<2.7	<2.7	<3.0	<3.1	<2.3	<2.5
Acetone	50	100,000	500,000	**14**	**12**	**12**	**13**	<4.7	**15**
Acrolein	NS	NS	NS	<5.3	<5.4	<6.0	<6.2	<4.7	<5.1
Acrylonitrile	NS	NS	NS	<2.7	<2.7	<3.0	<3.1	<2.3	<2.5
Benzene	60	4,800	44,000	<2.7	<2.7	<3.0	<3.1	<2.3	<2.5
Bromodichloromethane	NS	NS	NS	<2.7	<2.7	<3.0	<3.1	<2.3	<2.5
Bromoform	NS	NS	NS	<2.7	<2.7	<3.0	<3.1	<2.3	<2.5
Bromomethane	NS	NS	NS	<2.7	<2.7	<3.0	<3.1	<2.3	<2.5
Carbon disulfide	NS	NS	NS	<2.7	<2.7	<3.0	<3.1	<2.3	<2.5
Carbon tetrachloride	760	2,400	22,000	<2.7	<2.7	<3.0	<3.1	<2.3	<2.5
Chlorobenzene	1,100	100,000	500,000	<2.7	<2.7	<3.0	<3.1	<2.3	<2.5
Chloroethane	NS	NS	NS	<2.7	<2.7	<3.0	<3.1	<2.3	<2.5
Chloroform	370	49,000	350,000	<2.7	<2.7	<3.0	<3.1	<2.3	<2.5
Chloromethane	NS	NS	NS	<2.7	<2.7	<3.0	<3.1	<2.3	<2.5
cis-1,2-Dichloroethene	250	100,000	500,000	<2.7	<2.7	<3.0	<3.1	<2.3	<2.5
cis-1,3-Dichloropropene	NS	NS	NS	<2.7	<2.7	<3.0	<3.1	<2.3	<2.5
Dibromochloromethane	NS	NS	NS	<2.7	<2.7	<3.0	<3.1	<2.3	<2.5
Dibromomethane	NS	NS	NS	<2.7	<2.7	<3.0	<3.1	<2.3	<2.5
Dichlorodifluoromethane	NS	NS	NS	<2.7	<2.7	<3.0	<3.1	<2.3	<2.5
Ethylbenzene	1,000	41,000	390,000	<2.7	<2.7	<3.0	<3.1	<2.3	<2.5
Methylcyclohexane	NS	NS	NS	<2.7	<2.7	<3.0	<3.1	<2.3	<2.5
Hexachlorobutadine	NS	NS	NS	<2.7	<2.7	<3.0	<3.1	<2.3	<2.5
Isopropylbenzene	NS	NS	NS	<2.7	<2.7	<3.0	<3.1	<2.3	<2.5
Methyl acetate	NS	NS	NS	<2.7	<2.7	<3.0	<3.1	<2.3	<2.5
Methyl tert-butyl ether	930	100,000	500,000	<2.7	<2.7	<3.0	<3.1	<2.3	<2.5
Methylene chloride	50	100,000	500,000	<5.3	<5.4	<6.0	<6.2	<4.7	<5.1
n-Butylbenzene	NS	NS	NS	<2.7	<2.7	<3.0	<3.1	<2.3	<2.5
1,2,3-Trichlorobenzene	NS	NS	NS	<2.7	<2.7	<3.0	<3.1	<2.3	<2.5
n-Propylbenzene	NS	NS	NS	<2.7	<2.7	<3.0	<3.1	<2.3	<2.5
o-Xylene	NS	NS	NS	<2.7	<2.7	<3.0	<3.1	<2.3	<2.5
p- & m- Xylenes	NS	NS	NS	<5.3	<5.4	<6.0	<6.2	<4.7	<5.1
p-Isopropyltoluene	NS	NS	NS	<2.7	<2.7	<3.0	<3.1	<2.3	<2.5
sec-Butylbenzene	NS	NS	NS	<2.7	<2.7	<3.0	<3.1	<2.3	<2.5
Styrene	NS	NS	NS	<2.7	<2.7	<3.0	<3.1	<2.3	<2.5
tert-Butyl alcohol (TBA)	NS	NS	NS	<2.7	<5.4	<6.0	<6.2	<4.7	<5.1
tert-Butylbenzene	NS	NS	NS	<2.7	<2.7	<3.0	<3.1	<2.3	<2.5
Tetrachloroethene	1,300	19,000	150,000	<2.7	<2.7	<3.0	<3.1	<2.3	<2.5
Toluene	700	100,000	500,000	<2.7	<2.7	**3.2**	**3.3**	<2.3	<2.5
trans-1,2-Dichloroethene	100,000	100,000	500,000	<2.7	<2.7	<3.0	<3.1	<2.3	<2.5
trans-1,3-Dichloropropene	NS	NS	NS	<2.7	<2.7	<3.0	<3.1	<2.3	<2.5
Trichloroethene	470	21,000	200,000	<2.7	<2.7	<3.0	<3.1	<2.3	<2.5
Trichlorofluoromethane	NS	NS	NS	<2.7	<2.7	<3.0	<3.1	<2.3	<2.5
Vinyl chloride	20	900	13,000	<2.7	<2.7	<3.0	<3.1	<2.3	<2.5
Xylenes (Total)	260	100,000	500,000	<8.0	<8.1	<9.0	<9.3	<7.0	<7.6

[1] Unrestricted Use Soil Cleanup Objectives, Table 375-6.8(a), 6 NYCRR 375, NYSDEC 2006
[2] Restricted Residential Soil Cleanup Objectives, Table 375-6.8(b), 6 NYCRR 375, NYSDEC 2006
[3] Commercial Soil Cleanup Objectives, Table 375-6.8(b), 6 NYCRR 375, NYSDEC 2006
Bolded values signify detection above method detection limit
Highlighted values signify exceedance of Commercial Soil Cleanup Values
NS = No Standard

Table 1 Continued

Volatile Organic Compounds in Soil (ug/kg-dry)
EPA Method 8260
36-33 31st Street
Long Island City, NY 11106

ACT Project No.: 8459-LINY

Sample ID				SB-4 (0-2')	SB-4 (4-6')	SB-5 (0-2')	SB-5 (4-6')	SB-6 (0-2')	SB-6 (4-6')
Sample Date	UUSCO [1]	RRSCO [2]	CSCO [3]	11/9/15	11/9/15	11/10/15	11/10/15	11/10/15	11/10/15
1,1,1,2-Tetrachloroethane	NS	NS	NS	<2.8	<2.9	<2.8	<2.6	<2.8	<2.5
1,1,1-Trichloroethane	680	100,000	500,000	<2.8	<2.9	<2.8	<2.6	<2.8	<2.5
1,1,2,2-Tetrachloroethane	NS	NS	NS	<2.8	<2.9	<2.8	<2.6	<2.8	<2.5
1,1,2-Trichloro-1,2,2-trifluoroethane	NS	NS	NS	<2.8	<2.9	<2.8	<2.6	<2.8	<2.5
1,1,2-Trichloroethane	NS	NS	NS	<2.8	<2.9	<2.8	<2.6	<2.8	<2.5
1,1-Dichloroethane	270	26,000	240,000	<2.8	<2.9	<2.8	<2.6	<2.8	<2.5
1,1-Dichloroethene	330	100,000	500,000	<2.8	<2.9	<2.8	<2.6	<2.8	<2.5
1,2,4-Trichlorobenzene	NS	NS	NS	<2.8	<2.9	<2.8	<2.6	<2.8	<2.5
1,2,4-Trimethylbenzene	4,700	5,200	19,000	<2.8	<2.9	<2.8	<2.6	<2.8	<2.5
1,2-Dibromo-3-chloropropane	NS	NS	NS	<2.8	<2.9	<2.8	<2.6	<2.8	<2.5
1,2-Dibromoethane	NS	NS	NS	<2.8	<2.9	<2.8	<2.6	<2.8	<2.5
1,2-Dichlorobenzene	1,100	100,000	500,000	<2.8	<2.9	<2.8	<2.6	<2.8	<2.5
1,2-Dichloroethane	20	3,100	30,000	<2.8	<2.9	<2.8	<2.6	<2.8	<2.5
1,2-Dichloropropane	NS	NS	NS	<2.8	<2.9	<2.8	<2.6	<2.8	<2.5
1,3,5-Trimethylbenzene	4,700	5,200	19,000	<2.8	<2.9	<2.8	<2.6	<2.8	<2.5
1,3-Dichlorobenzene	2,400	49,000	280,000	<2.8	<2.9	<2.8	<2.6	<2.8	<2.5
1,4-Dichlorobenzene	1,800	13,000	130,000	<2.8	<2.9	<2.8	<2.6	<2.8	<2.5
1,4-Dioxane	980	1,300	13,000	<55	<59	<56	<53	<56	<50
Cyclohexane	NS	NS	NS	<2.8	<2.9	<2.8	<2.6	<2.8	<2.5
2-Butanone	120	100,000	500,000	<2.8	<2.9	<2.8	<2.6	<2.8	<2.5
2-Hexanone	NS	NS	NS	<2.8	<2.9	<2.8	<2.6	<2.8	<2.5
4-Methyl-2-pentanone	NS	NS	NS	<2.8	<2.9	<2.8	<2.6	<2.8	<2.5
Acetone	50	100,000	500,000	**9.3**	<5.9	**8.2**	**7.8**	**8.2**	**6.7**
Acrolein	NS	NS	NS	<5.5	<2.9	<5.6	<5.3	<5.6	<5.0
Acrylonitrile	NS	NS	NS	<2.8	<2.9	<2.8	<2.6	<2.8	<2.5
Benzene	60	4,800	44,000	<2.8	<2.9	<2.8	<2.6	<2.8	<2.5
Bromodichloromethane	NS	NS	NS	<2.8	<2.9	<2.8	<2.6	<2.8	<2.5
Bromoform	NS	NS	NS	<2.8	<2.9	<2.8	<2.6	<2.8	<2.5
Bromomethane	NS	NS	NS	<2.8	<2.9	<2.8	<2.6	<2.8	<2.5
Carbon disulfide	NS	NS	NS	<2.8	<2.9	<2.8	<2.6	<2.8	<2.5
Carbon tetrachloride	760	2,400	22,000	<2.8	<2.9	<2.8	<2.6	<2.8	<2.5
Chlorobenzene	1,100	100,000	500,000	<2.8	<2.9	<2.8	<2.6	<2.8	<2.5
Chloroethane	NS	NS	NS	<2.8	<2.9	<2.8	<2.6	<2.8	<2.5
Chloroform	370	49,000	350,000	<2.8	<2.9	<2.8	<2.6	<2.8	<2.5
Chloromethane	NS	NS	NS	<2.8	<2.9	<2.8	<2.6	<2.8	<2.5
cis-1,2-Dichloroethene	250	100,000	500,000	<2.8	<2.9	<2.8	<2.6	<2.8	<2.5
cis-1,3-Dichloropropene	NS	NS	NS	<2.8	<2.9	<2.8	<2.6	<2.8	<2.5
Dibromochloromethane	NS	NS	NS	<2.8	<2.9	<2.8	<2.6	<2.8	<2.5
Dibromomethane	NS	NS	NS	<2.8	<2.9	<2.8	<2.6	<2.8	<2.5
Dichlorodifluoromethane	NS	NS	NS	<2.8	<2.9	<2.8	<2.6	<2.8	<2.5
Ethylbenzene	1,000	41,000	390,000	<2.8	<2.9	<2.8	<2.6	<2.8	<2.5
Methylcyclohexane	NS	NS	NS	<2.8	<2.9	<2.8	<2.6	<2.8	<2.5
Hexachlorobutadine	NS	NS	NS	<2.8	<2.9	<2.8	<2.6	<2.8	<2.5
Isopropylbenzene	NS	NS	NS	<2.8	<2.9	<2.8	<2.6	<2.8	<2.5
Methyl acetate	NS	NS	NS	<2.8	<2.9	<2.8	<2.6	<2.8	<2.5
Methyl tert-butyl ether	930	100,000	500,000	<2.8	<2.9	<2.8	<2.6	<2.8	<2.5
Methylene chloride	50	100,000	500,000	<5.5	<5.9	<5.6	<5.3	<5.6	<5.0
n-Butylbenzene	NS	NS	NS	<2.8	<2.9	<2.8	<2.6	<2.8	<2.5
1,2,3-Trichlorobenzene	NS	NS	NS	<2.8	<2.9	<2.8	<2.6	<2.8	<2.5
n-Propylbenzene	NS	NS	NS	<2.8	<2.9	<2.8	<2.6	<2.8	<2.5
o-Xylene	NS	NS	NS	<2.8	<2.9	<2.8	<2.6	<2.8	<2.5
p- & m- Xylenes	NS	NS	NS	<5.5	<5.9	<5.6	<5.3	<5.6	<5.0
p-Isopropyltoluene	NS	NS	NS	<2.8	<2.9	<2.8	<2.6	<2.8	<2.5
sec-Butylbenzene	NS	NS	NS	<2.8	<2.9	<2.8	<2.6	<2.8	<2.5
Styrene	NS	NS	NS	<2.8	<2.9	<2.8	<2.6	<2.8	<2.5
tert-Butyl alcohol (TBA)	NS	NS	NS	<5.5	<5.9	<5.6	<5.3	<5.6	<5.0
tert-Butylbenzene	NS	NS	NS	<2.8	<2.9	<2.8	<2.6	<2.8	<2.5
Tetrachloroethene	1,300	19,000	150,000	<2.8	<2.9	<2.8	<2.6	<2.8	<2.5
Toluene	700	100,000	500,000	<2.8	<2.9	<2.8	<2.6	<2.8	<2.5
trans-1,2-Dichloroethene	100,000	100,000	500,000	<2.8	<2.9	<2.8	<2.6	<2.8	<2.5
trans-1,3-Dichloropropene	NS	NS	NS	<2.8	<2.9	<2.8	<2.6	<2.8	<2.5
Trichloroethene	470	21,000	200,000	<2.8	<2.9	<2.8	<2.6	<2.8	<2.5
Trichlorofluoromethane	NS	NS	NS	<2.8	<2.9	<2.8	<2.6	<2.8	<2.5
Vinyl chloride	20	900	13,000	<2.8	<2.9	<2.8	<2.6	<2.8	<2.5
Xylenes (Total)	260	100,000	500,000	<8.3	<8.8	<8.3	<7.9	<8.5	<7.5

[1] Unrestricted Use Soil Cleanup Objectives, Table 375-6.8(a), 6 NYCRR 375, NYSDEC 2006
[2] Restricted Residential Soil Cleanup Objectives, Table 375-6.8(b), 6 NYCRR 375, NYSDEC 2006
[3] Commercial Soil Cleanup Objectives, Table 375-6.8(b), 6 NYCRR 375, NYSDEC 2006
Bolded values signify detection above method detection limit
Highlighted values signify exceedance of Commercial Soil Cleanup Values
NS = No Standard

Table 2

Semi Volatile Organic Compounds in Soil (ug/kg-dry)
EPA Method 8270
36-33 31st Street
Long Island City, NY 11106

ACT Project No.: 8459-LINY

Sample ID				SB-1 (0-2')	SB-1 (4-6')	SB-2 (0-2')	SB-2 (4-6')	SB-3 (0-2')	SB-3 (4-6')
Sample Date	UUSCO [1]	RRSCO [2]	CSCO [3]	11/9/15	11/9/15	11/9/15	11/9/15	11/9/15	11/9/15
1,1'-Biphenyl	NS	NS	NS	<72.3	<71.9	<73.5	<78.9	<73.8	<65.0
1,2,4,5-Tetrachlorobenzene	NS	NS	NS	<144	<143	<147	<157	<147	<130
1,2,4-Trichlorobenzene	NS	NS	NS	<72.3	<71.9	<73.5	<78.9	<73.8	<65.0
1,2-Dichlorobenzene	100,000	100,000	500,000	<72.3	<71.9	<73.5	<78.9	<73.8	<65.0
1,2-Diphenylhydrazine (as Azobenzene)	NS	NS	NS	<72.3	<71.9	<73.5	<78.9	<73.8	<65.0
1,3-Dichlorobenzene	17,000	49,000	280,000	<72.3	<71.9	<73.5	<78.9	<73.8	<65.0
1,4-Dichlorobenzene	980	13,000	130,000	<72.3	<71.9	<73.5	<78.9	<73.8	<65.0
2,3,4,6-Tetrachlorophenol	NS	NS	NS	<144	<143	<147	<157	<147	<130
2,4,5-Trichlorophenol	NS	NS	NS	<72.3	<71.9	<73.5	<78.9	<73.8	<65.0
2,4,6-Trichlorophenol	NS	NS	NS	<72.3	<71.9	<73.5	<78.9	<73.8	<65.0
2,4-Dichlorophenol	NS	NS	NS	<72.3	<71.9	<73.5	<78.9	<73.8	<65.0
2,4-Dimethylphenol	NS	NS	NS	<72.3	<71.9	<73.5	<78.9	<73.8	<65.0
2,4-Dinitrophenol	NS	NS	NS	<144	<143	<147	<157	<147	<130
2,4-Dinitrotoluene	NS	NS	NS	<72.3	<71.9	<73.5	<78.9	<73.8	<65.0
2,6-Dinitrotoluene	NS	NS	NS	<72.3	<71.9	<73.5	<78.9	<73.8	<65.0
2-Chloronaphthalene	NS	NS	NS	<72.3	<71.9	<73.5	<78.9	<73.8	<65.0
2-Chlorophenol	NS	NS	NS	<72.3	<71.9	<73.5	<78.9	<73.8	<65.0
2-Methylnaphthalene	NS	NS	NS	<72.3	<71.9	<73.5	<78.9	<73.8	<65.0
2-Methylphenol	330	100,000	500,000	<72.3	<71.9	<73.5	<78.9	<73.8	<65.0
2-Nitroaniline	NS	NS	NS	<144	<143	<147	<157	<147	<130
2-Nitrophenol	NS	NS	NS	<72.3	<71.9	<73.5	<78.9	<73.8	<65.0
3- & 4-Methylphenols	NS	NS	NS	<72.3	<71.9	<73.5	<78.9	<73.8	<65.0
3,3'-Dichlorobenzidine	NS	NS	NS	<72.3	<71.9	<73.5	<78.9	<73.8	<65.0
3-Nitroaniline	NS	NS	NS	<144	<143	<147	<157	<147	<130
4,6-Dinitro-2-methylphenol	NS	NS	NS	<144	<143	<147	<157	<147	<130
4-Bromophenyl phenyl ether	NS	NS	NS	<72.3	<71.9	<73.5	<78.9	<73.8	<65.0
4-Chloro-3-methylphenol	NS	NS	NS	<72.3	<71.9	<73.5	<78.9	<73.8	<65.0
4-Chloroaniline	NS	NS	NS	<72.3	<71.9	<73.5	<78.9	<73.8	<65.0
4-Chlorophenyl phenyl ether	NS	NS	NS	<72.3	<71.9	<73.5	<78.9	<73.8	<65.0
4-Nitroaniline	NS	NS	NS	<144	<143	<147	<157	<147	<130
4-Nitrophenol	NS	NS	NS	<144	<143	<147	<157	<147	<130
Acenaphthene	20,000	100,000	500,000	<72.3	<71.9	<73.5	<78.9	<73.8	<65.0
Acenaphthylene	100,000	100,000	500,000	<72.3	<71.9	<73.5	<78.9	<73.8	<65.0
Acetophenone	NS	NS	NS	<72.3	<71.9	<73.5	<78.9	<73.8	<65.0
Aniline	48,000	10,000	500,000	<289	<287	<294	<315	<295	<260
Anthracene	100,000	100,000	500,000	<72.3	<71.9	<73.5	<78.9	**160**	<65.0
Atrazine	NS	NS	NS	<72.3	<71.9	<73.5	<78.9	<73.8	<65.0
Benzaldehyde	NS	NS	NS	<72.3	<71.9	<73.5	<78.9	<73.8	<65.0
Benzidine	NS	NS	NS	<289	<287	<294	<315	<295	<260
Benzo(a)anthracene	1,000	1,000	5,600	<72.3	<71.9	**187**	<78.9	**469**	<65.0
Benzo(a)pyrene	1,000	1,000	1,000	<72.3	<71.9	**179**	<78.9	**381**	<65.0
Benzo(b)fluoranthene	1,000	1,000	5,600	<72.3	<71.9	**123**	<78.9	**212**	<65.0
Benzo(g,h,i)perylene	100,000	100,000	500,000	<72.3	<71.9	**92.7**	<78.9	**161**	<65.0
Benzo(k)fluoranthene	NS	NS	NS	<72.3	<71.9	**136**	<78.9	**354**	<65.0
Benzoic acid	800	3,900	56,000	<72.3	<71.9	<73.5	<78.9	<73.8	<65.0
Benzyl alcohol	NS	NS	NS	<72.3	<71.9	<73.5	<78.9	<73.8	<65.0
Benzyl butyl phthalate	NS	NS	NS	<72.3	<71.9	<73.5	<78.9	<73.8	<65.0
Bis(2-chloroethoxy)methane	NS	NS	NS	<72.3	<71.9	<73.5	<78.9	<73.8	<65.0
Bis(2-chloroethyl)ether	NS	NS	NS	<72.3	<71.9	<73.5	<78.9	<73.8	<65.0
Bis(2-chloroisopropyl)ether	NS	NS	NS	<72.3	<71.9	<73.5	<78.9	<73.8	<65.0
Bis(2-ethylhexyl)phthalate	NS	NS	NS	<72.3	<71.9	<73.5	<157	<73.8	<65.0
Caprolactam	NS	NS	NS	<144	<143	<147	<78.9	<147	<130
Carbazole	NS	NS	NS	<72.3	<71.9	<73.5	<78.9	**112**	<65.0
Chrysene	1,000	3,900	56,000	<72.3	<71.9	**225**	<78.9	**493**	<65.0
Dibenzo(a,h)anthracene	330	330	560	<72.3	<71.9	<73.5	<78.9	<73.8	<65.0
Dibenzofuran	NS	NS	NS	<72.3	<71.9	<73.5	<78.9	<73.8	<65.0
Diethyl phthalate	NS	NS	NS	<72.3	<71.9	<73.5	<78.9	<73.8	<65.0
Dimethyl phthalate	NS	NS	NS	<72.3	<71.9	<73.5	<78.9	<73.8	<65.0
Di-n-butyl phthalate	NS	NS	NS	<72.3	<71.9	<73.5	<78.9	<73.8	<65.0
Di-n-octyl phthalate	NS	NS	NS	<72.3	<71.9	<73.5	<78.9	<73.8	<65.0
Fluoranthene	100,000	100,000	500,000	<72.3	<71.9	**347**	<78.9	**1,060**	<65.0
Fluorene	30,000	100,000	500,000	**120**	<71.9	<73.5	<78.9	<73.8	<65.0
Hexachlorobenzene	33	12	60	<72.3	<71.9	<73.5	<78.9	<73.8	<65.0
Hexachlorobutadiene	NS	NS	NS	<72.3	<71.9	<73.5	<78.9	<73.8	<65.0
Hexachlorocyclopentadiene	NS	NS	NS	<72.3	<71.9	<73.5	<78.9	<73.8	<65.0
Hexachloroethane	NS	NS	NS	<72.3	<71.9	<73.5	<78.9	<73.8	<65.0
Indeno(1,2,3-cd)pyrene	500	500	5,600	<72.3	<71.9	**95.0**	<78.9	**116**	<65.0
Isophorone	NS	NS	NS	<72.3	<71.9	<73.5	<78.9	<73.8	<65.0
Naphthalene	12,000	100,000	500,000	<72.3	<71.9	<73.5	<78.9	<73.8	<65.0
Nitrobenzene	NS	NS	NS	<72.3	<71.9	<73.5	<78.9	<73.8	<65.0
N-Nitrosodiumethylamine	NS	NS	NS	<72.3	<71.9	<73.5	<78.9	<73.8	<65.0
N-nitroso-di-n-propylamine	NS	NS	NS	<72.3	<71.9	<73.5	<78.9	<73.8	<65.0
N-Nitrosodiphenylamine	NS	NS	NS	<72.3	<71.9	<73.5	<78.9	<73.8	<65.0
Pentachlorophenol	800	6,700	6,700	<72.3	<71.9	<73.5	<78.9	<73.8	<65.0
Phenanthrene	100,000	100,000	500,000	<72.3	<71.9	**242**	<78.9	**931**	<65.0
Phenol	330	100,000	500,000	<72.3	<71.9	<73.5	<78.9	<73.8	<65.0
Pyrene	100,000	100,000	500,000	<72.3	<71.9	**382**	<78.9	**1,160**	<65.0

[1] Unrestricted Use Soil Cleanup Objectives, Table 375-6.8(a), 6 NYCRR 375, NYSDEC 2006
[2] Restricted Residential Soil Cleanup Objectives, Table 375-6.8(b), 6 NYCRR 375, NYSDEC 2006
[3] Commercial Soil Cleanup Objectives, Table 375-6.8(b), 6 NYCRR 375, NYSDEC 2006

Bolded values signify detection above method detection limit
Highlighted values signify exceedance of Commercial Soil Cleanup Values
NS = No Standard

Table 2 Continued

Semi Volatile Organic Compounds in Soil (ug/kg-dry)
EPA Method 8270
36-33 31st Street
Long Island City, NY 11106

ACT Project No.: 8459-LINY

Sample ID Sample Date	UUSCO [1]	RRSCO [2]	CSCO [3]	SB-4 (0-2') 11/9/15	SB-4 (4-6') 11/9/15	SB-5 (0-2') 11/10/15	SB-5 (4-6') 11/10/15	SB-6 (0-2') 11/10/15	SB-6 (4-6') 11/10/15
1,1'-Biphenyl	NS	NS	NS	<75.3	<73.9	<70.5	<64.8	<66.8	<65.1
1,2,4,5-Tetrachlorobenzene	NS	NS	NS	<150	<148	<141	<129	<133	<130
1,2,4-Trichlorobenzene	NS	NS	NS	<75.3	<73.9	<70.5	<64.8	<66.8	<65.1
1,2-Dichlorobenzene	100,000	100,000	500,000	<75.3	<73.9	<70.5	<64.8	<66.8	<65.1
1,2-Diphenylhydrazine (as Azobenzene)	NS	NS	NS	<75.3	<73.9	<70.5	<64.8	<66.8	<65.1
1,3-Dichlorobenzene	17,000	49,000	280,000	<75.3	<73.9	<70.5	<64.8	<66.8	<65.1
1,4-Dichlorobenzene	980	13,000	130,000	<75.3	<73.9	<70.5	<64.8	<66.8	<65.1
2,3,4,6-Tetrachlorophenol	NS	NS	NS	<150	<148	<141	<129	<133	<130
2,4,5-Trichlorophenol	NS	NS	NS	<75.3	<73.9	<70.5	<64.8	<66.8	<65.1
2,4,6-Trichlorophenol	NS	NS	NS	<75.3	<73.9	<70.5	<64.8	<66.8	<65.1
2,4-Dichlorophenol	NS	NS	NS	<75.3	<73.9	<70.5	<64.8	<66.8	<65.1
2,4-Dimethylphenol	NS	NS	NS	<75.3	<73.9	<70.5	<64.8	<66.8	<65.1
2,4-Dinitrophenol	NS	NS	NS	<150	<148	<141	<129	<133	<130
2,4-Dinitrotoluene	NS	NS	NS	<75.3	<73.9	<70.5	<64.8	<66.8	<65.1
2,6-Dinitrotoluene	NS	NS	NS	<75.3	<73.9	<70.5	<64.8	<66.8	<65.1
2-Chloronaphthalene	NS	NS	NS	<75.3	<73.9	<70.5	<64.8	<66.8	<65.1
2-Chlorophenol	NS	NS	NS	<75.3	<73.9	<70.5	<64.8	<66.8	<65.1
2-Methylnaphthalene	NS	NS	NS	<75.3	<73.9	<70.5	<64.8	<66.8	<65.1
2-Methylphenol	330	100,000	500,000	<75.3	<73.9	<70.5	<64.8	<66.8	<65.1
2-Nitroaniline	NS	NS	NS	<150	<148	<141	<129	<133	<130
2-Nitrophenol	NS	NS	NS	<75.3	<73.9	<70.5	<64.8	<66.8	<65.1
3- & 4-Methylphenols	NS	NS	NS	<75.3	<73.9	<70.5	<64.8	<66.8	<65.1
3,3'-Dichlorobenzidine	NS	NS	NS	<75.3	<73.9	<70.5	<64.8	<66.8	<65.1
3-Nitroaniline	NS	NS	NS	<150	<148	<141	<129	<133	<130
4,6-Dinitro-2-methylphenol	NS	NS	NS	<150	<148	<141	<129	<133	<130
4-Bromophenyl phenyl ether	NS	NS	NS	<75.3	<73.9	<70.5	<64.8	<66.8	<65.1
4-Chloro-3-methylphenol	NS	NS	NS	<75.3	<73.9	<70.5	<64.8	<66.8	<65.1
4-Chloroaniline	NS	NS	NS	<75.3	<73.9	<70.5	<64.8	<66.8	<65.1
4-Chlorophenyl phenyl ether	NS	NS	NS	<75.3	<73.9	<70.5	<64.8	<66.8	<65.1
4-Nitroaniline	NS	NS	NS	<150	<148	<141	<129	<133	<130
4-Nitrophenol	NS	NS	NS	<150	<148	<141	<129	<133	<130
Acenaphthene	20,000	100,000	500,000	<75.3	<73.9	<70.5	<64.8	<66.8	<65.1
Acenaphthylene	100,000	100,000	500,000	<75.3	<73.9	<70.5	<64.8	<66.8	<65.1
Acetophenone	NS	NS	NS	<75.3	<73.9	<70.5	<64.8	<66.8	<65.1
Aniline	48,000	10,000	500,000	<301	<295	<282	<259	<267	<260
Anthracene	100,000	100,000	500,000	<75.3	<73.9	<70.5	<64.8	<66.8	<65.1
Atrazine	NS	NS	NS	<75.3	<73.9	<70.5	<64.8	<66.8	<65.1
Benzaldehyde	NS	NS	NS	<75.3	<73.9	<70.5	<64.8	<66.8	<65.1
Benzidine	NS	NS	NS	<301	<295	<282	<259	<267	<260
Benzo(a)anthracene	1,000	1,000	5,600	<75.3	<73.9	<70.5	<64.8	**124**	<65.1
Benzo(a)pyrene	1,000	1,000	1,000	<75.3	<73.9	<70.5	<64.8	**102**	<65.1
Benzo(b)fluoranthene	1,000	1,000	5,600	<75.3	<73.9	<70.5	<64.8	<66.8	<65.1
Benzo(g,h,i)perylene	100,000	100,000	500,000	<75.3	<73.9	<70.5	<64.8	<66.8	<65.1
Benzo(k)fluoranthene	NS	NS	NS	<75.3	<73.9	<70.5	<64.8	**91.7**	<65.1
Benzoic acid	800	3,900	56,000	<75.3	<73.9	<70.5	<64.8	<66.8	<65.1
Benzyl alcohol	NS	NS	NS	<75.3	<73.9	<70.5	<64.8	<66.8	<65.1
Benzyl butyl phthalate	NS	NS	NS	<75.3	<73.9	<70.5	<64.8	<66.8	<65.1
Bis(2-chloroethoxy)methane	NS	NS	NS	<75.3	<73.9	<70.5	<64.8	<66.8	<65.1
Bis(2-chloroethyl)ether	NS	NS	NS	<75.3	<73.9	<70.5	<64.8	<66.8	<65.1
Bis(2-chloroisopropyl)ether	NS	NS	NS	<75.3	<73.9	<70.5	<64.8	<66.8	<65.1
Bis(2-ethylhexyl)phthalate	NS	NS	NS	<75.3	<73.9	<70.5	<64.8	<66.8	**73.7**
Caprolactam	NS	NS	NS	<150	<148	<141	<129	<133	<130
Carbazole	NS	NS	NS	<75.3	<73.9	<70.5	<64.8	<66.8	<65.1
Chrysene	1,000	3,900	56,000	<75.3	<73.9	<70.5	<64.8	**122**	<65.1
Dibenzo(a,h)anthracene	330	330	560	<75.3	<73.9	<70.5	<64.8	<66.8	<65.1
Dibenzofuran	NS	NS	NS	<75.3	<73.9	<70.5	<64.8	<66.8	<65.1
Diethyl phthalate	NS	NS	NS	<75.3	<73.9	<70.5	<64.8	<66.8	<65.1
Dimethyl phthalate	NS	NS	NS	<75.3	<73.9	<70.5	<64.8	<66.8	<65.1
Di-n-butyl phthalate	NS	NS	NS	<75.3	<73.9	<70.5	<64.8	<66.8	<65.1
Di-n-octyl phthalate	NS	NS	NS	<75.3	<73.9	<70.5	<64.8	<66.8	<65.1
Fluoranthene	100,000	100,000	500,000	<75.3	<73.9	<70.5	<64.8	**295**	<65.1
Fluorene	30,000	100,000	500,000	<75.3	<73.9	<70.5	<64.8	<66.8	<65.1
Hexachlorobenzene	33	12	60	<75.3	<73.9	<70.5	<64.8	<66.8	<65.1
Hexachlorobutadiene	NS	NS	NS	<75.3	<73.9	<70.5	<64.8	<66.8	<65.1
Hexachlorocyclopentadiene	NS	NS	NS	<75.3	<73.9	<70.5	<64.8	<66.8	<65.1
Hexachloroethane	NS	NS	NS	<75.3	<73.9	<70.5	<64.8	<66.8	<65.1
Indeno(1,2,3-cd)pyrene	500	500	5,600	<75.3	<73.9	<70.5	<64.8	**95.9**	<65.1
Isophorone	NS	NS	NS	<75.3	<73.9	<70.5	<64.8	<66.8	<65.1
Naphthalene	12,000	100,000	500,000	<75.3	<73.9	<70.5	<64.8	<66.8	<65.1
Nitrobenzene	NS	NS	NS	<75.3	<73.9	<70.5	<64.8	<66.8	<65.1
N-Nitrosodiumethylamine	NS	NS	NS	<75.3	<73.9	<70.5	<64.8	<66.8	<65.1
N-nitroso-di-n-propylamine	NS	NS	NS	<75.3	<73.9	**633**	<64.8	<66.8	<65.1
N-Nitrosodiphenylamine	NS	NS	NS	<75.3	<73.9	<70.5	<64.8	<66.8	<65.1
Pentachlorophenol	800	6,700	6,700	<75.3	<73.9	<70.5	<64.8	<66.8	<65.1
Phenanthrene	100,000	100,000	500,000	<75.3	<73.9	<70.5	<64.8	**278**	<65.1
Phenol	330	100,000	500,000	<75.3	<73.9	<70.5	<64.8	<66.8	<65.1
Pyrene	100,000	100,000	500,000	<75.3	<73.9	<70.5	<64.8	**242**	<65.1

[1] Unrestricted Use Soil Cleanup Objectives, Table 375-6.8(a), 6 NYCRR 375, NYSDEC 2006
[2] Restricted Residential Soil Cleanup Objectives, Table 375-6.8(b), 6 NYCRR 375, NYSDEC 2006
[3] Commercial Soil Cleanup Objectives, Table 375-6.8(b), 6 NYCRR 375, NYSDEC 2006

Bolded values signify detection above method detection limit
Highlighted values signify exceedance of Commercial Soil Cleanup Values
NS = No Standard

Table 3

PCBs and Pesticides in Soil (ug/kg-dry)
EPA Method 8081/8082
36-33 31st Street
Long Island City, NY 11106

ACT Project No.: 8459-LINY

Sample ID Sample Date	UUSCO [1]	RRSCO [2]	CSCO [3]	SB-1 (0-2') 11/9/15	SB-1 (4-6') 11/9/15	SB-2 (0-2') 11/9/15	SB-2 (4-6') 11/9/15	SB-3 (0-2') 11/9/15	SB-3 (4-6') 11/9/15
Aldrin	5	19	680	<1.90	<1.89	<1.94	<2.08	<1.94	<1.71
alpha-BHC	20	97	3,400	<1.90	<1.89	<1.94	<2.08	<1.94	<1.71
beta-BHC	36	72	3,000	<1.90	<1.89	<1.94	<2.08	<1.94	<1.71
delta-BHC	40	100,000	500,000	<1.90	<1.89	<1.94	<2.08	<1.94	<1.71
gamma-BHC	100	280	9,200	<1.90	<1.89	<1.94	<2.08	<1.94	<1.71
gamma-Chlordane	NS	NS	NS	<1.90	<1.89	<1.94	<2.08	<1.94	<1.71
alpha-Chlordane	NS	NS	NS	<1.90	<1.89	<1.94	<2.08	<1.94	<1.71
Chlordane, total	NS	NS	NS	<76.1	<75.7	<77.4	<83.0	<77.6	<68,4
4,4´-DDD	3.3	2,600	92,000	<1.90	<1.89	<1.94	<2.08	<1.94	<1.71
4,4´-DDE	3.3	1,800	62,000	<1.90	<1.89	<1.94	<2.08	<1.94	<1.71
4,4´-DDT	3.3	1,700	47,000	<1.90	<1.89	<1.94	<2.08	<1.94	<1.71
Dieldrin	5	39	1,400	<1.90	<1.89	<1.94	<2.08	<1.94	<1.71
Endosulfan I	2,400	4,800	200,000	<1.90	<1.89	<1.94	<2.08	<1.94	<1.71
Endosulfan II	2,400	4,800	200,000	<1.90	<1.89	<1.94	<2.08	<1.94	<1.71
Endosulfan sulfate	2,400	4,800	200,000	<1.90	<1.89	<1.94	<2.08	<1.94	<1.71
Endrin	14	2,200	89,000	<1.90	<1.89	<1.94	<2.08	<1.94	<1.71
Endrin aldehyde	NS	NS	NS	<1.90	<1.89	<1.94	<2.08	<1.94	<1.71
Endrin ketone	NS	NS	NS	<1.90	<1.89	<1.94	<2.08	<1.94	<1.71
Heptachlor	42	420	15,000	<1.90	<1.89	<1.94	<2.08	<1.94	<1.71
Heptachlor epoxide	NS	NS	NS	<1.90	<1.89	<1.94	<2.08	<1.94	<1.71
Methoxychlor	NS	NS	NS	<1.90	<1.89	<1.94	<2.08	<1.94	<1.71
Toxaphene	NS	NS	NS	<190	<189	<194	<208	<194	<171
Aroclor 1016	100	1,000	1,000	<0.0192	<0.0191	<0.0195	<0.0210	<0.0196	<0.0173
Aroclor 1221	100	1,000	1,000	<0.0192	<0.0191	<0.0195	<0.0210	<0.0196	<0.0173
Aroclor 1232	100	1,000	1,000	<0.0192	<0.0191	<0.0195	<0.0210	<0.0196	<0.0173
Aroclor 1242	100	1,000	1,000	<0.0192	<0.0191	<0.0195	<0.0210	<0.0196	<0.0173
Aroclor 1248	100	1,000	1,000	<0.0192	<0.0191	<0.0195	<0.0210	<0.0196	<0.0173
Aroclor 1254	100	1,000	1,000	<0.0192	<0.0191	<0.0195	<0.0210	<0.0196	<0.0173
Aroclor 1260	100	1,000	1,000	<0.0192	<0.0191	<0.0195	<0.0210	<0.0196	<0.0173

[1] Unrestricted Use Soil Cleanup Objectives, Table 375-6.8(a), 6 NYCRR 375, NYSDEC 2006
[2] Restricted Residential Soil Cleanup Objectives, Table 375-6.8(b), 6 NYCRR 375, NYSDEC 2006
[3] Commercial Soil Cleanup Objectives, Table 375-6.8(b), 6 NYCRR 375, NYSDEC 2006
Bolded values signify detection above method detection limit
Highlighted values signify exceedance of regulatory standard
NS = No Standard

Table 3 Continued

PCBs and Pesticides in Soil (ug/kg-dry)
EPA Method 8081/8082
36-33 31st Street
Long Island City, NY 11106

ACT Project No.: 8459-LINY

Sample ID Sample Date	UUSCO [1]	RRSCO [2]	CSCO [3]	SB-4 (0-2') 11/9/15	SB-4 (4-6') 11/9/15	SB-5 (0-2') 11/10/15	SB-5 (4-6') 11/10/15	SB-6 (0-2') 11/10/15	SB-6 (4-6') 11/10/15
Aldrin	5	19	680	<1.98	<1.95	<1.86	<1.70	<1.76	<1.71
alpha-BHC	20	97	3,400	<1.98	<1.95	<1.86	<1.70	<1.76	<1.71
beta-BHC	36	72	3,000	<1.98	<1.95	<1.86	<1.70	<1.76	<1.71
delta-BHC	40	100,000	500,000	<1.98	<1.95	<1.86	<1.70	<1.76	<1.71
gamma-BHC	100	280	9,200	<1.98	<1.95	<1.86	<1.70	<1.76	<1.71
gamma-Chlordane	NS	NS	NS	<1.98	<1.95	<1.86	<1.70	<1.76	<1.71
alpha-Chlordane	NS	NS	NS	<1.98	<1.95	<1.86	<1.70	<1.76	<1.71
Chlordane, total	NS	NS	NS	<79.2	<77.8	<74.2	<68.2	<70.4	<68.5
4,4´-DDD	3.3	2,600	92,000	<1.98	<1.95	<1.86	<1.70	<1.76	<1.71
4,4´-DDE	3.3	1,800	62,000	<1.98	<1.95	<1.86	<1.70	<1.76	<1.71
4,4´-DDT	3.3	1,700	47,000	<1.98	<1.95	<1.86	<1.70	<1.76	<1.71
Dieldrin	5	39	1,400	<1.98	<1.95	<1.86	<1.70	<1.76	<1.71
Endosulfan I	2,400	4,800	200,000	<1.98	<1.95	<1.86	<1.70	<1.76	<1.71
Endosulfan II	2,400	4,800	200,000	<1.98	<1.95	<1.86	<1.70	<1.76	<1.71
Endosulfan sulfate	2,400	4,800	200,000	<1.98	<1.95	<1.86	<1.70	<1.76	<1.71
Endrin	14	2,200	89,000	<1.98	<1.95	<1.86	<1.70	<1.76	<1.71
Endrin aldehyde	NS	NS	NS	<1.98	<1.95	<1.86	<1.70	<1.76	<1.71
Endrin ketone	NS	NS	NS	<1.98	<1.95	<1.86	<1.70	<1.76	<1.71
Heptachlor	42	420	15,000	<1.98	<1.95	<1.86	<1.70	<1.76	<1.71
Heptachlor epoxide	NS	NS	NS	<1.98	<1.95	<1.86	<1.70	<1.76	<1.71
Methoxychlor	NS	NS	NS	<198	<195	<186	<170	<176	<171
Toxaphene	NS	NS	NS	<0.0200	<0.0196	<0.0187	<0.0172	<0.0178	<0.0173
Aroclor 1016	100	1,000	1,000	<0.0200	<0.0196	<0.0187	<0.0172	<0.0178	<0.0173
Aroclor 1221	100	1,000	1,000	<0.0200	<0.0196	<0.0187	<0.0172	<0.0178	<0.0173
Aroclor 1232	100	1,000	1,000	<0.0200	<0.0196	<0.0187	<0.0172	<0.0178	<0.0173
Aroclor 1242	100	1,000	1,000	<0.0200	<0.0196	<0.0187	<0.0172	<0.0178	<0.0173
Aroclor 1248	100	1,000	1,000	<0.0200	<0.0196	<0.0187	<0.0172	<0.0178	<0.0173
Aroclor 1254	100	1,000	1,000	<0.0200	<0.0196	<0.0187	<0.0172	<0.0178	<0.0173
Aroclor 1260	100	1,000	1,000	<0.0200	<0.0196	<0.0187	<0.0172	<0.0178	<0.0173

[1] Unrestricted Use Soil Cleanup Objectives, Table 375-6.8(a), 6 NYCRR 375, NYSDEC 2006
[2] Restricted Residential Soil Cleanup Objectives, Table 375-6.8(b), 6 NYCRR 375, NYSDEC 2006
[3] Commercial Soil Cleanup Objectives, Table 375-6.8(b), 6 NYCRR 375, NYSDEC 2006
Bolded values signify detection above method detection limit
Highlighted values signify exceedance of regulatory standard
NS = No Standard

Table 4

Metals in Soil (mg/kg-dry)
EPA Method 6010
36-33 31st Street
Long Island City, NY 11106

ACT Project No.: 8459-LINY

Sample ID / Sample Date	UUSCO [1]	RRSCO [2]	CSCO [3]	SB-1 (0-2') 11/9/15	SB-1 (4-6') 11/9/15	SB-2 (0-2') 11/9/15	SB-2 (4-6') 11/9/15	SB-3 (0-2') 11/9/15	SB-3 (4-6') 11/9/15
Aluminum	NS	NS	NS	**13,000**	**11,600**	**13,600**	**17,000**	**13,300**	**5,900**
Antimony	NS	NS	NS	<0.576	<0.573	<0.586	<0.629	<0.588	<0.518
Arsenic	13	16	16	**2.67**	**1.91**	**5.26**	**3.64**	**4.63**	<1.04
Barium	350	400	400	**67.8**	**81.4**	**108.0**	**130**	**76.3**	**23.4**
Beryllium	7.2	72	590	**0.425**	**0.303**	**0.487**	**1.01**	**0.459**	**0.133**
Cadmium	2.5	4.3	9.3	<0.346	<0.344	<0.352	**1.71**	0.353	0.311
Calcium	NS	NS	NS	**1,260**	**592**	**1,710**	**486**	**1,360**	**415**
Chromium	30	180	1,500	**16.9**	**17.2**	**18.1**	**17.6**	**20**	**9.74**
Cobalt	NS	NS	NS	**8.00**	**6.78**	**7.69**	**7.27**	**7.85**	**4.64**
Copper	50	270	270	**24.4**	**19.10**	**63.1**	**13.8**	**22.8**	**14.9**
Iron	NS	NS	NS	**16,900**	**15,000**	**16,200**	**16,600**	**18,100**	**7,620**
Lead	63	400	1,000	**38.7**	**12.0**	**183**	**27.4**	**85.1**	**3.57**
Magnesium	NS	NS	NS	**2,830**	**2,910**	**2,310**	**2,150**	**2,270**	**2,580**
Manganese	1,600	2,000	10,000	**451**	**305**	**517.0**	**1010**	**448**	**184**
Mercury	0.18	0.81	2.8	**0.122**	<0.0344	**1.70**	**0.0445**	**0.66**	<0.0311
Nickel	30	310	310	**17.0**	**16.5**	**13.5**	**16.8**	**14.3**	**12.2**
Potassium	NS	NS	NS	**619**	**678**	**667**	**511**	**686**	**803**
Selenium	3.9	180	1,500	<1.15	<1.15	**1.28**	<1.26	<1.18	<1.04
Silver	2	180	1,500	<0.576	<0.573	<0.586	<0.629	<0.588	<0.518
Sodium	NS	NS	NS	**94.9**	**239**	**128**	**79.5**	**106**	**67.3**
Thallium	NS	NS	NS	<1.15	<1.15	<1.17	<1.26	<1.18	<1.04
Vanadium	NS	NS	NS	**23.3**	**27.7**	**23.8**	**22.9**	**26.4**	**16**
Zinc	109	10,000	10,000	**59.6**	**36.4**	**43.3**	**80.0**	**54.9**	**32.9**

[1] Unrestricted Use Soil Cleanup Objectives, Table 375-6.8(a), 6 NYCRR 375, NYSDEC 2006
[2] Restricted Residential Soil Cleanup Objectives, Table 375-6.8(b), 6 NYCRR 375, NYSDEC 2006
[3] Commercial Soil Cleanup Objectives, Table 375-6.8(b), 6 NYCRR 375, NYSDEC 2006
Bolded values signify detection above method detection limit
Highlighted values signify exceedance of regulatory standard
NS = No Standard

Table 4 Continued

Metals in Soil (mg/kg-dry)
EPA Method 6010
36-33 31st Street
Long Island City, NY 11106

ACT Project No.: 8459-LINY

Sample ID / Sample Date	UUSCO [1]	RRSCO [2]	CSCO [3]	SB-4 (0-2') 11/9/15	SB-4 (4-6') 11/9/15	SB-5 (0-2') 11/10/15	SB-5 (4-6') 11/10/15	SB-6 (0-2') 11/10/15	SB-6 (4-6') 11/10/15
Aluminum	NS	NS	NS	**14,200**	**14,300**	**15,400**	**4,040**	**7,900**	**4,450**
Antimony	NS	NS	NS	<0.600	<0.590	<0.562	<0.516	<0.533	<0.519
Arsenic	13	16	16	**3.72**	**2.91**	**3.43**	<1.03	**1.89**	<1.04
Barium	350	400	400	**77.8**	**35.0**	**46.5**	**12.4**	**24.1**	**18.4**
Beryllium	7.2	72	590	**0.492**	**0.368**	**0.371**	<0.103	**0.138**	**0.105**
Cadmium	2.5	4.3	9.3	<0.360	<0.354	<0.337	<0.310	<0.320	<0.311
Calcium	NS	NS	NS	**1,480**	**848**	**2,770**	632	**648**	**549**
Chromium	30	180	1,500	**17.9**	**18.4**	**22.6**	**7.68**	**11.4**	**9.45**
Cobalt	NS	NS	NS	**9.84**	**8.58**	**9.05**	**4.26**	**5.34**	**4.73**
Copper	50	270	270	**23.6**	**20.10**	**21.4**	**13.7**	**16.9**	**30.2**
Iron	NS	NS	NS	**18,500**	**21,300**	**20,800**	**6,710**	**11,600**	**9,370**
Lead	63	400	1,000	**42.0**	**9.58**	**9.88**	**2.63**	**4.93**	**2.98**
Magnesium	NS	NS	NS	**2,380**	**2,600**	**3,270**	**2,060**	**2,290**	**2,620**
Manganese	1,600	2,000	10,000	**457**	**484**	**440.0**	**206**	**296**	**236**
Mercury	0.18	0.81	2.8	**0.497**	**0.0460**	**0.0409**	<0.0310	<0.0320	<0.0311
Nickel	30	310	310	**14.8**	**20.9**	**22.8**	**9.95**	**15.7**	**14.1**
Potassium	NS	NS	NS	**672**	**813**	**1,050**	**439**	**791**	**422**
Selenium	3.9	180	1,500	<1.20	<1.18	<1.12	<1.03	<1.07	<1.04
Silver	2	180	1,500	<0.600	<0.590	<0.562	<0.516	<0.533	<0.519
Sodium	NS	NS	NS	**183.0**	**87.3**	**147**	**54.4**	**75.8**	**91.8**
Thallium	NS	NS	NS	<1.20	<1.18	<1.12	<1.03	<1.07	<1.04
Vanadium	NS	NS	NS	**24.9**	**28.1**	**30.3**	**11.3**	**18.3**	**17.1**
Zinc	109	10,000	10,000	**62.2**	**73.7**	**45.0**	**19.4**	**25.7**	**20.8**

[1] Unrestricted Use Soil Cleanup Objectives, Table 375-6.8(a), 6 NYCRR 375, NYSDEC 2006
[2] Restricted Residential Soil Cleanup Objectives, Table 375-6.8(b), 6 NYCRR 375, NYSDEC 2006
[3] Commercial Soil Cleanup Objectives, Table 375-6.8(b), 6 NYCRR 375, NYSDEC 2006
Bolded values signify detection above method detection limit
Highlighted values signify exceedance of regulatory standard
NS = No Standard

Table 5

Volatile Organic Compounds in Soil Vapor (ug/m3)
EPA Method TO-15
36-33 31st Street
Long Island City, NY 11106

ACT Project No.: 8459-LINY

Sample ID Sample Date	NYSDOH Soil Vapor Guideline[1]	SV-1 11/10/15	SV-2 11/10/15	SV-3 11/10/15	SV-4 11/10/15
1,1,1,2-Tetrachloroethane	NA	<1.5	<6.9	<1.4	<1.2
1,1,1-Trichloroethane	NA	<1.2	<5.5	<1.1	<0.93
1,1,2,2-Tetrachloroethane	NA	<1.5	<6.9	<1.4	<1.2
1,1,2-Trichloro-1,2,2-trifluoroethane	NA	<1.6	<7.7	<1.5	<1.3
1,1,2-Trichloroethane	NA	<1.2	<5.5	<1.1	<0.93
1,1-Dichloroethane	NA	<0.87	<4.1	<0.82	<0.69
1,1-Dichloroethylene	NA	<0.85	<4.0	<0.80	<0.68
1,2,4-Trichlorobenzene	NA	<1.6	<7.5	<1.5	<1.3
1,2,4-Trimethylbenzene	NA	**25**	**13**	**13**	**25**
1,2-Dibromoethane	NA	<1.6	<7.7	<1.5	<1.3
1,2-Dichlorobenzene	NA	<1.3	<6.1	<1.2	<1.0
1,2-Dichloroethane	NA	<0.87	<4.1	<0.82	<0.69
1,2-Dichloropropane	NA	<0.99	<4.7	<0.93	<0.79
1,2-Dichlorotetrafluoroethane	NA	<1.5	<7.0	<1.4	<1.2
1,3,5-Trimethylbenzene	NA	**7.3**	<5.0	**3.3**	**8.1**
1,3-Butadiene	NA	<2.8	<13	<2.6	<2.2
1,3-Dichlorobenzene	NA	<1.3	<6.1	<1.2	<1.0
1,3-Dichloropropane	NA	<0.99	<4.7	<0.93	<0.79
1,4-Dichlorobenzene	NA	<1.3	<6.1	<1.2	<1.0
1,4-Dioxane	NA	<1.5	<7.3	<1.5	<1.2
2-Butanone	NA	**18**	**12**	**4.2**	**20**
2-Hexanone	NA	**5.4**	<8.3	<1.7	<1.4
3-Chloropropene	NA	<3.4	<16	<3.2	<2.7
4-Methyl-2-pentanone	NA	<0.88	<4.1	<0.83	<0.70
Acetone	NA	**28**	**540**	**64**	**51**
Acrylonitrile	NA	<0.47	<2.2	<0.44	<0.37
Benzene	NA	**2.8**	**9.3**	**3.0**	**2.0**
Benzyl Chloride	NA	<1.1	<5.2	<1.0	<0.88
Bromodichloromethane	NA	<1.3	<6.3	<1.3	<1.1
Bromoform	NA	<2.2	<10	<2.1	<1.8
Bromomethane	NA	<0.83	<3.9	<0.78	<0.66
Carbon disulfide	NA	**0.73**	<3.1	<0.63	<0.53
Carbon tetrachloride	NA	<0.34	<1.6	<0.32	<0.27
Chlorobenzene	NA	<0.99	<4.6	<0.93	<0.79
Chloroethane	NA	<0.57	<2.7	<0.53	<0.45
Chloroform	NA	<1.0	**6.4**	**1.2**	<0.83
Chloromethane	NA	<0.44	<2.1	<0.42	<0.35
cis-1,2-Dichloroethylene	NA	<0.85	<4.0	<0.80	<0.68
cis-1,3-Dichloropropylene	NA	<0.97	<4.6	<0.91	<0.78
Cyclohexane	NA	**3.0**	**4.9**	**5.4**	**3.4**
Dibromochloromethane	NA	<1.7	<8.1	<1.6	<1.4
Dichlorodifluoromethane	NA	**2.3**	<5.0	**2.6**	**2.3**
Ethyl acetate	NA	<1.5	<7.3	<1.5	<1.2
Ethylbenzene	NA	**13**	**14**	**6.8**	**13**
Hexachlorobutadiene	NA	<2.3	<11	<2.2	<1.8
Isopropanol	NA	**1.1**	<5.0	<0.99	**1.8**
Methyl Methacrylate	NA	<0.88	<4.1	<0.83	<0.70
Methyl tert-butyl ether	NA	<0.77	<3.6	<0.73	<0.61
Methylene chloride	60	<1.5	<.7.0	<1.4	<1.2
n-Heptane	NA	**5.7**	**17**	**5.7**	**6.0**
n-Hexane	NA	**4.4**	**21**	**5.8**	**3.5**
Xylenes (o)	NA	**26**	**18**	**10**	**22**
Xylenes (m&p)	NA	**57**	**60**	**32**	**48**
p-Ethyltoluene	NA	**19**	**12**	**11**	**22**
Propylene	NA	<0.37	<1.7	<0.35	<0.29
Styrene	NA	<0.91	<4.3	<0.86	<0.73
Tetrachloroethylene	30	**4.8**	<1.7	**16**	**26**
Tetrahydrofuran	NA	**10**	<5.9	<1.2	**12**
Toluene	NA	**38**	**77**	**34**	**32**
trans-1,2-Dichloroethylene	NA	<0.85	<4.0	<0.80	<0.68
trans-1,3-Dichloropropylene	NA	<0.97	<4.6	<0.91	<0.78
Trichloroethylene	5	<0.29	<1.4	<0.27	<0.23
Trichlorofluoromethane	NA	**1.3**	<5.7	**1.5**	**17**
Vinyl acetate	NA	<0.76	<3.5	<0.71	<0.60
Vinyl bromide	NA	<0.94	<4.4	<0.88	<0.75
Vinyl chloride	NA	<0.55	<2.6	<0.52	<0.44

[1] Table 3.1, NYSDOH "Final Guidance for Evaluating Soil Vapor Intrusion in the State of New York" (October 2006)
Bolded values signify detection above method detection limit
Highlighted values signify detection above guidance value
NA = Guidance Value Not Available

APPENDIX 1

PROPOSED DEVELOPMENT PLANS

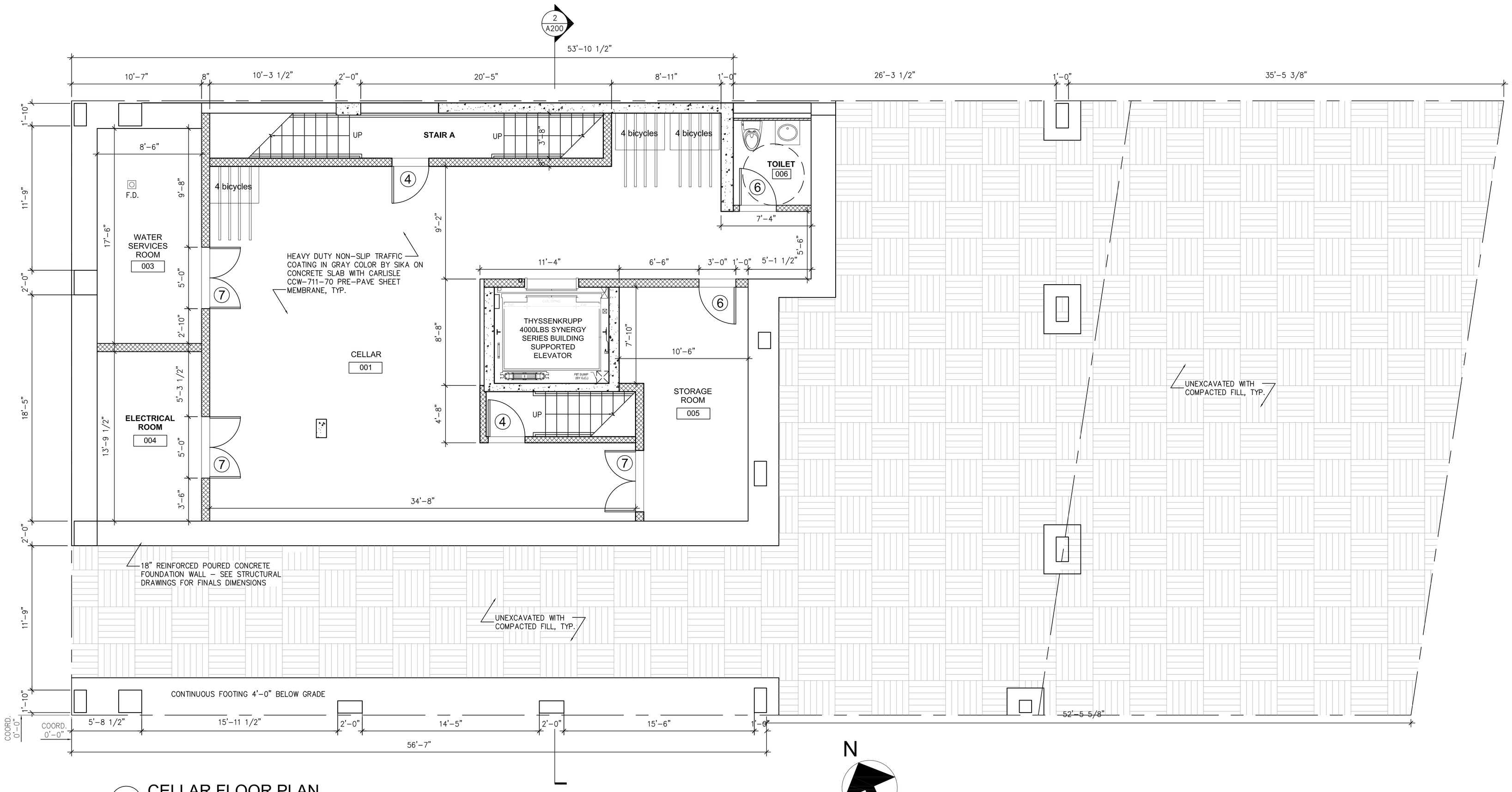

CELLAR FLOOR PLAN
SCALE: 1/4" = 1'-0"

N

WALL TYPE LEGEND

	EXISTING MASONRY WALL TO REMAIN
	EXTERIOR WALL- ALUMINUM COMPOSITE METAL PANEL WITH 1" XPS INSULATION + (2) LAYERS OF 5/8" DENSE-GLASS GOLD ON EXTERIOR SIDE AND (1) LAYER OF 5/8" GYP. BD. ON INTERIOR SIDE OF 6" METAL STUDS, 16 GA. @ 16" O.C. W/4" BATT INSULATION TO UNDERSIDE OF CONCRETE SLAB
	CAST IN PLACE CONCRETE WALL
	CONCRETE MASONRY WALL
8	3 HOUR FIRE RATED 8" CMU PARTITION AT TRASH CHUTE
0	2 HOUR FIRE RATED PARTITION: MASONRY EQUIVALENT (1) LAYER OF 5/8" THK IMPACT RESISTANCE GYP. BD. AND (1) LAYER OF 5/8" THK GYP. BD ON BOTH SIDES OF 3 5/8" MTL STUD, 20 GA MIN. @ 16" O.C. W/ 4" BATT INSULATION TO UNDERSIDE OF CONCRETE SLAB
1	2 HOUR FIRE RATED PARTITION: (2) LAYER OF 5/8" THK TYPE 'X' GYP. BD. ON BOTH SIDES OF 3 5/8" MTL STUD @16" O.C. W/ 4" BATT INSULATION TO UNDERSIDE OF CONCRETE SLAB
2	2 HOUR FIRE RATED SHAFT WALL: (1) LAYER OF 5/8" THK TYPE 'X" GYP. BD. ON BOTH SIDES OF 2 1/2" MTL I STUDS W/ 1"X24" TYPE X GYPSUM PANEL INSERTED BETWEEN 2 1/2" FLOOR AND CEILING TRACK
3	2 HOUR FIRE RATED PARTITION: (2) LAYER OF 5/8" THK TYPE 'X" GYP. BD. ON INTERIOR SIDE OF 2 1/2" METAL STUDS @16" O.C. TO UNDERSIDE OF CONCRETE SLAB
4	1 HOUR FIRE RATED PARTITION: (1) LAYER OF 5/8" THK TYPE 'X" GYP. BD. ON BOTH SIDES OF 3 5/8" MTL STUD @16" O.C. W/ 4" BATT INSULATION TO UNDERSIDE OF CONCRETE SLAB
5	INTERIOR FURRING PARTITION: (1) LAYER OF 5/8" THK TYPE 'X" GYP. BD. ON INTERIOR SIDES OF 2 1/2" MTL STUD @16" O.C. W/ 2" BATT INSULATION TO UNDERSIDE OF CONCRETE SLAB
6	INTERIOR FURRING PARTITION: (1) LAYER OF 5/8" THK TYPE 'X" GYP. BD. ON INTERIOR SIDES OF 7/8" MTL FURRING STRIP @16" O.C. TO UNDERSIDE OF CONCRETE SLAB
7	INTERIOR KNEE WALL PARTITION: (1) LAYER OF 5/8" THK TYPE 'X" GYP. BD. ON BOTH SIDES OF 3 5/8" MTL STUDS @16" O.C. TO UNDERSIDE OF COUNTER TOP
11	INTERIOR CHASE WALL PARTITION: (1) LAYER OF 5/8" THK TYPE 'X" GYP. BD. ON 1 5/8" METAL STUDS @16" O.C. TO UNDERSIDE OF CONCRETE SLAB ON BOTH SIDES OF 4" CHASE SPACE

ARCHITECT:
MORALI ARCHITECT
505 8th AVENUE, SUITE 2202, NEW YORK, NY, 10018
TEL. 212 219 2091 E-MAIL: MSTUDIONY@AOL.COM

ENGINEERING GROUP ASSOCIATES, PC
19 W 21ST STREET RM 1103 NY, NY, 10010 TEL: 212 982 1410

IMA ENGINEERING , PC
123-23 82 AVENUE, KEW GARDENS, NY, 11415 TEL: 718 268 8600

ADVANCED CLEANUP TECHNOLOGIES, INC.
110 MAIN STREET, SUITE 103, PORT WASHINGTON, NY, 11050

COPYRIGHT (C)
THESE PLAN ARE AN INSTRUMENT OF SERVICE AND ARE THE PROPERTY OF THE ARCHITECT.
This and all documents produced by this firm under this agreement shall remain the sole property of this firm and may not be used, copied, changed or distributed by the client or others without the written consent of this firm.
INFRINGEMENTS WILL BE PROSECUTED.

CONTRACTOR SHALL VERIFY ALL CONDITIONS AND MEASUREMENTS IN THE FIELD AND BE RESPONSIBLE FOR FIELD FIT AND QUANTITY OF WORK. NO ALLOWANCES SHALL BE MADE IN BEHALF OF THE CONTRACTOR FOR ANY ERROR OR NEGLECT ON HIS PART.

"THIS PLAN IS APPROVED ONLY FOR WORK INDICATED ON THE APPLICATION SPECIFICATION SHEET. ALL OTHER MATTERS SHOWN ARE NOT TO BE RELIED UPON, OR TO BE CONSIDERED AS EITHER BEING APPROVED OR IN ACCORDANCE WITH APPLICABLE CODES."

No.	Description	Date

PROJECT
36-33 31ST STREET
LONG ISLAND CITY, NY
11106

CELLAR FLOOR PLAN

SCALE : AS NOTED

SEAL:

Date	09.17.15
Project Number	1507
Drawn By	CI
Checked By	AM

A-100.00

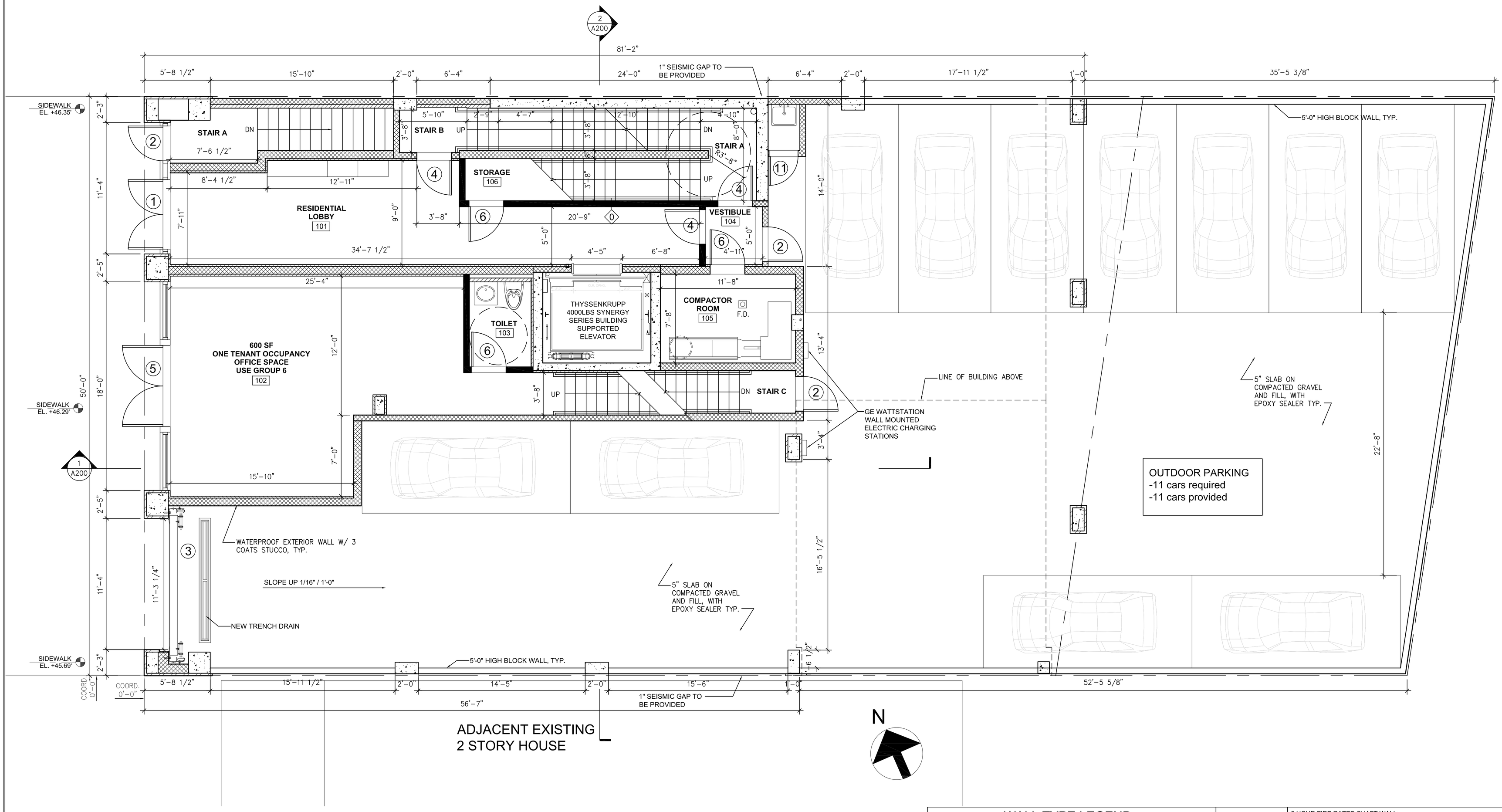

FIRST FLOOR PLAN
SCALE: 1/4" = 1'-0"

WALL TYPE LEGEND

	EXISTING MASONRY WALL TO REMAIN
	EXTERIOR WALL- ALUMINUM COMPOSITE METAL PANEL WITH 1" XPS INSULATION + (2) LAYERS OF 5/8" DENSE-GLASS GOLD ON EXTERIOR SIDE AND (1) LAYER OF 5/8" GYP. BD. ON INTERIOR SIDE OF 6" METAL STUDS, 16 GA. @ 16" O.C. W/4" BATT INSULATION TO UNDERSIDE OF CONCRETE SLAB
	CAST IN PLACE CONCRETE WALL
	CONCRETE MASONRY WALL
8	3 HOUR FIRE RATED 8" CMU PARTITION AT TRASH CHUTE
0	2 HOUR FIRE RATED PARTITION: MASONRY EQUIVALENT (1) LAYER OF 5/8" THK IMPACT RESISTANCE GYP. BD. AND (1) LAYER OF 5/8" THK GYP. BD ON BOTH SIDES OF 3 5/8" MTL STUD, 20 GA MIN. @ 16" O.C. W/ 4" BATT INSULATION TO UNDERSIDE OF CONCRETE SLAB
1	2 HOUR FIRE RATED PARTITION: (2) LAYER OF 5/8" THK TYPE 'X" GYP. BD. ON BOTH SIDES OF 3 5/8" MTL STUD @16" O.C. W/ 4" BATT INSULATION TO UNDERSIDE OF CONCRETE SLAB
2	2 HOUR FIRE RATED SHAFT WALL: (1) LAYER OF 5/8" THK TYPE 'X" GYP. BD. ON BOTH SIDES OF 2 1/2" MTL I STUDS W/ 1"X24" TYPE X GYPSUM PANEL INSERTED BETWEEN 2 1/2" FLOOR AND CEILING TRACK
3	2 HOUR FIRE RATED PARTITION: (2) LAYER OF 5/8" THK TYPE 'X" GYP. BD. ON INTERIOR SIDE OF 2 1/2" METAL STUDS @16" O.C. TO UNDERSIDE OF CONCRETE SLAB
4	1 HOUR FIRE RATED PARTITION: (1) LAYER OF 5/8" THK TYPE 'X" GYP. BD. ON BOTH SIDES OF 3 5/8" MTL STUD @16" O.C. W/ 4" BATT INSULATION TO UNDERSIDE OF CONCRETE SLAB
5	INTERIOR FURRING PARTITION: (1) LAYER OF 5/8" THK TYPE 'X" GYP. BD. ON INTERIOR SIDES OF 2 1/2" MTL STUD @16" O.C. W/ 2" BATT INSULATION TO UNDERSIDE OF CONCRETE SLAB
6	INTERIOR FURRING PARTITION: (1) LAYER OF 5/8" THK TYPE 'X" GYP. BD. ON INTERIOR SIDES OF 7/8" MTL FURRING STRIP @16" O.C. TO UNDERSIDE OF CONCRETE SLAB
7	INTERIOR KNEE WALL PARTITION: (1) LAYER OF 5/8" THK TYPE 'X" GYP. BD. ON BOTH SIDES OF 3 5/8" MTL STUDS @16" O.C. TO UNDERSIDE OF COUNTER TOP
11	INTERIOR CHASE WALL PARTITION: (1) LAYER OF 5/8" THK TYPE 'X" GYP. BD. ON 1 5/8" METAL STUDS @16" O.C. TO UNDERSIDE OF CONCRETE SLAB ON BOTH SIDES OF 4" CHASE SPACE

ARCHITECT:
MORALI ARCHITECT
505 8th AVENUE, SUITE 2202, NEW YORK, NY, 10018
TEL. 212 219 2091 E-MAIL: MSTUDIONY@AOL.COM

ENGINEERING GROUP ASSOCIATES, PC
19 W 21ST STREET RM 1103 NY, NY, 10010 TEL: 212 982 1410

IMA ENGINEERING , PC
123-23 82 AVENUE, KEW GARDENS, NY, 11415 TEL: 718 268 8600

ADVANCED CLEANUP TECHNOLOGIES, INC.
110 MAIN STREET, SUITE 103, PORT WASHINGTON, NY, 11050

COPYRIGHT (C)
THESE PLAN ARE AN INSTRUMENT OF SERVICE AND ARE THE PROPERTY OF THE ARCHITECT.
This and all documents produced by this firm under this agreement shall remain the sole property of this firm and may not be used, copied, changed or distributed by the client or others without the written consent of this firm.
INFRINGEMENTS WILL BE PROSECUTED.

CONTRACTOR SHALL VERIFY ALL CONDITIONS AND MEASUREMENTS IN THE FIELD AND BE RESPONSIBLE FOR FIELD FIT AND QUANTITY OF WORK. NO ALLOWANCES SHALL BE MADE IN BEHALF OF THE CONTRACTOR FOR ANY ERROR OR NEGLECT ON HIS PART.

"THIS PLAN IS APPROVED ONLY FOR WORK INDICATED ON THE APPLICATION SPECIFICATION SHEET. ALL OTHER MATTERS SHOWN ARE NOT TO BE RELIED UPON, OR TO BE CONSIDERED AS EITHER BEING APPROVED OR IN ACCORDANCE WITH APPLICABLE CODES."

No.	Description	Date

PROJECT
36-33 31ST STREET
LONG ISLAND CITY, NY
11106

FIRST FLOOR PLAN

SCALE : AS NOTED

SEAL:

Date	09.17.15
Project Number	1507
Drawn By	CI
Checked By	AM

A-101.00

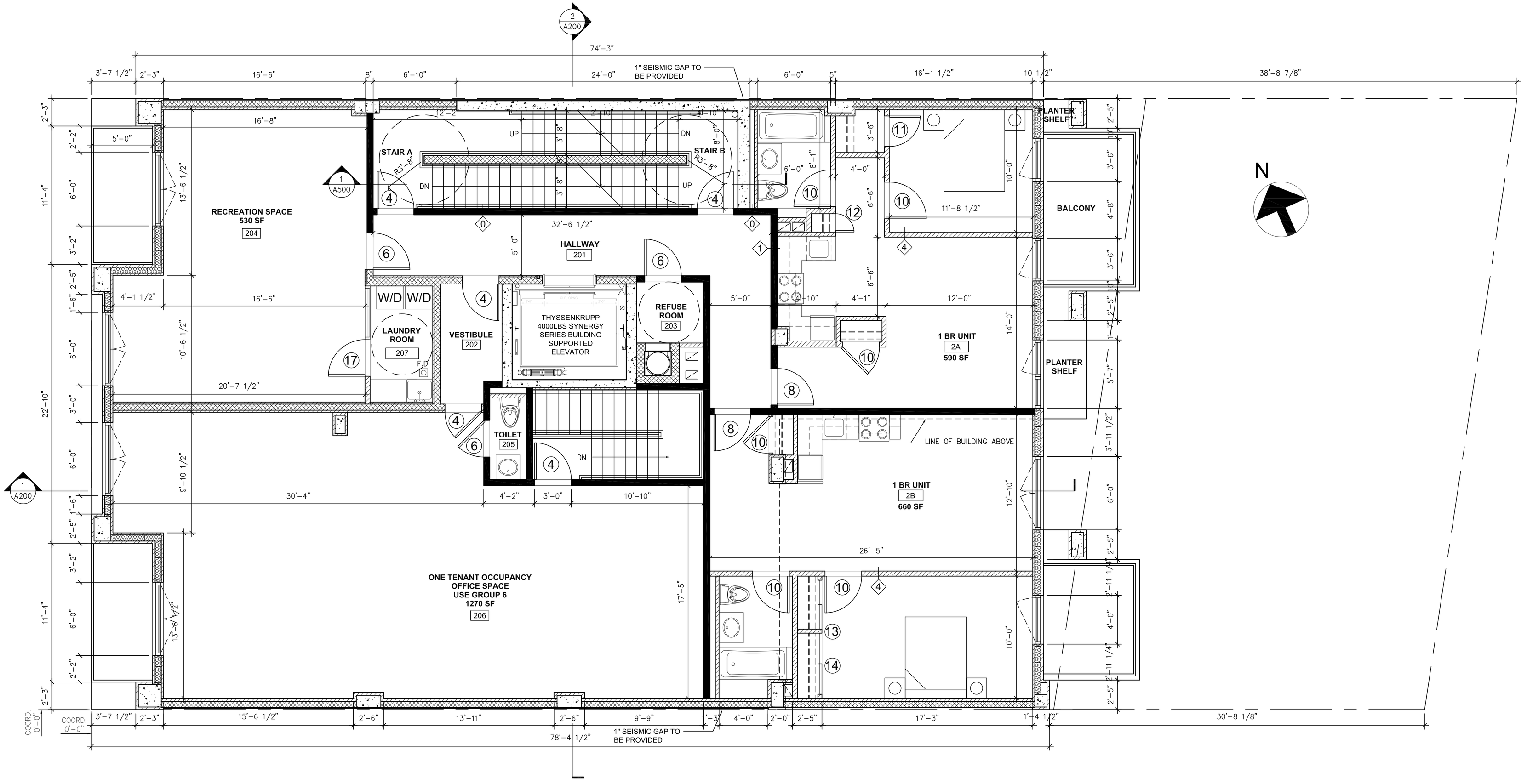

SECOND FLOOR PLAN
SCALE: 1/4" = 1'-0"

WALL TYPE LEGEND

	EXISTING MASONRY WALL TO REMAIN
	EXTERIOR WALL- ALUMINUM COMPOSITE METAL PANEL WITH 1" XPS INSULATION + (2) LAYERS OF 5/8" DENSE-GLASS GOLD ON EXTERIOR SIDE AND (1) LAYER OF 5/8" GYP. BD. ON INTERIOR SIDE OF 6" METAL STUDS, 16 GA. @ 16" O.C. W/4" BATT INSULATION TO UNDERSIDE OF CONCRETE SLAB
	CAST IN PLACE CONCRETE WALL
	CONCRETE MASONRY WALL
8	3 HOUR FIRE RATED 8" CMU PARTITION AT TRASH CHUTE
0	2 HOUR FIRE RATED PARTITION: MASONRY EQUIVALENT (1) LAYER OF 5/8" THK IMPACT RESISTANCE GYP. BD. AND (1) LAYER OF 5/8" THK GYP. BD ON BOTH SIDES OF 3 5/8" MTL STUD, 20 GA MIN. @ 16" O.C. W/ 4" BATT INSULATION TO UNDERSIDE OF CONCRETE SLAB
1	2 HOUR FIRE RATED PARTITION: (2) LAYER OF 5/8" THK TYPE 'X" GYP. BD. ON BOTH SIDES OF 3 5/8" MTL STUD @16" O.C. W/ 4" BATT INSULATION TO UNDERSIDE OF CONCRETE SLAB
2	2 HOUR FIRE RATED SHAFT WALL: (1) LAYER OF 5/8" THK TYPE 'X" GYP. BD. ON BOTH SIDES OF 2 1/2" MTL I STUDS W/ 1"X24" TYPE X GYPSUM PANEL INSERTED BETWEEN 2 1/2" FLOOR AND CEILING TRACK
3	2 HOUR FIRE RATED PARTITION: (2) LAYER OF 5/8" THK TYPE 'X" GYP. BD. ON INTERIOR SIDE OF 2 1/2" METAL STUDS @16" O.C. TO UNDERSIDE OF CONCRETE SLAB
4	1 HOUR FIRE RATED PARTITION: (1) LAYER OF 5/8" THK TYPE 'X" GYP. BD. ON BOTH SIDES OF 3 5/8" MTL STUD @16" O.C. W/ 4" BATT INSULATION TO UNDERSIDE OF CONCRETE SLAB
5	INTERIOR FURRING PARTITION: (1) LAYER OF 5/8" THK TYPE 'X" GYP. BD. ON INTERIOR SIDES OF 2 1/2" MTL STUD @16" O.C. W/ 2" BATT INSULATION TO UNDERSIDE OF CONCRETE SLAB
6	INTERIOR FURRING PARTITION: (1) LAYER OF 5/8" THK TYPE 'X" GYP. BD. ON INTERIOR SIDES OF 7/8" MTL FURRING STRIP @16" O.C. TO UNDERSIDE OF CONCRETE SLAB
7	INTERIOR KNEE WALL PARTITION: (1) LAYER OF 5/8" THK TYPE 'X" GYP. BD. ON BOTH SIDES OF 3 5/8" MTL STUDS @16" O.C. TO UNDERSIDE OF COUNTER TOP
17	INTERIOR CHASE WALL PARTITION: (1) LAYER OF 5/8" THK TYPE 'X" GYP. BD. ON 1 5/8" METAL STUDS @16" O.C. TO UNDERSIDE OF CONCRETE SLAB ON BOTH SIDES OF 4" CHASE SPACE

ARCHITECT:
MORALI ARCHITECT
505 8th AVENUE, SUITE 2202, NEW YORK, NY, 10018
TEL. 212 219 2091 E-MAIL: MSTUDIONY@AOL.COM

ENGINEERING GROUP ASSOCIATES, PC
19 W 21ST STREET RM 1103 NY, NY, 10010 TEL: 212 982 1410

IMA ENGINEERING , PC
123-23 82 AVENUE, KEW GARDENS, NY, 11415 TEL: 718 268 8600

ADVANCED CLEANUP TECHNOLOGIES, INC.
110 MAIN STREET, SUITE 103, PORT WASHINGTON, NY, 11050

COPYRIGHT (C)
THESE PLAN ARE AN INSTRUMENT OF SERVICE AND ARE THE PROPERTY OF THE ARCHITECT.
This and all documents produced by this firm under this agreement shall remain the sole property of this firm and may not be used, copied, changed or distributed by the client or others without the written consent of this firm.
INFRINGEMENTS WILL BE PROSECUTED.

CONTRACTOR SHALL VERIFY ALL CONDITIONS AND MEASUREMENTS IN THE FIELD AND BE RESPONSIBLE FOR FIELD FIT AND QUANTITY OF WORK. NO ALLOWANCES SHALL BE MADE IN BEHALF OF THE CONTRACTOR FOR ANY ERROR OR NEGLECT ON HIS PART.

"THIS PLAN IS APPROVED ONLY FOR WORK INDICATED ON THE APPLICATION SPECIFICATION SHEET. ALL OTHER MATTERS SHOWN ARE NOT TO BE RELIED UPON, OR TO BE CONSIDERED AS EITHER BEING APPROVED OR IN ACCORDANCE WITH APPLICABLE CODES."

No.	Description	Date

PROJECT
36-33 31ST STREET
LONG ISLAND CITY, NY
11106

SECOND FLOOR PLAN

SCALE : AS NOTED

SEAL:

Date	09.17.15
Project Number	1507
Drawn By	CI
Checked By	AM

A-102.00

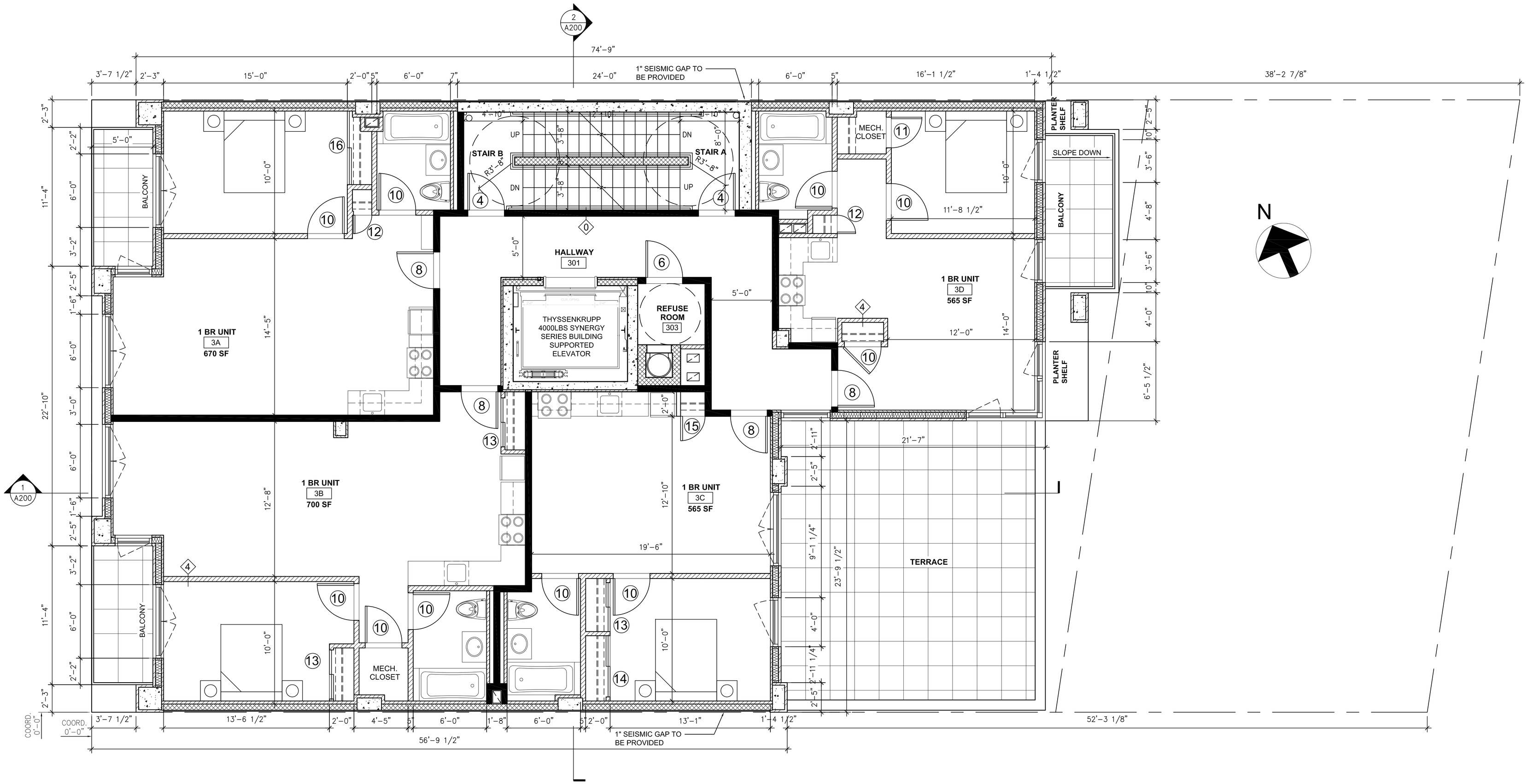

THIRD FLOOR PLAN
SCALE: 1/4" = 1'-0"

WALL TYPE LEGEND

	EXISTING MASONRY WALL TO REMAIN
	EXTERIOR WALL- ALUMINUM COMPOSITE METAL PANEL WITH 1" XPS INSULATION + (2) LAYERS OF 5/8" DENSE-GLASS GOLD ON EXTERIOR SIDE AND (1) LAYER OF 5/8" GYP. BD. ON INTERIOR SIDE OF 6" METAL STUDS, 16 GA. @ 16" O.C. W/4" BATT INSULATION TO UNDERSIDE OF CONCRETE SLAB
	CAST IN PLACE CONCRETE WALL
	CONCRETE MASONRY WALL
8	3 HOUR FIRE RATED 8" CMU PARTITION AT TRASH CHUTE
0	2 HOUR FIRE RATED PARTITION: MASONRY EQUIVALENT (1) LAYER OF 5/8" THK IMPACT RESISTANCE GYP. BD. AND (1) LAYER OF 5/8" THK GYP. BD ON BOTH SIDES OF 3 5/8" MTL STUD, 20 GA MIN. @ 16" O.C. W/ 4" BATT INSULATION TO UNDERSIDE OF CONCRETE SLAB
1	2 HOUR FIRE RATED PARTITION: (2) LAYER OF 5/8" THK TYPE 'X" GYP. BD. ON BOTH SIDES OF 3 5/8" MTL STUD @16" O.C. W/ 4" BATT INSULATION TO UNDERSIDE OF CONCRETE SLAB
2	2 HOUR FIRE RATED SHAFT WALL: (1) LAYER OF 5/8" THK TYPE 'X" GYP. BD. ON BOTH SIDES OF 2 1/2" MTL I STUDS W/ 1"X24" TYPE X GYPSUM PANEL INSERTED BETWEEN 2 1/2" FLOOR AND CEILING TRACK
3	2 HOUR FIRE RATED PARTITION: (2) LAYER OF 5/8" THK TYPE 'X" GYP. BD. ON INTERIOR SIDE OF 2 1/2" METAL STUDS @16" O.C. TO UNDERSIDE OF CONCRETE SLAB
4	1 HOUR FIRE RATED PARTITION: (1) LAYER OF 5/8" THK TYPE 'X" GYP. BD. ON BOTH SIDES OF 3 5/8" MTL STUD @16" O.C. W/ 4" BATT INSULATION TO UNDERSIDE OF CONCRETE SLAB
5	INTERIOR FURRING PARTITION: (1) LAYER OF 5/8" THK TYPE 'X" GYP. BD. ON INTERIOR SIDES OF 2 1/2" MTL STUD @16" O.C. W/ 2" BATT INSULATION TO UNDERSIDE OF CONCRETE SLAB
6	INTERIOR FURRING PARTITION: (1) LAYER OF 5/8" THK TYPE 'X" GYP. BD. ON INTERIOR SIDES OF 7/8" MTL FURRING STRIP @16" O.C. TO UNDERSIDE OF CONCRETE SLAB
7	INTERIOR KNEE WALL PARTITION: (1) LAYER OF 5/8" THK TYPE 'X" GYP. BD. ON BOTH SIDES OF 3 5/8" MTL STUDS @16" O.C. TO UNDERSIDE OF COUNTER TOP
11	INTERIOR CHASE WALL PARTITION: (1) LAYER OF 5/8" THK TYPE 'X" GYP. BD. ON 1 5/8" METAL STUDS @16" O.C. TO UNDERSIDE OF CONCRETE SLAB ON BOTH SIDES OF 4" CHASE SPACE

ARCHITECT:
MORALI ARCHITECT
505 8th AVENUE, SUITE 2202, NEW YORK, NY, 10018
TEL. 212 219 2091 E-MAIL: MSTUDIONY@AOL.COM

ENGINEERING GROUP ASSOCIATES, PC
19 W 21ST STREET RM 1103 NY, NY, 10010 TEL: 212 982 1410

IMA ENGINEERING , PC
123-23 82 AVENUE, KEW GARDENS, NY, 11415 TEL: 718 268 8600

ADVANCED CLEANUP TECHNOLOGIES, INC.
110 MAIN STREET, SUITE 103, PORT WASHINGTON, NY, 11050

COPYRIGHT (C).
THESE PLAN ARE AN INSTRUMENT OF SERVICE AND ARE THE PROPERTY OF THE ARCHITECT.
This and all documents produced by this firm under this agreement shall remain the sole property of this firm and may not be used, copied, changed or distributed by the client or others without the written consent of this firm.
INFRINGEMENTS WILL BE PROSECUTED.

CONTRACTOR SHALL VERIFY ALL CONDITIONS AND MEASUREMENTS IN THE FIELD AND BE RESPONSIBLE FOR FIELD FIT AND QUANTITY OF WORK. NO ALLOWANCES SHALL BE MADE IN BEHALF OF THE CONTRACTOR FOR ANY ERROR OR NEGLECT ON HIS PART.

"THIS PLAN IS APPROVED ONLY FOR WORK INDICATED ON THE APPLICATION SPECIFICATION SHEET. ALL OTHER MATTERS SHOWN ARE NOT TO BE RELIED UPON, OR TO BE CONSIDERED AS EITHER BEING APPROVED OR IN ACCORDANCE WITH APPLICABLE CODES."

No.	Description	Date

PROJECT
36-33 31ST STREET
LONG ISLAND CITY, NY
11106

THIRD FLOOR PLAN

SCALE : AS NOTED

SEAL:

Date	09.17.15
Project Number	1507
Drawn By	CI
Checked By	AM

A-103.00

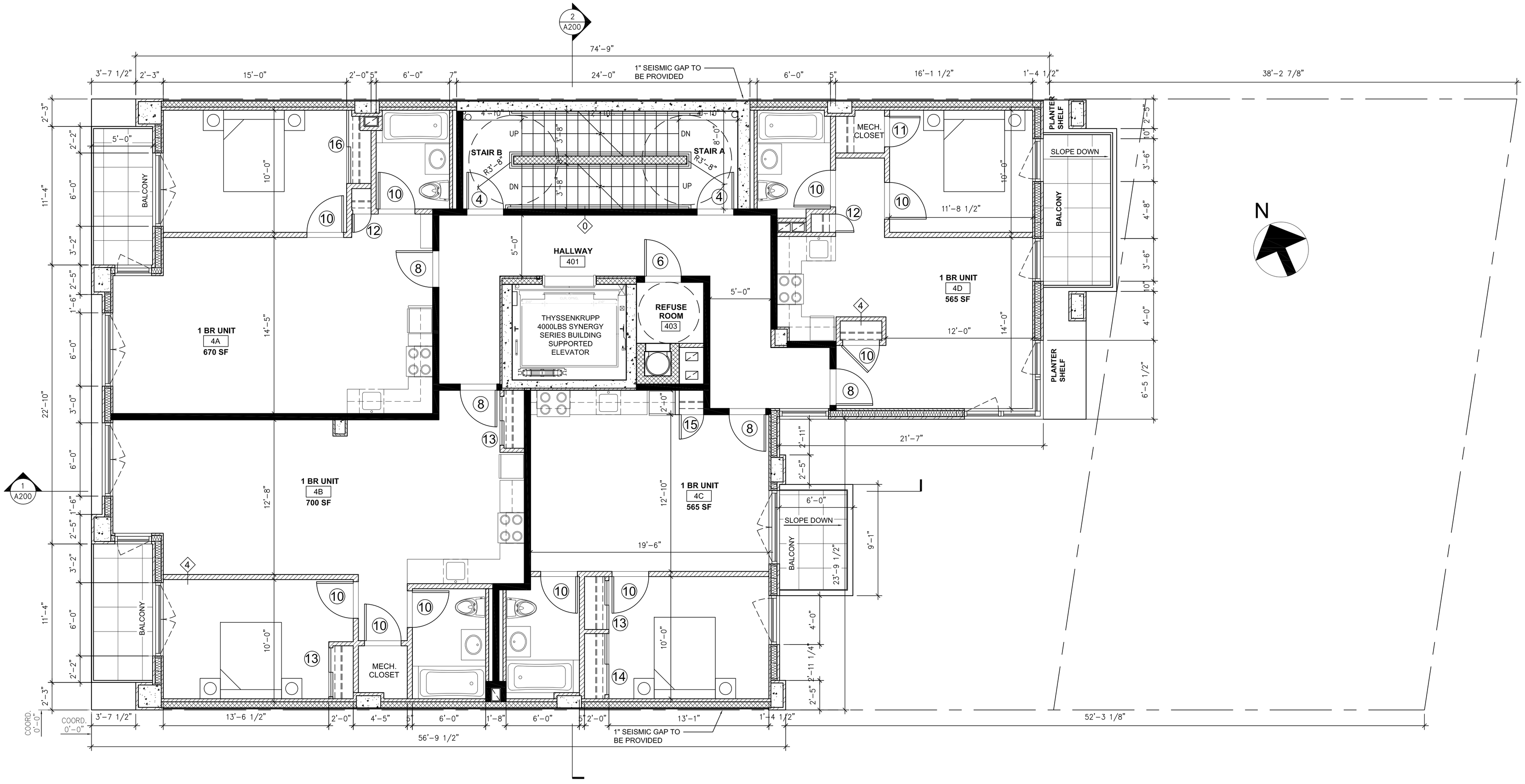

N

FOURTH FLOOR PLAN
SCALE: 1/4" = 1'-0"

WALL TYPE LEGEND

	EXISTING MASONRY WALL TO REMAIN
	EXTERIOR WALL- ALUMINUM COMPOSITE METAL PANEL WITH 1" XPS INSULATION + (2) LAYERS OF 5/8" DENSE-GLASS GOLD ON EXTERIOR SIDE AND (1) LAYER OF 5/8" GYP. BD. ON INTERIOR SIDE OF 6" METAL STUDS, 16 GA. @ 16" O.C. W/4" BATT INSULATION TO UNDERSIDE OF CONCRETE SLAB
	CAST IN PLACE CONCRETE WALL
	CONCRETE MASONRY WALL
8	3 HOUR FIRE RATED 8" CMU PARTITION AT TRASH CHUTE
0	2 HOUR FIRE RATED PARTITION: MASONRY EQUIVALENT (1) LAYER OF 5/8" THK IMPACT RESISTANCE GYP. BD. AND (1) LAYER OF 5/8" THK GYP. BD ON BOTH SIDES OF 3 5/8" MTL STUD, 20 GA MIN. @ 16" O.C. W/ 4" BATT INSULATION TO UNDERSIDE OF CONCRETE SLAB
1	2 HOUR FIRE RATED PARTITION: (2) LAYER OF 5/8" THK TYPE 'X" GYP. BD. ON BOTH SIDES OF 3 5/8" MTL STUD @16" O.C. W/ 4" BATT INSULATION TO UNDERSIDE OF CONCRETE SLAB
2	2 HOUR FIRE RATED SHAFT WALL: (1) LAYER OF 5/8" THK TYPE 'X" GYP. BD. ON BOTH SIDES OF 2 1/2" MTL I STUDS W/ 1"X24" TYPE X GYPSUM PANEL INSERTED BETWEEN 2 1/2" FLOOR AND CEILING TRACK
3	2 HOUR FIRE RATED PARTITION: (2) LAYER OF 5/8" THK TYPE 'X" GYP. BD. ON INTERIOR SIDE OF 2 1/2" METAL STUDS @16" O.C. TO UNDERSIDE OF CONCRETE SLAB
4	1 HOUR FIRE RATED PARTITION: (1) LAYER OF 5/8" THK TYPE 'X" GYP. BD. ON BOTH SIDES OF 3 5/8" MTL STUD @16" O.C. W/ 4" BATT INSULATION TO UNDERSIDE OF CONCRETE SLAB
5	INTERIOR FURRING PARTITION: (1) LAYER OF 5/8" THK TYPE 'X" GYP. BD. ON INTERIOR SIDES OF 2 1/2" MTL STUD @16" O.C. W/ 2" BATT INSULATION TO UNDERSIDE OF CONCRETE SLAB
6	INTERIOR FURRING PARTITION: (1) LAYER OF 5/8" THK TYPE 'X" GYP. BD. ON INTERIOR SIDES OF 7/8" MTL FURRING STRIP @16" O.C. TO UNDERSIDE OF CONCRETE SLAB
7	INTERIOR KNEE WALL PARTITION: (1) LAYER OF 5/8" THK TYPE 'X" GYP. BD. ON BOTH SIDES OF 3 5/8" MTL STUDS @16" O.C. TO UNDERSIDE OF COUNTER TOP
11	INTERIOR CHASE WALL PARTITION: (1) LAYER OF 5/8" THK TYPE 'X" GYP. BD. ON 1 5/8" METAL STUDS @16" O.C. TO UNDERSIDE OF CONCRETE SLAB ON BOTH SIDES OF 4" CHASE SPACE

ARCHITECT:
MORALI ARCHITECT
505 8th AVENUE, SUITE 2202, NEW YORK, NY, 10018
TEL. 212 219 2091 E-MAIL: MSTUDIONY@AOL.COM

ENGINEERING GROUP ASSOCIATES, PC
19 W 21ST STREET RM 1103 NY, NY, 10010 TEL: 212 982 1410

IMA ENGINEERING , PC
123-23 82 AVENUE, KEW GARDENS, NY, 11415 TEL: 718 268 8600

ADVANCED CLEANUP TECHNOLOGIES, INC.
110 MAIN STREET, SUITE 103, PORT WASHINGTON, NY, 11050

COPYRIGHT (C)
THESE PLAN ARE AN INSTRUMENT OF SERVICE AND ARE THE PROPERTY OF THE ARCHITECT.
This and all documents produced by this firm under this agreement shall remain the sole property of this firm and may not be used, copied, changed or distributed by the client or others without the written consent of this firm.
INFRINGEMENTS WILL BE PROSECUTED.

CONTRACTOR SHALL VERIFY ALL CONDITIONS AND MEASUREMENTS IN THE FIELD AND BE RESPONSIBLE FOR FIELD FIT AND QUANTITY OF WORK. NO ALLOWANCES SHALL BE MADE IN BEHALF OF THE CONTRACTOR FOR ANY ERROR OR NEGLECT ON HIS PART.

"THIS PLAN IS APPROVED ONLY FOR WORK INDICATED ON THE APPLICATION SPECIFICATION SHEET. ALL OTHER MATTERS SHOWN ARE NOT TO BE RELIED UPON, OR TO BE CONSIDERED AS EITHER BEING APPROVED OR IN ACCORDANCE WITH APPLICABLE CODES."

No.	Description	Date

PROJECT
36-33 31ST STREET
LONG ISLAND CITY, NY
11106

FOURTH FLOOR PLAN

SCALE : AS NOTED

SEAL:

Date	09.17.15
Project Number	1507
Drawn By	CI
Checked By	AM

A-104.00

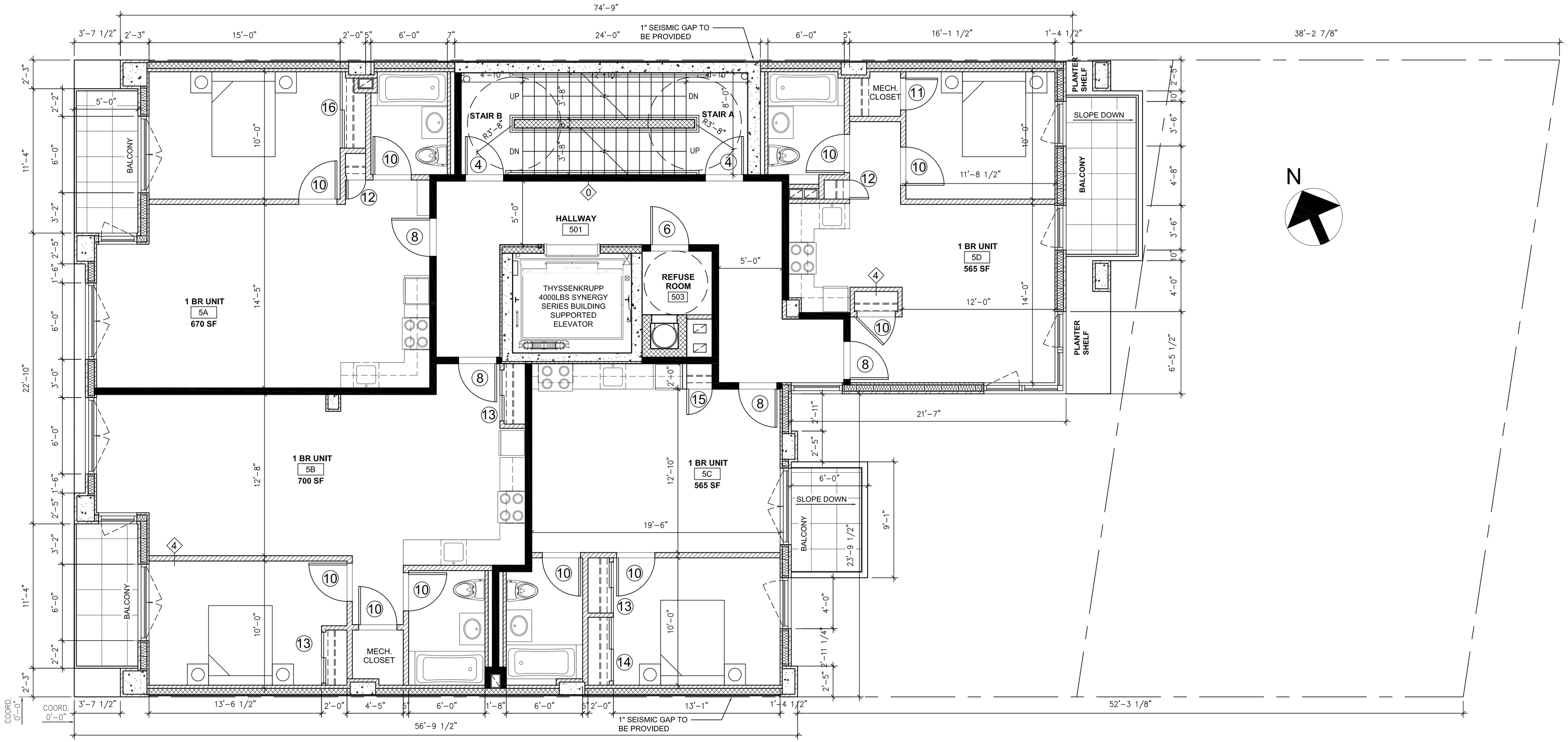

FIFTH FLOOR PLAN
SCALE: 1/4" = 1'-0"

WALL TYPE LEGEND

	EXISTING MASONRY WALL TO REMAIN
	EXTERIOR WALL- ALUMINUM COMPOSITE METAL PANEL WITH 1" XPS INSULATION + (2) LAYERS OF 5/8" DENSE-GLASS GOLD ON EXTERIOR SIDE AND (1) LAYER OF 5/8" GYP. BD. ON INTERIOR SIDE OF 6" METAL STUDS, 16 GA. @ 16" O.C. W/4" BATT INSULATION TO UNDERSIDE OF CONCRETE SLAB
	CAST IN PLACE CONCRETE WALL
	CONCRETE MASONRY WALL
8	3 HOUR FIRE RATED 8" CMU PARTITION AT TRASH CHUTE
0	2 HOUR FIRE RATED PARTITION: MASONRY EQUIVALENT (1) LAYER OF 5/8" THK IMPACT RESISTANCE GYP. BD. AND (1) LAYER OF 5/8" THK GYP. BD ON BOTH SIDES OF 3 5/8" MTL STUD, 20 GA MIN. @ 16" O.C. W/ 4" BATT INSULATION TO UNDERSIDE OF CONCRETE SLAB
1	2 HOUR FIRE RATED PARTITION: (2) LAYER OF 5/8" THK TYPE 'X" GYP. BD. ON BOTH SIDES OF 3 5/8" MTL STUD @16" O.C. W/ 4" BATT INSULATION TO UNDERSIDE OF CONCRETE SLAB
2	2 HOUR FIRE RATED SHAFT WALL: (1) LAYER OF 5/8" THK TYPE 'X" GYP. BD. ON BOTH SIDES OF 2 1/2" MTL I STUDS W/ 1"X24" TYPE X GYPSUM PANEL INSERTED BETWEEN 2 1/2" FLOOR AND CEILING TRACK
3	2 HOUR FIRE RATED PARTITION: (2) LAYER OF 5/8" THK TYPE 'X" GYP. BD. ON INTERIOR SIDE OF 2 1/2" METAL STUDS @16" O.C. TO UNDERSIDE OF CONCRETE SLAB
4	1 HOUR FIRE RATED PARTITION: (1) LAYER OF 5/8" THK TYPE 'X" GYP. BD. ON BOTH SIDES OF 3 5/8" MTL STUD @16" O.C. W/ 4" BATT INSULATION TO UNDERSIDE OF CONCRETE SLAB
5	INTERIOR FURRING PARTITION: (1) LAYER OF 5/8" THK TYPE 'X" GYP. BD. ON INTERIOR SIDES OF 2 1/2" MTL STUD @16" O.C. W/ 2" BATT INSULATION TO UNDERSIDE OF CONCRETE SLAB
6	INTERIOR FURRING PARTITION: (1) LAYER OF 5/8" THK TYPE 'X" GYP. BD. ON INTERIOR SIDES OF 7/8" MTL FURRING STRIP @16" O.C. TO UNDERSIDE OF CONCRETE SLAB
7	INTERIOR KNEE WALL PARTITION: (1) LAYER OF 5/8" THK TYPE 'X" GYP. BD. ON BOTH SIDES OF 3 5/8" MTL STUDS @16" O.C. TO UNDERSIDE OF COUNTER TOP
11	INTERIOR CHASE WALL PARTITION: (1) LAYER OF 5/8" THK TYPE 'X" GYP. BD. ON 1 5/8" METAL STUDS @16" O.C. TO UNDERSIDE OF CONCRETE SLAB ON BOTH SIDES OF 4" CHASE SPACE

ARCHITECT:
MORALI ARCHITECT
505 8th AVENUE, SUITE 2202, NEW YORK, NY, 10018
TEL. 212 219 2091 E-MAIL: MSTUDIONY@AOL.COM

ENGINEERING GROUP ASSOCIATES, PC
19 W 21ST STREET RM 1103 NY, NY, 10010 TEL: 212 982 1410

IMA ENGINEERING , PC
123-23 82 AVENUE, KEW GARDENS, NY, 11415 TEL: 718 268 8600

ADVANCED CLEANUP TECHNOLOGIES, INC.
110 MAIN STREET, SUITE 103, PORT WASHINGTON, NY, 11050

COPYRIGHT (C)
THESE PLAN ARE AN INSTRUMENT OF SERVICE AND ARE THE PROPERTY OF THE ARCHITECT.
This and all documents produced by this firm under this agreement shall remain the sole property of this firm and may not be used, copied, changed or distributed by the client or others without the written consent of this firm.
INFRINGEMENTS WILL BE PROSECUTED.

CONTRACTOR SHALL VERIFY ALL CONDITIONS AND MEASUREMENTS IN THE FIELD AND BE RESPONSIBLE FOR FIELD FIT AND QUANTITY OF WORK. NO ALLOWANCES SHALL BE MADE IN BEHALF OF THE CONTRACTOR FOR ANY ERROR OR NEGLECT ON HIS PART.

"THIS PLAN IS APPROVED ONLY FOR WORK INDICATED ON THE APPLICATION SPECIFICATION SHEET. ALL OTHER MATTERS SHOWN ARE NOT TO BE RELIED UPON, OR TO BE CONSIDERED AS EITHER BEING APPROVED OR IN ACCORDANCE WITH APPLICABLE CODES."

No.	Description	Date

PROJECT
36-33 31ST STREET
LONG ISLAND CITY, NY
11106

FIFTH FLOOR PLAN

SCALE : AS NOTED

SEAL:

Date	09.17.15
Project Number	1507
Drawn By	CI
Checked By	AM

A-105.00

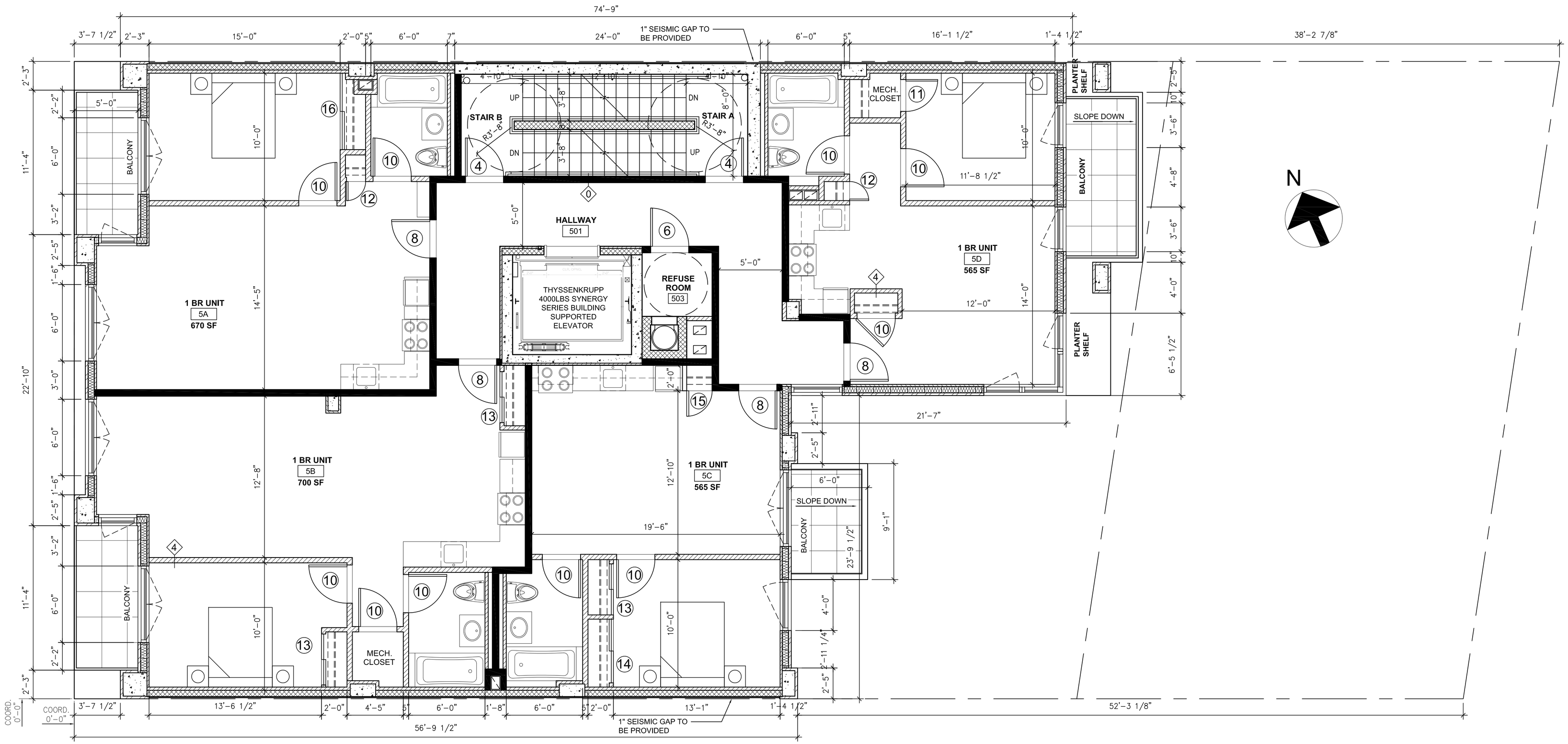

SIXTH FLOOR PLAN
SCALE: 1/4" = 1'-0"

WALL TYPE LEGEND	
	EXISTING MASONRY WALL TO REMAIN
	EXTERIOR WALL- ALUMINUM COMPOSITE METAL PANEL WITH 1" XPS INSULATION + (2) LAYERS OF 5/8" DENSE-GLASS GOLD ON EXTERIOR SIDE AND (1) LAYER OF 5/8" GYP. BD. ON INTERIOR SIDE OF 6" METAL STUDS, 16 GA. @ 16" O.C. W/4" BATT INSULATION TO UNDERSIDE OF CONCRETE SLAB
	CAST IN PLACE CONCRETE WALL
	CONCRETE MASONRY WALL
8	3 HOUR FIRE RATED 8" CMU PARTITION AT TRASH CHUTE
0	2 HOUR FIRE RATED PARTITION: MASONRY EQUIVALENT (1) LAYER OF 5/8" THK IMPACT RESISTANCE GYP. BD. AND (1) LAYER OF 5/8" THK GYP. BD ON BOTH SIDES OF 3 5/8" MTL STUD, 20 GA MIN. @ 16" O.C. W/ 4" BATT INSULATION TO UNDERSIDE OF CONCRETE SLAB
1	2 HOUR FIRE RATED PARTITION: (2) LAYER OF 5/8" THK TYPE 'X" GYP. BD. ON BOTH SIDES OF 3 5/8" MTL STUD @16" O.C. W/ 4" BATT INSULATION TO UNDERSIDE OF CONCRETE SLAB
2	2 HOUR FIRE RATED SHAFT WALL: (1) LAYER OF 5/8" THK TYPE 'X" GYP. BD. ON BOTH SIDES OF 2 1/2" MTL I STUDS W/ 1"X24" TYPE X GYPSUM PANEL INSERTED BETWEEN 2 1/2" FLOOR AND CEILING TRACK
3	2 HOUR FIRE RATED PARTITION: (2) LAYER OF 5/8" THK TYPE 'X" GYP. BD. ON INTERIOR SIDE OF 2 1/2" METAL STUDS @16" O.C. TO UNDERSIDE OF CONCRETE SLAB
4	1 HOUR FIRE RATED PARTITION: (1) LAYER OF 5/8" THK TYPE 'X" GYP. BD. ON BOTH SIDES OF 3 5/8" MTL STUD @16" O.C. W/ 4" BATT INSULATION TO UNDERSIDE OF CONCRETE SLAB
5	INTERIOR FURRING PARTITION: (1) LAYER OF 5/8" THK TYPE 'X" GYP. BD. ON INTERIOR SIDES OF 2 1/2" MTL STUD @16" O.C. W/ 2" BATT INSULATION TO UNDERSIDE OF CONCRETE SLAB
6	INTERIOR FURRING PARTITION: (1) LAYER OF 5/8" THK TYPE 'X" GYP. BD. ON INTERIOR SIDES OF 7/8" MTL FURRING STRIP @16" O.C. TO UNDERSIDE OF CONCRETE SLAB
7	INTERIOR KNEE WALL PARTITION: (1) LAYER OF 5/8" THK TYPE 'X" GYP. BD. ON BOTH SIDES OF 3 5/8" MTL STUDS @16" O.C. TO UNDERSIDE OF COUNTER TOP
11	INTERIOR CHASE WALL PARTITION: (1) LAYER OF 5/8" THK TYPE 'X" GYP. BD. ON 1 5/8" METAL STUDS @16" O.C. TO UNDERSIDE OF CONCRETE SLAB ON BOTH SIDES OF 4" CHASE SPACE

ARCHITECT:
MORALI ARCHITECT
505 8th AVENUE, SUITE 2202, NEW YORK, NY, 10018
TEL. 212 219 2091 E-MAIL: MSTUDIONY@AOL.COM

ENGINEERING GROUP ASSOCIATES, PC
19 W 21ST STREET RM 1103 NY, NY, 10010 TEL: 212 982 1410

IMA ENGINEERING , PC
123-23 82 AVENUE, KEW GARDENS, NY, 11415 TEL: 718 268 8600

ADVANCED CLEANUP TECHNOLOGIES, INC.
110 MAIN STREET, SUITE 103, PORT WASHINGTON, NY, 11050

COPYRIGHT (C)
THESE PLAN ARE AN INSTRUMENT OF SERVICE AND ARE THE PROPERTY OF THE ARCHITECT.
This and all documents produced by this firm under this agreement shall remain the sole property of this firm and may not be used, copied, changed or distributed by the client or others without the written consent of this firm.
INFRINGEMENTS WILL BE PROSECUTED.

CONTRACTOR SHALL VERIFY ALL CONDITIONS AND MEASUREMENTS IN THE FIELD AND BE RESPONSIBLE FOR FIELD FIT AND QUANTITY OF WORK. NO ALLOWANCES SHALL BE MADE IN BEHALF OF THE CONTRACTOR FOR ANY ERROR OR NEGLECT ON HIS PART.

"THIS PLAN IS APPROVED ONLY FOR WORK INDICATED ON THE APPLICATION SPECIFICATION SHEET. ALL OTHER MATTERS SHOWN ARE NOT TO BE RELIED UPON, OR TO BE CONSIDERED AS EITHER BEING APPROVED OR IN ACCORDANCE WITH APPLICABLE CODES."

No.	Description	Date

PROJECT
36-33 31ST STREET
LONG ISLAND CITY, NY
11106

SIXTH FLOOR PLAN

SCALE : AS NOTED

SEAL:

Date	09.17.15
Project Number	1507
Drawn By	CI
Checked By	AM

A-106.00

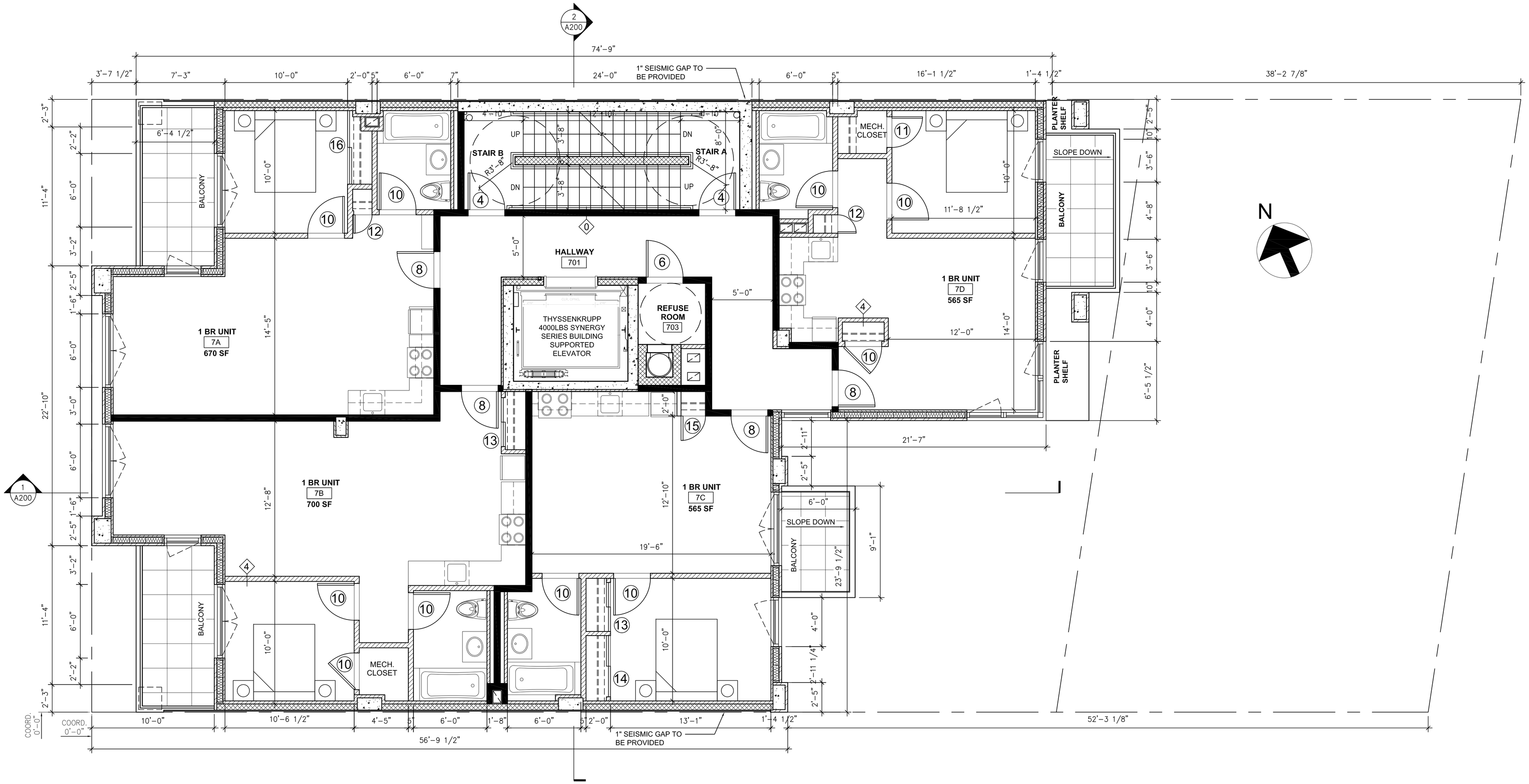

SEVENTH FLOOR PLAN
SCALE: 1/4" = 1'-0"

WALL TYPE LEGEND

	EXISTING MASONRY WALL TO REMAIN
	EXTERIOR WALL- ALUMINUM COMPOSITE METAL PANEL WITH 1" XPS INSULATION + (2) LAYERS OF 5/8" DENSE-GLASS GOLD ON EXTERIOR SIDE AND (1) LAYER OF 5/8" GYP. BD. ON INTERIOR SIDE OF 6" METAL STUDS, 16 GA. @ 16" O.C. W/4" BATT INSULATION TO UNDERSIDE OF CONCRETE SLAB
	CAST IN PLACE CONCRETE WALL
	CONCRETE MASONRY WALL
8	3 HOUR FIRE RATED 8" CMU PARTITION AT TRASH CHUTE
0	2 HOUR FIRE RATED PARTITION: MASONRY EQUIVALENT (1) LAYER OF 5/8" THK IMPACT RESISTANCE GYP. BD. AND (1) LAYER OF 5/8" THK GYP. BD ON BOTH SIDES OF 3 5/8" MTL STUD, 20 GA MIN. @ 16" O.C. W/ 4" BATT INSULATION TO UNDERSIDE OF CONCRETE SLAB
1	2 HOUR FIRE RATED PARTITION: (2) LAYER OF 5/8" THK TYPE 'X" GYP. BD. ON BOTH SIDES OF 3 5/8" MTL STUD @16" O.C. W/ 4" BATT INSULATION TO UNDERSIDE OF CONCRETE SLAB
2	2 HOUR FIRE RATED SHAFT WALL: (1) LAYER OF 5/8" THK TYPE 'X" GYP. BD. ON BOTH SIDES OF 2 1/2" MTL I STUDS W/ 1"X24" TYPE X GYPSUM PANEL INSERTED BETWEEN 2 1/2" FLOOR AND CEILING TRACK
3	2 HOUR FIRE RATED PARTITION: (2) LAYER OF 5/8" THK TYPE 'X" GYP. BD. ON INTERIOR SIDE OF 2 1/2" METAL STUDS @16" O.C. TO UNDERSIDE OF CONCRETE SLAB
4	1 HOUR FIRE RATED PARTITION: (1) LAYER OF 5/8" THK TYPE 'X" GYP. BD. ON BOTH SIDES OF 3 5/8" MTL STUD @16" O.C. W/ 4" BATT INSULATION TO UNDERSIDE OF CONCRETE SLAB
5	INTERIOR FURRING PARTITION: (1) LAYER OF 5/8" THK TYPE 'X" GYP. BD. ON INTERIOR SIDES OF 2 1/2" MTL STUD @16" O.C. W/ 2" BATT INSULATION TO UNDERSIDE OF CONCRETE SLAB
6	INTERIOR FURRING PARTITION: (1) LAYER OF 5/8" THK TYPE 'X" GYP. BD. ON INTERIOR SIDES OF 7/8" MTL FURRING STRIP @16" O.C. TO UNDERSIDE OF CONCRETE SLAB
7	INTERIOR KNEE WALL PARTITION: (1) LAYER OF 5/8" THK TYPE 'X" GYP. BD. ON BOTH SIDES OF 3 5/8" MTL STUDS @16" O.C. TO UNDERSIDE OF COUNTER TOP
11	INTERIOR CHASE WALL PARTITION: (1) LAYER OF 5/8" THK TYPE 'X" GYP. BD. ON 1 5/8" METAL STUDS @16" O.C. TO UNDERSIDE OF CONCRETE SLAB ON BOTH SIDES OF 4" CHASE SPACE

ARCHITECT:
MORALI ARCHITECT
505 8th AVENUE, SUITE 2202, NEW YORK, NY, 10018
TEL. 212 219 2091 E-MAIL: MSTUDIONY@AOL.COM

ENGINEERING GROUP ASSOCIATES, PC
19 W 21ST STREET RM 1103 NY, NY, 10010 TEL: 212 982 1410

IMA ENGINEERING , PC
123-23 82 AVENUE, KEW GARDENS, NY, 11415 TEL: 718 268 8600

ADVANCED CLEANUP TECHNOLOGIES, INC.
110 MAIN STREET, SUITE 103, PORT WASHINGTON, NY, 11050

COPYRIGHT (C)
THESE PLAN ARE AN INSTRUMENT OF SERVICE AND ARE THE PROPERTY OF THE ARCHITECT.
This and all documents produced by this firm under this agreement shall remain the sole property of this firm and may not be used, copied, changed or distributed by the client or others without the written consent of this firm.
INFRINGEMENTS WILL BE PROSECUTED.

CONTRACTOR SHALL VERIFY ALL CONDITIONS AND MEASUREMENTS IN THE FIELD AND BE RESPONSIBLE FOR FIELD FIT AND QUANTITY OF WORK. NO ALLOWANCES SHALL BE MADE IN BEHALF OF THE CONTRACTOR FOR ANY ERROR OR NEGLECT ON HIS PART.

"THIS PLAN IS APPROVED ONLY FOR WORK INDICATED ON THE APPLICATION SPECIFICATION SHEET. ALL OTHER MATTERS SHOWN ARE NOT TO BE RELIED UPON, OR TO BE CONSIDERED AS EITHER BEING APPROVED OR IN ACCORDANCE WITH APPLICABLE CODES."

No.	Description	Date

PROJECT
36-33 31ST STREET
LONG ISLAND CITY, NY
11106

SEVENTH FLOOR PLAN

SCALE : AS NOTED

SEAL:

Date	09.17.15
Project Number	1507
Drawn By	CI
Checked By	AM

A-107.00

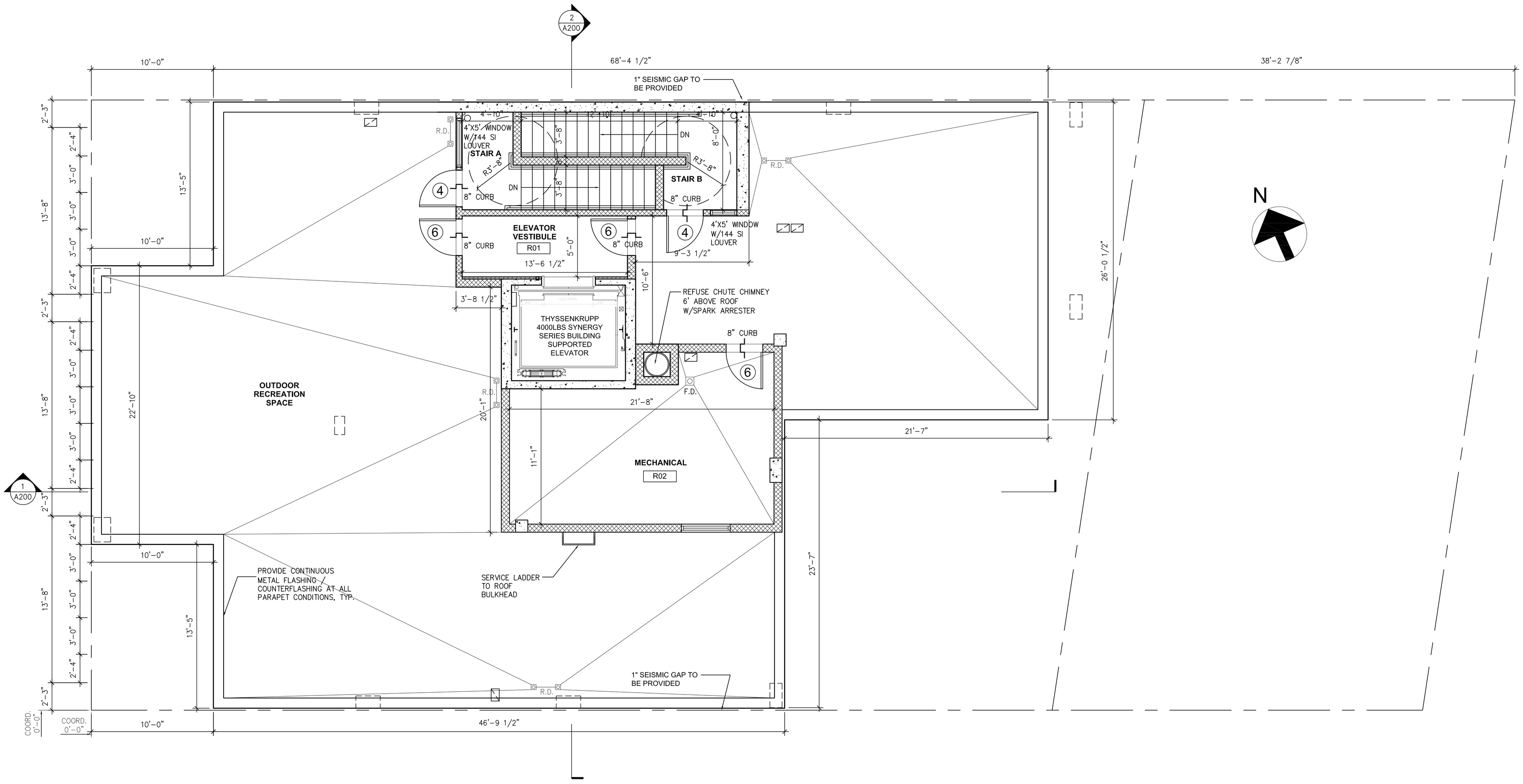

ROOF FLOOR PLAN
SCALE: 1/4" = 1'-0"

WALL TYPE LEGEND

	EXISTING MASONRY WALL TO REMAIN
	EXTERIOR WALL- ALUMINUM COMPOSITE METAL PANEL WITH 1" XPS INSULATION + (2) LAYERS OF 5/8" DENSE-GLASS GOLD ON EXTERIOR SIDE AND (1) LAYER OF 5/8" GYP. BD. ON INTERIOR SIDE OF 6" METAL STUDS, 16 GA. @ 16" O.C. W/4" BATT INSULATION TO UNDERSIDE OF CONCRETE SLAB
	CAST IN PLACE CONCRETE WALL
	CONCRETE MASONRY WALL
8	3 HOUR FIRE RATED 8" CMU PARTITION AT TRASH CHUTE
0	2 HOUR FIRE RATED PARTITION: MASONRY EQUIVALENT (1) LAYER OF 5/8" THK IMPACT RESISTANCE GYP. BD. AND (1) LAYER OF 5/8" THK GYP. BD ON BOTH SIDES OF 3 5/8" MTL STUD, 20 GA MIN. @ 16" O.C. W/ 4" BATT INSULATION TO UNDERSIDE OF CONCRETE SLAB
1	2 HOUR FIRE RATED PARTITION: (2) LAYER OF 5/8" THK TYPE "X" GYP. BD. ON BOTH SIDES OF 3 5/8" MTL STUD @16" O.C. W/ 4" BATT INSULATION TO UNDERSIDE OF CONCRETE SLAB
2	2 HOUR FIRE RATED SHAFT WALL: (1) LAYER OF 5/8" THK TYPE "X" GYP. BD. ON BOTH SIDES OF 2 1/2" MTL I STUDS W/ 1"X24" TYPE X GYPSUM PANEL INSERTED BETWEEN 2 1/2" FLOOR AND CEILING TRACK
3	2 HOUR FIRE RATED PARTITION: (2) LAYER OF 5/8" THK TYPE "X" GYP. BD. ON INTERIOR SIDE OF 2 1/2" METAL STUDS @16" O.C. TO UNDERSIDE OF CONCRETE SLAB
4	1 HOUR FIRE RATED PARTITION: (1) LAYER OF 5/8" THK TYPE "X" GYP. BD. ON BOTH SIDES OF 3 5/8" MTL STUD @16" O.C. W/ 4" BATT INSULATION TO UNDERSIDE OF CONCRETE SLAB
5	INTERIOR FURRING PARTITION: (1) LAYER OF 5/8" THK TYPE "X" GYP. BD. ON INTERIOR SIDES OF 2 1/2" MTL STUD @16" O.C. W/ 2" BATT INSULATION TO UNDERSIDE OF CONCRETE SLAB
6	INTERIOR FURRING PARTITION: (1) LAYER OF 5/8" THK TYPE "X" GYP. BD. ON INTERIOR SIDES OF 7/8" MTL FURRING STRIP @16" O.C. TO UNDERSIDE OF CONCRETE SLAB
7	INTERIOR KNEE WALL PARTITION: (1) LAYER OF 5/8" THK TYPE "X" GYP. BD. ON BOTH SIDES OF 3 5/8" MTL STUDS @16" O.C. TO UNDERSIDE OF COUNTER TOP
11	INTERIOR CHASE WALL PARTITION: (1) LAYER OF 5/8" THK TYPE "X" GYP. BD. ON 1 5/8" METAL STUDS @16" O.C. TO UNDERSIDE OF CONCRETE SLAB ON BOTH SIDES OF 4" CHASE SPACE

ARCHITECT:
MORALI ARCHITECT
505 8th AVENUE, SUITE 2202, NEW YORK, NY, 10018
TEL. 212 219 2091 E-MAIL: MSTUDIONY@AOL.COM

ENGINEERING GROUP ASSOCIATES, PC
19 W 21ST STREET RM 1103 NY, NY, 10010 TEL: 212 982 1410

IMA ENGINEERING , PC
123-23 82 AVENUE, KEW GARDENS, NY, 11415 TEL: 718 268 8600

ADVANCED CLEANUP TECHNOLOGIES, INC.
110 MAIN STREET, SUITE 103, PORT WASHINGTON, NY, 11050

COPYRIGHT (C)
THESE PLAN ARE AN INSTRUMENT OF SERVICE AND ARE THE PROPERTY OF THE ARCHITECT.
This and all documents produced by this firm under this agreement shall remain the sole property of this firm and may not be used, copied, changed or distributed by the client or others without the written consent of this firm.
INFRINGEMENTS WILL BE PROSECUTED.

CONTRACTOR SHALL VERIFY ALL CONDITIONS AND MEASUREMENTS IN THE FIELD AND BE RESPONSIBLE FOR FIELD FIT AND QUANTITY OF WORK. NO ALLOWANCES SHALL BE MADE IN BEHALF OF THE CONTRACTOR FOR ANY ERROR OR NEGLECT ON HIS PART.

"THIS PLAN IS APPROVED ONLY FOR WORK INDICATED ON THE APPLICATION SPECIFICATION SHEET. ALL OTHER MATTERS SHOWN ARE NOT TO BE RELIED UPON, OR TO BE CONSIDERED AS EITHER BEING APPROVED OR IN ACCORDANCE WITH APPLICABLE CODES."

No.	Description	Date

PROJECT
36-33 31ST STREET
LONG ISLAND CITY, NY
11106

ROOF FLOOR PLAN

SCALE : AS NOTED

SEAL:

Date	09.17.15
Project Number	1507
Drawn By	CI
Checked By	AM

A-108.00

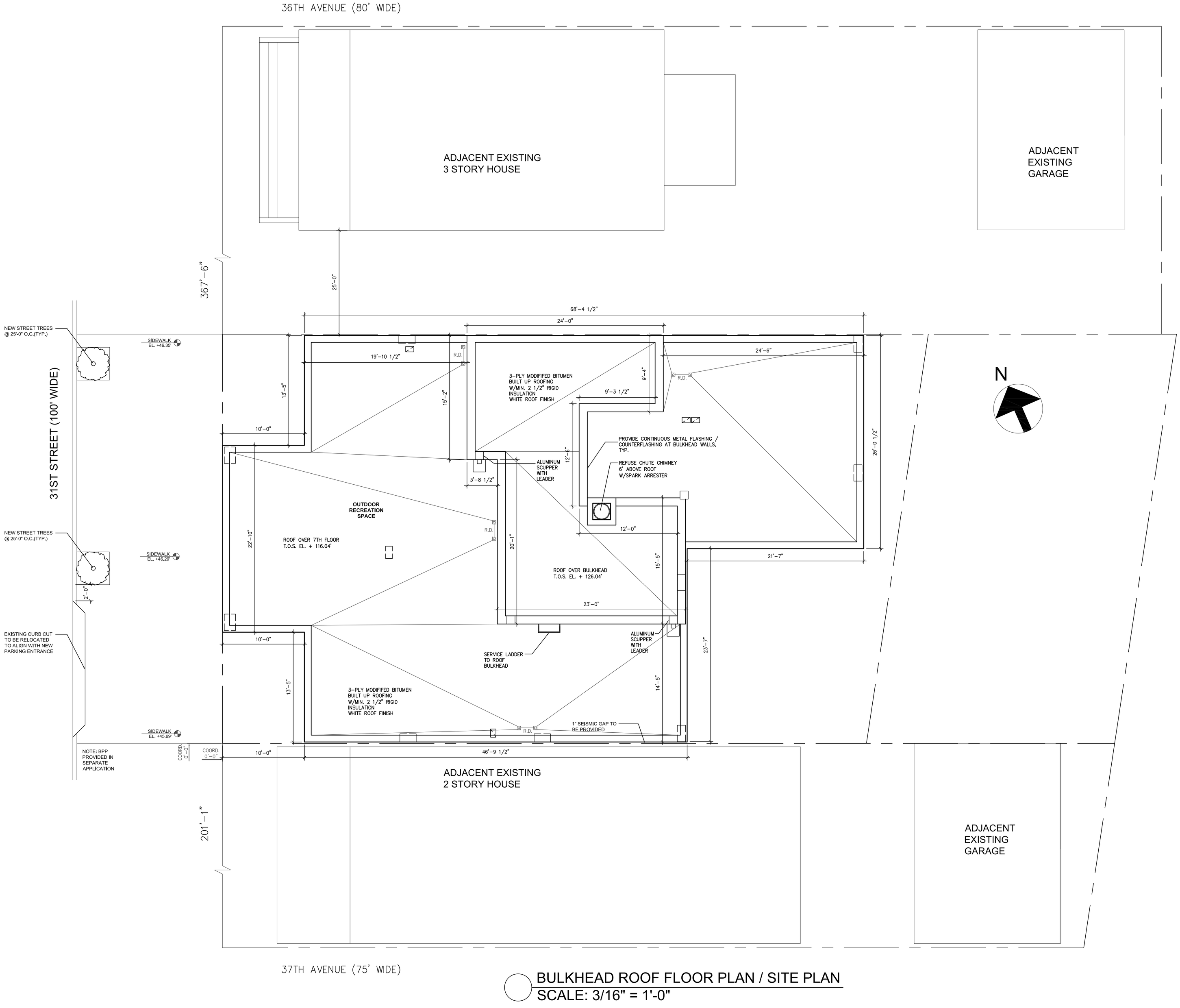

BULKHEAD ROOF FLOOR PLAN / SITE PLAN
SCALE: 3/16" = 1'-0"

ARCHITECT:
MORALI ARCHITECT
505 8th AVENUE, SUITE 2202, NEW YORK, NY, 10018
TEL. 212 219 2091 E-MAIL: MSTUDIONY@AOL.COM

ENGINEERING GROUP ASSOCIATES, PC
19 W 21ST STREET RM 1103 NY, NY, 10010 TEL: 212 982 1410

IMA ENGINEERING , PC
123-23 82 AVENUE, KEW GARDENS, NY, 11415 TEL: 718 268 8600

ADVANCED CLEANUP TECHNOLOGIES, INC.
110 MAIN STREET, SUITE 103, PORT WASHINGTON, NY, 11050

COPYRIGHT (C)
THESE PLAN ARE AN INSTRUMENT OF SERVICE AND ARE THE PROPERTY OF THE ARCHITECT.
This and all documents produced by this firm under this agreement shall remain the sole property of this firm and may not be used, copied, changed or distributed by the client or others without the written consent of this firm.
INFRINGEMENTS WILL BE PROSECUTED.

CONTRACTOR SHALL VERIFY ALL CONDITIONS AND MEASUREMENTS IN THE FIELD AND BE RESPONSIBLE FOR FIELD FIT AND QUANTITY OF WORK. NO ALLOWANCES SHALL BE MADE IN BEHALF OF THE CONTRACTOR FOR ANY ERROR OR NEGLECT ON HIS PART.

"THIS PLAN IS APPROVED ONLY FOR WORK INDICATED ON THE APPLICATION SPECIFICATION SHEET. ALL OTHER MATTERS SHOWN ARE NOT TO BE RELIED UPON, OR TO BE CONSIDERED AS EITHER BEING APPROVED OR IN ACCORDANCE WITH APPLICABLE CODES."

No.	Description	Date

PROJECT
36-33 31ST STREET
LONG ISLAND CITY, NY
11106

ROOF FLOOR PLAN

SCALE : AS NOTED

SEAL:

Date	09.17.15
Project Number	1507
Drawn By	CI
Checked By	AM

A-109.00

REFUSE CHUTE TO EXTEND 6'-0" ABOVE ROOF TOP OF CHUTE TO BE EQUIPPED WITH A SPARK ARRESTER

6'-0"

3 COAT STUCCO BY DRYVIT SILVER COLOR ON 1" INSULATION RIGID BOARD ON WATERPROOF MEMBRANE WRAP BY GRACE OR EQUAL

0.050 ALUMINUM PAC-TITE TAPERED COPING CAP BY PAC-CLAD OR APPROVED EQUAL - COLOR TBD

¾" STRUCTURAL GLASS RAILING, TYP.

5mm ALUM COMPOSITE METAL PANEL WITH OFFSET SLIDING CLIP & 1" XPS INSULATION R-5: REYNOBOND R160FR BY OCBE OR EQUAL, LIGHT GREY COLOR, TYP. CONTRACTOR TO PROVIDE COLOR SAMPLES FOR ARCHITECT'S APPROVAL

TRIMVENT SELECT S13 2000 TS1132050 SURFACE MOUNTED VINYL SLOT VENTILATOR BY TITON OR EQUAL, TYP.

5mm ALUM COMPOSITE METAL PANEL WITH OFFSET SLIDING CLIP & 1" XPS INSULATION R-5: REYNOBOND R160FR BY OCBE OR EQUAL, DARK GREY COLOR, TYP. CONTRACTOR TO PROVIDE COLOR SAMPLES FOR ARCHITECT'S APPROVAL

1X6 TIGERWOOD SIDING BY ADVANTAGE SHIPLAP SIDING OR EQUAL, TYP.

EXTERIOR LIGHT SCONCES, TYP.

OPEN ALLEY

PROPERTY LINE

PROPERTY LINE

BACK (SOUTHEAST) ELEVATION
SCALE: 3/16" = 1'-0"

REFUSE CHUTE TO EXTEND 6'-0" ABOVE ROOF TOP OF CHUTE TO BE EQUIPPED WITH A SPARK ARRESTER

6'-0"

3 COAT STUCCO BY DRYVIT SILVER COLOR ON 1" INSULATION RIGID BOARD ON WATERPROOF MEMBRANE WRAP BY GRACE OR EQUAL

36-33 31st

INSULATED RIBBED STEEL GARAGE DOOR MODEL 520 S BY CLOPAY OR APPROVED EQUAL

PROPERTY LINE

PROPERTY LINE

FRONT (NORTHWEST) ELEVATION
SCALE: 3/16" = 1'-0"

BULKHEAD EL. +127.04'

4'-2"

ROOF EL. +116.04'

9'-0"

7TH FL EL. +106.37'

9'-0"

6TH FL EL. +96.70'

9'-0"

PROVIDE CONTINUOUS METAL FLASHING/COUNTER FLASHING BETWEEN NEW BUILDING & EXISTING ROOF PARAPET OF ADJACENT BUILDING & PROVIDE ROOF PROTECTION DURING CONSTRUCTION

5TH FL EL. +87.03'

9'-0"

70'-0"

4TH FL EL. +77.36'

9'-0"

3RD FL EL. +67.69'

9'-0"

2ND FL EL. +58.02'

11'-4"

1ST FL A.L.G. EL. +46.02'

9'-0"

CELLAR EL. +36.35'

ARCHITECT:
MORALI ARCHITECTURE
505 8th AVENUE, SUITE 2202, NEW YORK, NY, 10018
TEL. 212 219 2091 E-MAIL: jmorali@moraliarchitecture.com

IMA ENGINEERING, PC
123-23 82 AVENUE, KEW GARDENS, NY, 11415 TEL: 718 268 8600

ADVANCED CLEANUP TECHNOLOGIES, INC.
110 MAIN STREET, SUITE 103, PORT WASHINGTON, NY, 11050

COPYRIGHT (C)
THESE PLAN ARE AN INSTRUMENT OF SERVICE AND ARE THE PROPERTY OF THE ARCHITECT.
This and all documents produced by this firm under this agreement shall remain the sole property of this firm and may not be used, copied, changed or distributed by the client or others without the written consent of this firm.
INFRINGEMENTS WILL BE PROSECUTED.

CONTRACTOR SHALL VERIFY ALL CONDITIONS AND MEASUREMENTS IN THE FIELD AND BE RESPONSIBLE FOR FIELD FIT AND QUANTITY OF WORK. NO ALLOWANCES SHALL BE MADE IN BEHALF OF THE CONTRACTOR FOR ANY ERROR OR NEGLECT ON HIS PART.

"THIS PLAN IS APPROVED ONLY FOR WORK INDICATED ON THE APPLICATION SPECIFICATION SHEET. ALL OTHER MATTERS SHOWN ARE NOT TO BE RELIED UPON, OR TO BE CONSIDERED AS EITHER BEING APPROVED OR IN ACCORDANCE WITH APPLICABLE CODES."

No.	Description	Date

PROJECT
36-37 31ST STREET
LONG ISLAND CITY, NY
11106

FRONT & BACK ELEVATIONS (NORTHWEST & SOUTHEAST)

SCALE : AS NOTED

SEAL:

Date	10.12.15
Project Number	1507
Drawn By	CI
Checked By	AM

A-300.00

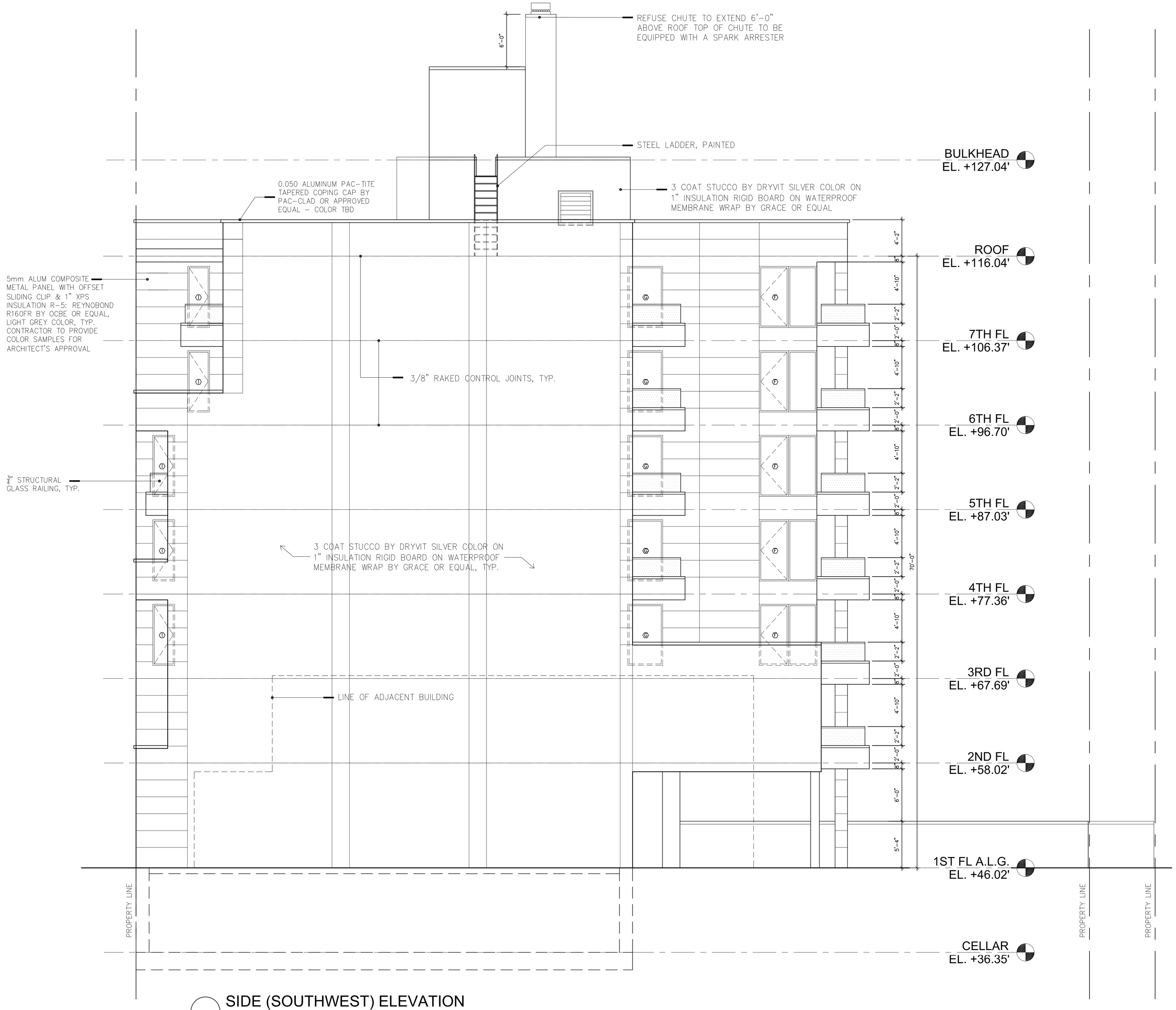

SIDE (SOUTHWEST) ELEVATION
SCALE: 3/16" = 1'-0"

ARCHITECT:
MORALI ARCHITECTURE
505 8th AVENUE, SUITE 2202, NEW YORK, NY, 10018
TEL. 212 219 2091 E-MAIL: jmorali@moralliarchitecture.com

IMA ENGINEERING, PC
123-23 82 AVENUE, KEW GARDENS, NY, 11415 TEL: 718 268 8600

ADVANCED CLEANUP TECHNOLOGIES, INC.
110 MAIN STREET, SUITE 103, PORT WASHINGTON, NY, 11050

COPYRIGHT (C)
THESE PLAN ARE AN INSTRUMENT OF SERVICE AND ARE THE PROPERTY OF THE ARCHITECT.
This and all documents produced by this firm under this agreement shall remain the sole property of this firm and may not be used, copied, changed or distributed by the client or others without the written consent of this firm.
INFRINGEMENTS WILL BE PROSECUTED.

CONTRACTOR SHALL VERIFY ALL CONDITIONS AND MEASUREMENTS IN THE FIELD AND BE RESPONSIBLE FOR FIELD FIT AND QUANTITY OF WORK. NO ALLOWANCES SHALL BE MADE IN BEHALF OF THE CONTRACTOR FOR ANY ERROR OR NEGLECT ON HIS PART.

"THIS PLAN IS APPROVED ONLY FOR WORK INDICATED ON THE APPLICATION SPECIFICATION SHEET. ALL OTHER MATTERS SHOWN ARE NOT TO BE RELIED UPON, OR TO BE CONSIDERED AS EITHER BEING APPROVED OR IN ACCORDANCE WITH APPLICABLE CODES."

No.	Description	Date

PROJECT
36-37 31ST STREET
LONG ISLAND CITY, NY
11106

SIDE ELEVATION
(SOUTHWEST)

SCALE : AS NOTED

SEAL:

Date	10.12.15
Project Number	1507
Drawn By	CI
Checked By	AM

A-301.00

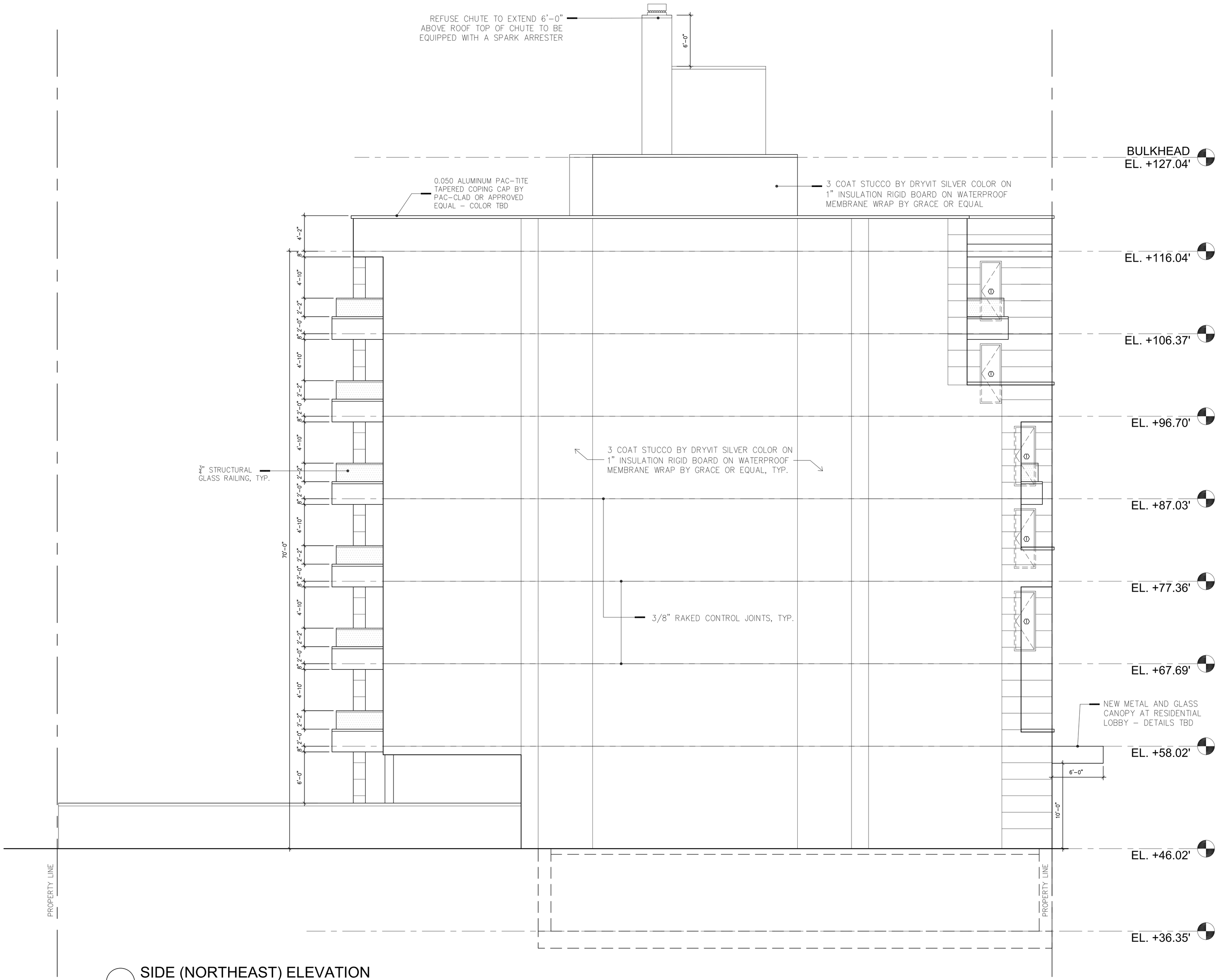

SIDE (NORTHEAST) ELEVATION
SCALE: 3/16" = 1'-0"

ARCHITECT:
MORALI ARCHITECTURE
505 8th AVENUE, SUITE 2202, NEW YORK, NY, 10018
TEL. 212 219 2091 E-MAIL: jmorali@moraliarchitecture.com

IMA ENGINEERING, PC
123-23 82 AVENUE, KEW GARDENS, NY, 11415 TEL: 718 268 8600

ADVANCED CLEANUP TECHNOLOGIES, INC.
110 MAIN STREET, SUITE 103, PORT WASHINGTON, NY, 11050

COPYRIGHT (C)
THESE PLAN ARE AN INSTRUMENT OF SERVICE AND ARE THE PROPERTY OF THE ARCHITECT,
This and all documents produced by this firm under this agreement shall remain the sole property of this firm and may not be used, copied, changed or distributed by the client or others without the written consent of this firm,
INFRINGEMENTS WILL BE PROSECUTED.

CONTRACTOR SHALL VERIFY ALL CONDITIONS AND MEASUREMENTS IN THE FIELD AND BE RESPONSIBLE FOR FIELD FIT AND QUANTITY OF WORK. NO ALLOWANCES SHALL BE MADE IN BEHALF OF THE CONTRACTOR FOR ANY ERROR OR NEGLECT ON HIS PART.

"THIS PLAN IS APPROVED ONLY FOR WORK INDICATED ON THE APPLICATION SPECIFICATION SHEET, ALL OTHER MATTERS SHOWN ARE NOT TO BE RELIED UPON, OR TO BE CONSIDERED AS EITHER BEING APPROVED OR IN ACCORDANCE WITH APPLICABLE CODES."

No.	Description	Date

PROJECT
36-37 31ST STREET
LONG ISLAND CITY, NY
11106

SIDE ELEVATION
(NORTHEAST)

SCALE : AS NOTED

SEAL:

Date	10.12.15
Project Number	1507
Drawn By	CI
Checked By	AM

A-302.00

APPENDIX 2

CITIZEN PARTICIPATION PLAN

The NYC Office of Environmental Remediation and Zoitco LLC have established this Citizen Participation Plan because the opportunity for citizen participation is an important component of the NYC Voluntary Cleanup Program. This Citizen Participation Plan describes how information about the project will be disseminated to the Community during the remedial process. As part of its obligations under the NYC VCP, Zoitco LLC will maintain a repository for project documents and provide public notice at specified times throughout the remedial program. This Plan also takes into account potential environmental justice concerns in the community that surrounds the project Site. Under this Citizen Participation Plan, project documents and work plans are made available to the public in a timely manner. Public comment on work plans is strongly encouraged during public comment periods. Work plans are not approved by the NYC Office of Environmental Remediation (OER) until public comment periods have expired and all comments are formally reviewed. An explanation of cleanup plans in the form of a public meeting or informational session is available upon request to OER's project manager assigned to this Site, Katherine Glass, who can be contacted about these issues or any others questions, comments or concerns that arise during the remedial process at (212) 788-8841.

Project Contact List: OER has established a Site Contact List for this project to provide public notices in the form of fact sheets to interested members of the Community. Communications will include updates on important information relating to the progress of the cleanup program at the Site as well as to request public comments on the cleanup plan. The Project Contact List includes owners and occupants of adjacent buildings and homes, principal administrators of nearby schools, hospitals and day care centers, the public water supplier that serves the area, established document repositories, the representative Community Board, City Council members, other elected representatives and any local Brownfield Opportunity Area (BOA) grantee organizations. Any member of the public or organization will be added to the

Site Contact List on request. A copy of the Site Contact List is maintained by OER's project manager. If you would like to be added to the Project Contact List, contact NYC OER at (212) 788-8841 or by email at brownfields@cityhall.nyc.gov.

Repositories: A document repository is maintained online. Internet access to view OER's document repositories is available at public libraries. This document repository is intended to house, for community review, all principal documents generated during the cleanup program including Remedial Investigation plans and reports, Remedial Action work plans and reports, and all public notices and fact sheets produced during the lifetime of the remedial project. The library nearest the Site is:

Queens Library at Broadway
4020 Broadway
Long Island City, NY 11103
(718) 721-2462

Monday: 9:00 AM – 8:00 PM
Tuesday: 1:00 – 6:00 PM
Wednesday: 10:00 AM – 6:00 PM
Thursday: 12:00 – 8:00 PM
Friday: 10:00 AM – 6:00 PM
Saturday: 10:00 AM – 5:00 PM
Sunday: Closed

Digital Documentation: NYC OER requires the use of digital documents in our repository as a means of minimizing paper use while also increasing convenience in access and ease of use.

Issues of Public Concern: Zoitco LLC is required to identify whether there are specific issues of concern to stakeholders proximate to the project site. Such issues include but are not limited to interests of Environmental Justice communities.

Public Notice and Public Comment: Public notice to all members of the Project Contact List is required at three major steps during the performance of the cleanup program (listed

below) and at other points that may be required by OER. Notices will include Fact Sheets with descriptive project summaries, updates on recent and upcoming project activities, repository information, and important phone and email contact information. All notices will be reviewed and approved by OER prior to distribution and mailed by the Enrollee. Public comment is solicited in public notices for all work plans developed under the NYC Voluntary Cleanup Program. Final review of all work plans by OER will consider all public comments. Approval will not be granted until the public comment period has been completed.

Citizen Participation Milestones: Public notice and public comment activities occur at several steps during a typical NYC VCP project. These steps include:

- **Public Notice of the availability of the Remedial Investigation Report and Remedial Action Work Plan and a 30-day public comment period on the Remedial Action Work Plan:** Public notice in the form of a Fact Sheet is sent to all parties listed on the Site Contact List announcing the availability of the Remedial Investigation Report and Remedial Action Work Plan and the initiation of a 30-day public comment period on the Remedial Action Work Plan. The Fact Sheet summarizes the findings of the RIR and provides details of the RAWP. The public comment period will be extended an additional 15 days upon public request. A public meeting or informational session will be conducted by OER upon request.
- **Public Notice announcing the approval of the RAWP and the start of remediation:** Public notice in the form of a Fact Sheet is sent to all parties listed on the Site Contact List announcing the approval of the RAWP and the start of remediation.
- **Public Notice announcing the completion of remediation, designation of Institutional and Engineering Controls and issuance of the Notice of Completion:** Public notice in the form of a Fact Sheet is sent to all parties listed on the Site Contact List announcing the completion of remediation, providing a list of all Institutional and Engineering Controls implemented for to the Site and announcing the issuance of the Notice of Completion.

APPENDIX 3

SUSTAINABILITY STATEMENT

This Sustainability Statement documents sustainable activities and green remediation efforts planned under this remedial action.

Reuse of Clean, Recyclable Materials and Reduced Consumption of Non-Renewable Resources: Reuse of clean, locally-derived recyclable materials reduces consumption of non-renewable virgin resources and can provide energy savings and greenhouse gas reduction. An estimate of the quantity (in tons) of clean, non-virgin materials (reported by type of material) reused under this plan will be quantified and reported in the RAR.

Reduced Energy Consumption and Promotion of Greater Energy Efficiency: Reduced energy consumption lowers greenhouse gas emissions, improves local air quality, lessens in-city power generation requirements, can lower traffic congestion, and provides substantial cost savings. Best efforts will be made to quantify energy efficiencies achieved during the remediation and will be reported in the Remedial Action Report (RAR). Where energy savings cannot be easily quantified, a gross indicator of the amount of energy saved or the means by which energy savings was achieved will be reported.

Conversion to Clean Fuels: Use of clean fuel improves NYC's air quality by reducing harmful emissions. Natural gas will be utilized for fuel in the new building. An estimate of the volume of clean fuels used during remedial activities will be quantified and reported in the RAR.

Recontamination Control: Recontamination after cleanup and redevelopment is completed undermines the value of work performed, may result in a property that is less protective of public health or the environment, and may necessitate additional cleanup work later or impede future redevelopment. Recontamination can arise from future releases that occur within the property or by influx of contamination from off-Site. An estimate of the area of the

Site that utilizes recontamination controls under this plan will be reported in the RAR in square feet.

Stormwater Retention: Stormwater retention improves water quality by lowering the rate of combined stormwater and sewer discharges to NYC's sewage treatment plants during periods of precipitation, and reduces the volume of untreated influent to local surface waters. An estimate of the enhanced stormwater retention capability of the redevelopment project will be included in the RAR.

Linkage with Green Building: Green buildings provide a multitude of benefits to the city across a broad range of areas, such as reduction of energy consumption, conservation of resources, and reduction in toxic materials use. The Green Buildings that are associated with this brownfield redevelopment property will be reported in the RAR. The total square footage of green building space created as a function of this brownfield redevelopment will be quantified for residential, commercial and industrial/manufacturing uses.

Paperless Voluntary Cleanup Program: Zoitco LLC is participating in OER's Paperless Voluntary Cleanup Program. Under this program, submission of electronic documents will replace submission of hard copies for the review of project documents, communications and milestone reports.

Low-Energy Project Management Program: Zoitco LLC is participating in OER's low-energy project management program. Under this program, whenever possible, meetings are held using remote communication technologies, such as videoconferencing and teleconferencing to reduce energy consumption and traffic congestion associated with personal transportation.

Trees and Plantings: Trees and other plantings provide habitat and add to NYC's environmental quality in a wide variety of ways. Native plant species and native habitat provide optimal support to local fauna, promote local biodiversity, and require less maintenance. An

estimate of the land area that will be vegetated, including the number of trees planted or preserved, will be reported in square feet in the RAR.

APPENDIX 4

SOIL/MATERIALS MANAGEMENT PLAN

1.1 Soil Screening Methods

Visual, olfactory and PID soil screening and assessment will be performed under the supervision of a Qualified Environmental Professional and will be reported in the final remedial report. Soil screening will be performed during invasive work performed during the remedy and development phases prior to issuance of final signoff by OER.

1.2 Stockpile Methods

Excavated soil from suspected areas of contamination (e.g., hot spots, USTs, drains, etc.) will be stockpiled separately and will be segregated from clean soil and construction materials. Stockpiles will be used only when necessary and will be removed as soon as practicable. While stockpiles are in place, they will be inspected daily, and before and after every storm event. Results of inspections will be recorded in a logbook and maintained at the Site and available for inspection by OER. Excavated soils will be stockpiled on, at minimum, double layers of 8-mil minimum sheeting, will be kept covered at all times with appropriately anchored plastic tarps, and will be routinely inspected. Broken or ripped tarps will be promptly replaced.
All stockpile activities will be compliant with applicable laws and regulations. Soil stockpile areas will be appropriately graded to control run-off in accordance with applicable laws and regulations. Stockpiles of excavated soils and other materials shall be located at least of 50 feet from the property boundaries, where possible. Hay bales or equivalent will surround soil stockpiles except for areas where access by equipment is required. Silt fencing and hay bales will be used as needed near catch basins, surface waters and other discharge points.

1.3 Characterization of Excavated Materials

Soil/fill or other excavated media that is transported off-Site for disposal will be sampled in a manner required by the receiving facility, and in compliance with applicable laws and regulations. Soils proposed for reuse on-Site will be managed as defined in this plan.

1.4 Materials Excavation, Load-Out, and Departure

The PE/QEP overseeing the remedial action will:

- oversee remedial work and the excavation and load-out of excavated material;
- ensure that there is a party responsible for the safe execution of invasive and other work performed under this work plan;
- ensure that Site development activities and development-related grading cuts will not interfere with, or otherwise impair or compromise the remedial activities proposed in this RAWP;
- ensure that the presence of utilities and easements on the Site has been investigated and that any identified risks from work proposed under this plan are properly addressed by appropriate parties;
- ensure that all loaded outbound trucks are inspected and cleaned if necessary before leaving the Site;
- ensure that all egress points for truck and equipment transport from the Site will be kept clean of Site-derived materials during Site remediation.

Locations where vehicles exit the Site shall be inspected daily for evidence of soil tracking off premises. Cleaning of the adjacent streets will be performed as needed to maintain a clean condition with respect to Site-derived materials.

Open and uncontrolled mechanical processing of historical fill and contaminated soil on-Site will not be performed without prior OER approval.

1.5 Off-Site Materials Transport

Loaded vehicles leaving the Site will comply with all applicable materials transportation requirements (including appropriate covering, manifests, and placards) in accordance with applicable laws and regulations, including use of licensed haulers in accordance with 6 NYCRR Part 364. If loads contain wet material capable of causing leakage from trucks, truck liners will be used. Queuing of trucks will be performed on-Site, when possible in order to minimize off Site disturbance. Off-Site queuing will be minimized.

Outbound truck transport routes are described in the remedial report. This routing takes into account the following factors: (a) limiting transport through residential areas and past sensitive sites; (b) use of mapped truck routes; (c) minimizing off-Site queuing of trucks entering the facility; (d) limiting total distance to major highways; (e) promoting safety in access to highways; and (f) overall safety in transport. To the extent possible, all trucks loaded with Site materials will travel from the Site using these truck routes. Trucks will not stop or idle in the neighborhood after leaving the project Site.

1.6 Materials Disposal Off-Site

The following documentation will be established and reported by the PE/QEP for each disposal destination used in this project to document that the disposal of regulated material exported from the Site conforms with applicable laws and regulations: (1) a letter from the PE/QEP or Zoitco LLC to each disposal facility describing the material to be disposed and requesting written acceptance of the material. This letter will state that material to be disposed is regulated material generated at an environmental remediation Site in New York City under a governmental remediation program. The letter will provide the project identity and the name and phone number of the PE/QEP or Zoitco LLC. The letter will include as an attachment a summary of all chemical data for the material being transported; and (2) a letter from each disposal facility stating it is in receipt of the correspondence (1, above) and is approved to accept the material. These documents will be included in the final remedial report.

The Remedial Action Report will include an itemized account of the destination of all material removed from the Site during this remedial action. Documentation associated with disposal of all material will include records and approvals for receipt of the material. This information will be presented in the final remedial report.

All impacted soil/fill or other waste excavated and removed from the Site will be managed as regulated material and will be disposed in accordance with applicable laws and regulations. Historic fill and contaminated soils taken off-Site will be handled as solid waste and will not be disposed at a Part 360-16 Registration Facility (also known as a Soil Recycling Facility). Waste characterization will be performed for off-Site disposal in a manner required by the receiving facility and in conformance with its applicable permits. Waste characterization sampling and analytical methods, sampling frequency, analytical results and QA/QC will be

reported in the final remedial report. A manifest system for off-Site transportation of exported materials will be employed. Manifest information will be reported in the final remedial report. Hazardous wastes derived from on-Site will be stored, transported, and disposed of in compliance with applicable laws and regulations.

If disposal of soil/fill from this Site is proposed for unregulated disposal (i.e., clean soil removed for development purposes), including transport to a Part 360-16 Registration Facility, a formal request will be made for approval by OER with an associated plan compliant with 6NYCRR Part 360-16. This request and plan will include the location, volume and a description of the material to be recycled, including verification that the material is not impacted by site uses and that the material complies with receipt requirements for recycling under 6NYCRR Part 360. This material will be appropriately handled on-Site to prevent mixing with impacted material.

1.7 Materials Reuse On-Site

Soil and fill that is derived from the property that meets the Soil Cleanup Objectives (SCOs) established in this plan may be reused on-Site. The SCOs for on-Site reuse are listed in Section 4.2 of this cleanup plan. 'Reuse on-Site' means material that is excavated during the remedy or development, does not leave the property, and is relocated within the same property and on land with comparable levels of contaminants in soil/fill material, compliant with applicable laws and regulations, and addressed pursuant to the NYC VCP agreement subject to Engineering and Institutional Controls. The PE/QEP will ensure that reused materials are segregated from other materials to be exported from the Site and that procedures defined for material reuse in this remedial plan are followed. The expected location for placement of reused material is shown in Section 4.2. Organic matter (wood, roots, stumps, etc.) or other waste derived from clearing and grubbing of the Site will not be buried on-Site. Soil or fill excavated from the site for grading or other purposes will not be reused within a cover soil layer or within landscaping berms.

1.8 Demarcation

After completion of hotspot removal and any other invasive remedial activities, and prior to backfilling, the top of the residual soil/fill will be defined by one of three methods: (1) placement of a demarcation layer. The demarcation layer will consist of geosynthetic fencing or equivalent material to be placed on the surface of residual soil/fill to provide an observable reference layer.

A description or map of the approximate depth of the demarcation layer will be provided in the SMP; or (2) a land survey of the top elevation of residual soil/fill before the placement of cover soils, pavement and associated sub-soils, or other materials or structures or, (3) all materials beneath the approved cover will be considered impacted and subject to site management after the remedy is complete. Demarcation may be established by one or any combination of these three methods. As appropriate, a map showing the method of demarcation for the Site and all associated documentation will be presented in the RAR.

This demarcation will constitute the top of the site management horizon. Materials within this horizon require adherence to special conditions during future invasive activities as defined in the Site Management Plan.

1.9 Import of Backfill Soil From Off-Site Sources

This Section presents the requirements for imported fill materials to be used below the cover layer and within the clean soil cover layer. All imported soils will meet OER-approved backfill and cover soil quality objectives for this Site. Imported soils will not exceed groundwater protection standards established in Part 375. Imported soils for Track 1 remedial action projects will not exceed Track 1 SCO's.

A process will be established to evaluate sources of backfill and cover soil to be imported to the Site, and will include an examination of source location, current and historical use(s), and any applicable documentation. Material from industrial sites, spill sites, environmental remediation sites or other potentially contaminated sites will not be imported to the Site.

The following potential sources may be used pending attainment of backfill and cover soil quality objectives:

- Clean soil from construction projects at non-industrial sites in compliance with applicable laws and regulations;
- Clean soil from roadway or other transportation-related projects in compliance with applicable laws and regulations;
- Clean recycled concrete aggregate (RCA) from facilities permitted or registered by the regulations of NYS DEC.
- All materials received for import to the Site will be approved by a PE/QEP and will be in compliance with provisions in this remedial plan. The final remedial report will report

the source of the fill, evidence that an inspection was performed on the source, chemical sampling results, frequency of testing, and a Site map indicating the locations where backfill or soil cover was placed.

- All material will be subject to source screening and chemical testing.
- Inspection of imported fill material will include visual, olfactory and PID screening for evidence of contamination. Materials imported to the Site will be subject to inspection, as follows:
- Trucks with imported fill material will be in compliance with applicable laws and regulations and will enter the Site at designated locations;
- The PE/QEP is responsible to ensure that every truck load of imported material is inspected for evidence of contamination; and
- Fill material will be free of solid waste including pavement materials, debris, stumps, roots, and other organic matter, as well as ashes, oil, perishables or foreign matter.

Composite samples of imported material will be taken at a minimum frequency of one sample for every 500 cubic yards of material. Once it is determined that the fill material meets imported backfill or cover soil chemical requirements and is non-hazardous, and lacks petroleum contamination, the material will be loaded onto trucks for delivery to the Site.
Recycled concrete aggregate (RCA) will be imported from facilities permitted or registered by NYSDEC. Facilities will be identified in the final remedial report. A PE/QEP is responsible to ensure that the facility is compliant with 6NYCRR Part 360 registration and permitting requirements for the period of acquisition of RCA. RCA imported from compliant facilities will not require additional testing, unless required by NYSDEC under its terms for operation of the facility. RCA imported to the Site must be derived from recognizable and uncontaminated concrete. RCA material is not acceptable for, and will not be used as cover material.

1.10 Fluids Management

All liquids to be removed from the Site, including dewatering fluids, will be handled, transported and disposed in accordance with applicable laws and regulations. Liquids discharged into the New York City sewer system will receive prior approval by New York City Department of Environmental Protection (NYC DEP). The NYC DEP regulates discharges to the New York

City sewers under Title 15, Rules of the City of New York Chapter 19. Discharge to the New York City sewer system will require an authorization and sampling data demonstrating that the groundwater meets the City's discharge criteria. The dewatering fluid will be pretreated as necessary to meet the NYC DEP discharge criteria. If discharge to the City sewer system is not appropriate, the dewatering fluids will be managed by transportation and disposal at an off-Site treatment facility.

Discharge of water generated during remedial construction to surface waters (i.e. a stream or river) is prohibited without a SPDES permit issued by New York State Department of Environmental Conservation.

1.11 Stormwater Pollution Prevention

Applicable laws and regulations pertaining to stormwater pollution prevention will be addressed during the remedial program. Erosion and sediment control measures identified in this remedial plan (silt fences and barriers, and hay bale checks) will be installed around the entire perimeter of the remedial construction area and inspected once a week and after every storm event to ensure that they are operating appropriately. Discharge locations will be inspected to determine whether erosion control measures are effective in preventing significant impacts to receptors. Results of inspections will be recorded in a logbook and maintained at the Site and available for inspection by OER. All necessary repairs shall be made immediately. Accumulated sediments will be removed as required to keep the barrier and hay bale check functional. Undercutting or erosion of the silt fence toe anchor will be repaired immediately with appropriate backfill materials. Manufacturer's recommendations will be followed for replacing silt fencing damaged due to weathering.

1.12 Contingency Plan for Unknown Contamination Sources

This contingency plan is developed for the remedial construction to address the discovery of unknown structures or contaminated media during excavation. Identification of unknown contamination source areas during invasive Site work will be promptly communicated to OER's Project Manager. Petroleum spills will be reported to the NYS DEC Spill Hotline. These findings will be included in the daily report. If previously unidentified contaminant sources are found during on-Site remedial excavation or development-related excavation, sampling will be

performed on contaminated source material and surrounding soils and reported to OER. Chemical analytical testing will be performed for TAL metals, TCL volatiles and semi-volatiles, TCL pesticides and PCBs, as appropriate.

1.13 Odor, Dust, and Nuisance Control

Odor Control

All necessary means will be employed to prevent on- and off-Site odor nuisances. At a minimum, procedures will include: (a) limiting the area of open excavations; (b) shrouding open excavations with tarps and other covers; and (c) use of foams to cover exposed odorous soils. If odors develop and cannot otherwise be controlled, additional means to eliminate odor nuisances will include: (d) direct load-out of soils to trucks for off-Site disposal; and (e) use of chemical odorants in spray or misting systems.

This odor control plan is capable of controlling emissions of nuisance odors. If nuisance odors are identified, work will be halted and the source of odors will be identified and corrected. Work will not resume until all nuisance odors have been abated. OER will be notified of all odor complaint events. Implementation of all odor controls, including halt of work, will be the responsibility of the PE/QEP's certifying this remedial plan.

Dust Control

Dust management during invasive on-Site work will include, at a minimum:

- Use of a dedicated water spray methodology for roads, excavation areas and stockpiles.
- Use of properly anchored tarps to cover stockpiles.
- Exercise extra care during dry and high-wind periods.
- Use of gravel or recycled concrete aggregate on egress and other roadways to provide a clean and dust-free road surface.

This dust control plan is capable of controlling emissions of dust. If nuisance dust emissions are identified, work will be halted and the source of dusts will be identified and corrected. Work will not resume until all nuisance dust emissions have been abated. OER will be notified of all dust complaint events. Implementation of all dust controls, including halt of work, will be the responsibility of the PE/QEP's responsible for certifying this remedial plan.

Other Nuisances

Noise control will be exercised during the remedial program. All remedial work will conform, at a minimum, to NYC noise control standards.

Rodent control will be provided during Site clearing and grubbing and during the remedial program, as necessary, to prevent nuisances.

APPENDIX 5

MANUFACTURER SPECIFICATIONS FOR VAPOR BARRIER

Xtreme® Vapor Barriers

Distributed by:
Best Materials LLC
Phone: **800-474-7570, 602.272.8128**
Email: **sales@bestmaterials.com**
Website: **www.bestmaterials.com**

TEX-TRUDE, LP TECHINCAL DATA SHEET

Product Description:
Tex-Trude Xtreme Vapor Barrier / Retarder is a high performance material designed for use under concrete slabs to stop moisture migration and to control radon gas, methane, and other soil gases or contaminants. Xtreme Vapor Barriers / Retarders are extruded in a single sheet of material composed of virgin polyolefin resins. This high puncture resistant Vapor Barrier / Retarder has superior performance to other materials in the industry and is available in 10 mil, 15 mil and 20 mil.

Installation:
Under Concrete Slab: Install Tex-Trude Xtreme Vapor Barrier/ Retarder over tamped earth, sand or aggregate base. Unroll and completely cover the area to receive the building slab or other specified areas. The seams must overlap a minimum of six inches and be sealed with Xtreme Seal Tape or heat welded. All exposed penetrations also must be sealed using Xtreme Seal Tape. A physical inspection of the area should be performed prior to installation.

Limited Warranty:
Tex-Trude warrants this product to meet the published specifications and to be free of defects in workmanship and materials at the time of shipment from our factory. If any Xtreme material proves to contain manufacture defects that substantially affect the performance, then Tex-Trude will at their option replace the material or refund the purchase price. This limited warranty is the only warranty offered by Tex-Trude, LP as it relates to Xtreme products. There are no other warranties, including the implied warranties of merchantability or fitness for a particular purpose. Tex-Trude specifically disclaims liability for any incidental, consequential, or other damages.

Tex-Trude, LP
2001 Sheldon Road
Channelview, Texas 77530

Technical Data	ASTM E 1745, Class A,B,C – standard specification for water vapor retarders used in contact with soil or granular fill under concrete slabs				
Physical Properties		ASTM E 1745 Class A	Xtreme 10 mil	Xtreme 15 mil	Xtreme 20 mil
Water Vapor Permeance	ASTM F 1249 – Vapor Transmission Rate	0.1 perms	0.018	0.0078	0.0055
Puncture Resistance	ASTM 1709 – Test method for impact resistance of plastic film by free-fallen dart method	2200grams	3000	4000	5600
Tensile Strength	ASTM D 882 – Method for tensile properties of thin plastic sheeting	45.0 lbf/in^3	58	64	81
Methane Transmission Rate	ASTM 1434 – Standard test method for determining gas permeability	GTR	298.01	252.55	163.71
Life Expectancy	ASTM E 154 – Test methods for vapor retarders used in contact with earth under concrete slabs, on walls or as ground cover		Indefinite	Indefinite	Indefinite
Roll Dimensions			14x200 2800 ft^2	14x150 2100 ft^2	12x150 1800 ft^2
Roll Weight			134.6 lb	151.5 lb	173.2 lb
Note: Perm Unit = Grains/(ft^2 * HR *in·HG) GTR = Gas Transmission Rate					
The information provided above was preformed and tested by an Independent Laboratory					

ISO 9001 – 2008 CERTIFIED

APPENDIX 6

CONSTRUCTION HEALTH AND SAFETY PLAN

CONSTRUCTION
HEALTH AND SAFETY PLAN

36-33 31st Street
Long Island City, New York 11106
Block 531, Lot 23

ACT Project No. 8459-LINY

December 3, 2015

Prepared for:

Zoitco LLC
21-16 31st Avenue
Astoria, New York 11106

Prepared by:

Advanced Cleanup Technologies, Inc.
110 Main Street, Suite 103
Port Washington, New York 11050

TABLE OF CONTENTS **Page No.**

1.0 INTRODUCTION 1

1.1 Purpose 1
1.2 Site Description 1
1.3 Environmental Concerns 2

2.0 SITE PERSONNEL 2

3.0 PROTECTIVE EQUIPMENT 4

4.0 HAZARD EVALUATION 5

4.1 Chemical Exposure 5
4.2 Temperature Hazards 6

***4.2.1 Heat Exposure Hazards* 6**
***4.2.2 Cold Exposure Hazards* 7**

4.3 Fire Prevention 8
4.4 Operation of Heavy Equipment 8

5.0 MANAGEMENT AND PLANNING 9

5.1 General Site Control 9
5.2 Health and Safety Communication 9
5.3 Air Monitoring 10

***5.3.1 Community Air Monitoring* 10**
***5.3.2 Activity-Specific Air Monitoring* 11**

5.4 Dust Control 12
5.5 Spill Control and Prevention 12
5.6 Decontamination Procedures 12
5.7 Soil Disposal 13

6.0 EMERGENCY MEDICAL CARE AND PROCEDURES 13

TABLE OF CONTENTS (Continued)

TABLES

NUMBER	TITLE
1	NIOSH Exposure Limits

FIGURES

NUMBER	TITLE
1	Hospital Route

APPENDICES

SECTION	TITLE
A	Chemical Safety Cards
B	Respirator Fit Test Procedures

1.0 INTRODUCTION

A mixed use 7-story building with residential units and commercial space and a cellar for building services is being proposed for construction at the property located at 36-33 31st Street, Long Island City, New York ("the Site"). This Construction Health and Safety Plan (CHASP) have been prepared to identify site-specific health and safety procedures to be followed by on-site contractors during excavation and construction activities at the site. All activities performed under this CHASP are targeted to comply with Occupational Safety and Health Administration (OSHA) Regulations 29 CFR Part 1910, *et seq.*

1.1 Purpose

The purpose of this CHASP is to provide the contractors' field personnel, and other visitors with an understanding of the potential chemical and physical hazards that exist or may arise while portions of this project are being performed. The primary objective is to ensure the well being of all field personnel and the community surrounding this site. A copy of this CHASP will be available to anyone that requests it. Visiting personnel (e.g. government officials, administrators, bank inspectors, assessors, etc.) that will have limited exposure to the site native soil/fill material during construction activities will be instructed on how to reduce the probability of exposure to site contaminants, but will not be required to read the CHASP.

All on-site personnel shall familiarize themselves with the contents of this CHASP and the excavation and construction activities planned for the site. Personnel choosing not to comply with this CHASP will be removed from the worksite.

1.2 Site Description

The Site is located on the east side of 31st Street between 36th Avenue and 37th Avenue in a residential, commercial and industrial area in the western portion of the borough of Queens in New

York City. The Site is located approximately 0.91 feet east of the East River and 0.97 miles north of Newtown Creek. Located to the north of the site is a three-story residential apartment building, to the east is a two-story residential apartment building, to the south is a three-story residential apartment building and to the west is a one-story commercial building occupied by Valvco and a two-story residential apartment building.

The site (Block 600, Lot 12) currently consists of a vacant three-story residential apartment building with a full basement and a detached garage. The building contains two residential apartments. Around the perimeter of the building the site is covered with concrete.

1.3 Environmental Concerns

A Phase II Investigation consisting of soil borings and soil vapor sampling was performed by Advanced Cleanup Technologies, Inc (ACT) on September 9 and 10, 2015 in which 4 soil vapor and 12 soil samples were collected.

The purpose of the sampling event was to assess the environmental quality of the Site prior to its development, specifically the potential source locations which have been assessed for the nature and extent of contamination within the subsurface. The sampling event identified metals in the soil in the southern and exterior of the building exceeding regulatory guidance values. No free product was identified during the investigation.

2.0 SITE PERSONNEL

All on-site personnel shall have training in accordance with the regulations codified at 29 CFR 1910.20. Proof that the qualifications of the on-site personnel comply with these regulations will be maintained by the Site Supervisor prior to their being allowed to be included in the on-Site workforce.

All on-site personnel shall familiarize themselves with the contents of the CHASP, the scope of the Remedial Action Plan (RAP) for the Site and attend a daily site specific health and safety briefing prior to the commencement of work activities. Personnel choosing not to comply with this CHASP will be removed from the worksite.

ACT's Site Supervisor will have oversight responsibility over the project to ensure that this CHASP is properly implemented and that ACT and its subcontractors adhere to all OSHA regulations and other established industry health and safety practices.

Each contractor will designate an on-site individual responsible for health and safety issues relating to excavation and construction activities. Each contractor will communicate to the Site Supervisor the name of this individual and what specific actions are to be taken by each contractor during that work day that will be required to comply with the CHASP.

The Site Supervisor will coordinate the activities of all other contractors on-site so as not to jeopardize the health and safety of any personnel on-site. In addition, the Site Supervisor will continually monitor and inspect personnel and equipment for compliance with established safe work practices.

A list of the pertinent personnel authorized to supervise site health and safety operations is presented below:

Title	Name	Telephone Number
Project Manager ACT	Mark Gelband	516-441-5800, Ext. 104 718-577-7639 (Mobile)
Health and Safety Officer ACT	Yisong Yang	516-441-5800, Ext. 108 718-508-2970 (Mobile)
Alternate ACT	Paul P. Stewart	516-441-5800, Ext. 103 516-840-8197 (Mobile)

3.0 PROTECTIVE EQUIPMENT

Personal Protective Equipment (PPE) is divided into the following four categories based on the degree of protection afforded:

Level A: This PPE level will be selected when the greatest level of skin, respiratory, and eye protection is required. It includes positive pressure, full face-piece self-contained breathing apparatus (SCBA), or NIOSH-approved positive pressure supplied air respirator with escape SCBA and a totally-encapsulating chemical-protective suit.

Level B: This PPE level will be selected when the highest level of respiratory protection is necessary but a lesser level of skin protection is needed. It includes positive pressure, full face-piece SCBA, or NIOSH-approved positive pressure supplied air respirator with escape SCBA and hooded chemical-resistant clothing such as overalls and long-sleeved jacket, coveralls, one or two-piece chemical-splash suit or disposable chemical-resistant overalls.

Level C: This PPE level will be selected when the concentration(s) and type(s) of airborne substance(s) present in the work area is known and the criteria for using air purifying respirators are met. It includes full-face or half-mask, NIOSH-approved air purifying respirators and hooded chemical-resistant clothing such as overalls and long-sleeved jacket, coveralls, one or two-piece chemical-splash suit or disposable chemical-resistant overalls.

Level D: This PPE level will be selected for nuisance contamination only. It includes coveralls, gloves, chemical-resistant steel toe and shank boots, safety glasses or chemical splash goggles, hard hat, escape mask and face shield.

PPE shall be selected in accordance with the site air monitoring program (Section 5.3), OSHA 29 CFR 1910.120(c), (g), and 1910.132. Protective equipment shall be NIOSH-approved and respiratory protection shall conform to OSHA 29 CFR Part 1910.133 and 1910.134 specifications; head protection shall conform to 1910.135; eye and face protection shall conform to 1910.133; and foot protection shall conform to 1910.136. The only true difference among the

levels of protection from D thru B is the addition of the type of respiratory protection.

Before site personnel are required to use any respirator with a negative or positive pressure tight-fitting face-piece, the personnel will be fit tested with the same make, model, style, and size of respirator that will be used. The fit test shall be administered using only an OSHA-accepted fit test protocol. The OSHA-accepted fit test protocols and procedures provided for in 29 CFR 1910.120 are contained in Appendix B of this CHASP.

All Site workers will be required to participate in a comprehensive PPE program. The PPE program will consist of daily "Tailgate" Health and Safety meetings, proper inspection, donning, use, maintenance, storage and decontamination of protective clothing and equipment, use of protective equipment in temperature extremes and monitoring of co-workers and the work environment.

The Site Supervisor will determine the level of protection required for all field activities and whether the level of protection should be upgraded. It is anticipated that all on-site activities will be conducted in Level D PPE, unless otherwise upgraded by the Site Supervisor. Changes in the level of protection will be recorded in the dedicated site logbook along with the rationale for the changes.

4.0 HAZARD EVALUATION

4.1 Chemical Exposure

A list of chemicals including VOCs, SVOCs, metals, pesticides and PCBs that are present in subsurface soil at the Site is provided in Table 1. These types of contaminants at the detected concentrations represent a low to moderate potential for exposure. The standards listed in the table represent Immediate Danger to Life and Health (IDLH), Time-Weighted Average (TWA) and Short-Term Exposure Limit (STEL).

The primary routes of exposure for these chemicals are inhalation, ingestion and absorption

through the skin and mucous membranes. The health risks associated with the exposure to these substances during construction activities will be minimized through a combination of education, personal protection equipment (PPE) and dust control measures.

4.2 Temperature Hazards

4.2.1 Heat Exposure Hazards

Heat stress may occur even in moderate temperature areas and may present any or all of the following:

Heat Rash

Heat rash results from continuous exposure to heat, humid air, and chafing clothes. Heat rash is uncomfortable and decreases the ability to tolerate heat.

Heat Cramps

Cramps result from the inadequate replacement of body electrolytes lost through perspiration. Signs include severe spasms and pain in the extremities and abdomen.

Heat Exhaustion

Exhaustion results from increased stress on the vital organs of the body in the effort to meet the body's cooling demands. Signs include shallow breathing; pale, cool, moist skin; profuse sweating; and dizziness.

Heat Stroke

Heat stroke results from an overworked cooling system. Heat stroke is the most serious form of heat stress. Body surfaces must be cooled and medical help must be obtained immediately to prevent severe injury and/or death. Signs include red, hot, dry skin, absence of perspiration, nausea, dizziness and confusion, strong, rapid pulse, coma, and death.

The following procedures should be followed to prevent or control heat stroke:

A. Replace body fluids (water and electrolytes) lost through perspiration. Solutions may include a 0.1% salt and water solution or commercial mixes such as "Gatorade". Employees must be encouraged to drink more than the amount required in order to satisfy thirst.

B. Use cooling devices to aid the natural body ventilation. Cooling occurs through evaporation of perspiration and limited body contact with heat-absorbing protective clothing. Utilize fans and air conditioners to assist in evaporation. Long, cotton underwear is suggested to absorb perspiration and limit any contact with heat-absorbing protective clothing (i.e., coated Tyvek suits).

C. Provide shelter against heat and direct sunlight to protect personnel. Take breaks in shaded areas.

D. Rotate workers utilizing protective clothing during hot weather.

E. Establish a work regime that will provide adequate rest periods, with personnel working in shifts.

4.2.2 Cold Exposure Hazards

Work schedules will be adjusted to provide sufficient rest periods in a heated area for warming up during operations conducted in cold weather. Also, thermal protective clothing such as wind and/or moisture resistant outerwear is recommended to be worn.

If work is performed continuously in the cold at or below -7 °C (20 °F), including wind chill factor, heated warming shelters (company vehicles, rest rooms, etc.) shall be made available nearby and the worker should be encouraged to use these shelters at regular intervals, the frequency depending on the severity of the environmental exposure. The onset of heavy shivering, frostnip, the feeling of excessive fatigue, drowsiness, irritability, or euphoria, is indications for immediate return to the shelter. When entering the heated shelter, the outer layer of clothing shall be removed and the remainder of the clothing loosened to permit sweat evaporation.

A change of dry work clothing shall be provided as necessary to prevent workers from

returning to their work with wet clothing. Dehydration, or the loss of body fluids, occurs in the cold environment and may increase the susceptibility of the worker to cold injury due to a significant change in blood flow to the extremities. Warm sweet drinks and soups should be provided at the work site to provide caloric intake and fluid volume. The intake of coffee should be limited because of a diuretic and circulatory effect (adapted from TLV's and Biological Exposure Indices 1988-1989, ACGIH).

4.3 Fire Prevention

One portable fire extinguisher with a rating (ratio) of 20 pound A/B/C will be conspicuously and centrally located at the site. Portable extinguishers will be properly tagged with inspection dates and maintained in accordance with standard maintenance procedures for portable fire extinguishers. The following fire prevention guidelines are to be followed:

- Only approved safety cans will be used to transport and store flammable liquids.
- All gasoline and diesel-driven engines requiring refueling must be shut down and allowed to cool prior to filling.
- Smoking is not allowed during any operations within the work area in which petroleum products or solvents in free-floating, dissolved, or vapor forms, or other flammable liquids may be present.
- No open flame or spark is allowed in any area containing petroleum products or other flammable liquids.

4.4 Operation of Heavy Equipment

When operating or working around heavy equipment, the Site Supervisor will ensure that site personnel conform to this CHASP to include the wearing of proper clothing such as hard hats and safety glasses. Any specific health and safety issues relating to the equipment to be used on-site that work day will be covered in the daily health and safety briefing.

5.0 MANAGEMENT AND PLANNING

5.1 General Site Control

The Site Supervisor will establish a command post within the Site. A perimeter site fence, as required by the New York City Department of Buildings, will be erected to define the limits of the Site. All work must be performed within the site fence. Flagmen and traffic control will be provided as required at all times.

The Site will be left hazard-free at the end of each work day. In addition, all fence gates will be operable and locked in a closed position, all site fencing will be properly standing or braced and site lighting will be operational. The property owner will provide site security during off-work hours.

During site excavation, worker exposure to potential hazardous substances will be minimized through Health and Safety Communication (Section 5.2), Decontamination Procedures (Section 5.3) and Dust Control Methods (Section 5.3).

5.2 Health and Safety Communication

The relatively small size of the work area makes normal verbal communication the primary mode of communication for the project. In the event that verbal communication is impossible the following hand signals will be used.

Gripping a partners wrist = “Leave area immediately”
Hands on top of head = “ I need assistance”
Thumbs up = “OK; I’m alright; I understand”
Thumbs down = “No; Negative”

Daily Health and Safety Meetings will address a list of tasks to be performed that day, the equipment and machinery involved, and any hazards identified with this type of activity. Workers will be given the opportunity to list out additional perceived hazards, and discuss safe work practices while in these operations. The daily safety meeting will also be an opportunity to review the work performed the previous day, any hazards encountered, mitigating actions taken, and suggestions for future improvement.

5.3 Air Monitoring

This section of the CHASP discusses air monitoring that will be performed to address community and site personnel concerns of possible exposures due to airborne migration of suspected contaminants that may be encountered during on-site field activities.

Periodic air monitoring will be performed for VOCs at the perimeter of the work area once every two hours during field activities. Continuous air monitoring will be performed for VOCs during all ground intrusive activities such as soil excavation, loading and offsite transport. All ambient air readings will be recorded and provided as an appendix in the P.E.-certified Remedial Closure Report.

5.3.1 Community Air Monitoring

Periodic air monitoring for VOCs at the perimeter of the work area will be accomplished as follows:

- VOCs will be monitored at the upwind perimeter of the work area at the start of each work day and periodically thereafter to establish background conditions. The monitoring will be performed utilizing a Photovac 2020 portable Photoionization Detector (PID) or equivalent equipped with a 10.6 eV lamp capable of detecting the types of contaminants known or suspected to be present.
- VOCs will be monitored at the downwind perimeter of the work area daily at 2 hour

intervals. If ambient air concentrations of total organic vapors at the downwind perimeter of the work area exceeds 5 parts per million (ppm) above background, work activities will be halted and monitoring continued. If the total organic vapor level readily decreases (per instantaneous readings) below 5 ppm over background, work activities will resume with continued monitoring.

- If total organic vapor levels at the downwind perimeter of the work area persist at levels in excess of 5 ppm over background but less than 25 ppm, work activities will be halted, the source of vapors identified, corrective actions taken to abate emissions, and monitoring continued. After these steps, work activities will resume provided that the total organic vapor level 200 feet downwind of the work area or half the distance to the nearest potential receptor or residential/commercial structure, whichever is less - but in no case less than 20 feet, is below 5 ppm over background for the 15 minute average.

- If the organic vapor level is above 25 ppm at the perimeter of the work area, activities will be shutdown.

5.3.2 Activity-Specific Air Monitoring

Continuous air monitoring will be conducted inside the work area for VOC levels during all ground-intrusive activities, such as soil excavation, loading and offsite transport in accordance with 29 CFR 1910.120(h). Continuous air monitoring will also be performed utilizing a Photovac 2020 PID or equivalent. Continuous air monitoring will be performed in the following manner:

- Volatile organic compounds will be monitored inside the work area of construction and health and safety personnel on a continuous basis. The PID will be programmed to calculate 15-minute running average concentrations. If ambient air concentrations of total organic vapors inside the work area exceed 5 ppm above background, work activities will be halted and monitoring continued. If the total organic vapor level readily decreases (per instantaneous readings) below 5 ppm over background, work activities will resume with continued monitoring.

- If total organic vapor levels inside the work area persist at levels in excess of 5 ppm over background but less than 25 ppm, work activities will be halted, the source of vapors identified, corrective actions taken to abate emissions, and monitoring continued. After these steps, work activities will resume provided that the total organic vapor level inside the work area or half the distance to the nearest potential receptor or residential/commercial structure, whichever is less - but in no case less than 20 feet, is below 5 ppm over background for the 15 minute average.

5.4 Dust Control

Each contractor shall control any dust generated on-site that may be produced during work activities. Dust control measures will be employed to ensure that there is no off-site migration of dust into the community by use of a stream of water applied through a fine spray nozzle. The NYC hydrant used for a water source will be fitted with a RPZ control device to prevent inadvertent contamination of the public water supply. In addition, a solid barrier fence will be installed around the perimeter of the property to control any fugitive migration of dust.

5.5 Spill Control and Prevention

Spills associated with site activities may be attributed to project specific heavy equipment and include gasoline, diesel and hydraulic oil. In the event of a leak or a release, site personnel will inform their supervisor immediately, locate the source of spillage and stop the flow if it can be done safely. A spill containment kit including absorbent pads, booms and/or granulated speedy dry absorbent material will be available to site personnel to facilitate the immediate recovery of the spilled material.

Daily inspections of site equipment components including hydraulic lines, fuel tanks, etc. will be performed by their respective operators as a preventative measure for equipment leaks and to ensure equipment soundness. In the event of a spill, site personnel will immediately notify the NYSDEC (1-800-457-7362), and a spill number will be generated.

5.6 Decontamination Procedures

Contaminants will be removed from personnel and equipment through a decontamination regiment. Workers will be required to remove any contaminated PPE before leaving the Site. Work

boots, safety glasses, hard hats and work gloves will be washed in a two percent Alconox Solution, followed by three consecutive clean water rinses. All wash and rinse water will be containerized into a DOT drum. Gross contaminants will be brushed from worker's clothing before leaving the Site. A station for hand washing will also be set up.

Decontamination of heavy equipment will also be required before leaving the Site. Excavator buckets and vehicle wheels or tracks will be brushed clean with a broom, before being moved off-site. Reusable hand tools will be washed in a two percent Alconox solution, followed by a series of clean water rinses. All wash and rinse water will be containerized in appropriate steel drums for proper disposal.

5.7 Soil Disposal

Any contaminated soil (organic or inorganic constituents) encountered during the excavation/grading activities will be segregated, stockpiled on-site onto polyethylene sheeting and covered with polyethylene sheeting to prevent exposure to workers and the community until proper transportation and disposal in accordance with all NYSDEC Regulations is arranged.

6.0 EMERGENCY MEDICAL CARE AND PROCEDURES

If a personnel accident occurring on-site requires emergency care, immediate care will be administered appropriate to the injury in accordance with established Red Cross procedures and practices. In the event of serious injury to on-site personnel, the Emergency Medical Service of the City of New York (EMS) will be summoned to remove the injured individual to the nearest medical facility for treatment as follows.

Ambulance:	**911**
Emergency Medical:	**911**
Fire Department:	**911**
Mount Sinai Hospital Queens:	**(718) 932-1000**

Police Department:	**911**
Poison Control Center:	**(516) 542-2323**

The nearest medical facility is Mount Sinai Hospital Queens which is located at 25-10 30th Avenue, Astoria, New York 11102, approximately 1.1 miles from the Site. Transport will be by on-site vehicle or by calling NYC EMS personnel. A map of the route to this hospital is attached as Figure 1. Directions to the hospital from the site are provided below.

- **Head north on 31st Street towards 36th Avenue;**
- **Turn left onto 34th Avenue;**
- **Turn right onto Crescent Street;**
- **Turn right onto 30th Avenue;**
- **Mount Sinai Hospital Queens will be on the right.**

OSHA approved First Aid Kits will be maintained on-Site along with a First Aid blanket for treating shock, and will be readily accessible to all workers if an emergency occurs. The emergency signal for evacuation of personnel from the Site will be three (3) long blasts of a vehicle horn with the off-site rallying point designated as the northeast corner of 31st Street and 37th Avenue. If in the event of a fire, explosion or other life threatening incident on-site, the emergency signal above will be sounded and all personnel will evacuate the Site. The appropriate New York City emergency personnel (fire, police, etc.) will be immediately notified.

All injuries, no matter how slight, will be reported to the site safety supervisor immediately. The Site Supervisor will complete an accident report for all incidents. Some injuries, such as severe lacerations or burns, may require immediate treatment. Unless required due to immediate danger, seriously injured persons should not be moved without direction from attending medical personnel. The Site Supervisor will record occupational injuries and illnesses within 48 hours of occurrence, as required by statute.

Figure 1

Hospital Route

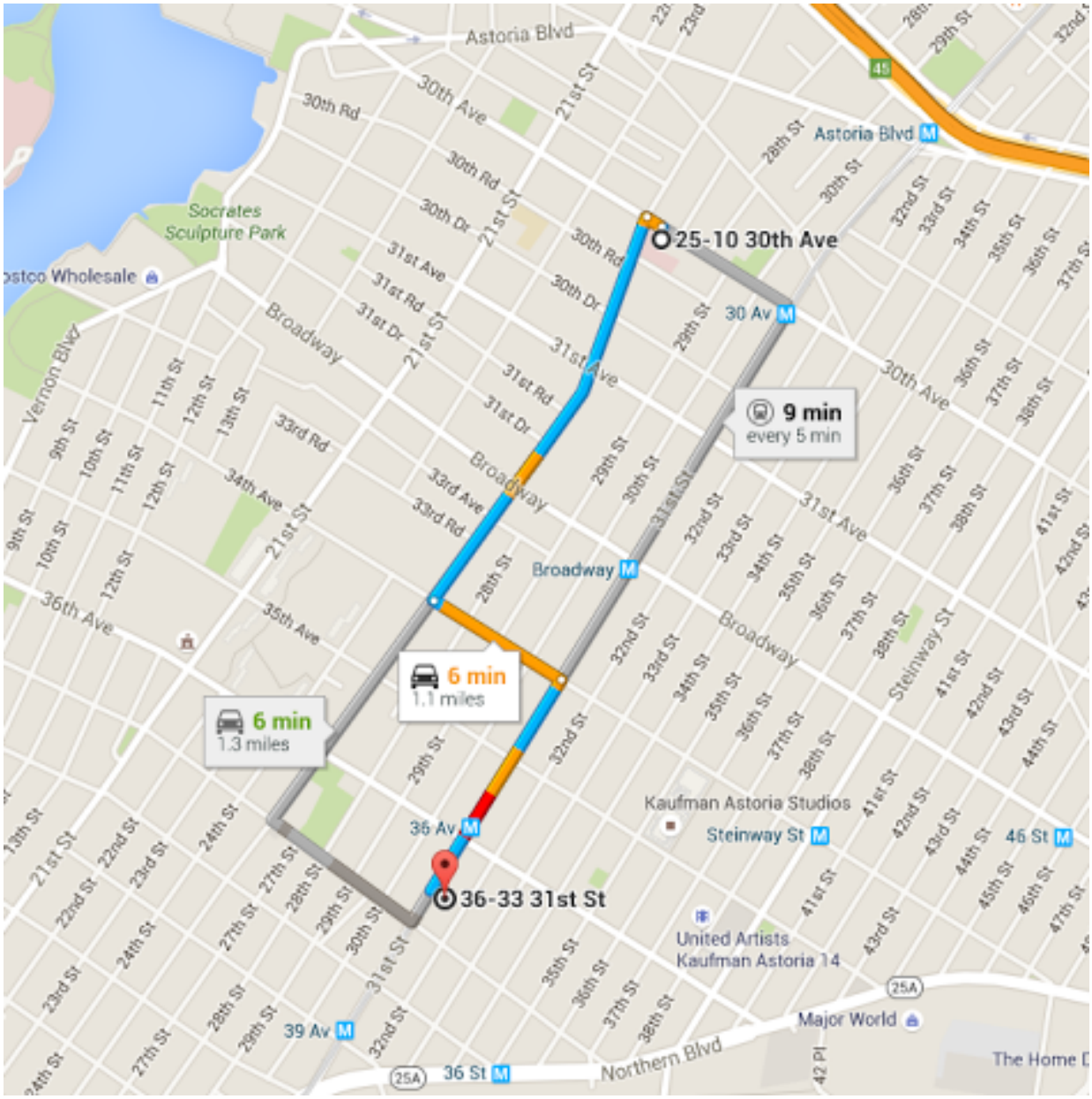

Souce: Google Map

N

Hospital Route Map

Advanced Cleanup Technologies, Inc.
ENVIRONMENTAL CONSULTANTS
110 Main Street, Suite 103, Port Washington, New York 11050
Tel: 516-441-5800 Fax: 516-441-5511

Project No.: 8459-LINY	Figure No.: 2
Date: 09/24/2015	Scale: Not To Scale

Table 1

NIOSH Exposure Limits

TABLE 1
NIOSH Exposure Limits (mg/m^3)[1]

Chemical	IDLH	TWA	STEL
Benzene	1625	1.63	8.13
Toluene	1900	375	560
Ethylbenzene	3530	435	545
Xylenes	3970	435	655
Naphthalene	1250	50	75
Acenaphthene	N.L.	N.L.	N.L.
Anthracene	N.L.	N.L.	N.L.
Pyrene	N.L.	N.L.	N.L.
Chrysene	N.L.	N.L.	N.L.
Benzo(b)Fluoranthene	N.L.	N.L.	N.L.
Benzo(a)Pyrene	N.L.	N.L.	N.L.
Benzo(ghi)Perylene	N.L.	N.L.	N.L.
Polychlorinated Biphenyl	5.0	0.5	N.L.
Aldrin	25	0.25	N.L.
Endrin	2	0.1	N.L.
Chlordane	100	0.5	N.L.
Toxaphene	200	0.5	N.L.
DDT	500	1	N.L.
Silver	10	0.01	N.L.
Barium	1100	0.5	N.L.
Cadmium	9	0.05	N.L.
Selenium	1	0.2	N.L.
Lead	100	0.05	N.L.
Mercury	10	0.05	N.L.
Arsenic	5	0.01	N.L.
Chromium	250	0.5	N.L.

[1] *All values taken from NIOSH International Chemical Safety Cards (Http://www.cdc.gov/niosh/ipcsneng/nengname.html)*
N.L..... None Listed

Appendix A

Chemical Safety Cards

International Chemical Safety Cards

BENZENE

ICSC: 0015

UNEP

National Institute for Occupational Safety and Health NIOSH

Cyclohexatriene
Benzol
C_6H_6
Molecular mass: 78.1

ICSC # 0015
CAS # 71-43-2
RTECS # CY1400000
UN # 1114
EC # 601-020-00-8
June 05, 2003 Validated

TYPES OF HAZARD/ EXPOSURE	ACUTE HAZARDS/ SYMPTOMS	PREVENTION	FIRST AID/ FIRE FIGHTING
FIRE	Highly flammable.	NO open flames. NO sparks, and NO smoking	Powder, AFFF, foam, carbon dioxide.
EXPLOSION	Vapour/air mixtures are explosive. Risk of fire and explosion: see Chemical Dangers.	Closed system, ventilation, explosion-proof electrical equipment and lighting. Do NOT use compressed air for filling, discharging, or handling. Use non-sparking handtools. Prevent build-up of electrostatic charges (e.g., by grounding).	In case of fire: keep drums, etc., cool by spraying with water.
EXPOSURE		AVOID ALL CONTACT!	
•INHALATION	Dizziness. Drowsiness. Headache. Nausea. Shortness of breath. Convulsions. Unconsciousness.	Ventilation, local exhaust, or breathing protection.	Fresh air, rest. Refer for medical attention.
•SKIN	MAY BE ABSORBED! Dry skin. Redness. Pain. (Further see Inhalation).	Protective gloves. Protective clothing.	Remove contaminated clothes. Rinse skin with plenty of water or shower. Refer for medical attention.
•EYES	Redness. Pain.	Face shield, or eye protection in combination with breathing protection.	First rinse with plenty of water for several minutes (remove contact lenses if easily possible), then take to a doctor.
•INGESTION	Abdominal pain. Sore throat. Vomiting. (Further see Inhalation).	Do not eat, drink, or smoke during work.	Rinse mouth. Do NOT induce vomiting. Refer for medical attention.

SPILLAGE DISPOSAL	STORAGE	PACKAGING & LABELLING

Remove all ignition sources. Collect leaking and spilled liquid in sealable containers as far as possible. Absorb remaining liquid in sand or inert absorbent and remove to safe place. Do NOT wash away into sewer. Do NOT let this chemical enter the environment. Personal protection: complete protective clothing including self-contained breathing apparatus.	Fireproof. Separated from food and feedstuffs oxidants halogens	Do not transport with food and feedstuffs. Note: E F symbol T symbol R: 45-46-11-36/38-48/23/24/25-65 S: 53-45 UN Hazard Class: 3 UN Packing Group: II

SEE IMPORTANT INFORMATION ON BACK

ICSC: 0015

Prepared in the context of cooperation between the International Programme on Chemical Safety & the Commission of the European Communities (C) IPCS CEC 1994. No modifications to the International version have been made except to add the OSHA PELs, NIOSH RELs and NIOSH IDLH values

International Chemical Safety Cards

ICSC: 0015

BENZENE

I M P O R T A N T D A T A	**PHYSICAL STATE; APPEARANCE:** COLOURLESS LIQUID , WITH CHARACTERISTIC ODOUR. **PHYSICAL DANGERS:** The vapour is heavier than air and may travel along the ground; distant ignition possible. As a result of flow, agitation, etc., electrostatic charges can be generated. **CHEMICAL DANGERS:** Reacts violently with oxidants, nitric acid, sulfuric acid and halogens causing fire and explosion hazard. Attacks plastic and rubber. **OCCUPATIONAL EXPOSURE LIMITS:** TLV: 0.5 ppm as TWA 2.5 ppm as STEL (skin) A1 BEI (ACGIH 2004). MAK: H Carcinogen category: 1 Germ cell mutagen group: 3A (DFG 2004). OSHA PEL: 1910.1028 TWA 1 ppm ST 5 ppm See Appendix F NIOSH REL: Ca TWA 0.1 ppm ST 1 ppm See Appendix A NIOSH IDLH: Ca 500 ppm See: 71432	**ROUTES OF EXPOSURE:** The substance can be absorbed into the body by inhalation through the skin and by ingestion **INHALATION RISK:** A harmful contamination of the air can be reached very quickly on evaporation of this substance at 20°C. **EFFECTS OF SHORT-TERM EXPOSURE:** The substance is irritating to the eyes the skin and the respiratory tract Swallowing the liquid may cause aspiration into the lungs with the risk of chemical pneumonitis. The substance may cause effects on the central nervous system , resulting in lowering of consciousness Exposure far above the occupational exposure limit value may result in unconsciousness death **EFFECTS OF LONG-TERM OR REPEATED EXPOSURE:** The liquid defats the skin. The substance may have effects on the bone marrow immune system , resulting in a decrease of blood cells. This substance is carcinogenic to humans.
PHYSICAL PROPERTIES	Boiling point: 80°C Melting point: 6°C Relative density (water = 1): 0.88 Solubility in water, g/100 ml at 25°C: 0.18 Vapour pressure, kPa at 20°C: 10 Relative vapour density (air = 1): 2.7	Relative density of the vapour/air-mixture at 20°C (air = 1): 1.2 Flash point: -11°C c.c. Auto-ignition temperature: 498°C Explosive limits, vol% in air: 1.2-8.0 Octanol/water partition coefficient as log Pow:

2.13

ENVIRONMENTAL DATA	The substance is very toxic to aquatic organisms. 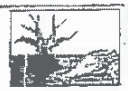

NOTES

Use of alcoholic beverages enhances the harmful effect. Depending on the degree of exposure, periodic medical examination is indicated. The odour warning when the exposure limit value is exceeded is insufficient.

Transport Emergency Card: TEC (R)-30S1114 / 30GF1-II
NFPA Code: H2; F3; R0

ADDITIONAL INFORMATION

ICSC: 0015 **BENZENE**

(C) IPCS, CEC, 1994

IMPORTANT LEGAL NOTICE: Neither NIOSH, the CEC or the IPCS nor any person acting on behalf of NIOSH, the CEC or the IPCS is responsible for the use which might be made of this information. This card contains the collective views of the IPCS Peer Review Committee and may not reflect in all cases all the detailed requirements included in national legislation on the subject. The user should verify compliance of the cards with the relevant legislation in the country of use. The only modifications made to produce the U.S. version is inclusion of the OSHA PELs, NIOSH RELs and NIOSH IDLH values.

International Chemical Safety Cards

ICSC: 0078

TOLUENE

UNEP

National Institute for Occupational Safety and Health NIOSH

Methylbenzene
Toluol
Phenylmethane
$C_6H_5CH_3$ / C_7H_8
Molecular mass: 92.1

ICSC # 0078
CAS # 108-88-3
RTECS # XS5250000
UN # 1294
EC # 601-021-00-3
October 10, 2002 Validated

TYPES OF HAZARD/ EXPOSURE	ACUTE HAZARDS/ SYMPTOMS	PREVENTION	FIRST AID/ FIRE FIGHTING
FIRE	Highly flammable.	NO open flames, NO sparks, and NO smoking.	Powder, AFFF, foam, carbon dioxide.
EXPLOSION	Vapour/air mixtures are explosive.	Closed system, ventilation, explosion-proof electrical equipment and lighting. Prevent build-up of electrostatic charges (e.g., by grounding). Do NOT use compressed air for filling, discharging, or handling. Use non-sparking handtools.	In case of fire: keep drums, etc., cool by spraying with water.
EXPOSURE		STRICT HYGIENE! AVOID EXPOSURE OF (PREGNANT) WOMEN!	
•INHALATION	Cough. Sore throat. Dizziness. Drowsiness. Headache. Nausea. Unconsciousness.	Ventilation, local exhaust, or breathing protection.	Fresh air, rest. Refer for medical attention.
•SKIN	Dry skin. Redness.	Protective gloves.	Remove contaminated clothes. Rinse and then wash skin with water and soap. Refer for medical attention.
•EYES	Redness. Pain.	Safety goggles.	First rinse with plenty of water for several minutes (remove contact lenses if easily possible), then take to a doctor.
•INGESTION	Burning sensation. Abdominal pain. (Further see Inhalation).	Do not eat, drink, or smoke during work.	Rinse mouth. Do NOT induce vomiting. Refer for medical attention.

SPILLAGE DISPOSAL	STORAGE	PACKAGING & LABELLING
Evacuate danger area in large spill! Consult an expert in large spill! Remove all ignition sources. Ventilation. Collect leaking liquid in sealable containers. Absorb remaining liquid in sand or inert absorbent and remove to safe place. Do NOT wash away into sewer. Do NOT let this chemical enter the environment. Personal protection: self-contained breathing apparatus	Fireproof. Separated from strong oxidants.	F symbol Xn symbol R: 11-38-48/20-63-65-67 S: 2-36/37-46-62 UN Hazard Class: 3 UN Packing Group: II

SEE IMPORTANT INFORMATION ON BACK

ICSC: 0078

Prepared in the context of cooperation between the International Programme on Chemical Safety & the Commission of the European Communities (C) IPCS CEC 1994 No modifications to the International version have been made except to add the OSHA PELs, NIOSH RELs and NIOSH IDLH values

International Chemical Safety Cards

TOLUENE

ICSC: 0078

I M P O R T A N T D A T A	**PHYSICAL STATE; APPEARANCE:** COLOURLESS LIQUID , WITH CHARACTERISTIC ODOUR. **PHYSICAL DANGERS:** The vapour mixes well with air, explosive mixtures are formed easily. As a result of flow, agitation, etc., electrostatic charges can be generated. **CHEMICAL DANGERS:** Reacts violently with strong oxidants causing fire and explosion hazard. **OCCUPATIONAL EXPOSURE LIMITS:** TLV: 50 ppm as TWA (skin) A4 BEI issued (ACGIH 2004). MAK: Pregnancy risk group: C (DFG 2004). EU OEL: 192 mg/m³ 50 ppm as TWA 384 mg/m³ 100 ppm as STEL (skin) (EU 2006). OSHA PEL†: TWA 200 ppm C 300 ppm 500 ppm (10-minute maximum peak) NIOSH REL: TWA 100 ppm (375 mg/m³) ST 150 ppm (560 mg/m³) NIOSH IDLH: 500 ppm See: 108883	**ROUTES OF EXPOSURE:** The substance can be absorbed into the body by inhalation, through the skin and by ingestion. **INHALATION RISK:** A harmful contamination of the air can be reached rather quickly on evaporation of this substance at 20°C. **EFFECTS OF SHORT-TERM EXPOSURE:** The substance is irritating to the eyes and the respiratory tract. The substance may cause effects on the central nervous system. If this liquid is swallowed, aspiration into the lungs may result in chemical pneumonitis. Exposure at high levels may result in cardiac dysrhythmia and unconsciousness. **EFFECTS OF LONG-TERM OR REPEATED EXPOSURE:** The liquid defats the skin. The substance may have effects on the central nervous system. Exposure to the substance may enhance hearing damage caused by exposure to noise. Animal tests show that this substance possibly causes toxicity to human reproduction or development.
PHYSICAL PROPERTIES	Boiling point: 111°C Melting point: -95°C Relative density (water = 1): 0.87 Solubility in water: none	Relative density of the vapour/air-mixture at 20°C (air = 1): 1.01 Flash point: 4°C c.c. Auto-ignition temperature: 480°C

	Vapour pressure, kPa at 25°C: 3.8 Relative vapour density (air = 1): 3.1	Explosive limits, vol% in air: 1.1-7.1 Octanol/water partition coefficient as log Pow: 2.69
ENVIRONMENTAL DATA	The substance is toxic to aquatic organisms.	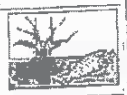

NOTES

Depending on the degree of exposure, periodic medical examination is suggested. Use of alcoholic beverages enhances the harmful effect. Card has been partly updated in October 2004: see sections Occupational Exposure Limits, EU classification, Emergency Response. Card has been partly updated in October 2006: see section Occupational Exposure Limits.

Transport Emergency Card: TEC (R)-30S1294
NFPA Code: H 2; F 3; R 0;

ADDITIONAL INFORMATION

ICSC: 0078 **TOLUENE**

(C) IPCS, CEC, 1994

IMPORTANT LEGAL NOTICE: Neither NIOSH, the CEC or the IPCS nor any person acting on behalf of NIOSH, the CEC or the IPCS is responsible for the use which might be made of this information. This card contains the collective views of the IPCS Peer Review Committee and may not reflect in all cases all the detailed requirements included in national legislation on the subject. The user should verify compliance of the cards with the relevant legislation in the country of use. The only modifications made to produce the U.S. version is inclusion of the OSHA PELs, NIOSH RELs and NIOSH IDLH values.

International Chemical Safety Cards

ETHYLBENZENE

ICSC: 0268

Ethylbenzol
Phenylethane
EB
$C_8H_{10}/C_6H_5C_2H_5$
Molecular mass: 106.2

ICSC # 0268
CAS # 100-41-4
RTECS # DA0700000
UN # 1175
EC # 601-023-00-4
November 23, 2007 Validated

TYPES OF HAZARD/ EXPOSURE	ACUTE HAZARDS/ SYMPTOMS	PREVENTION	FIRST AID/ FIRE FIGHTING
FIRE	Highly flammable.	NO open flames, NO sparks, and NO smoking.	Dry powder. Foam. Carbon dioxide.
EXPLOSION	Vapour/air mixtures are explosive.	Closed system, ventilation, explosion-proof electrical equipment and lighting. Do NOT use compressed air for filling, discharging or handling.	In case of fire: keep drums, etc., cool by spraying with water.
EXPOSURE		PREVENT GENERATION OF MISTS!	
•INHALATION	Cough. Sore throat. Dizziness. Drowsiness. Headache.	Ventilation, local exhaust, or breathing protection.	Fresh air, rest. Refer for medical attention.
•SKIN	Redness.	Protective gloves.	Remove contaminated clothes. Rinse and then wash skin with water and soap.
•EYES	Redness. Pain. crimation; deleted at update Nov 07 - only at very high levels.	Safety goggles	First rinse with plenty of water for several minutes (remove contact lenses if easily possible), then take to a doctor.
•INGESTION	Burning sensation in the throat and chest. (Further see inhalation).	Do not eat, drink, or smoke during work.	Rinse mouth. Do NOT induce vomiting. Refer for medical attention.

SPILLAGE DISPOSAL	STORAGE	PACKAGING & LABELLING
Personal protection: filter respirator for organic gases and vapours adapted to the airborne concentration of the substance. Ventilation. Collect leaking	Fireproof. Separated from strong oxidants. Provision to contain effluent from fire extinguishing. Store in an area without drain or sewer access.	F symbol Xn symbol R: 11-20

liquid in covered containers. Absorb remaining liquid in sand or inert absorbent and remove to safe place. Do NOT wash away into sewer Do NOT let this chemical enter the environment.		S: 2-16-24/25-29 UN Hazard Class: 3 UN Packing Group: II Signal: Danger Flame-Excl mark-Health haz Highly flammable liquid and vapour May be harmful if swallowed Harmful if inhaled vapour Causes mild skin irritation Causes eye irritation Suspected of causing cancer May cause respiratory irritation May cause drowsiness or dizziness May be harmful if swallowed and enters airways Toxic to aquatic life

SEE IMPORTANT INFORMATION ON BACK

ICSC: 0268

Prepared in the context of cooperation between the International Programme on Chemical Safety & the Commission of the European Communities (C) IPCS CEC 1994. No modifications to the International version have been made except to add the OSHA PELs, NIOSH RELs and NIOSH IDLH values.

International Chemical Safety Cards

ICSC: 0268

ETHYLBENZENE

I M P O R T A N T D A T A	**PHYSICAL STATE: APPEARANCE:** COLOURLESS LIQUID , WITH AROMATIC ODOUR. **PHYSICAL DANGERS:** The vapour mixes well with air, explosive mixtures are easily formed. **CHEMICAL DANGERS:** Reacts with strong oxidants. Attacks plastic and rubber. **OCCUPATIONAL EXPOSURE LIMITS:** TLV: 100 ppm as TWA 125 ppm as STEL A3 (confirmed animal carcinogen with unknown relevance to humans); BEI issued (ACGIH 2007). EU OEL: 442 mg/m³ 100 ppm as TWA 884 mg/m³ 200 ppm as STEL (skin) (EU 2006). OSHA PEL†: TWA 100 ppm (435 mg/m³) NIOSH REL: TWA 100 ppm (435 mg/m³) ST 125 ppm (545 mg/m³) NIOSH IDLH: 800 ppm 10%LEL See: 100414	**ROUTES OF EXPOSURE:** The substance can be absorbed into the body by inhalation of its vapour, and by ingestion. **INHALATION RISK:** A harmful contamination of the air will be reached rather slowly on evaporation of this substance at 20°C. **EFFECTS OF SHORT-TERM EXPOSURE:** The substance is irritating to the eyes the skin and the respiratory tract Swallowing the liquid may cause aspiration into the lungs with the risk of chemical pneumonitis. The substance may cause effects on the central nervous system. Exposure above the OEL could cause lowering of consciousness. **EFFECTS OF LONG-TERM OR REPEATED EXPOSURE:** This substance is possibly carcinogenic to humans. The substance may have effects on the kidneys and liver , resulting in impaired functions Repeated contact with skin may cause dryness and cracking.
PHYSICAL PROPERTIES	Boiling point: 136°C Melting point: -95°C Relative density (water = 1): 0.9	Relative density of the vapour/air-mixture at 20°C (air = 1): 1.02 Flash point: 18°C c.c.

	Solubility in water, g/100 ml at 20°C: 0.015 Vapour pressure, kPa at 20°C: 0.9 Relative vapour density (air = 1): 3.7	Auto-ignition temperature: 432°C Explosive limits, vol% in air: 1.0-6.7 Octanol/water partition coefficient as log Pow: 3.1 Viscosity, mm^2/s at 25 °C: 0.6
ENVIRONMENTAL DATA	The substance is toxic to aquatic organisms. It is strongly advised that this substance does not enter the environment.	

NOTES

The odour warning when the exposure limit value is exceeded is insufficient.

Transport Emergency Card: TEC (R)-305 1135 or 30GF1- I+II
NFPA Code: H2; F3; R0

ADDITIONAL INFORMATION

ICSC: 0268 **ETHYLBENZENE**

(C) IPCS, CEC, 1994

IMPORTANT LEGAL NOTICE: Neither NIOSH, the CEC or the IPCS nor any person acting on behalf of NIOSH, the CEC or the IPCS is responsible for the use which might be made of this information. This card contains the collective views of the IPCS Peer Review Committee and may not reflect in all cases all the detailed requirements included in national legislation on the subject. The user should verify compliance of the cards with the relevant legislation in the country of use. The only modifications made to produce the U.S. version is inclusion of the OSHA PELs, NIOSH RELs and NIOSH IDLH values.

International Chemical Safety Cards

ICSC: 0086

p-XYLENE

UNEP

National Institute for Occupational Safety and Health NIOSH

para-Xylene
1,4-Dimethylbenzene
p-Xylol
$C_6H_4(CH_3)_2$ / C_8H_{10}
Molecular mass: 106.2

ICSC # 0086
CAS # 106-42-3
RTECS # ZE2625000
UN # 1307
EC # 601-022-00-9
August 03, 2002 Validated

TYPES OF HAZARD/ EXPOSURE	ACUTE HAZARDS/ SYMPTOMS	PREVENTION	FIRST AID/ FIRE FIGHTING
FIRE	Flammable.	NO open flames, NO sparks, and NO smoking.	Powder, water spray, foam, carbon dioxide.
EXPLOSION	Above 27°C explosive vapour/air mixtures may be formed.	Above 27°C use a closed system, ventilation, and explosion-proof electrical equipment. Prevent build-up of electrostatic charges (e.g., by grounding).	In case of fire: keep drums, etc., cool by spraying with water.
EXPOSURE		STRICT HYGIENE! AVOID EXPOSURE OF (PREGNANT) WOMEN!	
•INHALATION	Dizziness. Drowsiness. Headache. Nausea.	Ventilation, local exhaust, or breathing protection.	Fresh air, rest. Refer for medical attention.
•SKIN	Dry skin. Redness.	Protective gloves.	Remove contaminated clothes. Rinse and then wash skin with water and soap.
•EYES	Redness. Pain.	Safety spectacles.	First rinse with plenty of water for several minutes (remove contact lenses if easily possible), then take to a doctor.
•INGESTION	Burning sensation. Abdominal pain. (Further see Inhalation).	Do not eat, drink, or smoke during work.	Rinse mouth. Do NOT induce vomiting. Refer for medical attention.

SPILLAGE DISPOSAL	STORAGE	PACKAGING & LABELLING
Ventilation. Remove all ignition sources. Collect leaking and spilled liquid in sealable containers as far as	Fireproof. Separated from strong oxidants and strong acids	Note: C Xn symbol

possible. Absorb remaining liquid in sand or inert absorbent and remove to safe place. Do NOT let this chemical enter the environment. (Extra personal protection: filter respirator for organic gases and vapours.)	R: 10-20/21-38 S: 2-25 UN Hazard Class: 3 UN Packing Group: III

SEE IMPORTANT INFORMATION ON BACK

ICSC: 0086

Prepared in the context of cooperation between the International Programme on Chemical Safety & the Commission of the European Communities (C) IPCS CEC 1994 No modifications to the International version have been made except to add the OSHA PELs, NIOSH RELs and NIOSH IDLH values

International Chemical Safety Cards

p-XYLENE

ICSC: 0086

I M P O R T A N T D A T A	**PHYSICAL STATE; APPEARANCE:** COLOURLESS LIQUID , WITH CHARACTERISTIC ODOUR. **PHYSICAL DANGERS:** As a result of flow, agitation, etc., electrostatic charges can be generated. **CHEMICAL DANGERS:** Reacts with strong acids strong oxidants **OCCUPATIONAL EXPOSURE LIMITS:** TLV: 100 ppm as TWA 150 ppm as STEL A4 (ACGIH 2001). BEI (ACGIH 2001). EU OEL: 50 ppm as TWA 100 ppm as STEL (skin) (EU 2000). OSHA PEL†: TWA 100 ppm (435 mg/m^3) NIOSH REL: TWA 100 ppm (435 mg/m^3) ST 150 ppm (655 mg/m^3) NIOSH IDLH: 900 ppm See: 95476	**ROUTES OF EXPOSURE:** The substance can be absorbed into the body by inhalation, through the skin and by ingestion. **INHALATION RISK:** A harmful contamination of the air will be reached rather slowly on evaporation of this substance at 20°C. **EFFECTS OF SHORT-TERM EXPOSURE:** The substance is irritating to the eyes and the skin The substance may cause effects on the central nervous system If this liquid is swallowed, aspiration into the lungs may result in chemical pneumonitis. **EFFECTS OF LONG-TERM OR REPEATED EXPOSURE:** The liquid defats the skin. The substance may have effects on the central nervous system. Animal tests show that this substance possibly causes toxicity to human reproduction or development.
PHYSICAL PROPERTIES	Boiling point: 138°C Melting point: 13°C Relative density (water = 1): 0.86 Solubility in water: none Vapour pressure, kPa at 20°C: 0.9	Relative vapour density (air = 1): 3.7 Relative density of the vapour/air-mixture at 20°C (air = 1): 1.02 Flash point: 27°C c.c. Auto-ignition temperature: 528°C Explosive limits, vol% in air: 1.1-7.0 Octanol/water partition coefficient as log Pow: 3.15
ENVIRONMENTAL DATA	The substance is toxic to aquatic organisms.	

NOTES

Depending on the degree of exposure, periodic medical examination is indicated. The recommendations on this Card also apply to technical xylene. See ICSC 0084 o-Xylene and 0085 m-Xylene.

Transport Emergency Card: TEC (R)-30S1307-III
NFPA Code: H 2; F 3; R 0;

Card has been partially updated in January 2008: see Occupational Exposure Limits.

ADDITIONAL INFORMATION

ICSC: 0086 **p-XYLENE**

(C) IPCS, CEC, 1994

IMPORTANT LEGAL NOTICE: Neither NIOSH, the CEC or the IPCS nor any person acting on behalf of NIOSH, the CEC or the IPCS is responsible for the use which might be made of this information. This card contains the collective views of the IPCS Peer Review Committee and may not reflect in all cases all the detailed requirements included in national legislation on the subject. The user should verify compliance of the cards with the relevant legislation in the country of use. The only modifications made to produce the U.S. version is inclusion of the OSHA PELs, NIOSH RELs and NIOSH IDLH values.

International Chemical Safety Cards

NAPHTHALENE

ICSC: 0667

Naphthene
$C_{10}H_8$
Molecular mass: 128.18

ICSC # 0667
CAS # 91-20-3
RTECS # QJ0525000
UN # 1334 (solid); 2304 (molten)
EC # 601-052-00-2
April 21, 2005 Validated

TYPES OF HAZARD/ EXPOSURE	ACUTE HAZARDS/ SYMPTOMS	PREVENTION	FIRST AID/ FIRE FIGHTING
FIRE	Combustible.	NO open flames.	Powder, water spray, foam, carbon dioxide.
EXPLOSION	Above 80°C explosive vapour/air mixtures may be formed. Finely dispersed particles form explosive mixtures in air.	Prevent deposition of dust; closed system, dust explosion-proof electrical equipment and lighting.	
EXPOSURE		PREVENT DISPERSION OF DUST!	
•INHALATION	Headache. Weakness. Nausea. Vomiting. Sweating. Confusion. Jaundice. Dark urine.	Ventilation (not if powder), local exhaust, or breathing protection.	Fresh air, rest. Refer for medical attention.
•SKIN	MAY BE ABSORBED! (Further see Inhalation).	Protective gloves.	Rinse skin with plenty of water or shower.
•EYES		Safety spectacles.	First rinse with plenty of water for several minutes (remove contact lenses if easily possible), then take to a doctor.
•INGESTION	Abdominal pain. Diarrhoea. Convulsions. Unconsciousness. (Further see Inhalation).	Do not eat, drink, or smoke during work. Wash hands before eating.	Rest. Refer for medical attention.

SPILLAGE DISPOSAL	STORAGE	PACKAGING & LABELLING
Personal protection: filter respirator for organic gases and vapours. Do NOT let this chemical enter the environment. Sweep spilled substance into covered containers; if appropriate, moisten first to prevent dusting. Carefully collect remainder, then remove to safe place.	Separated from strong oxidants, food and feedstuffs. Store in an area without drain or sewer access.	Do not transport with food and feedstuffs. Marine pollutant. Xn symbol N symbol R: 22-40-50/53 S: 2-36/37-46-60-61

UN Hazard Class: 4.1
UN Packing Group: III

SEE IMPORTANT INFORMATION ON BACK

ICSC: 0667

Prepared in the context of cooperation between the International Programme on Chemical Safety & the Commission of the European Communities (C) IPCS CEC 1994 No modifications to the International version have been made except to add the OSHA PELs, NIOSH RELs and NIOSH IDLH values

International Chemical Safety Cards

NAPHTHALENE

ICSC: 0667

I M P O R T A N T D A T A	**PHYSICAL STATE; APPEARANCE:** WHITE SOLID IN VARIOUS FORMS , WITH CHARACTERISTIC ODOUR. **PHYSICAL DANGERS:** Dust explosion possible if in powder or granular form, mixed with air. **CHEMICAL DANGERS:** On combustion, forms irritating and toxic gases. Reacts with strong oxidants **OCCUPATIONAL EXPOSURE LIMITS:** TLV: 10 ppm as TWA 15 ppm as STEL (skin) A4 (not classifiable as a human carcinogen); (ACGIH 2005). MAK: skin absorption (H); Carcinogen category: 2; Germ cell mutagen group: 3B; (DFG 2004). OSHA PEL†: TWA 10 ppm (50 mg/m^3) NIOSH REL: TWA 10 ppm (50 mg/m^3) ST 15 ppm (75 mg/m^3) NIOSH IDLH: 250 ppm See: 91203	**ROUTES OF EXPOSURE:** The substance can be absorbed into the body by inhalation, through the skin and by ingestion. **INHALATION RISK:** A harmful contamination of the air will be reached rather slowly on evaporation of this substance at 20°C. See Notes. **EFFECTS OF SHORT-TERM EXPOSURE:** The substance may cause effects on the blood , resulting in lesions of blood cells (haemolysis) See Notes. The effects may be delayed. Exposure by ingestion may result in death. Medical observation is indicated. **EFFECTS OF LONG-TERM OR REPEATED EXPOSURE:** The substance may have effects on the blood , resulting in chronic haemolytic anaemia. The substance may have effects on the eyes , resulting in the development of cataract. This substance is possibly carcinogenic to humans.
PHYSICAL PROPERTIES	Boiling point: 218°C Sublimation slowly at room temperature Melting point: 80°C Density: 1.16 g/cm^3 Solubility in water, g/100 ml at 25°C: none	Vapour pressure, Pa at 25°C: 11 Relative vapour density (air = 1): 4.42 Flash point: 80°C c.c. Auto-ignition temperature: 540°C Explosive limits, vol% in air: 0.9-5.9 Octanol/water partition coefficient as log Pow: 3.3
ENVIRONMENTAL DATA	The substance is very toxic to aquatic organisms. The substance may cause long-term effects in the aquatic environment.	

NOTES

Some individuals may be more sensitive to the effect of naphthalene on blood cells.

Transport Emergency Card: TEC (R)-41S1334 (solid); 41GF 1 -II+III (solid); 4 1 S2304 (molten)
NFPA Code: H2; F2; R0;

ADDITIONAL INFORMATION	
ICSC: 0667	NAPHTHALENE

(C) IPCS, CEC, 1994

IMPORTANT LEGAL NOTICE:	Neither NIOSH, the CEC or the IPCS nor any person acting on behalf of NIOSH, the CEC or the IPCS is responsible for the use which might be made of this information. This card contains the collective views of the IPCS Peer Review Committee and may not reflect in all cases all the detailed requirements included in national legislation on the subject. The user should verify compliance of the cards with the relevant legislation in the country of use. The only modifications made to produce the U.S. version is inclusion of the OSHA PELs, NIOSH RELs and NIOSH IDLH values.

International Chemical Safety Cards

ACENAPHTHENE

ICSC: 1674

UNEP

National Institute for Occupational Safety and Health NIOSH

1,2-Dihydroacenaphthylene
1,8-Ethylenenaphthalene
$C_{12}H_{10}$
Molecular mass: 154.2

ICSC # 1674
CAS # 83-32-9
RTECS # AB1000000
UN # 3077
October 12, 2006 Validated

TYPES OF HAZARD/ EXPOSURE	ACUTE HAZARDS/ SYMPTOMS	PREVENTION	FIRST AID/ FIRE FIGHTING
FIRE	Combustible.	NO open flames.	Water spray. Dry powder. Foam. Carbon dioxide.
EXPLOSION	Finely dispersed particles form explosive mixtures in air.	Prevent deposition of dust; closed system, dust explosion-proof electrical equipment and lighting.	
EXPOSURE	See NOTES.	PREVENT DISPERSION OF DUST!	
•INHALATION		Local exhaust or breathing protection.	Fresh air, rest.
•SKIN		Protective gloves.	Remove contaminated clothes. Rinse and then wash skin with water and soap.
•EYES		Safety goggles	First rinse with plenty of water for several minutes (remove contact lenses if easily possible), then take to a doctor.
•INGESTION		Do not eat, drink, or smoke during work.	Rinse mouth.

SPILLAGE DISPOSAL	STORAGE	PACKAGING & LABELLING
Personal protection: P2 filter respirator for harmful particles. Do NOT let this chemical enter the environment. Sweep spilled substance into covered containers; if appropriate, moisten first to prevent dusting. Carefully collect remainder, then remove to safe place.	Separated from strong oxidants Provision to contain effluent from fire extinguishing. Store in an area without drain or sewer access.	UN Hazard Class: 9 UN Packing Group: III Signal: Warning Enviro Very toxic to aquatic life with long lasting effects

SEE IMPORTANT INFORMATION ON BACK

ICSC: 1674

Prepared in the context of cooperation between the International Programme on Chemical Safety & the Commission of the European Communities (C) IPCS CEC 1994 No modifications to the International version have been made except to add the OSHA PELs, NIOSH RELs and NIOSH IDLH values

International Chemical Safety Cards

ACENAPHTHENE

ICSC: 1674

I M P O R T A N T D A T A	**PHYSICAL STATE; APPEARANCE:** WHITE TO BEIGE CRYSTALS **PHYSICAL DANGERS:** Dust explosion possible if in powder or granular form, mixed with air. **CHEMICAL DANGERS:** On combustion, forms toxic gases including carbon monoxide. Reacts with strong oxidants **OCCUPATIONAL EXPOSURE LIMITS:** TLV not established. MAK not established.	**ROUTES OF EXPOSURE:** The substance can be absorbed into the body by inhalation of its aerosol, through the skin and by ingestion. **INHALATION RISK:** A harmful concentration of airborne particles can be reached quickly when dispersed **EFFECTS OF SHORT-TERM EXPOSURE:** **EFFECTS OF LONG-TERM OR REPEATED EXPOSURE:** See Notes.
PHYSICAL PROPERTIES	Boiling point: 279°C Melting point: 95°C Density: 1.2 g/cm³ Solubility in water, g/100 ml at 25°C: 0.0004	Vapour pressure, Pa at 25°C: 0.3 Relative vapour density (air = 1): 5.3 Flash point: 135°C o.c. Auto-ignition temperature: >450 °C Octanol/water partition coefficient as log Pow: 3.9 - 4.5
ENVIRONMENTAL DATA	The substance is very toxic to aquatic organisms. The substance may cause long-term effects in the aquatic environment. It is strongly advised that this substance does not enter the environment.	

NOTES

Acenaphthene occurs as a pure substance and also as a component of polyaromatic hydrocarbon (PAH) mixtures. Human population studies have associated PAH's exposure with cancer and cardiovascular diseases. Insufficient data are available on the effect of this substance on human health, therefore utmost care must be taken.

Transport Emergency Card: TEC (R)-90GM7-III

ADDITIONAL INFORMATION

ICSC: 1674	ACENAPHTHENE
	(C) IPCS, CEC, 1994

IMPORTANT LEGAL NOTICE:	Neither NIOSH, the CEC or the IPCS nor any person acting on behalf of NIOSH, the CEC or the IPCS is responsible for the use which might be made of this information. This card contains the collective views of the IPCS Peer Review Committee and may not reflect in all cases all the detailed requirements included in national legislation on the subject. The user should verify compliance of the cards with the relevant legislation in the country of use. The only modifications made to produce the U.S. version is inclusion of the OSHA PELs, NIOSH RELs and NIOSH IDLH values.

International Chemical Safety Cards

ANTHRACENE

ICSC: 0825

Anthracin
Paranaphthalene
$C_{14}H_{10}$ / $(C_6H_4CH)_2$
Molecular mass: 178.2

ICSC # 0825
CAS # 120-12-7
RTECS # CA9350000
March 24. 1999 Validated

TYPES OF HAZARD/ EXPOSURE	ACUTE HAZARDS/ SYMPTOMS	PREVENTION	FIRST AID/ FIRE FIGHTING
FIRE	Combustible.	NO open flames.	Powder, water spray, foam, carbon dioxide.
EXPLOSION	Finely dispersed particles form explosive mixtures in air.	Prevent deposition of dust; closed system, dust explosion-proof electrical equipment and lighting.	In case of fire: keep drums, etc., cool by spraying with water.
EXPOSURE		PREVENT DISPERSION OF DUST!	
•INHALATION	Cough. Sore throat.	Ventilation (not if powder), local exhaust, or breathing protection.	Fresh air, rest. Refer for medical attention.
•SKIN	Redness.	Protective gloves.	Remove contaminated clothes. Rinse and then wash skin with water and soap.
•EYES	Redness. Pain.	Safety spectacles, face shield, or eye protection in combination with breathing protection if powder.	First rinse with plenty of water for several minutes (remove contact lenses if easily possible), then take to a doctor.
•INGESTION	Abdominal pain.	Do not eat, drink, or smoke during work.	Rinse mouth. Rest. Refer for medical attention.

SPILLAGE DISPOSAL	STORAGE	PACKAGING & LABELLING
Sweep spilled substance into containers. Carefully collect remainder, then remove to safe place. Do NOT let this chemical enter the environment. (Extra personal protection: P2 filter respirator for harmful particles).	Separated from strong oxidants. Well closed.	

SEE IMPORTANT INFORMATION ON BACK

ICSC: 0825

Prepared in the context of cooperation between the International Programme on Chemical Safety & the Commission of the European Communities (C) IPCS CEC 1994. No modifications to the International version have been made except to add the OSHA PELs, NIOSH RELs and NIOSH IDLH values

International Chemical Safety Cards

ANTHRACENE

ICSC: 0825

IMPORTANT DATA

PHYSICAL STATE; APPEARANCE:
WHITE CRYSTALS OR FLAKES.

PHYSICAL DANGERS:
Dust explosion possible if in powder or granular form, mixed with air.

CHEMICAL DANGERS:
The substance decomposes on heating, under influence of strong oxidants producing acrid, toxic fume , causing fire and explosion hazard.

OCCUPATIONAL EXPOSURE LIMITS:
TLV not established.

ROUTES OF EXPOSURE:
The substance can be absorbed into the body by inhalation.

INHALATION RISK:
Evaporation at 20°C is negligible; a harmful concentration of airborne particles can, however, be reached quickly.

EFFECTS OF SHORT-TERM EXPOSURE:
The substance slightly irritates the skin and the respiratory tract.

EFFECTS OF LONG-TERM OR REPEATED EXPOSURE:
Repeated or prolonged contact with skin may cause dermatitis under the influence of UV light.

PHYSICAL PROPERTIES

Boiling point: 342°C
Melting point: 218°C
Density: 1.25-1.28 g/cm³
Solubility in water, g/100 ml at 20 °C: 0.00013
Vapour pressure, Pa at 25°C: 0.08

Relative vapour density (air = 1): 6.15
Flash point: 121°C
Auto-ignition temperature: 538°C
Explosive limits, vol% in air: 0.6-?
Octanol/water partition coefficient as log Pow: 4.5 (calculated)

ENVIRONMENTAL DATA

The substance is very toxic to aquatic organisms. The substance may cause long-term effects in the aquatic environment.

NOTES

Green oil, Tetra-olive N2G are trade names.

NFPA Code: H0; F1; R;

ADDITIONAL INFORMATION

ICSC: 0825 ANTHRACENE

(C) IPCS, CEC, 1994

IMPORTANT LEGAL NOTICE:

Neither NIOSH, the CEC or the IPCS nor any person acting on behalf of NIOSH, the CEC or the IPCS is responsible for the use which might be made of this information. This card contains the collective views of the IPCS Peer Review Committee and may not reflect in all cases all the detailed requirements included in national legislation on the subject. The user should verify compliance of the cards with the

relevant legislation in the country of use. The only modifications made to produce the U.S. version is inclusion of the OSHA PELs, NIOSH RELs and NIOSH IDLH values.

International Chemical Safety Cards

PYRENE

ICSC: 1474

Benzo (d,e,f) phenanthrene
beta-Pyrene
$C_{16}H_{10}$
Molecular mass: 202.26

ICSC # 1474
CAS # 129-00-0
RTECS # UR2450000
November 27, 2003 Validated

TYPES OF HAZARD/ EXPOSURE	ACUTE HAZARDS/ SYMPTOMS	PREVENTION	FIRST AID/ FIRE FIGHTING
FIRE	Gives off irritating or toxic fumes (or gases) in a fire.	NO open flames, NO sparks, and NO smoking.	Water spray, carbon dioxide, dry powder, alcohol-resistant foam, foam.
EXPLOSION			
EXPOSURE			
•INHALATION		Avoid inhalation of dust	Fresh air, rest.
•SKIN	Redness.	Protective gloves.	Remove contaminated clothes. Rinse and then wash skin with water and soap.
•EYES	Redness.	Safety spectacles.	First rinse with plenty of water for several minutes (remove contact lenses if easily possible), then take to a doctor.
•INGESTION		Do not eat, drink, or smoke during work.	Do NOT induce vomiting. Give plenty of water to drink. Refer for medical attention.

SPILLAGE DISPOSAL	STORAGE	PACKAGING & LABELLING
Sweep spilled substance into containers; if appropriate, moisten first to prevent dusting. Carefully collect remainder. Do NOT let this chemical enter the environment. (Extra personal protection: P2 filter respirator for harmful particles.)	Separated from strong oxidants. Keep in a well-ventilated room.	Do not transport with food and feedstuffs.

SEE IMPORTANT INFORMATION ON BACK

ICSC: 1474 Prepared in the context of cooperation between the International Programme on Chemical Safety & the Commission of the European Communities (C) IPCS CEC 1994 No modifications to the International version have been made except to add the OSHA PELs, NIOSH RELs and NIOSH IDLH values.

International Chemical Safety Cards

PYRENE

ICSC: 1474

IMPORTANT DATA	**PHYSICAL STATE; APPEARANCE:** YELLOW COLOURLESS SOLID IN VARIOUS FORMS **PHYSICAL DANGERS:** **CHEMICAL DANGERS:** The substance decomposes on heating producing irritating fumes **OCCUPATIONAL EXPOSURE LIMITS:** TLV not established. MAK not established.	**ROUTES OF EXPOSURE:** The substance can be absorbed into the body by inhalation through the skin and by ingestion **INHALATION RISK:** Evaporation at 20°C is negligible; a harmful concentration of airborne particles can, however, be reached quickly when dispersed. **EFFECTS OF SHORT-TERM EXPOSURE:** Exposure to sun may provoke an irritating effect of pyrene on skin and lead to chronic skin discoloration. **EFFECTS OF LONG-TERM OR REPEATED EXPOSURE:**
PHYSICAL PROPERTIES	Boiling point: 404°C Melting point: 151°C Density: 1.27 g/cm³	Solubility in water: 0.135 mg/l at 25°C Vapour pressure, Pa at °C: 0.08 Octanol/water partition coefficient as log Pow: 4.88
ENVIRONMENTAL DATA	Bioaccumulation of this chemical may occur in crustacea, in fish, in milk, in algae and in molluscs. It is strongly advised that this substance does not enter the environment.	

NOTES

Pyrene is one of many polycyclic aromatic hydrocarbons - standards are usually established for them as mixtures, e.g., coal tar pitch volatiles. However, pyrene may be encountered as a laboratory chemical in its pure form. Health effects of exposure to the substance have not been investigated adequately. See ICSC 1415 Coal-tar pitch.

ADDITIONAL INFORMATION

ICSC: 1474 PYRENE

(C) IPCS, CEC, 1994

IMPORTANT LEGAL NOTICE: Neither NIOSH, the CEC or the IPCS nor any person acting on behalf of NIOSH, the CEC or the IPCS is responsible for the use which might be made of this information. This card contains the collective views of the IPCS Peer Review Committee and may not reflect in all cases all the detailed requirements included in national legislation on the subject. The user should verify compliance of the cards with the

relevant legislation in the country of use. The only modifications made to produce the U.S. version is inclusion of the OSHA PELs, NIOSH RELs and NIOSH IDLH values.

International Chemical Safety Cards

CHRYSENE

ICSC: 1672

UNEP

NIOSH National Institute for Occupational Safety and Health

Benzoaphenanthrene
1,2-Benzophenanthrene
1,2,5,6-Dibenzonaphthalene
$C_{18}H_{12}$
Molecular mass: 228.3

ICSC # 1672
CAS # 218-01-9
RTECS # GC0700000
UN # 3077
EC # 601-048-00-0
October 12, 2006 Validated

TYPES OF HAZARD/ EXPOSURE	ACUTE HAZARDS/ SYMPTOMS	PREVENTION	FIRST AID/ FIRE FIGHTING
FIRE	Combustible.	NO open flames.	Water spray. Dry powder. Foam. Carbon dioxide.
EXPLOSION	Finely dispersed particles form explosive mixtures in air.	Prevent deposition of dust; closed system, dust explosion-proof electrical equipment and lighting.	
EXPOSURE	See EFFECTS OF LONG-TERM OR REPEATED EXPOSURE.	AVOID ALL CONTACT!	
•INHALATION		Local exhaust or breathing protection.	Fresh air, rest.
•SKIN		Protective gloves. Protective clothing.	Remove contaminated clothes. Rinse and then wash skin with water and soap.
•EYES		Safety goggles	First rinse with plenty of water for several minutes (remove contact lenses if easily possible), then take to a doctor.
•INGESTION		Do not eat, drink, or smoke during work.	Rinse mouth.

SPILLAGE DISPOSAL	STORAGE	PACKAGING & LABELLING
Personal protection: P3 filter respirator for toxic particles. Do NOT let this chemical enter the environment. Sweep spilled substance into sealable containers; if appropriate, moisten first to prevent dusting. Carefully collect remainder, then remove to safe place.	Separated from strong oxidants. Provision to contain effluent from fire extinguishing. Store in an area without drain or sewer access.	T symbol N symbol R: 45-68-50/53 S: 53-45-60-61 UN Hazard Class: 9 UN Packing Group: III

		Signal: Warning Health haz-Enviro Suspected of causing cancer Very toxic to aquatic life Toxic to aquatic life with long lasting effects

SEE IMPORTANT INFORMATION ON BACK

ICSC: 1672

Prepared in the context of cooperation between the International Programme on Chemical Safety & the Commission of the European Communities (C) IPCS CEC 1994. No modifications to the International version have been made except to add the OSHA PELs, NIOSH RELs and NIOSH IDLH values

International Chemical Safety Cards

ICSC: 1672

CHRYSENE

I M P O R T A N T D A T A	**PHYSICAL STATE; APPEARANCE:** COLOURLESS TO BEIGE CRYSTALS OR POWDER **PHYSICAL DANGERS:** Dust explosion possible if in powder or granular form, mixed with air. **CHEMICAL DANGERS:** The substance decomposes on burning producing toxic fumes Reacts violently with strong oxidants. **OCCUPATIONAL EXPOSURE LIMITS:** TLV: A3 (confirmed animal carcinogen with unknown relevance to humans); (ACGIH 2006). MAK: skin absorption (H); Carcinogen category: 2 (DFG 2007).	**ROUTES OF EXPOSURE:** The substance can be absorbed into the body by inhalation of its aerosol, through the skin and by ingestion. **INHALATION RISK:** A harmful concentration of airborne particles can be reached quickly when dispersed **EFFECTS OF SHORT-TERM EXPOSURE:** **EFFECTS OF LONG-TERM OR REPEATED EXPOSURE:** This substance is possibly carcinogenic to humans.
PHYSICAL PROPERTIES	Boiling point: 448°C Melting point: 254 - 256°C Density: 1.3 g/cm³	Solubility in water: very poor Octanol/water partition coefficient as log Pow: 5.9
ENVIRONMENTAL DATA	The substance is very toxic to aquatic organisms. Bioaccumulation of this chemical may occur in seafood. It is strongly advised that this substance does not enter the environment.	

NOTES

Depending on the degree of exposure, periodic medical examination is suggested. Do NOT take working clothes home. This substance does not usually occur as a pure substance but as a component of polyaromatic hydrocarbon (PAH) mixtures. Human population studies have associated PAH's exposure with cancer and cardiovascular diseases.

Transport Emergency Card: TEC (R)-90GM7-III
Card has been partially updated in January 2008: see Occupational Exposure Limits.

ADDITIONAL INFORMATION

ICSC: 1672 **CHRYSENE**

(C) IPCS, CEC, 1994

IMPORTANT LEGAL NOTICE: Neither NIOSH, the CEC or the IPCS nor any person acting on behalf of NIOSH, the CEC or the IPCS is responsible for the use which might be made of this information. This card contains the collective views of the IPCS Peer Review Committee and may not reflect in all cases all the detailed requirements included in national legislation on the subject. The user should verify compliance of the cards with the relevant legislation in the country of use. The only modifications made to produce the U.S. version is inclusion of the OSHA PELs, NIOSH RELs and NIOSH IDLH values.

International Chemical Safety Cards

ICSC: 0720

BENZO(b)FLUORANTHENE

UNEP

National Institute for Occupational Safety and Health NIOSH

Benz(e)acephenanthrylene
2,3-Benzofluoroanthene
Benzo(e)fluoranthene
3,4-Benzofluoranthene
$C_{20}H_{12}$
Molecular mass: 252.3

ICSC # 0720
CAS # 205-99-2
RTECS # CU1400000
EC # 601-034-00-4
March 25, 1999 Validated

TYPES OF HAZARD/ EXPOSURE	ACUTE HAZARDS/ SYMPTOMS	PREVENTION	FIRST AID/ FIRE FIGHTING
FIRE			In case of fire in the surroundings: use appropriate extinguishing media.
EXPLOSION			
EXPOSURE		AVOID ALL CONTACT!	
•INHALATION		Local exhaust or breathing protection.	Fresh air, rest.
•SKIN		Protective gloves. Protective clothing.	Remove contaminated clothes. Rinse and then wash skin with water and soap.
•EYES		Safety spectacles or eye protection in combination with breathing protection.	First rinse with plenty of water for several minutes (remove contact lenses if easily possible). Then take to a doctor.
•INGESTION		Do not eat, drink, or smoke during work.	Rinse mouth. Refer for medical attention.

SPILLAGE DISPOSAL	STORAGE	PACKAGING & LABELLING
Sweep spilled substance into covered containers. if appropriate, moisten first to prevent dusting. Carefully collect remainder, then remove to safe place. Do NOT let this chemical enter the environment.	Provision to contain effluent from fire extinguishing. Well closed.	T symbol N symbol R: 45-50/53 S: 53-45-60-61

SEE IMPORTANT INFORMATION ON BACK

ICSC: 0720

Prepared in the context of cooperation between the International Programme on Chemical Safety & the Commission of the European Communities (C) IPCS CEC 1994. No modifications to the International version have been made except to add the OSHA PELs, NIOSH RELs and NIOSH IDLH values

International Chemical Safety Cards

BENZO(b)FLUORANTHENE

ICSC: 0720

IMPORTANT DATA	**PHYSICAL STATE; APPEARANCE:** COLOURLESS CRYSTALS **PHYSICAL DANGERS:** **CHEMICAL DANGERS:** Upon heating, toxic fumes are formed. **OCCUPATIONAL EXPOSURE LIMITS:** TLV: A2 (suspected human carcinogen); (ACGIH 2004). MAK: Carcinogen category: 2; (DFG 2004).	**ROUTES OF EXPOSURE:** The substance can be absorbed into the body by inhalation of its aerosol and through the skin. **INHALATION RISK:** Evaporation at 20°C is negligible; a harmful concentration of airborne particles can, however, be reached quickly. **EFFECTS OF SHORT-TERM EXPOSURE:** **EFFECTS OF LONG-TERM OR REPEATED EXPOSURE:** This substance is possibly carcinogenic to humans. May cause genetic damage in humans.
PHYSICAL PROPERTIES	Boiling point: 481°C Melting point: 168°C Solubility in water: none	Octanol/water partition coefficient as log Pow: 6.12
ENVIRONMENTAL DATA	This substance may be hazardous to the environment; special attention should be given to air quality and water quality.	

NOTES

Benzo(b)fluoranthene is present as a component of polycyclic aromatic hydrocarbons (PAH) content in the environment usually resulting from the incomplete combustion or pyrolysis of organic matters, especially fossil fuels and tobacco.ACGIH recommends environment containing benzo(b)fluoranthene should be evaluated in terms of the TLV-TWA for coal tar pitch volatile, as benzene soluble 0.2 mg/m³. Insufficient data are available on the effect of this substance on human health, therefore utmost care must be taken.

ADDITIONAL INFORMATION

(C) IPCS, CEC, 1994

IMPORTANT LEGAL NOTICE:	Neither NIOSH, the CEC or the IPCS nor any person acting on behalf of NIOSH, the CEC or the IPCS is responsible for the use which might be made of this information. This card contains the collective views of the IPCS Peer Review Committee and may not reflect in all cases all the detailed requirements included in national legislation on the subject. The user should verify compliance of the cards with the relevant legislation in the country of use. The only modifications made to produce the U.S. version is inclusion of the OSHA PELs, NIOSH RELs and NIOSH IDLH values.

International Chemical Safety Cards

BENZO(a)PYRENE

ICSC: 0104

Benz(a)pyrene
3,4-Benzopyrene
Benzo(d,e,f)chrysene
$C_{20}H_{12}$
Molecular mass: 252.3

ICSC # 0104
CAS # 50-32-8
RTECS # DJ3675000
EC # 601-032-00-3
October 17, 2005 Validated

TYPES OF HAZARD/ EXPOSURE	ACUTE HAZARDS/ SYMPTOMS	PREVENTION	FIRST AID/ FIRE FIGHTING
FIRE	Combustible.	NO open flames.	Water spray, foam, powder, carbon dioxide.
EXPLOSION			
EXPOSURE	See EFFECTS OF LONG-TERM OR REPEATED EXPOSURE.	AVOID ALL CONTACT! AVOID EXPOSURE OF (PREGNANT) WOMEN!	
•INHALATION		Local exhaust or breathing protection.	Fresh air, rest.
•SKIN	MAY BE ABSORBED!	Protective gloves. Protective clothing.	Remove contaminated clothes. Rinse and then wash skin with water and soap.
•EYES		Safety goggles or eye protection in combination with breathing protection.	First rinse with plenty of water for several minutes (remove contact lenses if easily possible), then take to a doctor.
•INGESTION		Do not eat, drink, or smoke during work.	Induce vomiting (ONLY IN CONSCIOUS PERSONS!). Refer for medical attention.

SPILLAGE DISPOSAL	STORAGE	PACKAGING & LABELLING
Evacuate danger area! Personal protection: complete protective clothing including self-contained breathing apparatus. Do NOT let this chemical enter the environment. Sweep spilled substance into sealable containers; if appropriate, moisten first to prevent dusting. Carefully collect remainder,	Separated from strong oxidants.	T symbol N symbol R: 45-46-60-61-43-50/53 S: 53-45-60-61

then remove to safe place.

SEE IMPORTANT INFORMATION ON BACK

ICSC: 0104

Prepared in the context of cooperation between the International Programme on Chemical Safety & the Commission of the European Communities (C) IPCS CEC 1994 No modifications to the International version have been made except to add the OSHA PELs, NIOSH RELs and NIOSH IDLH values

International Chemical Safety Cards

ICSC: 0104

BENZO(a)PYRENE

I M P O R T A N T D A T A	**PHYSICAL STATE; APPEARANCE:** PALE-YELLOW CRYSTALS **PHYSICAL DANGERS:** **CHEMICAL DANGERS:** Reacts with strong oxidants causing fire and explosion hazard. **OCCUPATIONAL EXPOSURE LIMITS:** TLV: Exposure by all routes should be carefully controlled to levels as low as possible A2 (suspected human carcinogen); (ACGIH 2005). MAK: Carcinogen category: 2; Germ cell mutagen group: 2; (DFG 2005).	**ROUTES OF EXPOSURE:** The substance can be absorbed into the body by inhalation of its aerosol, through the skin and by ingestion. **INHALATION RISK:** Evaporation at 20°C is negligible; a harmful concentration of airborne particles can, however, be reached quickly when dispersed. **EFFECTS OF SHORT-TERM EXPOSURE:** **EFFECTS OF LONG-TERM OR REPEATED EXPOSURE:** This substance is carcinogenic to humans. May cause heritable genetic damage to human germ cells. Animal tests show that this substance possibly causes toxicity to human reproduction or development.
PHYSICAL PROPERTIES	Boiling point: 496°C Melting point: 178.1°C Density: 1.4 g/cm³	Solubility in water: none (<0.1 g/100 ml) Vapour pressure: negligible Octanol/water partition coefficient as log Pow: 6.04
ENVIRONMENTAL DATA	The substance is very toxic to aquatic organisms. Bioaccumulation of this chemical may occur in fish, in plants and in molluscs. The substance may cause long-term effects in the aquatic environment.	

NOTES

Do NOT take working clothes home. Benzo(a)pyrene is present as a component of polycyclic aromatic hydrocarbons (PAHs) in the environment, usually resulting from the incomplete combustion or pyrolysis of organic matters, especially fossil fuels and tobacco.

ADDITIONAL INFORMATION

ICSC: 0104	BENZO(a)PYRENE

(C) IPCS, CEC, 1994

IMPORTANT LEGAL NOTICE:	Neither NIOSH, the CEC or the IPCS nor any person acting on behalf of NIOSH, the CEC or the IPCS is responsible for the use which might be made of this information. This card contains the collective views of the IPCS Peer Review Committee and may not reflect in all cases all the detailed requirements included in national legislation on the subject. The user should verify compliance of the cards with the relevant legislation in the country of use. The only modifications made to produce the U.S. version is inclusion of the OSHA PELs, NIOSH RELs and NIOSH IDLH values.

International Chemical Safety Cards

BENZO(ghi)PERYLENE

ICSC: 0739

UNEP

National Institute for Occupational Safety and Health NIOSH

1,12-Benzoperylene
1,12-Benzperylene
$C_{22}H_{12}$
Molecular mass: 276.3

ICSC # 0739
CAS # 191-24-2
RTECS # DI6200500
October 18, 1999 Validated

TYPES OF HAZARD/ EXPOSURE	ACUTE HAZARDS/ SYMPTOMS	PREVENTION	FIRST AID/ FIRE FIGHTING
FIRE	Combustible under specific conditions.	NO open flames.	In case of fire in the surroundings: all extinguishing agents allowed.
EXPLOSION			
EXPOSURE		PREVENT DISPERSION OF DUST!	
•INHALATION		Local exhaust or breathing protection.	Fresh air, rest.
•SKIN		Protective gloves. Protective clothing.	Remove contaminated clothes. Rinse and then wash skin with water and soap.
•EYES		Safety spectacles, or eye protection in combination with breathing protection if powder.	First rinse with plenty of water for several minutes (remove contact lenses if easily possible), then take to a doctor.
•INGESTION		Do not eat, drink, or smoke during work	Rinse mouth. Refer for medical attention.

SPILLAGE DISPOSAL	STORAGE	PACKAGING & LABELLING
Sweep spilled substance into covered containers. Carefully collect remainder, then remove to safe place. Do NOT let this chemical enter the environment.	Well closed.	

SEE IMPORTANT INFORMATION ON BACK

ICSC: 0739

Prepared in the context of cooperation between the International Programme on Chemical Safety & the Commission of the European Communities (C) IPCS CEC 1999. No modifications to the international version have been made except to add the OSHA PELs, NIOSH RELs and NIOSH IDLH values.

International Chemical Safety Cards

BENZO(ghi)PERYLENE

ICSC: 0739

IMPORTANT DATA	**PHYSICAL STATE; APPEARANCE:** PALE YELLOW-GREEN CRYSTALS. **PHYSICAL DANGERS:** **CHEMICAL DANGERS:** Upon heating, toxic fumes are formed. **OCCUPATIONAL EXPOSURE LIMITS:** TLV not established.	**ROUTES OF EXPOSURE:** The substance can be absorbed into the body by inhalation of its aerosol and through the skin. **INHALATION RISK:** Evaporation at 20°C is negligible; a harmful concentration of airborne particles can, however, be reached quickly. **EFFECTS OF SHORT-TERM EXPOSURE:** **EFFECTS OF LONG-TERM OR REPEATED EXPOSURE:**
PHYSICAL PROPERTIES	Boiling point: 550°C Melting point: 278°C Density: 1.3 g/cm³	Solubility in water: none Octanol/water partition coefficient as log Pow: 6.58
ENVIRONMENTAL DATA	This substance may be hazardous to the environment; special attention should be given to air and water.	

NOTES

Benzo(ghi)perylene is present as a component of polycyclic aromatic hydrocarbons (PAH) content in the environment usually resulting from the incomplete combustion or pyrolysis of organic matters, especially fossil fuels and tobacco. Data are insufficiently available on the effect of this substance on human health, therefore utmost care must be taken.

ADDITIONAL INFORMATION

ICSC: 0739 **BENZO(ghi)PERYLENE**

(C) IPCS, CEC, 1994

IMPORTANT LEGAL NOTICE: Neither NIOSH, the CEC or the IPCS nor any person acting on behalf of NIOSH, the CEC or the IPCS is responsible for the use which might be made of this information. This card contains the collective views of the IPCS Peer Review Committee and may not reflect in all cases all the detailed requirements included in national legislation on the subject. The user should verify compliance of the cards with the relevant legislation in the country of use. The only modifications made to produce the U.S. version is inclusion of the OSHA PELs, NIOSH RELs and NIOSH IDLH values.

International Chemical Safety Cards

POLYCHLORINATED BIPHENYL (AROCLOR 1254)

ICSC: 0939

Chlorobiphenyl (54% chlorine)
Chlorodiphenyl (54% chlorine)
PCB
Molecular mass: 327 (average)

ICSC # 0939
CAS # 11097-69-1
RTECS # TQ1360000
UN # 2315
EC # 602-039-00-4
October 20, 1999 Validated

TYPES OF HAZARD/ EXPOSURE	ACUTE HAZARDS/ SYMPTOMS	PREVENTION	FIRST AID/ FIRE FIGHTING
FIRE	Not combustible. Gives off irritating or toxic fumes (or gases) in a fire.		In case of fire in the surroundings: powder, carbon dioxide.
EXPLOSION			
EXPOSURE		PREVENT GENERATION OF MISTS! STRICT HYGIENE!	
•INHALATION		Ventilation.	Fresh air, rest. Refer for medical attention.
•SKIN	MAY BE ABSORBED! Dry skin. Redness.	Protective gloves. Protective clothing.	Remove contaminated clothes. Rinse and then wash skin with water and soap. Refer for medical attention.
•EYES		Safety goggles, face shield.	First rinse with plenty of water for several minutes (remove contact lenses if easily possible), then take to a doctor.
•INGESTION	Headache. Numbness.	Do not eat, drink, or smoke during work.	Rest. Refer for medical attention.

SPILLAGE DISPOSAL	STORAGE	PACKAGING & LABELLING
Consult an expert! Collect leaking liquid in sealable containers. Absorb remaining liquid in sand or inert absorbent and remove to safe place. Do NOT let this chemical enter the environment. Personal protection: complete protective clothing including self-contained breathing apparatus.	Separated from food and feedstuffs. Cool. Dry. Keep in a well-ventilated room.	Unbreakable packaging; put breakable packaging into closed unbreakable container. Do not transport with food and feedstuffs. Severe marine pollutant. Note: C Xn symbol N symbol R: 33-50/53 S: 2-35-60-61 UN Hazard Class: 9 UN Packing Group: II

SEE IMPORTANT INFORMATION ON BACK

ICSC: 0939

Prepared in the context of cooperation between the International Programme on Chemical Safety & the Commission of the European Communities (C) IPCS CEC 1994. No modifications to the International version have been made except to add the OSHA PELs, NIOSH RELs and NIOSH IDLH values.

International Chemical Safety Cards

POLYCHLORINATED BIPHENYL (AROCLOR 1254)

ICSC: 0939

I M	PHYSICAL STATE; APPEARANCE: LIGHT YELLOW VISCOUS LIQUID.	ROUTES OF EXPOSURE: The substance can be absorbed into the body by inhalation of its aerosol, through the skin and by ingestion.

P O R T A N T O A T A	**PHYSICAL DANGERS:** **CHEMICAL DANGERS:** The substance decomposes in a fire producing irritating and toxic gases **OCCUPATIONAL EXPOSURE LIMITS:** TLV: 0.5 mg/m³ as TWA (skin) A3 (ACGIH 2004). MAK: 0.05 ppm 0.70 mg/m³ H Peak Limitation category: II(8) Carcinogen category: 3B Pregnancy risk group: B (DFG 2004). OSHA PEL: TWA 0.5 mg/m³ skin NIOSH REL*: Ca TWA 0.001 mg/m³ See Appendix A *Note The REL also applies to other PCBs. NIOSH IDLH: Ca 5 mg/m³ See: IDLH INDEX	**INHALATION RISK:** A harmful contamination of the air will be reached rather slowly on evaporation of this substance at 20°C **EFFECTS OF SHORT-TERM EXPOSURE:** **EFFECTS OF LONG-TERM OR REPEATED EXPOSURE:** Repeated or prolonged contact with skin may cause dermatitis. The substance may have effects on the liver. Animal tests show that this substance possibly causes toxic effects upon human reproduction.
PHYSICAL PROPERTIES	Relative density (water = 1): 1.5 Solubility in water: none	Vapour pressure, Pa at 25°C: 0.01 Octanol/water partition coefficient as log Pow: 6.30 (estimated)
ENVIRONMENTAL DATA	In the food chain important to humans, bioaccumulation takes place, specifically in aquatic organisms. It is strongly advised not to let the chemical enter into the environment.	

NOTES

Changes into a resinous state (pour point) at 10°C. Distillation range: 365°-390°C.

Transport Emergency Card: TEC (R)-90GM2-II-L

ADDITIONAL INFORMATION

ICSC: 0939 **POLYCHLORINATED BIPHENYL (AROCLOR 1254)**

(C) IPCS, CEC, 1994

IMPORTANT LEGAL NOTICE: Neither NIOSH, the CEC or the IPCS nor any person acting on behalf of NIOSH, the CEC or the IPCS is responsible for the use which might be made of this information. This card contains the collective views of the IPCS Peer Review Committee and may not reflect in all cases all the detailed requirements included in national legislation on the subject. The user should verify compliance of the cards with the relevant legislation in the country of use. The only modifications made to produce the U.S. version is inclusion of the OSHA PELs, NIOSH RELs and NIOSH IDLH values

International Chemical Safety Cards

ALDRIN

ICSC: 0774

1,2,3,4,10,10-Hexachloro-1,4,4a,5,8,8a-hexahydro-exo-1,4-endo-5,8-dimethanonaphthalene
1,45,8-Dimethanonaphthalene, 1,2,3,4,10,10-hexachloro-1,4,4a,5,8,8a-hexahydro-, (1alpha,4alpha,4aß,5alpha,8alpha,8aß)
HHDN
$C_{12}H_8Cl_6$
Molecular mass: 364.9

ICSC # 0774
CAS # 309-00-2
RTECS # IO2100000
UN # 2761
EC # 602-048-00-3
March 26, 1998 Validated

TYPES OF HAZARD/ EXPOSURE	ACUTE HAZARDS/ SYMPTOMS	PREVENTION	FIRST AID/ FIRE FIGHTING
FIRE	Not combustible. Liquid formulations containing organic solvents may be flammable. Gives off irritating or toxic fumes (or gases) in a fire.		In case of fire in the surroundings: all extinguishing agents allowed.
EXPLOSION			
EXPOSURE		PREVENT DISPERSION OF DUST! STRICT HYGIENE! AVOID EXPOSURE OF ADOLESCENTS AND CHILDREN!	
•INHALATION	(See Ingestion).	Ventilation (not if powder).	Fresh air, rest. Refer for medical attention.
•SKIN	MAY BE ABSORBED! See Ingestion.	Protective gloves. Protective clothing.	Remove contaminated clothes. Rinse and then wash skin with water and soap. Refer for medical attention.
•EYES		Safety goggles, or face shield.	First rinse with plenty of water for several minutes (remove contact lenses if easily possible), then take to a doctor.
•INGESTION	Convulsions. Dizziness. Headache. Nausea. Vomiting. Muscle twitching.	Do not eat, drink, or smoke during work. Wash hands before eating.	Give a slurry of activated charcoal in water to drink. Do NOT induce vomiting. Rest. Refer for medical attention.

SPILLAGE DISPOSAL	STORAGE	PACKAGING & LABELLING
Do NOT wash away into sewer. Sweep spilled substance into sealable containers; if appropriate, moisten first to prevent dusting. Carefully collect remainder, then remove to safe place. (Extra personal protection: chemical protection suit including self-contained breathing apparatus).	Provision to contain effluent from fire extinguishing. Separated from food and feedstuffs and incompatible materials: See Chemical Dangers. Well closed. Keep in a well-ventilated room. Store in an area without drain or sewer access.	Do not transport with food and feedstuffs. Severe marine pollutant. T symbol N symbol R: 24/25-40-48/24/25-50/53 S: 1/2-22-36/37-45-60-61 UN Hazard Class: 6.1 UN Packing Group: II

SEE IMPORTANT INFORMATION ON BACK

ICSC: 0774

Prepared in the context of cooperation between the International Programme on Chemical Safety & the Commission of the European Communities (C) IPCS CEC 1994. No modifications to the International version have been made except to add the OSHA PELs, NIOSH RELs and NIOSH IDLH values.

International Chemical Safety Cards

ALDRIN

ICSC: 0774

I M P O R T A N T D A T A	**PHYSICAL STATE; APPEARANCE:** COLOURLESS CRYSTALS **PHYSICAL DANGERS:** **CHEMICAL DANGERS:** The substance decomposes on heating producing toxic and corrosive fumes including hydrogen chloride. Reacts with acids and oxidants. Attacks many metals in presence of water. **OCCUPATIONAL EXPOSURE LIMITS:** TLV: 0.25 mg/m³ (as TWA), A3 (skin) (ACGIH 1997). MAK: (Inhalable fraction) 0.25 mg/m³ skin absorption (H); Peak limitation category: II(8) (DFG 2006). OSHA PEL: TWA 0.25 mg/m^3 skin NIOSH REL: Ca TWA 0.25 mg/m^3 skin See Appendix A NIOSH IDLH: Ca 25 mg/m^3 See: 309002	**ROUTES OF EXPOSURE:** The substance can be absorbed into the body through the skin and by ingestion. **INHALATION RISK:** Evaporation at 20°C is negligible; a harmful concentration of airborne particles can, however, be reached quickly on spraying. **EFFECTS OF SHORT-TERM EXPOSURE:** The substance may cause effects on the central nervous system, resulting in convulsions. The effects may be delayed. Medical observation is indicated. **EFFECTS OF LONG-TERM OR REPEATED EXPOSURE:** The substance accumulates in the human body. Cumulative effects are possible: see Acute Hazards/Symptoms.
PHYSICAL PROPERTIES	Boiling point at 0.27kPa: 145°C Melting point: 104-105°C Density: 1.6 g/cm³	Solubility in water: none Vapour pressure, Pa at 20°C: 0.009 Octanol/water partition coefficient as log Pow: 7.4
ENVIRONMENTAL DATA	The substance is very toxic to aquatic organisms. This substance may be hazardous to the environment; special attention should be given to birds, honey bees. In the food chain important to humans, bioaccumulation takes place, specifically in aquatic organisms. It is strongly advised not to let the chemical enter into the environment because it persists	

in the environment. The substance may cause long-term effects in the aquatic environment. Avoid release to the environment in circumstances different to normal use.

NOTES

Other melting points: 49-60°C (technical grade). Depending on the degree of exposure, periodic medical examination is indicated. If the substance is formulated with solvent(s) also consult the card(s) (ICSC) of the solvent(s). Carrier solvents used in commercial formulations may change physical and toxicological properties. Do NOT take working clothes home. The recommendations on this Card also apply to ICSC 0787 (dieldrin). Aldrec, Aldrex, Aldrite, Aldron, Aldrosol, Algran, Altox, Drinox, Octalene, Seedrin, and Toxadrin are trade names.

Transport Emergency Card: TEC (R)-61G41b.
NFPA Code: H2; F0; R0;

Card has been partially updated in August 2007: see Storage, Occupational Exposure Limits.

ADDITIONAL INFORMATION

ICSC: 0774 **ALDRIN**

(C) IPCS, CEC, 1994

IMPORTANT LEGAL NOTICE: Neither NIOSH, the CEC or the IPCS nor any person acting on behalf of NIOSH, the CEC or the IPCS is responsible for the use which might be made of this information. This card contains the collective views of the IPCS Peer Review Committee and may not reflect in all cases all the detailed requirements included in national legislation on the subject. The user should verify compliance of the cards with the relevant legislation in the country of use. The only modifications made to produce the U.S. version is inclusion of the OSHA PELs, NIOSH RELs and NIOSH IDLH values.

International Chemical Safety Cards

ENDRIN

ICSC: 1023

UNEP

National Institute for Occupational Safety and Health NIOSH

$C_{12}H_8Cl_6O$
Molecular mass: 380.9

ICSC # 1023
CAS # 72-20-8
RTECS # IO1575000
UN # 2761
EC # 602-051-00-X
March 10, 2000 Validated

TYPES OF HAZARD/ EXPOSURE	ACUTE HAZARDS/ SYMPTOMS	PREVENTION	FIRST AID/ FIRE FIGHTING
FIRE	Not combustible. Liquid formulations containing organic solvents may be flammable. Gives off irritating or toxic fumes (or gases) in a fire.		In case of fire in the surroundings: all extinguishing agents allowed.
EXPLOSION			
EXPOSURE		PREVENT DISPERSION OF DUST! STRICT HYGIENE!	IN ALL CASES CONSULT A DOCTOR!
•INHALATION	(See Ingestion).	Local exhaust or breathing protection.	Fresh air, rest. Refer for medical attention.
•SKIN	MAY BE ABSORBED!	Protective gloves. Protective clothing.	Remove contaminated clothes. Rinse and then wash skin with water and soap. Refer for medical attention.
•EYES		Face shield or eye protection in combination with breathing protection if powder.	First rinse with plenty of water for several minutes (remove contact lenses if easily possible), then take to a doctor.
•INGESTION	Dizziness. Weakness. Headache. Nausea. Vomiting. Convulsions.	Do not eat, drink, or smoke during work. Wash hands before eating.	Give a slurry of activated charcoal in water to drink. Rest. Refer for medical attention.

SPILLAGE DISPOSAL	STORAGE	PACKAGING & LABELLING
Do NOT wash away into sewer. Sweep spilled substance into sealable containers; if appropriate, moisten first to prevent dusting. Carefully collect remainder, then remove to safe place. Do NOT let this chemical enter the environment. (Extra personal protection:	Provision to contain effluent from fire extinguishing. Separated from food and feedstuffs Well closed. Keep in a well-ventilated room.	Do not transport with food and feedstuffs. Severe marine pollutant. T+ symbol N symbol R: 24-28-50/53

chemical protection suit including self-contained breathing apparatus).		S: 1/2-22-36/37-45-60-61 UN Hazard Class: 6.1 UN Packing Group: I

SEE IMPORTANT INFORMATION ON BACK

ICSC: 1023

Prepared in the context of cooperation between the International Programme on Chemical Safety & the Commission of the European Communities (C) IPCS CEC 1994. No modifications to the International version have been made except to add the OSHA PELs, NIOSH RELs and NIOSH IDLH values

International Chemical Safety Cards

ICSC: 1023

ENDRIN

I M P O R T A N T D A T A	**PHYSICAL STATE; APPEARANCE:** WHITE CRYSTALS **PHYSICAL DANGERS:** **CHEMICAL DANGERS:** The substance decomposes on heating above 245°C, producing hydrogen chloride phosgene **OCCUPATIONAL EXPOSURE LIMITS:** TLV: 0.1 mg/m³ (skin) (ACGIH 2000). OSHA PEL: TWA 0.1 mg/m^3 skin NIOSH REL: TWA 0.1 mg/m^3 skin NIOSH IDLH: 2 mg/m^3 See: 72208	**ROUTES OF EXPOSURE:** The substance can be absorbed into the body by inhalation, through the skin and by ingestion. **INHALATION RISK:** Evaporation at 20°C is negligible; a harmful concentration of airborne particles can, however, be reached quickly on spraying or when dispersed, especially if powdered. **EFFECTS OF SHORT-TERM EXPOSURE:** The substance may cause effects on the central nervous system , resulting in convulsions and death. The effects may be delayed. Medical observation is indicated. **EFFECTS OF LONG-TERM OR REPEATED EXPOSURE:**
PHYSICAL PROPERTIES	Decomposes below boiling point at 245°C Melting point: 200°C Density: 1.7 g/cm³	Solubility in water, g/100 ml at 25°C: none Vapour pressure, Pa at 25°C: negligible Octanol/water partition coefficient as log Pow: 5.34
ENVIRONMENTAL DATA	The substance is very toxic to aquatic organisms. This substance may be hazardous to the environment; special attention should be given to honey bees birds mammals It is strongly advised not to let the chemical enter into the environment because it persists in the environment. In the food chain important to humans, bioaccumulation takes place, specifically in fish seafood Avoid release to the environment in circumstances different to normal use.	

NOTES

If the substance is formulated with solvent(s) also consult the card(s) (ICSC) of the solvent(s). Carrier solvents used in commercial formulations may change physical and toxicological properties. Do NOT take working clothes home.

Transport Emergency Card: TEC (R)-61G41a

NFPA Code: H3; F0; R; 0

ADDITIONAL INFORMATION	

ICSC: 1023 **ENDRIN**

(C) IPCS, CEC, 1994

IMPORTANT LEGAL NOTICE: Neither NIOSH, the CEC or the IPCS nor any person acting on behalf of NIOSH, the CEC or the IPCS is responsible for the use which might be made of this information. This card contains the collective views of the IPCS Peer Review Committee and may not reflect in all cases all the detailed requirements included in national legislation on the subject. The user should verify compliance of the cards with the relevant legislation in the country of use. The only modifications made to produce the U.S. version is inclusion of the OSHA PELs, NIOSH RELs and NIOSH IDLH values.

International Chemical Safety Cards

CHLORDANE (TECHNICAL PRODUCT)

ICSC: 0740

1,2,4,5,6,7,8,8-Octachloro-2,3,3a,4,7,7a-hexahydro-4,7-methanoindene
1,2,4,5,6,7,8,8-Octachloro-2.3,3a,4,7,7a-hexahydro-4,7-methano-1H-indene
$C_{10}H_6Cl_8$
Molecular mass: 409.8

ICSC # 0740
CAS # 57-74-9
UN # 2996
EC # 602-047-00-8
March 26, 1998 Validated

TYPES OF HAZARD/ EXPOSURE	ACUTE HAZARDS/ SYMPTOMS	PREVENTION	FIRST AID/ FIRE FIGHTING
FIRE	Liquid formulations containing organic solvents may be flammable. Gives off irritating or toxic fumes (or gases) in a fire.	NO open flames.	Alcohol-resistant foam, powder, carbon dioxide.
EXPLOSION			
EXPOSURE		PREVENT GENERATION OF MISTS! STRICT HYGIENE! AVOID EXPOSURE OF ADOLESCENTS AND CHILDREN!	IN ALL CASES CONSULT A DOCTOR!
•INHALATION	(See Ingestion).	Breathing protection.	Fresh air, rest. Refer for medical attention.
•SKIN	MAY BE ABSORBED!	Protective gloves. Protective clothing.	Remove contaminated clothes. Rinse and then wash skin with water and soap.
•EYES	Redness. Pain.	Safety goggles face shield or eye protection in combination with breathing protection.	First rinse with plenty of water for several minutes (remove contact lenses if easily possible), then take to a doctor.
•INGESTION	Confusion. Convulsions. Nausea. Vomiting.	Do not eat, drink, or smoke during work. Wash hands before eating.	Rest. Refer for medical attention.

SPILLAGE DISPOSAL	STORAGE	PACKAGING & LABELLING
Collect leaking and spilled liquid in sealable containers as far as possible. Absorb remaining liquid in sand or inert absorbent and remove to safe place. Do NOT wash away into sewer. Personal protection: chemical protection suit	Provision to contain effluent from fire extinguishing. Separated from food and feedstuffs bases and incompatible materials See Chemical Dangers. Well closed. Keep in a well-ventilated room.	Do not transport with food and feedstuffs. Severe marine pollutant. Xn symbol N symbol

including self-contained breathing apparatus.		R: 21/22-40-50/53 S: 2-36/37-60-61 UN Hazard Class: 6.1 UN Packing Group: III

SEE IMPORTANT INFORMATION ON BACK

ICSC: 0740

Prepared in the context of cooperation between the International Programme on Chemical Safety & the Commission of the European Communities (C) IPCS CEC 1994. No modifications to the International version have been made except to add the OSHA PELs, NIOSH RELs and NIOSH IDLH values.

International Chemical Safety Cards

CHLORDANE (TECHNICAL PRODUCT)

ICSC: 0740

I M P O R T A N T D A T A	**PHYSICAL STATE; APPEARANCE:** TECHNICAL: LIGHT YELLOW TO AMBER VISCOUS LIQUID **PHYSICAL DANGERS:** **CHEMICAL DANGERS:** The substance decomposes on burning, on contact with bases producing toxic fumes including phosgene hydrogen chloride Attacks iron, zinc, plastic, rubber and coatings. **OCCUPATIONAL EXPOSURE LIMITS:** TLV: 0.5 mg/m³ as TWA (skin) A3 (confirmed animal carcinogen with unknown relevance to humans); (ACGIH 2004). MAK: (inhalable fraction) 0.5 mg/m³ Peak limitation category: II(8); skin absorption (H); Carcinogen category: 3B; (DFG 2004). OSHA PEL: TWA 0.5 mg/m^3 skin NIOSH REL: Ca TWA 0.5 mg/m^3 skin See Appendix A NIOSH IDLH: Ca 100 mg/m^3 See: 57749	**ROUTES OF EXPOSURE:** The substance can be absorbed into the body by inhalation, through the skin and by ingestion. **INHALATION RISK:** Evaporation at 20°C is negligible; a harmful concentration of airborne particles can, however, be reached quickly on spraying. **EFFECTS OF SHORT-TERM EXPOSURE:** Exposure at high levels may result in disorientation, tremors, convulsions, respiratory failure and death. Medical observation is indicated. **EFFECTS OF LONG-TERM OR REPEATED EXPOSURE:** The substance may have effects on the liver immune system , resulting in tissue lesions and liver impairment. This substance is possibly carcinogenic to humans.
PHYSICAL PROPERTIES	Boiling point at 0.27kPa: 175°C Relative density (water = 1): 1.59-1.63 Solubility in water: none	Vapour pressure, Pa at 25°C: 0.0013 Octanol/water partition coefficient as log Pow: 2.78
ENVIRONMENTAL DATA	The substance is very toxic to aquatic organisms. This substance may be hazardous to the environment; special attention should be given to soil organisms, honey bees. It is strongly advised that this substance does not enter the environment. The substance may cause long-term effects in the aquatic environment.	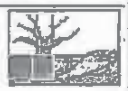

NOTES

If the substance is formulated with solvents also consult the ICSCs of these materials. Carrier solvents used in commercial formulations may change physical and toxicological properties. Belt, Chlor Kil, Chlortox, Corodan, Gold Crest, Intox,

Kypchlor, Niran, Octachlor, Sydane, Synklor, Termi-Ded, Topiclor, and Toxichlor are trade names. Also consult ICSC 0743 Heptachlor.

Transport Emergency Card: TEC (R)-61GT6-III

ADDITIONAL INFORMATION

ICSC: 0740 **CHLORDANE (TECHNICAL PRODUCT)**

(C) IPCS, CEC, 1994

IMPORTANT LEGAL NOTICE: Neither NIOSH, the CEC or the IPCS nor any person acting on behalf of NIOSH, the CEC or the IPCS is responsible for the use which might be made of this information. This card contains the collective views of the IPCS Peer Review Committee and may not reflect in all cases all the detailed requirements included in national legislation on the subject. The user should verify compliance of the cards with the relevant legislation in the country of use. The only modifications made to produce the U.S. version is inclusion of the OSHA PELs, NIOSH RELs and NIOSH IDLH values.

September 2005

NIOSH Pocket Guide to Chemical Hazards

NPG Home | Introduction | Synonyms & Trade Names | Chemical Names | CAS Numbers | RTECS Numbers | Appendices | Search

Chlorinated camphene

CAS 8001-35-2

$C_{10}H_{10}Cl_8$

RTECS XW5250000

Synonyms & Trade Names
Chlorocamphene, Octachlorocamphene, Polychlorocamphene, Toxaphene

DOT ID & Guide
2761 151

Exposure Limits
NIOSH REL: Ca [skin] See Appendix A
OSHA PEL†: TWA 0.5 mg/m^3 [skin]

IDLH Ca [200 mg/m^3] See: 8001352

Conversion

Physical Description
Amber, waxy solid with a mild, piney, chlorine- and camphor-like odor. [insecticide]

MW: 413.8	BP: Decomposes	MLT: 149-194°F	Sol: 0.0003%
VP(77°F): 0.4 mmHg	IP: ?		Sp.Gr: 1.65
Fl.P: NA	UEL: NA	LEL: NA	

Noncombustible Solid, but may be dissolved in flammable liquids.

Incompatibilities & Reactivities
Strong oxidizers [Note: Slightly corrosive to metals under moist conditions.]

Measurement Methods
NIOSH 5039
See: NMAM or OSHA Methods

Personal Protection & Sanitation (See protection codes)
Skin: Prevent skin contact
Eyes: Prevent eye contact
Wash skin: When contaminated/Daily
Remove: When wet or contaminated
Change: Daily
Provide: Eyewash, Quick drench

First Aid (See procedures)
Eye: Irrigate immediately
Skin: Soap wash promptly
Breathing: Respiratory support
Swallow: Medical attention immediately

Respirator Recommendations NIOSH
At concentrations above the NIOSH REL, or where there is no REL, at any detectable concentration
(APF = 10,000) Any self-contained breathing apparatus that has a full facepiece and is operated in a pressure- demand or other positive-pressure mode
(APF = 10,000) Any supplied-air respirator that has a full facepiece and is operated in a pressure-demand or other positive-pressure mode in combination with an auxiliary self-contained positive-pressure breathing apparatus
Escape:
(APF = 50) Any air-purifying, full-facepiece respirator (gas mask) with a chin-style, front- or back-mounted organic vapor canister having an N100, R100, or P100 filter. Click here for information on selection of N, R, or P filters./Any appropriate escape-type, self-contained breathing apparatus
Important additional information about respirator selection

Exposure Routes inhalation, skin absorption, ingestion, skin and/or eye contact

Symptoms Nausea, confusion, agitation, tremor, convulsions, unconsciousness; dry, red skin; [potential occupational carcinogen]

Target Organs central nervous system, skin

Cancer Site [in animals: liver cancer]

International Chemical Safety Cards

DDT

ICSC: 0034

Dichlorodiphenyltrichloroethane
1,1,1-Trichloro-2,2-bis(p-chlorophenyl)ethane
2,2-bis(p-Chlorophenyl)-1,1,1-trichloroethane
1,1'-(2,2,2-Trichloroethylidene)bis(4-chlorobenzene)
p,p'-DDT
$C_{14}H_9Cl_5$
Molecular mass: 354.5

ICSC # 0034
CAS # 50-29-3
RTECS # KJ3325000
UN # 2761
EC # 602-045-00-7
April 20, 2004 Validated

TYPES OF HAZARD/ EXPOSURE	ACUTE HAZARDS/ SYMPTOMS	PREVENTION	FIRST AID/ FIRE FIGHTING
FIRE	Combustible. Liquid formulations containing organic solvents may be flammable. Gives off irritating or toxic fumes (or gases) in a fire.	NO open flames	Powder, water spray, foam, carbon dioxide.
EXPLOSION			
EXPOSURE		PREVENT DISPERSION OF DUST! STRICT HYGIENE! AVOID EXPOSURE OF (PREGNANT) WOMEN!	
•INHALATION	Cough.	Local exhaust or breathing protection.	Fresh air, rest.
•SKIN		Protective gloves.	Remove contaminated clothes. Rinse and then wash skin with water and soap.
•EYES	Redness	Safety goggles, or eye protection in combination with breathing protection if powder.	First rinse with plenty of water for several minutes (remove contact lenses if easily possible), then take to a doctor.
•INGESTION	Tremors. Diarrhoea. Dizziness. Headache. Vomiting. Numbness. Paresthesias. Hyperexcitability. Convulsions.	Do not eat, drink, or smoke during work. Wash hands before eating.	Rinse mouth. Give a slurry of activated charcoal in water to drink. Rest. Refer for medical attention.

SPILLAGE DISPOSAL	STORAGE	PACKAGING & LABELLING
Do NOT let this chemical enter the environment. Sweep spilled substance into sealable non-metallic containers; if appropriate, moisten first to prevent dusting. Carefully collect remainder, then remove to safe place. Personal protection: P3 filter respirator for toxic particles.	Provision to contain effluent from fire extinguishing. Separated from iron, aluminum and its salts, food and feedstuffs. See Chemical Dangers.	Do not transport with food and feedstuffs. Severe marine pollutant. T symbol N symbol R: 25-40-48/25-50/53 S: 1/2-22-36/37-45-60-61 UN Hazard Class: 6.1 UN Packing Group: III

SEE IMPORTANT INFORMATION ON BACK

ICSC: 0034

Prepared in the context of cooperation between the International Programme on Chemical Safety & the Commission of the European Communities (C) IPCS CEC 1994 No modifications to the International version have been made except to add the OSHA PELs, NIOSH RELs and NIOSH IDLH values

International Chemical Safety Cards

DDT

ICSC: 0034

See also: INTRODUCTION See ICSC CARD: 0843

NIOSH Home | NIOSH Search | Site Index | Topic List | Contact Us

I M P O R T A N T D A T A	**PHYSICAL STATE; APPEARANCE:** COLOURLESS CRYSTALS WHITE POWDER, TECHNICAL PRODUCT IS WAXY SOLID. **PHYSICAL DANGERS:** **CHEMICAL DANGERS:** On combustion, forms toxic and corrosive fumesincludinghydrogen chloride. Reacts with aluminium and iron. **OCCUPATIONAL EXPOSURE LIMITS:** TLV: 1 mg/m³ as TWA A3 (ACGIH 2004). MAK: 1 mg/m³ H Peak limitation category: II(8) (DFG 2003). OSHA PEL: TWA 1 mg/m³ skin NIOSH REL: Ca TWA 0.5 mg/m³ See Appendix A NIOSH IDLH: Ca 500 mg/m³ See: 50293	**ROUTES OF EXPOSURE:** The substance can be absorbed into the body by ingestion. **INHALATION RISK:** Evaporation at 20°C is negligible; a harmful concentration of airborne particles can, however, be reached quickly especially if powdered. **EFFECTS OF SHORT-TERM EXPOSURE:** May cause mechanical irritation. The substance may cause effects on the central nervous system , resulting in convulsions and respiratory depression Exposure at high levels may result in death. Medical observation is indicated. **EFFECTS OF LONG-TERM OR REPEATED EXPOSURE:** The substance may have effects on the central nervous system and liver. This substance is possibly carcinogenic to humans Animal tests show that this substance possibly causes toxicity to human reproduction or development.
PHYSICAL PROPERTIES	Boiling point: 260°C Melting point: 109°C Density: 1.6 g/cm³	Solubility in water: poor Octanol/water partition coefficient as log Pow: 6.36
ENVIRONMENTAL DATA	The substance is very toxic to aquatic organisms. This substance may be hazardous to the environment; special attention should be given to birds. Bioaccumulation of this chemical may occur along the food chain, for example in milk and aquatic organisms. This substance does enter the environment under normal use. Great care, however, should be given to avoid any additional release, e.g. through inappropriate disposal.	

NOTES

Depending on the degree of exposure, periodic medical examination is indicated. Carrier solvents used in commercial formulations may change physical and toxicological properties. Do NOT take working clothes home. Consult national legislation. Agritan, Aztox, Anofex, Inodex, Gesapon, Gesarex, Gesarol, Guesapon, Clofenotane, Zeidane, Dicophane, Neocid are trade names.

Transport Emergency Card: TEC (R)-61GT7-III

ADDITIONAL INFORMATION

DDT

ICSC: 0034

(C) IPCS, CEC, 1994

IMPORTANT LEGAL NOTICE: Neither NIOSH, the CEC or the IPCS nor any person acting on behalf of NIOSH, the CEC or the IPCS is responsible for the use which might be made of this information. This card contains the collective views of the IPCS Peer Review Committee and may not reflect in all cases all the detailed requirements included in national legislation on the subject. The user should verify compliance of the cards with the relevant legislation in the country of use. The only modifications made to produce the U.S. version is inclusion of the OSHA PELs, NIOSH RELs and NIOSH IDLH values.

International Chemical Safety Cards

SILVER

ICSC: 0810

Argentium
C.I. 77820
Ag

ICSC # 0810
CAS # 7440-22-4
RTECS # VW3500000
September 10, 1997 Validated

TYPES OF HAZARD/ EXPOSURE	ACUTE HAZARDS/ SYMPTOMS	PREVENTION	FIRST AID/ FIRE FIGHTING
FIRE	Not combustible, except as powder.		
EXPLOSION			
EXPOSURE		PREVENT DISPERSION OF DUST!	
•INHALATION		Local exhaust or breathing protection.	Fresh air, rest.
•SKIN		Protective gloves.	Rinse skin with plenty of water or shower.
•EYES		Safety spectacles, or eye protection in combination with breathing protection if powder.	First rinse with plenty of water for several minutes (remove contact lenses if easily possible), then take to a doctor.
•INGESTION		Do not eat, drink, or smoke during work.	

SPILLAGE DISPOSAL	STORAGE	PACKAGING & LABELLING
Sweep spilled substance into containers; if appropriate, moisten first to prevent dusting. Carefully collect remainder, then remove to safe place. Do NOT let this chemical enter the environment.	Separated from ammonia, strong hydrogen peroxide solutions, strong acids.	

SEE IMPORTANT INFORMATION ON BACK

ICSC: 0810

Prepared in the context of cooperation between the International Programme on Chemical Safety & the Commission of the European Communities (C) IPCS CEC 1994. No modifications to the International version have been made except to add the OSHA PELs, NIOSH RELs and NIOSH IDLH values

International Chemical Safety Cards

ICSC: 0810

SILVER

IMPORTANT	**PHYSICAL STATE; APPEARANCE:** WHITE METAL, TURNS DARK ON EXPOSURE TO OZONE, HYDROGEN SULFIDE OR SULFUR.
	PHYSICAL DANGERS:
	CHEMICAL DANGERS: Shock-sensitive compounds are formed with acetylene. Reacts with acids causing fire hazard. Contact with strong hydrogen peroxide solution will cause violent decomposition to oxygen gas. Contact with ammonia may cause formation of compounds that are explosive when dry.
	OCCUPATIONAL EXPOSURE LIMITS: TLV (metal): 0.1 mg/m³ (ACGIH 1997). EU OEL: 0.1 mg/m³ as TWA (EU 2000). OSHA PEL: TWA 0.01 mg/m^3 NIOSH REL: TWA 0.01 mg/m^3 NIOSH IDLH: 10 mg/m^3 (as Ag) See: IDLH INDEX
	ROUTES OF EXPOSURE: The substance can be absorbed into the body by inhalation and by ingestion.
	INHALATION RISK: Evaporation at 20°C is negligible; a harmful concentration of airborne particles can, however, be reached quickly when dispersed.
	EFFECTS OF SHORT-TERM EXPOSURE: Inhalation of high amounts of metallic silver vapours may cause lung damage with pulmonary oedema.
	EFFECTS OF LONG-TERM OR REPEATED EXPOSURE: The substance may cause a grey-blue discoloration of the eyes, nose, throat and skin (argyria/argyrosis).

PHYSICAL PROPERTIES	Boiling point: 2212°C Melting point: 962°C Relative density (water = 1): 10.5 Solubility in water: none
ENVIRONMENTAL DATA	This substance may be hazardous to the environment; special attention should be given to aquatic organisms.

NOTES

Card has been partially updated in March 2008: see Occupational Exposure Limits.

ADDITIONAL INFORMATION

ICSC: 0810 SILVER

(C) IPCS, CEC, 1994

IMPORTANT LEGAL NOTICE: Neither NIOSH, the CEC or the IPCS nor any person acting on behalf of NIOSH, the CEC or the IPCS is responsible for the use which might be made of this information. This card contains the collective views of the IPCS Peer Review Committee and may not reflect in all cases all the detailed requirements included in national legislation on the subject. The user should verify compliance of the cards with the relevant legislation in the country of use. The only modifications made to produce the U.S. version is inclusion of the OSHA PELs, NIOSH RELs and NIOSH IDLH values.

International Chemical Safety Cards

BARIUM

ICSC: 1052

Ba
Atomic mass: 137.3

ICSC # 1052
CAS # 7440-39-3
RTECS # CQ8370000
UN # 1400
October 20, 1999 Validated

TYPES OF HAZARD/ EXPOSURE	ACUTE HAZARDS/ SYMPTOMS	PREVENTION	FIRST AID/ FIRE FIGHTING
FIRE	Flammable. Many reactions may cause fire or explosion.	NO open flames, NO sparks, and NO smoking. NO contact with water.	Special powder, dry sand, NO hydrous agents. NO water.
EXPLOSION	Finely dispersed particles form explosive mixtures in air.	Prevent deposition of dust; closed system, dust explosion-proof electrical equipment and lighting.	
EXPOSURE		PREVENT DISPERSION OF DUST! STRICT HYGIENE!	
•INHALATION	Cough. Sore throat.	Local exhaust or breathing protection.	Fresh air, rest. Refer for medical attention.
•SKIN	Redness.	Protective gloves.	Remove contaminated clothes. Rinse skin with plenty of water or shower. Refer for medical attention.
•EYES	Redness. Pain.	Safety goggles.	First rinse with plenty of water for several minutes (remove contact lenses if easily possible), then take to a doctor.
•INGESTION		Do not eat, drink, or smoke during work.	Rinse mouth. Refer for medical attention.

SPILLAGE DISPOSAL	STORAGE	PACKAGING & LABELLING
Sweep spilled substance into sealable containers. Carefully collect remainder, then remove to safe place. Chemical protection suit including self-contained breathing apparatus. Do NOT wash away into sewer.	Separated from halogenated solvents, strong oxidants, acids. Dry. Keep under inert gas, oil or oxygen-free liquid.	UN Hazard Class: 4.3 UN Packing Group: II

SEE IMPORTANT INFORMATION ON BACK

ICSC: 1052

Prepared in the context of cooperation between the International Programme on Chemical Safety & the Commission of the European Communities (C) IPCS CEC 1994. No modifications to the International version have been made except to add the OSHA PELs, NIOSH RELs and NIOSH IDLH values.

International Chemical Safety Cards

BARIUM

ICSC: 1052

I M P O R T A N T D A T A	**PHYSICAL STATE; APPEARANCE:** YELLOWISH TO WHITE LUSTROUS SOLID IN VARIOUS FORMS. **PHYSICAL DANGERS:** Dust explosion possible if in powder or granular form, mixed with air. **CHEMICAL DANGERS:** The substance may spontaneously ignite on contact with air (if in powder form). The substance is a strong reducing agent and reacts violently with oxidants and acids. Reacts violently with halogenated solvents. Reacts with water, forming flammable/explosive gas (hydrogen - see ICSC0001), causing fire and explosion hazard. **OCCUPATIONAL EXPOSURE LIMITS:** TLV: 0.5 mg/m³ (as TWA) (ACGIH 1999).	**ROUTES OF EXPOSURE:** The substance can be absorbed into the body by ingestion. **INHALATION RISK:** **EFFECTS OF SHORT-TERM EXPOSURE:** The substance irritates the eyes, the skin and the respiratory tract. **EFFECTS OF LONG-TERM OR REPEATED EXPOSURE:**
PHYSICAL PROPERTIES	Boiling point: 1640°C Melting point: 725°C Density: 3.6 g/cm³	Solubility in water: reaction
ENVIRONMENTAL DATA		

NOTES

Reacts violently with fire extinguishing agents such as water, bicarbonate, powder, foam, and carbon dioxide. Rinse contaminated clothes (fire hazard) with plenty of water.

Transport Emergency Card: TEC (R)-43G12

ADDITIONAL INFORMATION

(C) IPCS, CEC, 1994

IMPORTANT LEGAL Neither NIOSH, the CEC or the IPCS nor any person acting on behalf of NIOSH, the CEC or the IPCS is responsible for the use which might be made of this information. This card contains the collective views

NOTICE:	of the IPCS Peer Review Committee and may not reflect in all cases all the detailed requirements included in national legislation on the subject. The user should verify compliance of the cards with the relevant legislation in the country of use. The only modifications made to produce the U.S. version is inclusion of the OSHA PELs, NIOSH RELs and NIOSH IDLH values.

International Chemical Safety Cards

ICSC: 0020

CADMIUM

UNEP

National Institute for Occupational Safety and Health NIOSH

Cd
Atomic mass: 112.4

ICSC # 0020
CAS # 7440-43-9
RTECS # EU9800000
UN # 2570
EC # 048-002-00-0
April 22, 2005 Validated

TYPES OF HAZARD/ EXPOSURE	ACUTE HAZARDS/ SYMPTOMS	PREVENTION	FIRST AID/ FIRE FIGHTING
FIRE	Flammable in powder form and spontaneously combustible in pyrophoric form. Gives off irritating or toxic fumes (or gases) in a fire.	NO open flames, NO sparks, and NO smoking. NO contact with heat or acid(s).	Dry sand. Special powder. NO other agents.
EXPLOSION	Finely dispersed particles form explosive mixtures in air.	Prevent deposition of dust; closed system. dust explosion-proof electrical equipment and lighting.	
EXPOSURE		PREVENT DISPERSION OF DUST! AVOID ALL CONTACT!	IN ALL CASES CONSULT A DOCTOR!
•INHALATION	Cough. Sore throat.	Local exhaust or breathing protection.	Fresh air, rest. Refer for medical attention.
•SKIN		Protective gloves.	Remove contaminated clothes. Rinse and then wash skin with water and soap.
•EYES	Redness. Pain.	Safety goggles or eye protection in combination with breathing protection.	First rinse with plenty of water for several minutes (remove contact lenses if easily possible), then take to a doctor.
•INGESTION	Abdominal pain. Diarrhoea. Headache. Nausea. Vomiting.	Do not eat, drink, or smoke during work.	Rest. Refer for medical attention.

SPILLAGE DISPOSAL	STORAGE	PACKAGING & LABELLING
Evacuate danger area! Personal protection: chemical protection suit including self-contained breathing apparatus. Remove all ignition sources. Sweep spilled substance into containers. Carefully collect remainder, then remove to safe place.	Fireproof. Dry. Keep under inert gas. Separated from ignition sources, oxidants acids, food and feedstuffs	Airtight. Unbreakable packaging; put breakable packaging into closed unbreakable container. Do not transport with food and feedstuffs. Note: E. T+ symbol N symbol

	R: 45-26-48/23/25-62-63-68-50/53 S: 53-45-60-61 UN Hazard Class: 6.1

SEE IMPORTANT INFORMATION ON BACK

ICSC: 0020	Prepared in the context of cooperation between the International Programme on Chemical Safety & the Commission of the European Communities (C) IPCS CEC 1994 No modifications to the International version have been made except to add the OSHA PELs, NIOSH RELs and NIOSH IDLH values

International Chemical Safety Cards

CADMIUM

ICSC: 0020

I M P O R T A N T D A T A

PHYSICAL STATE; APPEARANCE:
SOFT BLUE-WHITE METAL LUMPS OR GREY POWDER. MALLEABLE. TURNS BRITTLE ON EXPOSURE TO 80°C AND TARNISHES ON EXPOSURE TO MOIST AIR.

PHYSICAL DANGERS:
Dust explosion possible if in powder or granular form, mixed with air.

CHEMICAL DANGERS:
Reacts with acids forming flammable/explosive gas (hydrogen - see ICSC0001). Dust reacts with oxidants, hydrogen azide, zinc, selenium or tellurium , causing fire and explosion hazard.

OCCUPATIONAL EXPOSURE LIMITS:
TLV: (Total dust) 0.01 mg/m³ (Respirable fraction)
0.002 mg/m³ as TWA A2 (suspected human carcinogen); BEI issued (ACGIH 2005).
MAK: skin absorption (H);
Carcinogen category: 1; Germ cell mutagen group: 3A;
(DFG 2004).
OSHA PEL*: 1910.1027 TWA 0.005 mg/m^3
*Note: The PEL applies to all Cadmium compounds (as Cd).
NIOSH REL*: Ca See Appendix A *Note: The REL applies to all Cadmium compounds (as Cd).
NIOSH IDLH: Ca 9 mg/m^3 (as Cd) See: IDLH INDEX

ROUTES OF EXPOSURE:
The substance can be absorbed into the body by inhalation of its aerosol and by ingestion.

INHALATION RISK:
A harmful concentration of airborne particles can be reached quickly when dispersed, especially if powdered.

EFFECTS OF SHORT-TERM EXPOSURE:
The fume is irritating to the respiratory tract Inhalation of fume may cause lung oedema (see Notes). Inhalation of fumes may cause metal fume fever. The effects may be delayed. Medical observation is indicated.

EFFECTS OF LONG-TERM OR REPEATED EXPOSURE:
Lungs may be affected by repeated or prolonged exposure to dust particles. The substance may have effects on the kidneys , resulting in kidney impairment This substance is carcinogenic to humans.

PHYSICAL PROPERTIES

Boiling point: 765°C
Melting point: 321°C
Density: 8.6 g/cm³

Solubility in water: none
Auto-ignition temperature: (cadmium metal dust) 250°C

ENVIRONMENTAL DATA

NOTES

Reacts violently with fire extinguishing agents such as water,foam,carbon dioxideand halons. Depending on the degree of exposure, periodic medical examination is indicated. The symptoms of lung oedema often do not become manifest until a few hours have passed and they are aggravated by physical effort. Rest and medical observation are therefore essential. Do NOT take working clothes home. Cadmium also exists in a pyrophoric form (EC No. 048-011-00-X), which bears the additional EU labelling symbol F, R phrase 17, and S phrases 7/8 and 43. UN numbers and packing group will vary according to the physical form of the substance.

ADDITIONAL INFORMATION

ICSC: 0020 **CADMIUM**

(C) IPCS, CEC, 1994

IMPORTANT LEGAL NOTICE: Neither NIOSH, the CEC or the IPCS nor any person acting on behalf of NIOSH, the CEC or the IPCS is responsible for the use which might be made of this information. This card contains the collective views of the IPCS Peer Review Committee and may not reflect in all cases all the detailed requirements included in national legislation on the subject. The user should verify compliance of the cards with the relevant legislation in the country of use. The only modifications made to produce the U.S. version is inclusion of the OSHA PELs, NIOSH RELs and NIOSH IDLH values.

International Chemical Safety Cards

SELENIUM

ICSC: 0072

Se
(powder)

ICSC # 0072
CAS # 7782-49-2
RTECS # VS7700000
EC # 034-001-00-2
April 26, 1993 Validated

TYPES OF HAZARD/ EXPOSURE	ACUTE HAZARDS/ SYMPTOMS	PREVENTION	FIRST AID/ FIRE FIGHTING
FIRE	Combustible. Gives off irritating or toxic fumes (or gases) in a fire.	NO open flames. NO contact with oxidants.	Powder, AFFF, foam, carbon dioxide. NO water
EXPLOSION	Risk of fire and explosion on contact with oxidants.		
EXPOSURE		PREVENT DISPERSION OF DUST! STRICT HYGIENE!	
•INHALATION	Irritation of nose. Cough. Dizziness. Headache. Laboured breathing. Nausea. Sore throat. Vomiting. Weakness. Symptoms may be delayed (see Notes).	Ventilation, local exhaust, or breathing protection.	Fresh air, rest. Refer for medical attention.
•SKIN	Redness. Skin burns. Pain. Discolouration.	Protective gloves. Protective clothing.	Rinse skin with plenty of water or shower. Refer for medical attention. Remove and isolate contaminated clothes.
•EYES	Redness. Pain. Blurred vision.	Safety spectacles or eye protection in combination with breathing protection.	First rinse with plenty of water for several minutes (remove contact lenses if easily possible), then take to a doctor.
•INGESTION	Metallic taste. Diarrhoea. Chills. Fever. (Further see Inhalation).	Do not eat, drink, or smoke during work.	Rinse mouth. Induce vomiting (ONLY IN CONSCIOUS PERSONS!). Refer for medical attention.

SPILLAGE DISPOSAL	STORAGE	PACKAGING & LABELLING
Do NOT wash away into sewer. Sweep spilled substance into containers; if appropriate, moisten first to prevent dusting. Carefully collect remainder, then remove to safe place. Personal protection: P3 filter respirator for toxic particles.	Fireproof. Separated from strong oxidants, strong acids, food and feedstuffs Dry.	Airtight. Do not transport with food and feedstuffs. T symbol R: 23/25-33-53 S: 1/2-20/21-28-45-61

SEE IMPORTANT INFORMATION ON BACK

ICSC: 0072

Prepared in the context of cooperation between the International Programme on Chemical Safety & the Commission of the European Communities (C) IPCS CEC 1994 No modifications to the international version have been made except to add the OSHA PELs, NIOSH RELs and NIOSH IDLH values

International Chemical Safety Cards

SELENIUM

ICSC: 0072

IMPORTANT

PHYSICAL STATE; APPEARANCE:
ODOURLESS SOLID IN VARIOUS FORMS. DARK RED-BROWN TO BLUISH-BLACK AMORPHOUS SOLID OR RED TRANSPARENT CRYSTALS OR METALLIC GREY TO BLACK CRYSTALS.

PHYSICAL DANGERS:

CHEMICAL DANGERS:
Upon heating, toxic fumes are formed. Reacts violently with oxidants strong acids Reacts withwater at 50°C forming flammable/explosive gas (hydrogen - see ICSC0001) and selenious acids. Reacts with incandescence on gentle heating with phosphorous and metals such as nickel, zinc, sodium, potassium, platinum.

OCCUPATIONAL EXPOSURE LIMITS:
TLV: 0.2 mg/m³ as TWA (ACGIH 2004).
MAK: (Inhalable fraction) 0.05 mg/m³
Peak limitation category: II(4): Carcinogen category: 3B; Pregnancy risk group: C; (DFG 2004).
OSHA PEL*: TWA 0.2 mg/m^3 *Note: The PEL also applies to other selenium compounds (as Se) except Selenium hexafluoride.
NIOSH REL*: TWA 0.2 mg/m^3 *Note: The REL also applies to other selenium compounds (as Se) except Selenium hexafluoride.
NIOSH IDLH: 1 mg/m^3 (as Se) See: 7782492

ROUTES OF EXPOSURE:
The substance can be absorbed into the body by inhalation, through the skin and by ingestion.

INHALATION RISK:
Evaporation at 20°C is negligible; a harmful concentration of airborne particles can, however, be reached quickly when dispersed.

EFFECTS OF SHORT-TERM EXPOSURE:
The substance is irritating to the eyes and the respiratory tract Inhalation of dust may cause lung oedema (see Notes). Inhalation of fume may cause symptoms of asphyxiation, chills and fever and bronchitis. The effects may be delayed.

EFFECTS OF LONG-TERM OR REPEATED EXPOSURE:
Repeated or prolonged contact with skin may cause dermatitis. The substance may have effects on the respiratory tract, gastrointestinal tract, and skin, resulting in nausea, vomiting, cough, yellowish skin discolouration, loss of nails, garlic breath and bad teeth.

PHYSICAL PROPERTIES

Boiling point: 685°C
Melting point: 170-217°C
Relative density (water = 1): 4.8
Solubility in water: none
Vapour pressure, Pa at 20°C: 0.1

ENVIRONMENTAL DATA

NOTES

Do NOT take working clothes home.

ADDITIONAL INFORMATION

ICSC: 0072	SELENIUM

(C) IPCS, CEC, 1994

IMPORTANT LEGAL NOTICE:	Neither NIOSH, the CEC or the IPCS nor any person acting on behalf of NIOSH, the CEC or the IPCS is responsible for the use which might be made of this information. This card contains the collective views of the IPCS Peer Review Committee and may not reflect in all cases all the detailed requirements included in national legislation on the subject. The user should verify compliance of the cards with the relevant legislation in the country of use. The only modifications made to produce the U.S. version is inclusion of the OSHA PELs, NIOSH RELs and NIOSH IDLH values.

International Chemical Safety Cards

LEAD

ICSC: 0052

UNEP

National Institute for Occupational Safety and Health NIOSH

Lead metal
Plumbum
Pb
(powder)

ICSC # 0052
CAS # 7439-92-1
RTECS # OF7525000
August 10, 2002 Validated

TYPES OF HAZARD/ EXPOSURE	ACUTE HAZARDS/ SYMPTOMS	PREVENTION	FIRST AID/ FIRE FIGHTING
FIRE	Not combustible. Gives off irritating or toxic fumes (or gases) in a fire.		In case of fire in the surroundings: use appropriate extinguishing media.
EXPLOSION	Finely dispersed particles form explosive mixtures in air.	Prevent deposition of dust; closed system, dust explosion-proof electrical equipment and lighting.	
EXPOSURE	See EFFECTS OF LONG-TERM OR REPEATED EXPOSURE.	PREVENT DISPERSION OF DUST! AVOID EXPOSURE OF (PREGNANT) WOMEN!	
•INHALATION		Local exhaust or breathing protection.	Fresh air, rest.
•SKIN		Protective gloves.	Remove contaminated clothes. Rinse and then wash skin with water and soap.
•EYES		Safety spectacles.	First rinse with plenty of water for several minutes (remove contact lenses if easily possible), then take to a doctor.
•INGESTION	Abdominal pain. Nausea. Vomiting.	Do not eat, drink, or smoke during work. Wash hands before eating.	Rinse mouth. Give plenty of water to drink. Refer for medical attention.

SPILLAGE DISPOSAL	STORAGE	PACKAGING & LABELLING
Sweep spilled substance into containers; if appropriate, moisten first to prevent dusting. Carefully collect remainder, then remove to safe place. Do NOT let this chemical enter the environment. Personal protection: P3 filter respirator for toxic particles.	Separated from food and feedstuffs incompatible materials See Chemical Dangers.	

SEE IMPORTANT INFORMATION ON BACK

ICSC: 0052

Prepared in the context of cooperation between the International Programme on Chemical Safety & the Commission of the European Communities (C) IPCS CEC 1994 No modifications to the international version have been made except to add the OSHA PELs, NIOSH RELs and NIOSH IDLH values

International Chemical Safety Cards

LEAD

ICSC: 0052

I M P O R T A N T D A T A	**PHYSICAL STATE; APPEARANCE:** BLUISH-WHITE OR SILVERY-GREY SOLID IN VARIOUS FORMS. TURNS TARNISHED ON EXPOSURE TO AIR. **PHYSICAL DANGERS:** Dust explosion possible if in powder or granular form, mixed with air. **CHEMICAL DANGERS:** On heating, toxic fumes are formed. Reacts with oxidants. Reacts with hot concentrated nitric acid, boiling concentrated hydrochloric acid and sulfuric acid. Attacked by pure water and by weak organic acids in the presence of oxygen. **OCCUPATIONAL EXPOSURE LIMITS:** TLV: 0.05 mg/m³ as TWA A3 (confirmed animal carcinogen with unknown relevance to humans); BEI issued (ACGIH 2004). MAK: Carcinogen category: 2; Germ cell mutagen group: 3A; (DFG 2006). EU OEL: as TWA 0.15 mg/m³ (EU 2002). OSHA PEL*: 1910.1025 TWA 0.050 mg/m^3 See Appendix C *Note: The PEL also applies to other lead compounds (as Pb) – see Appendix C. NIOSH REL*: TWA 0.050 mg/m^3 See Appendix C *Note: The REL also applies to other lead compounds (as Pb) – see Appendix C. NIOSH IDLH: 100 mg/m^3 (as Pb) See: 7439921	**ROUTES OF EXPOSURE:** The substance can be absorbed into the body by inhalation and by ingestion. **INHALATION RISK:** A harmful concentration of airborne particles can be reached quickly when dispersed, especially if powdered. **EFFECTS OF SHORT-TERM EXPOSURE:** **EFFECTS OF LONG-TERM OR REPEATED EXPOSURE:** The substance may have effects on the blood bone marrow central nervous system peripheral nervous system kidneys , resulting in anaemia, encephalopathy (e.g., convulsions), peripheral nerve disease, abdominal cramps and kidney impairment. Causes toxicity to human reproduction or development. This substance is probably carcinogenic to humans. fast track change Oct 06 - IARC 2A.
PHYSICAL PROPERTIES	Boiling point: 1740°C Melting point: 327.5°C	Density: 11.34 g/cm³ Solubility in water: none
ENVIRONMENTAL DATA	Bioaccumulation of this chemical may occur in plants and in mammals. It is strongly advised that this substance does not enter the environment.	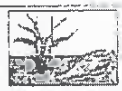

NOTES

Depending on the degree of exposure, periodic medical examination is suggested. Do NOT take working clothes home. Card has been partly updated in April 2005. See section Occupational Exposure Limits. Card has been partly updated in October 2006: see section Occupational Exposure Limits, Effects Long Tem Exposure.

ADDITIONAL INFORMATION	
ICSC: 0052	LEAD

(C) IPCS, CEC, 1994

IMPORTANT LEGAL NOTICE:	Neither NIOSH, the CEC or the IPCS nor any person acting on behalf of NIOSH, the CEC or the IPCS is responsible for the use which might be made of this information. This card contains the collective views of the IPCS Peer Review Committee and may not reflect in all cases all the detailed requirements included in national legislation on the subject. The user should verify compliance of the cards with the relevant legislation in the country of use. The only modifications made to produce the U.S. version is inclusion of the OSHA PELs, NIOSH RELs and NIOSH IDLH values.

International Chemical Safety Cards

MERCURY

ICSC: 0056

Quicksilver
Liquid silver
Hg

ICSC # 0056
CAS # 7439-97-6
RTECS # OV4550000
UN # 2809
EC # 080-001-00-0
April 22, 2004 Validated

TYPES OF HAZARD/ EXPOSURE	ACUTE HAZARDS/ SYMPTOMS	PREVENTION	FIRST AID/ FIRE FIGHTING
FIRE	Not combustible. Gives off irritating or toxic fumes (or gases) in a fire.		In case of fire in the surroundings: use appropriate extinguishing media.
EXPLOSION	Risk of fire and explosion.		In case of fire: keep drums, etc., cool by spraying with water.
EXPOSURE		STRICT HYGIENE! AVOID EXPOSURE OF (PREGNANT) WOMEN! AVOID EXPOSURE OF ADOLESCENTS AND CHILDREN!	IN ALL CASES CONSULT A DOCTOR!
•INHALATION	Abdominal pain. Cough. Diarrhoea. Shortness of breath. Vomiting. Fever or elevated body temperature.	Local exhaust or breathing protection.	Fresh air, rest. Artificial respiration if indicated. Refer for medical attention.
•SKIN	MAY BE ABSORBED! Redness.	Protective gloves. Protective clothing.	Remove contaminated clothes. Rinse and then wash skin with water and soap. Refer for medical attention.
•EYES		Face shield, or eye protection in combination with breathing protection.	First rinse with plenty of water for several minutes (remove contact lenses if easily possible), then take to a doctor.
•INGESTION		Do not eat, drink, or smoke during work. Wash hands before eating.	Refer for medical attention.

SPILLAGE DISPOSAL	STORAGE	PACKAGING & LABELLING
Evacuate danger area in case of a large spill! Consult an expert! Ventilation. Collect leaking and spilled liquid in	Provision to contain effluent from fire extinguishing. Separated from food and feedstuffs. Well closed.	Special material. Do not transport with food and feedstuffs. T symbol

sealable non-metallic containers as far as possible. Do NOT wash away into sewer. Do NOT let this chemical enter the environment. Chemical protection suit including self-contained breathing apparatus.		N symbol R: 23-33-50/53 S: 1/2-7-45-60-61 UN Hazard Class: 8 UN Packing Group: III

SEE IMPORTANT INFORMATION ON BACK

ICSC: 0056

Prepared in the context of cooperation between the International Programme on Chemical Safety & the Commission of the European Communities (C) IPCS CEC 1994. No modifications to the International version have been made except to add the OSHA PELs, NIOSH RELs and NIOSH IDLH values.

International Chemical Safety Cards

MERCURY

ICSC: 0056

I M P O R T A N T D A T A	**PHYSICAL STATE; APPEARANCE:** ODOURLESS, HEAVY AND MOBILE SILVERY LIQUID METAL. **PHYSICAL DANGERS:** **CHEMICAL DANGERS:** Upon heating, toxic fumes are formed. Reacts violently with ammonia and halogens causing fire and explosion hazard. Attacks aluminium and many other metals forming amalgams. **OCCUPATIONAL EXPOSURE LIMITS:** TLV: 0.025 mg/m³ as TWA (skin) A4 BEI issued (ACGIH 2004). MAK: 0.1 mg/m³ Sh Peak limitation category: II(8) Carcinogen category: 3B (DFG 2003). OSHA PEL†: C 0.1 mg/m³ NIOSH REL: Hg Vapor: TWA 0.05 mg/m³ skin Other: C 0.1 mg/m³ skin NIOSH IDLH: 10 mg/m³ (as Hg) See: 7439976
	ROUTES OF EXPOSURE: The substance can be absorbed into the body by inhalation of its vapour and through the skin, also as a vapour! **INHALATION RISK:** A harmful contamination of the air can be reached very quickly on evaporation of this substance at 20°C. **EFFECTS OF SHORT-TERM EXPOSURE:** The substance is irritating to the skin. Inhalation of the vapours may cause pneumonitis. The substance may cause effects on the central nervous systemandkidneys. The effects may be delayed. Medical observation is indicated. **EFFECTS OF LONG-TERM OR REPEATED EXPOSURE:** The substance may have effects on the central nervous system kidneys, resulting in irritability, emotional instability, tremor, mental and memory disturbances, speech disorders. Danger of cumulative effects. Animal tests show that this substance possibly causes toxic effects upon human reproduction.
PHYSICAL PROPERTIES	Boiling point: 357°C Melting point: -39°C Relative density (water = 1): 13.5 Solubility in water: none Vapour pressure, Pa at 20°C: 0.26 Relative vapour density (air = 1): 6.93 Relative density of the vapour/air-mixture at 20°C (air = 1): 1.009
ENVIRONMENTAL DATA	The substance is very toxic to aquatic organisms. In the food chain important to humans, bioaccumulation takes place, specifically in fish.

NOTES

Depending on the degree of exposure, periodic medical examination is indicated. No odour warning if toxic concentrations are present. Do NOT take working clothes home.

Transport Emergency Card: TEC (R)-80GC9-II+III

ADDITIONAL INFORMATION

ICSC: 0056 **MERCURY**

(C) IPCS, CEC, 1994

IMPORTANT LEGAL NOTICE: Neither NIOSH, the CEC or the IPCS nor any person acting on behalf of NIOSH, the CEC or the IPCS is responsible for the use which might be made of this information. This card contains the collective views of the IPCS Peer Review Committee and may not reflect in all cases all the detailed requirements included in national legislation on the subject. The user should verify compliance of the cards with the relevant legislation in the country of use. The only modifications made to produce the U.S. version is inclusion of the OSHA PELs, NIOSH RELs and NIOSH IDLH values.

International Chemical Safety Cards

ICSC: 0013

ARSENIC

UNEP

NIOSH National Institute for Occupational Safety and Health

Grey arsenic
As
Atomic mass: 74.9

ICSC # 0013
CAS # 7440-38-2
RTECS # CG0525000
UN # 1558
EC # 033-001-00-X
October 18, 1999 Validated

TYPES OF HAZARD/ EXPOSURE	ACUTE HAZARDS/ SYMPTOMS	PREVENTION	FIRST AID/ FIRE FIGHTING
FIRE	Combustible. Gives off irritating or toxic fumes (or gases) in a fire.	NO open flames. NO contact with strong oxidizers. NO contact with hot surfaces.	Powder, water spray, foam, carbon dioxide.
EXPLOSION	Risk of fire and explosion is slight when exposed to hot surfaces or flames in the form of fine powder or dust.	Prevent deposition of dust; closed system, dust explosion-proof electrical equipment and lighting.	
EXPOSURE		PREVENT DISPERSION OF DUST! AVOID ALL CONTACT! AVOID EXPOSURE OF (PREGNANT) WOMEN!	IN ALL CASES CONSULT A DOCTOR!
•INHALATION	Cough. Sore throat. Shortness of breath. Weakness. See Ingestion.	Closed system and ventilation.	Fresh air, rest. Artificial respiration may be needed. Refer for medical attention.
•SKIN	Redness.	Protective gloves. Protective clothing.	Remove contaminated clothes. Rinse skin with plenty of water or shower.
•EYES	Redness.	Face shield or eye protection in combination with breathing protection if powder.	First rinse with plenty of water for several minutes (remove contact lenses if easily possible), then take to a doctor.
•INGESTION	Abdominal pain. Diarrhoea. Nausea. Vomiting. Burning sensation in the throat and chest. Shock or collapse. Unconsciousness.	Do not eat, drink, or smoke during work. Wash hands before eating.	Rinse mouth. Induce vomiting (ONLY IN CONSCIOUS PERSONS!). Refer for medical attention.

SPILLAGE DISPOSAL	STORAGE	PACKAGING & LABELLING

Evacuate danger area! Sweep spilled substance into sealable containers. Carefully collect remainder, then remove to safe place. Chemical protection suit including self-contained breathing apparatus. Do NOT let this chemical enter the environment.	Separated from strong oxidants, acids, halogens, food and feedstuffs. Well closed.	Do not transport with food and feedstuffs. Marine pollutant. T symbol N symbol R: 23/25-50/53 S: 1/2-20/21-28-45-60-61 UN Hazard Class: 6.1 UN Packing Group: II

SEE IMPORTANT INFORMATION ON BACK

ICSC: 0013

Prepared in the context of cooperation between the International Programme on Chemical Safety & the Commission of the European Communities (C) IPCS CEC 1994. No modifications to the International version have been made except to add the OSHA PELs, NIOSH RELs and NIOSH IDLH values

International Chemical Safety Cards

ARSENIC

ICSC: 0013

I
M
P
O
R
T
A
N
T

D
A
T
A

PHYSICAL STATE; APPEARANCE:
ODOURLESS, BRITTLE, GREY, METALLIC-LOOKING CRYSTALS.

PHYSICAL DANGERS:

CHEMICAL DANGERS:
Upon heating, toxic fumes are formed. Reacts violently with strong oxidants and halogens, causing fire and explosion hazard. Reacts with acids to produce

OCCUPATIONAL EXPOSURE LIMITS:
OSHA PEL: 1910.1018 TWA 0.010 mg/m^3
NIOSH REL: Ca C 0.002 mg/m^3 15-minute See Appendix A
NIOSH IDLH: Ca 5 mg/m^3 (as As) See: 7440382
TLV: 0.01 mg/m^3 as TWA A1 (confirmed human carcinogen); BEI issued (ACGIH 2004).
MAK:
Carcinogen category: 1; Germ cell mutagen group: 3A;
(DFG 2004).

ROUTES OF EXPOSURE:
The substance can be absorbed into the body by inhalation of its aerosol and by ingestion.

INHALATION RISK:
Evaporation at 20°C is negligible; a harmful concentration of airborne particles can, however, be reached quickly, when dispersed.

EFFECTS OF SHORT-TERM EXPOSURE:
The substance is irritating to the eyes the skin and the respiratory tract. The substance may cause effects on the gastrointestinal tract cardiovascular system central nervous system kidneys , resulting in severe gastroenteritis, loss of fluid, and electrolytes, cardiac disorders shock convulsions and kidney impairment Exposure above the OEL may result in death. The effects may be delayed. Medical observation is indicated.

EFFECTS OF LONG-TERM OR REPEATED EXPOSURE:
Repeated or prolonged contact with skin may cause dermatitis. The substance may have effects on the mucous membranes, skin, peripheral nervous system liver bone marrow , resulting in pigmentation disorders, hyperkeratosis, perforation of nasal septum, neuropathy, liver impairment anaemia This substance is carcinogenic to humans. Animal tests show that this substance possibly causes toxicity to human reproduction or development.

PHYSICAL PROPERTIES		
	Sublimation point: 613°C Density: 5.7 g/cm^3	Solubility in water: none

ENVIRONMENTAL DATA	The substance is toxic to aquatic organisms. It is strongly advised that this substance does not enter the environment.

NOTES

The substance is combustible but no flash point is available in literature. Depending on the degree of exposure, periodic medical examination is suggested. Do NOT take working clothes home. Refer also to cards for specific arsenic compounds, e.g., Arsenic pentoxide (ICSC 0377), Arsenic trichloride (ICSC 0221), Arsenic trioxide (ICSC 0378), Arsine (ICSC 0222).

Transport Emergency Card: TEC (R)-61GT5-II

ADDITIONAL INFORMATION

ICSC: 0013 **ARSENIC**

(C) IPCS, CEC, 1994

IMPORTANT LEGAL NOTICE: Neither NIOSH, the CEC or the IPCS nor any person acting on behalf of NIOSH, the CEC or the IPCS is responsible for the use which might be made of this information. This card contains the collective views of the IPCS Peer Review Committee and may not reflect in all cases all the detailed requirements included in national legislation on the subject. The user should verify compliance of the cards with the relevant legislation in the country of use. The only modifications made to produce the U.S. version is inclusion of the OSHA PELs, NIOSH RELs and NIOSH IDLH values.

International Chemical Safety Cards

CHROMIUM

ICSC: 0029

Chrome
Cr
Atomic mass: 52.0
(powder)

ICSC # 0029
CAS # 7440-47-3
RTECS # GB4200000
October 27, 2004 Validated

TYPES OF HAZARD/ EXPOSURE	ACUTE HAZARDS/ SYMPTOMS	PREVENTION	FIRST AID/ FIRE FIGHTING
FIRE	Combustible under specific conditions.	No open flames if in powder form.	In case of fire in the surroundings: use appropriate extinguishing media.
EXPLOSION		Prevent deposition of dust; closed system, dust explosion-proof electrical equipment and lighting.	
EXPOSURE		PREVENT DISPERSION OF DUST!	
•INHALATION	Cough.	Local exhaust or breathing protection.	Fresh air, rest.
•SKIN		Protective gloves.	Remove contaminated clothes. Rinse skin with plenty of water or shower.
•EYES	Redness.	Safety goggles.	First rinse with plenty of water for several minutes (remove contact lenses if easily possible), then take to a doctor.
•INGESTION		Do not eat, drink, or smoke during work.	Rinse mouth.

SPILLAGE DISPOSAL	STORAGE	PACKAGING & LABELLING
Sweep spilled substance into containers; if appropriate, moisten first to prevent dusting. Personal protection: P2 filter respirator for harmful particles.		

SEE IMPORTANT INFORMATION ON BACK

ICSC: 0029

Prepared in the context of cooperation between the International Programme on Chemical Safety & the Commission of the European Communities (C) IPCS CEC 1994. No modifications to the International version have been made except to add the OSHA PELs, NIOSH RELs and NIOSH IDLH values.

International Chemical Safety Cards

ICSC: 0029

CHROMIUM

I M P O R T A N T D A T A	**PHYSICAL STATE: APPEARANCE:** GREY POWDER **PHYSICAL DANGERS:** Dust explosion possible if in powder or granular form, mixed with air. **CHEMICAL DANGERS:** Chromium is a catalytic substance and may cause reaction in contact with many organic and inorganic substances , causing fire and explosion hazard. **OCCUPATIONAL EXPOSURE LIMITS:** TLV: (as Cr metal, Cr(III) compounds) 0.5 mg/m³ as TWA A4 (ACGIH 2004). MAK not established. OSHA PEL*: TWA 1 mg/m³ See Appendix C *Note: The PEL also applies to insoluble chromium salts. NIOSH REL: TWA 0.5 mg/m³ See Appendix C NIOSH IDLH: 250 mg/m³ (as Cr) See: 7440473	**ROUTES OF EXPOSURE:** **INHALATION RISK:** A harmful concentration of airborne particles can be reached quickly when dispersed. **EFFECTS OF SHORT-TERM EXPOSURE:** May cause mechanical irritation to the eyes and the respiratory tract. **EFFECTS OF LONG-TERM OR REPEATED EXPOSURE:**
PHYSICAL PROPERTIES	Boiling point: 2642°C Melting point: 1900°C Density: 7.15 g/cm³	Solubility in water: none
ENVIRONMENTAL DATA		

NOTES

The surface of the chromium particles is oxidized to chromium(III)oxide in air. See ICSC 1531 Chromium(III) oxide.

ADDITIONAL INFORMATION

(C) IPCS, CEC, 1994

IMPORTANT LEGAL NOTICE: Neither NIOSH, the CEC or the IPCS nor any person acting on behalf of NIOSH, the CEC or the IPCS is responsible for the use which might be made of this information. This card contains the collective views of the IPCS Peer Review Committee and may not reflect in all cases all the detailed requirements included in national legislation on the subject. The user should verify compliance of the cards with the relevant legislation in the country of use. The only modifications made to produce the U.S. version is inclusion of the OSHA PELs, NIOSH RELs and NIOSH IDLH values.

Appendix B

Respirator Fit Test Procedures

Appendix A to Sec. 1910.120--Personal Protective Equipment Test Methods

This appendix sets forth the non-mandatory examples of tests which may be used to evaluate compliance with Sec. 1910.120 (g)(4) (ii) and (iii). Other tests and other challenge agents may be used to evaluate compliance.

A. Totally-encapsulating chemical protective suit pressure test

1.0--Scope

1.1 This practice measures the ability of a gas tight totally-encapsulating chemical protective suit material, seams, and closures to maintain a fixed positive pressure. The results of this practice allow the gas tight integrity of a totally-encapsulating chemical protective suit to be evaluated.

1.2 Resistance of the suit materials to permeation, penetration, and degradation by specific hazardous substances is not determined by this test method.

2.0--Definition of terms

2.1 Totally-encapsulated chemical protective suit (TECP suit) means a full body garment which is constructed of protective clothing materials; covers the wearer's torso, head, arms, legs and respirator; may cover the wearer's hands and feet with tightly attached gloves and boots; completely encloses the wearer and respirator by itself or in combination with the wearer's gloves and boots.

2.2 Protective clothing material means any material or combination of materials used in an item of clothing for the purpose of isolating parts of the body from direct contact with a potentially hazardous liquid or gaseous chemicals.

2.3 Gas tight means, for the purpose of this test method, the limited flow of a gas under pressure from the inside of a TECP suit to atmosphere at a prescribed pressure and time interval.

3.0--Summary of test method

3.1 The TECP suit is visually inspected and modified for the test. The test apparatus is attached to the suit to permit inflation to

the pre-test suit expansion pressure for removal of suit wrinkles and creases. The pressure is lowered to the test pressure and monitored for three minutes. If the pressure drop is excessive, the TECP suit fails the test and is removed from service. The test is repeated after leak location and repair.

4.0--Required Supplies

4.1 Source of compressed air.

4.2 Test apparatus for suit testing, including a pressure measurement device with a sensitivity of at least \1/4\ inch water gauge.

4.3 Vent valve closure plugs or sealing tape.

4.4 Soapy water solution and soft brush.

4.5 Stop watch or appropriate timing device.

5.0--Safety Precautions

5.1 Care shall be taken to provide the correct pressure safety devices required for the source of compressed air used.

6.0--Test Procedure

6.1 Prior to each test, the tester shall perform a visual inspection of the suit. Check the suit for seam integrity by visually examining the

8.1.4 Records shall be kept for each pressure test even if repairs are being made at the test location.

Caution

Visually inspect all parts of the suit to be sure they are positioned correctly and secured tightly before putting the suit back into service. Special care should be taken to examine each exhaust valve to make sure it is not blocked.

Care should also be exercised to assure that the inside and outside of the suit is completely dry before it is put into storage.

B. Totally-encapsulating chemical protective suit qualitative leak test

1.0--Scope

1.1 This practice semi-qualitatively tests gas tight totally-encapsulating chemical protective suit integrity by detecting inward leakage of ammonia vapor. Since no modifications are made to the suit to carry out

this test, the results from this practice provide a realistic test for the integrity of the entire suit.

1.2 Resistance of the suit materials to permeation, penetration, and degradation is not determined by this test method. ASTM test methods are available to test suit materials for these characteristics and the tests are usually conducted by the manufacturers of the suits.

2.0--Definition of terms

2.1 Totally-encapsulated chemical protective suit (TECP suit) means a full body garment which is constructed of protective clothing materials; covers the wearer's torso, head, arms, legs and respirator; may cover the wearer's hands and feet with tightly attached gloves and boots; completely encloses the wearer and respirator by itself or in combination with the wearer's gloves, and boots.

2.2 Protective clothing material means any material or combination of materials used in an item of clothing for the purpose of isolating parts of the body from direct contact with a potentially hazardous liquid or gaseous chemicals.

2.3 Gas tight means, for the purpose of this test method, the limited flow of a gas under pressure from the inside of a TECP suit to atmosphere at a prescribed pressure and time interval.

2.4 Intrusion Coefficient means a number expressing the level of protection provided by a gas tight totally-encapsulating chemical protective suit. The intrusion coefficient is calculated by dividing the test room challenge agent concentration by the concentration of challenge agent found inside the suit. The accuracy of the intrusion coefficient is dependent on the challenge agent monitoring methods. The larger the intrusion coefficient the greater the protection provided by the TECP suit.

3.0--Summary of recommended practice

3.1 The volume of concentrated aqueous ammonia solution (ammonia hydroxide NH<INF>4</INF> OH) required to generate the test atmosphere is determined using the directions outlined in 6.1. The suit is donned by a person wearing the appropriate respiratory equipment (either a positive pressure self-contained breathing apparatus or a positive pressure supplied air respirator) and worn inside the enclosed test room. The

exhaust of the ammonia test atmosphere after the test(s) are completed.

5.5 Individuals shall be medically screened for the use of respiratory protection and checked for allergies to ammonia before participating in this test procedure.

6.0--Test procedure

6.1.1 Measure the test area to the nearest foot and calculate its volume in cubic feet. Multiply the test area volume by 0.2 milliliters of concentrated aqueous ammonia solution per cubic foot of test area volume to determine the approximate volume of concentrated aqueous ammonia required to generate 1000 ppm in the test area.

6.1.2 Measure this volume from the supply of concentrated aqueous ammonia and place it into a closed plastic container.

6.1.3 Place the container, several high range ammonia detector tubes, and the pump in the clean test pan and locate it near the test area entry door so that the suited individual has easy access to these supplies.

6.2.1 In a non-contaminated atmosphere, open a pre-sealed ammonia indicator strip and fasten one end of the strip to the inside of the suit face shield lens where it can be seen by the wearer. Moisten the indicator strip with distilled water. Care shall be taken not to contaminate the detector part of the indicator paper by touching it. A small piece of masking tape or equivalent should be used to attach the indicator strip to the interior of the suit face shield.

6.2.2 If problems are encountered with this method of attachment, the indicator strip can be attached to the outside of the respirator face piece lens being used during the test.

6.3 Don the respiratory protective device normally used with the suit, and then don the TECP suit to be tested. Check to be sure all openings which are intended to be sealed (zippers, gloves, etc.) are completely sealed. DO NOT, however, plug off any venting valves.

6.4 Step into the enclosed test room such as a closet, bathroom, or test booth, equipped with an exhaust fan. No air should be exhausted from the chamber during the test because this will dilute the ammonia challenge concentrations.

6.5 Open the container with the pre-measured volume of concentrated aqueous ammonia within the enclosed test room, and pour the liquid into the empty plastic test pan. Wait two minutes to allow for adequate volatilization of the concentrated aqueous ammonia. A small mixing fan can be used near the evaporation pan to increase the evaporation rate of the ammonia solution.

6.6 After two minutes a determination of the ammonia concentration within the chamber should be made using the high range colorimetric detector tube. A concentration of 1000 ppm ammonia or greater shall be generated before the exercises are started.

6.7 To test the integrity of the suit the following four minute exercise protocol should be followed:

6.7.1 Raising the arms above the head with at least 15 raising motions completed in one minute.

6.7.2 Walking in place for one minute with at least 15 raising motions of each leg in a one-minute period.

6.7.3 Touching the toes with a least 10 complete motions of the arms from above the head to touching of the toes in a one-minute period.

6.7.4 Knee bends with at least 10 complete standing and squatting motions in a one-minute period.

6.8 If at any time during the test the colorimetric indicating paper should change colors, the test should be stopped and section 6.10 and 6.12 initiated (See] 4.2).

Visually inspect all parts of the suit to be sure they are positioned correctly and secured tightly before putting the suit back into service. Special care should be taken to examine each exhaust valve to make sure it is not blocked.

Care should also be exercised to assure that the inside and outside of the suit is completely dry before it is put into storage.