211 MCGUINNESS BOULEVARD MIXED-USE DEVELOPMENT

BROOKLYN, NEW YORK

Remedial Investigation Report

NYC VCP Site Number: Unknown

OER Project Number: 15RHAN236K

Prepared for:

Stellar Management

156 William Street,

New York, New York 10058

(212) 843-3556

Prepared by:

VHB Engineering, Surveying and Landscape Architecture, P.C.

100 Motor Parkway, Suite 135, Hauppauge, New York

(631) 787-3400

March/2015

REMEDIAL INVESTIGATION REPORT

TABLE OF CONTENTS

FIGURES 5
LIST OF ACRONYMS 8
CERTIFICATION 9
EXECUTIVE SUMMARY 10
REMEDIAL INVESTIGATION REPORT 14
1.0 SITE BACKGROUND 14
1.1 Site Location and Current Usage 14
1.2 Proposed Redevelopment Plan 14
1.3 Description of Surrounding Property 15
2.0 SITE HISTORY 17
2.1 Past Uses and Ownership 17
2.2 Previous Investigations 17
2.3 Site Inspection 17
2.4 Areas of Concern 17
3.0 PROJECT MANAGEMENT 19
3.1 Project Organization 19
3.2 Health and Safety 19
3.3 Materials Management 19
4.0 REMEDIAL INVESTIGATION ACTIVITIES 20
4.1 Geophysical Investigation 21
4.2 Borings and Monitoring Wells 21
4.3 Sample Collection and Chemical Analysis 24
5.0 ENVIRONMENTAL EVALUATION 29
5.1 Geological and Hydrogeological Conditions 29
5.2 Soil Chemistry 29
5.3 Groundwater Chemistry 34
5.4 Soil Vapor Chemistry 36
5.5 Prior Activity 37

5.6 Impediments to Remedial Action 37

FIGURES

- Figure 1 – Site Location Map
- Figure 2 – Site Aerial Photograph
- Figure 3A – Proposed Redevelopment Plan
- Figure 3B – Proposed Redevelopment Plan
- Figure 3C – Proposed Redevelopment Plan
- Figure 3D – Proposed Redevelopment Plan
- Figure 4 – Property Survey
- Figure 5 – Sample Locations
- Figure 6 – Areas of Concern

TABLES

- Table 1 – Volatile Organic Compounds (VOCs) in Vapor Samples (PVE Sheffler)
- Table 2 – Part 375 Metals (ICP) in Soil Samples (PVE Sheffler)
- Table 3 – Volatile Organic Compounds (VOCs) in Soil Boring Samples (PVE Sheffler)
- Table 4 – Semi-Volatile Organics (Acid/Base Neutrals) in Soil Boring Samples (PVE Sheffler)
- Table 5 – Chlorinated Pesticides & Herbicides in Soil Boring Samples (PVE Sheffler)
- Table 6 – Polychlorinated Biphenyls (PCBs) in Soil Boring Samples (PVE Sheffler)
- Table 7 – Part 375 Metals (ICP) in Ground Water Samples (PVE Sheffler)
- Table 8 – Volatile Organic Compounds (VOCs) in Ground Water Samples (PVE Sheffler)
- Table 9 – Semi-Volatile Organics (Acid/Base Neutrals) in Ground Water Samples (PVE Sheffler)
- Table 10 – Chlorinated Pesticides in Ground Water Samples (PVE Sheffler)
- Table 11 – Polychlorinated Biphenyls (PCBs) in Ground Water Samples (PVE Sheffler)
- Table 12 – Summary of Soil Analytical Data (VHB)
- Table 13 – Summary of Groundwater Analytical Data (VHB)
- Table 14 – Summary of Soil Vapor Analytical Data (VHB)

APPENDICES

Appendix A – Soil Boring Logs

Appendix B – Laboratory Analytical Data

Appendix C –Limited Phase II ESA, PVE Sheffler, March 25, 2014

LIST OF ACRONYMS

Acronym	Definition
AOC	Area of Concern
CAMP	Community Air Monitoring Plan
COC	Contaminant of Concern
CPP	Citizen Participation Plan
CSM	Conceptual Site Model
DER-10	New York State Department of Environmental Conservation Technical Guide 10
FID	Flame Ionization Detector
GPS	Global Positioning System
HASP	Health and Safety Plan
HAZWOPER	Hazardous Waste Operations and Emergency Response
IRM	Interim Remedial Measure
NAPL	Non-aqueous Phase Liquid
NYC VCP	New York City Voluntary Cleanup Program
NYC DOHMH	New York City Department of Health and Mental Hygiene
NYC OER	New York City Office of Environmental Remediation
NYS DOH ELAP	New York State Department of Health Environmental Laboratory Accreditation Program
OSHA	Occupational Safety and Health Administration
PID	Photoionization Detector
QEP	Qualified Environmental Professional
RI	Remedial Investigation
RIR	Remedial Investigation Report
SCO	Soil Cleanup Objective
SPEED	Searchable Property Environmental Electronic Database

CERTIFICATION

I, Bryan Murty, am a Qualified Environmental Professional, as defined in RCNY § 43-1402(ar). I have primary direct responsibility for implementation of the Remedial Investigation for the 211 McGuinness Boulevard Mixed-Use Development site, (Project No. 15RHAN236K). I am responsible for the content of this Remedial Investigation Report (RIR), have reviewed its contents and certify that this RIR is accurate to the best of my knowledge and contains all available environmental information and data regarding the property.

Qualified Environmental Professional Date Signature

EXECUTIVE SUMMARY

The Remedial Investigation Report (RIR) provides sufficient information for establishment of remedial action objectives, evaluation of remedial action alternatives, and selection of a remedy pursuant to RCNY§ 43-1407(f). The remedial investigation (RI) described in this document is consistent with applicable guidance.

Site Location and Current Usage

The subject property is identified by the street addresses of 209 and 211 through 235 McGuinness Boulevard, and as Borough 3 – Block 2576 – Lot Nos. 23 and 20, respectively on the New York City (NYC) tax maps. The subject property is located within the Greenpoint neighborhood of the Borough of Brooklyn. Currently, Lot No. 23 is developed with three vacant connected, one-story commercial buildings that were formerly utilized as an auto part store and service garage, a billiards hall, an antiques retailer and a vacant commercial space with basement. Lot No. 20 is improved with a two-story, two-family residence with basement.

Summary of Proposed Redevelopment Plan

The applicant's proposed development consists of an approximately 213,000 gross square foot (gsf) mixed use building to be built on Block 2576, Lots 20 and 23. The building will contain 197 residential units, of which 40 will be affordable units pursuant to the Inclusionary Housing program, and 18,366 square feet of ground floor commercial space. Ground floor uses include a lobby, a lounge, and a library associated with the residential component of the building, and local retail space. Additionally, the cellar level of the building will have an 18,450 square foot, attended parking garage with 110 parking spaces one floor below-grade. The cellar level will also include storage areas for the building residents and bicycle parking. The new building will be approximately 80 feet tall and have 8 above-grade floors. The existing buildings on the site will be demolished to make way for the new construction.

Summary of Past Uses of Site and Areas of Concern

Based upon previous Phase I ESAs completed for the subject property, a portion of Lot 20 was historically developed as a porcelain manufacturing facility dating from 1887 at least 1916. Activities on-site included a machine shop, mixing and molding, porcelain painting, coal storage, and operation of numerous kilns. During the porcelain manufacturing process, various metals may have been used in the glazing processes. Subsequent to initial redevelopment of Lot 20, the northern portion of the parcel was developed as an automobile service facility, which has been operating on the parcel under different ownership since at least 1942.

A history of Lot No. 23 was established dating back to 1887, when the parcel was vacant. By 1905, the parcel was improved with the existing two-story two-family residence with two small accessory structures (likely sheds). Between 1916 and 1942, the accessory sheds were presumably removed and replaced with a one-story detached garage located on the western portions of the subject property. The detached garage is no longer present, but was likely demolished between 2007 and present.

The Areas of Concern identified in the Phase I ESAs produced for the respective parcels include portions of the site where underground storage tanks (USTs) were previously located, along with areas along the northern portions of the subject property proximate to the adjacent gasoline filling station. Furthermore, given the historically industrial nature of the subject and surrounding properties, a potential for soil, groundwater and soil vapor impacts at the subject property was identified.

Summary of the Work Performed under the Remedial Investigation

Given the potential for subsurface impacts, the following subsurface investigations were performed by PVE Sheffler, LLC (PVE Sheffler) on Lot No. 20:

- Installation of five soil borings in areas where potential subsurface impacts could be identified.
- Installation of three temporary groundwater monitoring wells for collection and analysis of groundwater samples.
- Collection of three (3) sub-slab soil vapor samples for analysis for vapor intrusion.

Based upon the results of the PVE Sheffler subsurface investigation, along with consultation with the New York City Office of Environmental Remediation (NYCOER), VHB conducted a

supplemental subsurface investigation on Lot No. 20, along with additional subsurface investigations on Lot No. 23 to satisfy the E-Designation requirements for HazMat. An NYCOER-approved short form Work Plan outlined the following supplemental and additional subsurface investigations:

- Installation of five (5) soil borings installed at the site at approved locations to supplement PVE Sheffler's initial sample data, with two multi-depth soil samples collected from each soil boring location.
- Collection of one groundwater sample from a centralized soil boring location.
- One sub-slab soil vapor sample collected within a centralized location on Lot No. 20.

Summary of Environmental Findings

1. Elevation of the property is approximately 17-feet above mean sea level.
2. Depth to groundwater is confirmed at approximately 12-to-14 feet below grade surface (bgs).
3. Groundwater presumably flows from southeast to northwest beneath the Site.
4. Bedrock was not encountered during the PVE Sheffler and VHB subsurface investigations.
5. The stratigraphy of the site, from the surface down, revealed the presence of fill (i.e., brick, asphalt, concrete, etc.) uniformly within the top three-feet, followed by a mixture of light and medium brown sand with traces of gravel within deeper areas. Some additional minor quantities of fill materials were encountered (approximately nine-feet bgs).
6. Soil/fill samples collected during 2014 Phase II and 2014 RI were compared to NYSDEC Unrestricted Use Soil Cleanup Objectives and Restricted Residential Use Soil Cleanup Objectives as presented in 6NYCRR Part 375-6.8 and CP51. No PCBs were detected above Unrestricted Use SCOs. One VOC, Isopropylbenzene (2,600 µg/kg) was found above Restricted Residential Use SCOs in one deep sample. Ten SVOCs, including benz(a)anthracene (maximum of 59,000 µg/kg), benzo(a)pyrene (maximum of 47,000 µg/kg), benzo(b)fluoranthene (maximum of 48,000 µg/kg), benzo(k)fluoranthene

(maximum of 23,000 µg/kg) chrysene (maximum of 59,000 µg/kg), dibenz(a,h)anthracene (maximum of 13,000 µg/kg), indeno(1,2,3-cd)pyrene (maximum of 29,000 µg/kg), fluoranthene (maximum 150,000 µg/kg), phenanthrene (maximum 150,000 µg/kg), and pyrene (maximum 150,000 µg/kg) were detected above Restricted Residential Use SCOs in three shallow and one deep soil samples. Naphthalene (maximum of 16,000 µg/kg) was also detected in one shallow soil sample at a concentration above Unrestricted Use SCOs. Most of elevated SVOCs were detected at sample location VHB SB-3 (0-2' and 14-16'), representing a hot spot. Metals including arsenic (maximum of 25 mg/kg), cadmium (maximum of 2.8 mg/kg), copper (maximum of 980 mg/kg), lead (maximum of 680 mg/kg), mercury (maximum of 1.9 mg/kg), and zinc (maximum of 1000 mg/kg) were detected above Unrestricted Use SCOs in the shallow soil samples. Of these metals, arsenic, lead, and mercury also exceeded Restricted Residential Use SCOs. One pesticide, 4,4-DDE (maximum of 13.8 µg/kg) was detected above Unrestricted Use SCOs in one shallow soil sample.

7. Groundwater samples collected during the 2014 Phase II and 2014 RI were compared to NYSDEC Technical and Operational Guidance Series (TOGS) 1.1.1 Ambient Water Quality Standards (GQS) for Class GA (drinking water). No VOCs, SVOCs, pesticides, or PCBS were detected above the GQS. The dissolved metals antimony (maximum 50.73 µg/L), manganese (maximum 1,078 µg/L), and sodium (maximum 25,600 µg/L) were detected above their respective GQS.

8. Soil vapor samples collected during the 2014 Phase II and 2014 RI were compared to the compounds in Table 3.1 Air Guidance Valued derived by the New York State of Health (NYSDOH) Final Guidance on Soil Vapor Intrusion (October 2006). Soil vapor results detected trace to high levels of petroleum related compounds including BTEX (maximum of 3,290 ug/m^3), hexane (maximum of 3,900 ug/m^3), cyclohexane (maximum of 9,100 ug/m^3), and benzene (maximum of 3,200 ug/m^3). 1,1,1-Trichloroethane and carbon tetrachloride were not detected in any of the soil vapor samples. The chlorinated solvents tetrachloroethylene (PCE) and trichloroethylene (TCE) were detected in one sample but at concentrations below the monitoring level ranges established within the NYSDOH Final Guidance on Soil Vapor Intrusion.

REMEDIAL INVESTIGATION REPORT

1.0 SITE BACKGROUND

Stellar Management has enrolled in the New York City Voluntary Cleanup Program (NYC VCP) to investigate and remediate an approximately 0.78-acre site located at 209 and 211-235 McGuinness Boulevard in the Greenpoint section of Brooklyn, New York. Residential and commercial is proposed for the property. The RI work was performed by PVE Sheffler and VHB between February 2014 and November 2014. This RIR summarizes the nature and extent of contamination and provides sufficient information for establishment of remedial action objectives, evaluation of remedial action alternatives, and selection of a remedy that is protective of human health and the environment consistent with the use of the property pursuant to RCNY§ 43-1407(f).

1.1 Site Location and Current Usage

The Site is located at 209 and 211-235 McGuinness Boulevard in the Greenpoint section in Brooklyn, New York and is identified as Block 2576 and Lot Nos. 20 and 23 on the New York City Tax Map. Figure 1 shows the Site location, with an aerial photograph included as Figure 2, with a property survey provided as Figure 4. The Site is 33,750-square feet and is bounded by a gasoline filling station to the north, a multi-unit residential apartment building with ground-floor retail to the south, McGuinness Boulevard to the east, and multi-family/multi-unit residential uses to the west along Eckford Street. A map of the site boundary is shown in Figure 2. Currently, Lot No. 23 is developed with three vacant connected, one-story commercial buildings that were formerly utilized as an auto part store and service garage, a billiards hall, an antiques retailer and a vacant commercial space with basement. Lot No. 20 is improved with a two-story, two-family residence with basement.

1.2 Proposed Redevelopment Plan

The proposed future use of the Site will consist of a mixed use residential and ground floor commercial building, with below grade parking. Layout of the proposed site development is presented on Figures 3A through 3D.. The current zoning designation is R7A with a C2-4 overlay along McGuinness Boulevard. The R7A zoning district with the Inclusionary Housing program permits residential units to an FAR of 3.45, and with the Inclusionary Housing bonus

the maximum FAR is increased to 4.6 with the provision of affordable housing. The proposed use is consistent with existing zoning for the property. The applicant's proposed development consists of an approximately 213,000 gross square foot (gsf) mixed use building to be built on Block 2576, Lots 20 and 23. The building will contain 197 residential units, of which 40 will be affordable units pursuant to the Inclusionary Housing program, and 18,366 square feet of ground floor commercial space. Ground floor uses include a lobby, a lounge, and a library associated with the residential component of the building, and local retail space. Additionally, the cellar level of the building will have an 18,450 square foot, attended parking garage with 110 parking spaces one floor below-grade. The cellar level will also include storage areas for the building residents and bicycle parking. The new building will be approximately 80 feet tall and have 8 above-grade floors. The existing buildings on the site will be demolished to make way for the new construction. The terminal depth of excavation for the majority of the property is 11-feet 9.5-inches below grade surface, with an additional five-feet eight-inches in two elevator shaft locations.

1.3 Description of Surrounding Property

The site was rezoned from a M1-1 zoning district to R7A, with a C2-4 commercial overlay in 2012. The affected area is in the Greenpoint section of Brooklyn Community District 1. The area surrounding the affected area is mixed use in character, containing residential buildings to the north, south, and west, and industrial/manufacturing, retail commercial uses, as well as parking and transportation uses to the east. North, south, and west of the affected area are row houses and mid-rise apartment buildings. A supermarket with surface parking lot is located directly across McGuiness Boulevard, to the east of the affected area. Other commercial and light industrial uses are located further east.

An M1-1 district covers a large area east of the project site. M1-1 is a light industrial district that permits most commercial uses, manufacturing uses that are fully enclosed and meet high performance standards, and community facilities without sleeping accommodations. Residential development is not permitted. Commercial and manufacturing development is permitted at a floor area ratio (FAR) of 1.0, and community facility development is permitted at an FAR of 2.4. The area along McGuinness Boulevard north of the affected area is zoned R6A. R6A permits residential and community facility development at 3.0 FAR and typically results in mid-rise

apartment building development of six or seven stories, occupying a high percentage of their building lot, and set on or near the street line. The Quality Housing bulk provisions are mandatory in R6A. The area on McGuinness Boulevard south of the affected area is zoned R7A, a medium-density quality housing district. R7A permits residential or community facility development and typically results in high lot coverage, seven or eight-story apartment building.

The blocks west of the affected area are zoned R6B, a quality housing district permitting 2.0 FAR of residential or commercial development. R6B typically produces four- to five-story row houses or apartment buildings.

The aerial photograph on Figure 2 depicts surrounding land usage.

2.0 SITE HISTORY

2.1 Past Uses and Ownership

Based upon a Phase I ESA prepared by Langen Engineering, Environmental, Surveying and Landscape Architecture, D.P.C. (Langan), dated January 22, 2014, Lot No. 20 was first developed prior to 1887 and has been used for commercial and industrial purposes. Based upon a Phase I ESA prepared by VHB, dated October 24, 2014, a history of Lot No. 23 was established dating back to 1887, when same was vacant. By 1905, the subject property was improved with the existing two-story two-family residence with two small accessory structures (likely sheds). Between 1916 and 1942, the accessory sheds were presumably removed and replaced with a one-story detached garage located on the western portions of the subject property. The detached garage is no longer present, but was likely demolished between 2007 and present.

2.2 Previous Investigations

As previously indicated, a Limited Phase II ESA subsurface investigation was conducted by PVE Sheffler at the subject property. The previous investigation included the installation of soil borings and collection of soil samples, groundwater samples and sub-slab soil vapor samples on Lot No. 20. The study revealed that on-site soils were impacted with metals and volatile organic compounds (VOCs) above regulatory standards. Furthermore, on-site groundwater is impacted with the metal manganese above Class GA standards. Sub-slab soil vapor impacts were also identified in three locations that exceed the average indoor air median parameters.

2.3 Site Inspection

As part of the subsurface investigation, a visual inspection of the subject property including on-site buildings was conducted under the direction of Bryan Murty, a Qualified Environmental Professional on November 20, 2014 in order to confirm the areas of concern (AOC) identified in PVE Sheffler's and VHB's Phase I ESAs. The visual inspection indicated that the entire property, with the exception of Lot No. 23 is currently vacant.

2.4 Areas of Concern

Based upon the results of the PVE Sheffler Limited Phase II ESA, consultation with NYCOER, the results of VHB's subsurface investigation (provided in the sections following),

and VHB's knowledge of the site, several AOCs were identified at the subject property. The AOCs identified for this site include:

1. Area 1 is located within the northwestern portions of the vacant building on Lot No. 20 within the former Blockbuster video. This area was initially identified for investigation due to its proximity to the adjacent gasoline filling station to the north.

2. Area 2 consists of a large portion of Lot No. 20 within the northern sections of the existing vacant building in the former Pep Boys auto store and repair facility. This area was identified for subsurface investigation due to the former automobile repairs.

3. Area 3 consists of portions of the former Pep Boys auto store and the eastern portions of the former billiards facility. This area was identified due to the presence of former tanks identified on the historical Sanborn maps.

4. Area 4 consists of the eastern portions of the antiques store along with the entirety of Lot No. 23. This area was investigated for subsurface impacts relating to potential historic fill materials.

5. Area 5 consists of the southwestern portions of the former Pep Boys auto store and the northwestern portions of the former billiards facility. These areas were investigated for subsurface impacts relating to former site uses.

Phase I ESAs for both Lot 20 and 23 were previously provided to NYCOER for review. The PVE Sheffler Limited Phase II ESA is provided in Appendix C of this RIR. Sample locations associated with the PVE Sheffler Limited Phase II ESA, along with VHB's sample locations are provided on Figure 5 of this RIR. A map showing areas of concern is presented in Figure 6.

3.0 PROJECT MANAGEMENT

3.1 Project Organization

The Qualified Environmental Profession (QEP) responsible for preparation of this RIR is Bryan S. Murty of VHB Engineering, Surveying and Landscape Architecture, P.C. (VHB).

3.2 Health and Safety

All work described in this RIR was performed in full compliance with applicable laws and regulations, including Site and OSHA worker safety requirements and HAZWOPER requirements.

3.3 Materials Management

All material encountered during the RI was managed in accordance with applicable laws and regulations.

4.0 REMEDIAL INVESTIGATION ACTIVITIES

PVE Sheffler conducted a previous Limited Phase II ESA at the subject property. The following subsurface investigative activities were conducted by PVE Sheffler at the subject property:

1. Installation of four (4) soil borings on and proximate to Lot No. 20 to identify potential subsurface impacts relating to former site uses. Four soil samples were collected (one per soil boring location).
2. Three groundwater monitoring wells were installed in the locations of three of the four soil borings. The wells were developed and sampled using low-flow sampling procedures to evaluate groundwater quality.
3. Three sub-slab soil vapor samples were collected from various locations throughout the building on Lot No. 20.

In order to supplement PVE Sheffler's previous Phase II ESA to satisfy the site's E-Designation in accordance with NYCOER, Stellar Management and its consultant performed the following scope of work:

1. Conducted a Site inspection to identify and investigate AOCs and physical obstructions (i.e. structures, buildings, etc.);
2. Installed five (5) soil borings across the entire project Site, and collected ten (10) soil samples for chemical analysis from the soil borings to evaluate soil quality and to supplement previous data;
3. Installed one (1) temporary groundwater monitoring well on the central portions of the subject property, and collected one groundwater sample for chemical analysis to evaluate groundwater quality and to supplement previous data;
4. Installed one soil vapor probe on the central portions of the subject property,and collected one sample for chemical analysis.

4.1 Geophysical Investigation

A public and private utility markout was conducted by PVE Sheffler as part of the Limited Phase II ESA subsurface investigation. No geophysical investigation was conducted by Stellar Management, VHB and its subcontractors, in accordance with the approved Work Plan

4.2 Borings and Monitoring Wells

Drilling and Soil Logging

As previously indicated, in order to supplement PVE Sheffler's subsurface investigation, five soil borings were installed by VHB and its subcontractors at the subject property, for a total of eight (8) soil borings. The eight soil borings were installed by PVE Sheffler and VHB utilizing a track-mounted Geoprobe hydraulic push drill rig and hand tools to terminal depths of approximately 16-feet below grade surface (bgs). Continuous soil samples were collected utilizing the Geoprobe in factory-new macrocore soil sampling tubes and were screened for the presence of VOCs utilizing a photoionization detector (PID). PVE Sheffler and VHB recorded detailed logs of each boring location. The soil boring logs include soil lithology, depth-to-groundwater, PID readings and sample collection notes. The following soil samples were collected by PVE Sheffler and VHB as part of the subsurface investigations:

- GB-1 was collected by PVE Sheffler utilizing a Geoprobe at a depth of 14-to-16 feet bgs. PID readings were noted between 2.9 and 5.3 parts per million (ppm).
- GB-2 was collected by PVE Sheffler utilizing a Geoprobe at a depth of 12-to-14 feet bgs. PID readings were noted between 1.7 and 5.7 ppm.
- GB-3 was collected by PVE Sheffler utilizing a Geoprobe at a depth of 14-to-16 feet bgs. PID readings were noted between 2.2 and 6.2 ppm.
- B-1 was collected by PVE Sheffler utilizing hand tools at a depth of 8.5-to-10 feet bgs. PID readings were noted at approximately 4.0 ppm.
- VHB SB-1 was installed within the northwestern portions of the former Blockbuster store to a terminal depth of 16-feet bgs. Three multi-depth soil samples were collected within this location at depths of zero-to-two-feet, eight-to-ten feet and 14-to-16-feet bgs. Visual and olfactory evidence of impacts were identified within six-

to-eight feet bgs. Furthermore, PID readings ranged from 133.2-to-412.3 ppm, as such, a middle-depth sample (eight-to-ten feet bgs) was added to determine the presence of impacts.

- VHB SB-2 was installed on the central portions of the subject property, within the former Pep Boys Auto Parts store. No visual and olfactory evidence of impacts were identified at this boring location. Furthermore, no PID readings were noted. Two multi-depth soil samples (zero-to-two feet and 14-to-16-feet bgs) were collected at this location.

- VHB SB-3 was installed on the southeastern portions of the subject property, within the former Pep Boys Auto Parts store, and within a location of a former UST area according to historical Sanborn map depictions. No visual or olfactory evidence of impacts were identified at this boring location. Furthermore, no PID readings were noted. Two multi-depth soil samples (zero-to-two feet and 14-to-16-feet bgs) were collected at this location.

- VHB SB-4 was installed within the rear yard area on Lot No. 23 at the request of NYCOER to satisfy the parcel's E-Designation. No visual or olfactory evidence of impacts were identified at this boring location. Furthermore, no PID readings were noted. Two multi-depth soil samples (zero-to-two feet and 14-to-16-feet bgs) were collected at this location.

- VHB SB-5 was installed within the within the western portions of the former Pep Boys store. No visual or olfactory evidence of impacts were identified at this boring location. Furthermore, no PID readings were noted. Two multi-depth soil samples (zero-to-two feet and 14-to-16-feet bgs) were collected at this location.

Boring logs were prepared by PVE Sheffler and are included in the attached Limited Phase II ESA in Appendix C. VHB prepared soil boring logs provided in Appendix A of this RIR. A map showing the location of soil borings and monitor wells is shown in Figure 5.

Groundwater Monitoring Well Construction

As indicated in the PVE Sheffler Limited Phase II ESA, the three soil boring locations (GB-1, GB-2 and GB-3) were converted into groundwater monitoring wells on March 3, 2014.

Groundwater was uniformly observed by PVE Sheffler to be range between 12-to-14-feet bgs. Two-inch diameter monitoring wells were constructed to a depth of 15.5-to-16.5 feet bgs with five-feet of Schedule 40 polyvinyl chloride (PVC) riser and ten-feet of 20-slot PVC screen. A sand filter was installed in the annular space of each boring between the well and the surrounding soil from the bottom of the boring to a depth of two-to-four feet bgs. A one-foot bentonite seal was placed at the surface, and the borehole was backfilled to grade with native material. Flush-to-grade protective casings were placed around each monitoring well. After well development, one groundwater sample was collected from each of the three wells.

Based upon consultation with NYCOER, VHB collected one additional groundwater sample. The groundwater sample was collected within the western areas of the former Pep Boys auto facility within the location of VHB SB-5. This location was selected due to historical auto repair activities at the subject property. Groundwater was uniformly observed by VHB to be approximately ten-feet bgs. A temporary groundwater monitoring well was installed at the location of VHB GW-1 (within boring location VHB SB-5). Factory-new polyethylene tubing was inserted into the screened interval with a check valve. Using the hand oscillatory method, groundwater was drawn to the surface and purged until turbidity was visibly reduced prior to grab sample collection.

Groundwater sample locations collected by PVE Sheffler and VHB are indicated on Figure 5 of this RIR.

Survey

As indicated in the PVE Sheffler Limited Phase II ESA and based upon consultation with NYCOER, groundwater monitoring wells and samples were collected in order to establish baseline groundwater conditions at the subject property due to the presence of historical auto repair activities and USTs at the subject property. Furthermore, groundwater samples were collected due to the presence of an adjacent gasoline filling station to the north, as well as the overall industrial nature of the surrounding area.

Water Level Measurement

As indicated on PVE Sheffler's boring logs provided in Appendix C, groundwater was identified between 12-to-14 feet bgs. VHB observed groundwater at approximately 10-feet bgs, as indicated on VHB's boring logs provided in Appendix A.

4.3 Sample Collection and Chemical Analysis

Sampling performed as part of the field investigation was conducted for all Areas of Concern and also considered other means for bias of sampling based on professional judgment, area history, discolored soil, stressed vegetation, drainage patterns, field instrument measurements, odor, or other field indicators. All media including soil, groundwater and soil vapor have been sampled and evaluated in the RIR. Discrete (grab) samples have been used for final delineation of the nature and extent of contamination and to determine the impact of contaminants on public health and the environment. The sampling performed and presented in this RIR provides sufficient basis for evaluation of remedial action alternatives, establishment of a qualitative human health exposure assessment, and selection of a final remedy.

Soil Sampling

As previously indicated, four (4) soil samples were previously collected by PVE Sheffler as part of a Limited Phase II ESA (see Appendix C of this RIR).

In addition to the above, ten (10) multi-depth soil samples were collected by VHB at depths previously approved by NYCOER. One additional soil sample was collected in the field (VHB SB-1 [8-10’]) due to presence of visual/olfactory evidence of impacts, as well as elevated PID readings. As such, eleven (11) soil samples were collected and submitted for laboratory analysis by VHB field personnel.

Soil sample analytical data was tabulated by PVE Sheffler onto Tables 1 through 6f this RI. Furthermore, laboratory analytical data was tabulated by VHB onto Table 12 of this RIR. Figure 5 shows the location of samples collected in this investigation.

All soil samples were placed directly into laboratory-supplied glassware and were placed into coolers packed with ice and stored at a temperature of 4º Celsius pending transport for laboratory analysis. Soil samples collected by PVE Sheffler were submitted with appropriate chain-of-custody to Centek Laboratories, LLC (Centek) of Syracuse, New York, and soil samples collected by VHB were submitted with appropriate chain-of-custody to Alpha Analytical, Inc. (Alpha), of Mansfield, Massachusetts, a New York State Department of Health (NYSDOH) Environmental Laboratory Approval Program (ELAP) and National Environmental Laboratory Accreditation Program (NELAP)-certified laboratory.

It should be noted that all sampling equipment utilized during soil sampling were field decontaminated using an Alconox detergent/potable water wash and potable water rinse between sample locations.

Groundwater Sampling

As previously indicated, three (3) soil boring locations were converted into groundwater monitoring wells as part of PVE Sheffler's Limited Phase II ESA (see Appendix C of this RIR).

In addition to the above, based upon consultation with NYCOER, VHB field personnel collected one groundwater grab sample within the western areas of the former Pep Boys auto facility within the location of VHB SB-5 (denoted as sample VHB GW-1).

Groundwater sample analytical data was tabulated by PVE Sheffler onto Tables 7 through 11 in this RIR. Furthermore, groundwater laboratory analytical data was tabulated by VHB onto Table 13 of this RIR. Figure 5 shows the location of soil and groundwater samples collected during these investigations.

All groundwater samples were purged directly into laboratory-supplied glassware and were placed into coolers packed with ice and stored at a temperature of 4º Celsius pending transport for laboratory analysis. Groundwater samples collected by PVE Sheffler were submitted with appropriate chain-of-custody to Centek, and the groundwater sample collected by VHB was submitted with appropriate chain-of-custody to Alpha.

It should be noted that all sampling equipment utilized during groundwater sampling were field decontaminated using an Alconox detergent/potable water wash and potable water rinse between sample locations.

It should be noted that in accordance with the NYCOER-approved Work Plan, no duplicate or blank sampling was performed. However, standard laboratory QA/QC protocols were implemented during sample analysis (as indicated in the laboratory analytical data provided in Appendix B.

Soil Vapor Sampling

As previously indicated, three sub-slab vapor sampling points (samples SV-1, SV-2 and SV-3) were installed by PVE Sheffler as part of a Limited Phase II ESA (see Appendix C of this

RIR) and three soil vapor samples were collected for chemical analysis. As indicated in the PVE Sheffler Limited Phase II ESA, soil vapor points installed by drilling through the 6.5-to-7 inch concrete slab using a hammer drill with a 5/8" drill bit. Polyethylene tubing was inserted to the bottom of the borehole and then sealed at the surface using a non-VOC emitting clay.

Based upon consultation between NYCOER and VHB, one additional soil vapor sample location (VHB SV-1) was identified in order to supplement PVE Sheffler's Limited Phase II ESA sub-slab soil vapor data (as indicated on Figure 5). The soil vapor sample was collected by VHB within the location of the former Pep Boys tenant space. The soil vapor implant consisted of polyethylene tubing set just below the floor slab, and the annular space surrounding the tubing was filled with washed gravel. The sample point was sealed into the floor slab using a non-toxic clay bentonite to prevent ambient air from being drawn into the borehole and mixing with the soil vapor to be sampled. The area immediately above the sample was sealed with bentonite clay surrounding the canister, thus creating an annular space. Helium was introduced into the annular space for quality assurance/quality control (QA/QC) analysis.

Prior to collection of soil vapor samples by VHB (as well as PVE Sheffler), sub-slab soil vapor sampling points were purged of approximately three tube volumes of soil vapor utilizing a PID or peristaltic pump. Laboratory supplied vacuum Summa canisters were then connected to the polyethylene tubing, and were sampled over a two-hour period which conform to methodologies used for soil vapor assessment in accordance with the *NYSDOH Final Guidance on Soil Vapor Intrusion, October 2006.*

Soil vapor sample locations collected for chemical analysis by PVE Sheffler and VHB are shown on Figure 5. Soil vapor samples were submitted by PVE Sheffler to Centek. The laboratory analytical results of the PVE Sheffler soil vapor samples were tabulated and are included in Table 1 of the Limited Phase II ESA (see Appendix C) and also on Table 1 of this RIR. The soil vapor sample collected by VHB was submitted to Alpha. The analytical laboratory results of the VHB soil vapor sample were tabulated and included on Table 12 of this RIR.

Chemical Analysis

Chemical analytical work presented in this RIR has been performed in the following manner:

Factor	Description
Quality Assurance Officer	The chemical analytical quality assurance is directed by Bryan Murty
Chemical Analytical Laboratory	Chemical analytical laboratory(s) used in the RI are NYS ELAP certified and were Centek and Alpha
Chemical Analytical Methods	Soil analytical methods: • TAL Metals by EPA Method 6010C (rev. 2007); • VOCs by EPA Method 8260C (rev. 2006); • SVOCs by EPA Method 8270D (rev. 2007); • Pesticides by EPA Method 8081B (rev. 2000); • PCBs by EPA Method 8082A (rev. 2000); Groundwater analytical methods: • TAL Metals by EPA Method 6010C (rev. 2007); • VOCs by EPA Method 8260C (rev. 2006); • SVOCs by EPA Method 8270D (rev. 2007); • Pesticides by EPA Method 8081B (rev. 2000); • PCBs by EPA Method 8082A (rev. 2000); Soil vapor analytical methods: • VOCs by TO-15 VOC parameters. • Helium fixed gas analysis for VHB SV-1.

Results of Chemical Analyses

Laboratory data for soil, groundwater and soil vapor samples collected by both PVE Sheffler and VHB are summarized in Tables 1 through 14. Laboratory data deliverables for all samples evaluated in this RIR are provided in digital form. Laboratory analytical data from PVE Sheffler's Limited Phase II ESA are provided in Appendix C, and laboratory analytical data from VHB's subsurface investigation are provided in Appendix B.

5.0 ENVIRONMENTAL EVALUATION

5.1 Geological and Hydrogeological Conditions

Stratigraphy

Boring logs provided in PVE Sheffler's Limited Phase II ESA (see Appendix C) revealed the presence of fill (i.e., brick, asphalt, concrete, etc.) uniformly within the top three-feet, followed by a mixture of light and medium brown sand with traces of gravel within deeper areas. Some additional minor quantities of fill materials were encountered (approximately nine-feet bgs).

VHB's subsurface investigation confirmed the presence of fill within the top several feet, as shown on VHB's boring logs (see Appendix A). Light-to-medium brown silty sands with traces of gravel were identified in the deeper soils (i.e., below three-feet bgs) within the majority of the boring locations. Bedrock was not encountered during the PVE Sheffler and VHB subsurface investigations.

Hydrogeology

As previously indicated, PVE Sheffler encountered groundwater between 12-to-14 feet bgs throughout the subject property, as indicated on boring logs provided in the Limited Phase II ESA (see Appendix C). VHB personnel detected groundwater at approximately nine-to-ten feet bgs. Groundwater table information is indicated on VHB's soil boring logs provided in Appendix A. Based upon the known regional groundwater flow, it is expected that groundwater flow beneath the subject property is to the northwest, toward the East River.

5.2 Soil Chemistry

PVE Sheffler Soil Sample Results

Based upon the analytical data and information provided in the PVE Sheffler Limited Phase II ESA, no heavy metals were detected within of the four soil samples above the New York State Department of Environmental Conservation (NYSDEC) Track One Unrestricted Use Soil Cleanup Objectives (UUSCOs). In addition, there were no detectable concentrations of SVOCs, chlorinated pesticides/herbicides or PCBs above laboratory method detection limits (MDLs). Several VOCs were detected in two of the four soil samples collected by PVE Sheffler. However, only one VOC from sample GB-1 contained the VOC acetone at a concentration 138

micrograms per kilogram (ug/kg) which exceeds the NYSDEC Track Two Restricted Residential Use Soil Cleanup Objectives (RRUSCOs). None of the remaining VOCs identified exceeded the NYSDEC Track One UUSCOs. As previously indicated, analytical laboratory data from PVE Sheffler's soil sampling is tabulated on Table 1 of this RIR.

VHB Soil Sample Results

A breakdown of VHB soil sample results is provided, below.

VHB SB-1 (0-2')

As indicated on Table 12, six VOCs were detected in sample VHB SB-1 (0-2'). However, none of the VOCs were detected at concentrations that exceeded their respective NYSDEC Part 375 RUSCOs or UUSCOs. Five SVOCs (benzo(a)anthracene, benzo(a)pyrene, benzo(b)fluoranthene, chrysene and indeno(1,2,3-cd)pyrene) were detected at concentrations that exceeded their respective NYSDEC Part 375 RUSCOs and UUSCOs. In addition, concentrations of the metals mercury and zinc were detected above their respective UUSCOs and copper and lead were detected above their respective NYSDEC Part 375 RUSCOs and UUSCOs. No PCBs or pesticides were detected above their respective laboratory MDLs.

VHB SB-1 (8-10')

Laboratory analytical results reported one VOC, isopropylbenzene, at a concentration of 2,600 ug/kg, which exceeds the NYSDEC CP-51 Protection of Groundwater value of 2,300 ug/kg. Five additional VOCs were detected at concentrations above laboratory detection limits and below their respective NYSDEC Part 375 UUSCOs, where applicable. However, the laboratory MDLs reported for the a number of VOCs including 1,1-dichloroethene, 1,2-dichloroethane, 1,4-dioxane, 2-butanone (methyl ethyl ketone), acetone, benzene, chloroform, methylene chloride, trans-1,2-dichloroethana, vinyl chloride and xylenes were above their respective NYSDEC Part 375 UUSCOs. As such, it is possible that these compounds may be present in this sample at concentrations above standards. No concentrations of SVOCs, pesticides or PCBs were detected above their respective NYSDEC UUSCOs or RUSCOs. Concentrations of 19 metals were detected in sample VHB SB-1 (8-10'), 17 of which were detected below applicable standards. Lead and mercury were detected at concentrations above

their respective NYSDEC Part 375 UUSCOs and below their respective NYSDEC Part 375 RUSCOs.

VHB SB-1 (14-16')

Concentrations of 11 VOCs and 17 metals were reported in sample VHB SB-1 (14-16'), each below their respective NYSDEC Part 375 UUSCO and RUSCO. No SVOCs, pesticides or PCBs were detected at concentrations above laboratory MDLs.

VHB SB-2 (0-2')

As indicated on Table 12, one VOC, naphthalene, was detected in sample VHB SB-2 (0-2') at a concentration well below its NYSDEC Part 375 UUSCO and RUSCO. No other VOCs were detected above laboratory MDLs. However, the laboratory MDLs reported for the three VOCs including acetone, 1,4-dioxane and methylene chloride were above their respective NYSDEC Part 375 UUSCOs. As such, it is possible that these compounds may be present in this sample at concentrations above standards. Several SVOCs, including benzo(a)anthracene, benzo(a)pyrene, benzo(b)fluoranthene, benzo(k)fluoranthene, chrysene and indeno(1,2,3-cd)pyrene were detected above their respective NYSDEC Part 375 UUSCOs and RUSCOs. The SVOC dibenzo(a,h)anthracene was detected at a concentration of 400 ug/kg, which is also above its respective UUSCO. No PCBs or pesticides were detected above their laboratory MDLs. With respect to metals, calcium was detected at an elevated concentration of 21,000 milligrams per kilogram (mg/kg), which exceeds the NYSDEC CP-51 Soil Cleanup Guidance of 10,000 mg/kg. Lead was detected at a concentration of 150 mg/kg, which exceeds the NYSDEC UUSCO, but is below the respective NYSDEC RUSCO. Mercury was also detected in surficial soils at a concentration of 1.9 mg/kg, which exceeds both the NYSDEC Part 375 UUSCO and RUSCO.

VHB SB-2 (14-16')

Based upon a review of Table 12, no VOCs were detected at concentrations that exceeded their respective NYSDEC Part 375 UUSCOs. Furthermore, no SVOCs, pesticides or PCBs were

detected above laboratory MDLs. Several metals were identified within deeper soils at SB-2. However, only aluminum was detected at a concentration of 11,000 mg/kg, which exceeds the NYSDEC Part 375 UUSCO of 10,000 mg/kg.

VHB SB-3 (0-2')

As indicated on Table 12, one VOC, naphthalene, was detected in sample VHB SB-3 (0-2') at a concentration well below its NYSDEC Part 375 UUSCO. No other VOCs were detected above laboratory MDLs. However, the laboratory MDLs reported for the three VOCs including acetone, 1,4-dioxane and methylene chloride were above their respective NYSDEC Part 375 UUSCOs. As such, it is possible that these compounds may be present in this sample at concentrations above standards. Numerous SVOCs, including benzo(a)anthracene, benzo(a)pyrene, benzo(b)fluoranthene, benzo(k)fluoranthene, chrysene, fluoranthene, phenanthrene, indeno(1,2,3-cd)pyrene and pyrene were detected above their respective NYSDEC Part 375 UUSCOs and RUSCOs. The SVOCs dibenzo(a,h)anthracene and naphthalene were detected at a concentrations that exceed their respective NYSDEC Part 375 UUSCOs but were below the respective RUSCOs. Several additional SVOCs were detected at concentrations below applicable standards. Several PCBs, arochlor 1260 and arochlor 1268 were detected at estimated concentrations of 0.0376 and 0.016 mg/kg, making an estimated total PCB concentration of 0.0542 mg/kg, which is below the NYSDEC Part 375 UUSCO of 0.10 and RUSCO of 1.0 mg/kg. No pesticides were detected at concentrations above their respective laboratory MDLs. Several metals including arsenic, cadmium, copper and lead were detected at concentrations that exceeded both their respective NYSDEC UUSCOs and RUSCOs. Additional metals including calcium, mercury, vanadium and zinc were detected at concentrations that exceeded their respective NYSDEC UUSCOs, but were below their respective RUSCOs. None of the additional metals detected exceeded applicable standards.

VHB SB-3 (14-16')

As indicated on Table 12, one VOC, naphthalene, was detected in sample VHB SB-3 (14-16') at a concentration well below its NYSDEC Part 375 UUSCO. No other VOCs were detected above laboratory MDLs. However, the laboratory MDLs reported for the three VOCs

including acetone, 1,4-dioxane and methylene chloride were above their respective NYSDEC Part 375 UUSCOs. As such, it is possible that these compounds may be present in this sample at concentrations above standards. Several SVOCs, including benzo(a)anthracene, benzo(a)pyrene, benzo(b)fluoranthene, benzo(k)fluoranthene, chrysene and indeno(1,2,3-cd)pyrene were detected above their respective NYSDEC Part 375 UUSCOs and RUSCOs. The SVOC dibenzo(a,h)anthracene was detected at a concentration that exceeded its NYSDEC Part 375 UUSCO, but was below the respective RUSCO. Several additional SVOCs were detected at concentrations below applicable regulatory standards. One PCB, arochlor 1260 was detected at an estimated concentration of 0.0304 mg/kg, which is below the NYSDEC Part 375 UUSCO of 0.10 and RUSCO of 1.0 mg/kg for total PCBs. No pesticides were detected at concentrations above their respective laboratory MDLs. Several metals in soil sample VHB SB-3 (14-16') including copper, lead, nickel and zinc were detected at concentrations that exceeded their respective NYSDEC UUSCOs, but were below RUSCO standards. None of the additional metals detected exceeded applicable regulatory standards.

VHB SB-4 (0-2')

As indicated on Table 12, no VOCs or SVOCs were detected at concentrations approaching their respective NYSDEC Part 375 UUSCOs or RUSCOs. Additionally, no PCBs were detected at concentrations above their respective laboratory MDLs. One pesticide, 4,4'-DDT, was detected at a concentration of 3.05 ug/kg, which does not exceed the NYSDEC Part 375 UUSCO and RUSCO for 4,4'-DDT. No additional pesticides were detected above laboratory MDLs. Of the metals detected in SB-4 (0-2'), lead, mercury and zinc were detected at concentrations that exceeded their respective NYSDEC Part 375 UUSCOs, but were below their respective RUSCOs. None of the additional metals detected exceeded applicable standards.

VHB SB-4 (14-16')

As indicated on Table 12, no VOCs or metals were detected at concentrations that exceed their respective NYSDEC Part 375 UUSCOs or RUSCOs. No SVOCs, PCBs or pesticides were detected above laboratory MDLs.

VHB SB-5 (0-2')

As indicated on Table 12, no VOCs or SVOCs were detected at concentrations approaching their respective NYSDEC Part 375 UUSCOs or RUSCOs. Additionally, no PCBs were detected at concentrations above their respective laboratory MDLs. One pesticide, 4,4'-DDE, was detected at a concentration of 13.8 ug/kg, which exceeds the NYSDEC Part 375 UUSCO of 3.3 ug/kg, but is below the NYSDEC RUSCO of 1,800 ug/kg. No additional pesticides were detected above laboratory MDLs. Of the metals detected in SB-5 (0-2'), calcium and mercury were detected at concentrations that exceeded their respective NYSDEC Part 375 UUSCOs, but were below their respective RUSCOs. None of the additional metals detected exceeded applicable standards.

VHB SB-5 (14-16')

As indicated on Table 12, no VOCs, SVOCs or metals were detected at concentrations that exceed their respective NYSDEC Part 375 UUSCOs or RUSCOs. No PCBs or pesticides were detected above laboratory MDLs.

It should be noted that VHB SB-5 was also completed as a temporary groundwater monitoring well during the field sampling. The groundwater sampling is summarized in Section 2.2, below.

Data collected during the RI is sufficient to delineate the vertical and horizontal distribution of contaminants in soil/fill at the Site.

5.3 Groundwater Chemistry

PVE Sheffler Groundwater Sample Results

Based upon the analytical data and information provided in the PVE Sheffler Limited Phase II ESA, no concentrations of VOCs, SVOCs, chlorinated pesticides or PCBs were detected at concentrations above laboratory MDLs. One metal, manganese, was uniformly detected in each of the three groundwater samples collected by PVE Sheffler at a concentration that exceeds the applicable New York State 6NYCRR Part 703.5 Class GA groundwater standard. No additional metals were detected at concentrations that exceed the applicable groundwater quality

standards/guidance values. As previously indicated, analytical laboratory data from PVE Sheffler's groundwater sampling is tabulated on Tables 7 through 11 of this RIR.

VHB Groundwater Sample Results

Groundwater sampling results were compared to the NYSDEC Technical and Operation Guidance Series (TOGS) 1.1.1 list of Ambient Water Quality Standards and Guidance Values and Groundwater Effluent Limitations, June, 1998. Based upon the analytical data Based upon a review of analytical laboratory data and tabulated onto Table 13, no PCBs or pesticides were detected above laboratory MDLs in sample VHB GW-1. One VOC, acetone, was detected at an estimated concentration of 2.0 ug/kg, which is well below the NYSDEC Ambient Water Quality Standards and Guidance Value (AWQSGV) of 50 ug/kg. Four SVOCs, bis(2-ethylhexyl)phthalate, butyl benzyl phthalate, fluoranthene and pyrene were detected at trace estimated concentrations which were well below their respective NYSDEC AWQSGVs.

Sample GW-1 was also analyzed for TAL Metals (total and dissolved). Numerous total metals were identified above their respective NYSDEC AWQSGVs. However, only three dissolved metals (antimony, manganese and sodium) were identified at concentrations that exceed their respective NYSDEC AWQSGVs.

Based upon the foregoing, groundwater underlying the subject property is unlikely to have been impacted by historical auto repair activities, as no VOCs or SVOCs were detected at concentrations that exceed their respective NYSDEC AWQSGVs. However, several dissolved metal concentrations including antimony, manganese and sodium were identified in groundwater. Possible sources of antimony in groundwater include plumbing materials, mining wastes, manufacturing effluent, leaching or fertilizers, leaching of landfills and fossil fuel combustion products. The source of antimony is unknown, but may be attributed to off-site industrial sources. Common sources of manganese in groundwater include industrial effluent, sewage and landfill leachate. The source of manganese in groundwater is unknown, but may be attributed to off-site industrial sources. Given the subject property's location relative to the East River, which is a salt water tidal strait, elevated dissolved sodium concentrations in groundwater can likely attributed to salt water intrusion.

Data collected during the RI is sufficient to indicate that historical on-site and surrounding activities have not impacted the groundwater with VOCs or SVOCs above regulatory standards/guidance values.

5.4 Soil Vapor Chemistry

PVE Sheffler Soil Vapor Sample Results

The PVE Sheffler soil vapor analytical data were compared to the NYS Homes – Indoor/Outdoor 1997 to 2003 median and 99th percentile values for indoor air provided in *Final NYSDOH Guidance for Evaluating Soil Vapor Intrusion in the State of New York*, October 2006. Based upon the analytical data and information provided in the PVE Sheffler Limited Phase II ESA, as indicated on Table 1, VOCs were identified in the three sub-slab soil vapor samples that exceed median indoor air concentrations, as indicated in NYSDOH's *Final Guidance on Soil Vapor Intrusion, October 2006.* No VOCs were detected in sample SV-1 that exceed NYSDOH 99th percentile for indoor air values. Five VOCs, acetone, benzene, cyclohexane, heptane and hexane were detected in SV-2 at concentrations that exceed NYSDOH 99th percentile for indoor air values. Additionally, two VOCs, acetone and chloroform were detected in SV-3 at concentrations that exceed the NYSDOH 99th percentiles for indoor air values. Two compounds subject to NYSDEC Soil Vapor/Indoor Air matrices, tetrachloroethylene (PCE) and trichloroethene (TCE) were detected in sample SV-3 at concentrations of 2.2 and 0.71 micrograms per cubic meter (ug/m^3), respectively. However, based upon a comparison to the NYSDOH matrices, no monitoring or further action is required.

VHB Soil Vapor Sample Results

The analytical results for the sub-slab soil vapor sample VHB SV-1 were compared to the NYS Homes – Indoor/Outdoor 1997 to 2003 75th percentile values for indoor air provided in the NYSDOH Guidance.

No helium was detected in the soil vapor sample. Thus, the soil vapor data is considered to be indicative of the sub-slab conditions and a summary of the findings, below.

Based upon the results analytical laboratory data (as shown on Table 14), the presence of petroleum-related vapors were confirmed in the subsurface at concentrations above their respective NYSDOH 75th percentile concentrations for Indoor Air. Many of these compounds are constituents of gasoline (i.e., benzene, toluene, ethylbenzene and xylenes [BTEX], hexane

and heptane) and can either be attributed to historic gasoline spills that are associated with the Hess Station located proximate to the north of the subject property, or due to the historical industrial uses of the surrounding areas. Additional compounds present in sub slab soil vapor include those that are typical used in industrial solvents, including acetone, cyclohexane, 2-butanone (a.k.a. methyle ethyl ketone [MEK]) and carbon disulfide. Based upon the significantly elevated concentrations in the majority of these compounds (well above the 75th percentile), a soil vapor hazard exists at the subject property and should be mitigated in such a manner that would reduce exposure to future site occupants.

There were no compounds detected above laboratory MDLs in VHB SV-1 that are subject to the NYSDOH Soil Vapor/Indoor Air Matrices.

The soil vapor sample locations are provided on Figure 5.

5.5 Prior Activity

Based on an evaluation of the data and information from the RIR, disposal of significant amounts of hazardous waste is not suspected at this site.

5.6 Impediments to Remedial Action

Based upon the proposed sub-grade parking feature and basement to be constructed at the subject property, The terminal depth of excavation for the majority of the property is 11-feet 9.5-inches below grade surface, with an additional five-feet eight-inches in two elevator shaft locations.. Given that soil impacts are present below the terminal excavation depth, remedial action and removal of impacted material below the terminal excavation depth may not be feasible. There are no additionally known impediments to remedial action at this property.

Figures

FIGURE 1 – SITE LOCATION MAP

SITE NAME: Mixed-Use Properties
STREET ADDRESS 209, 211-235 McGuinness Boulevard
CITY, STATE, ZIP: Brooklyn, New York 11222
PROJECT NUMBER: 29345.00
SOURCE: United States Geological Survey

N

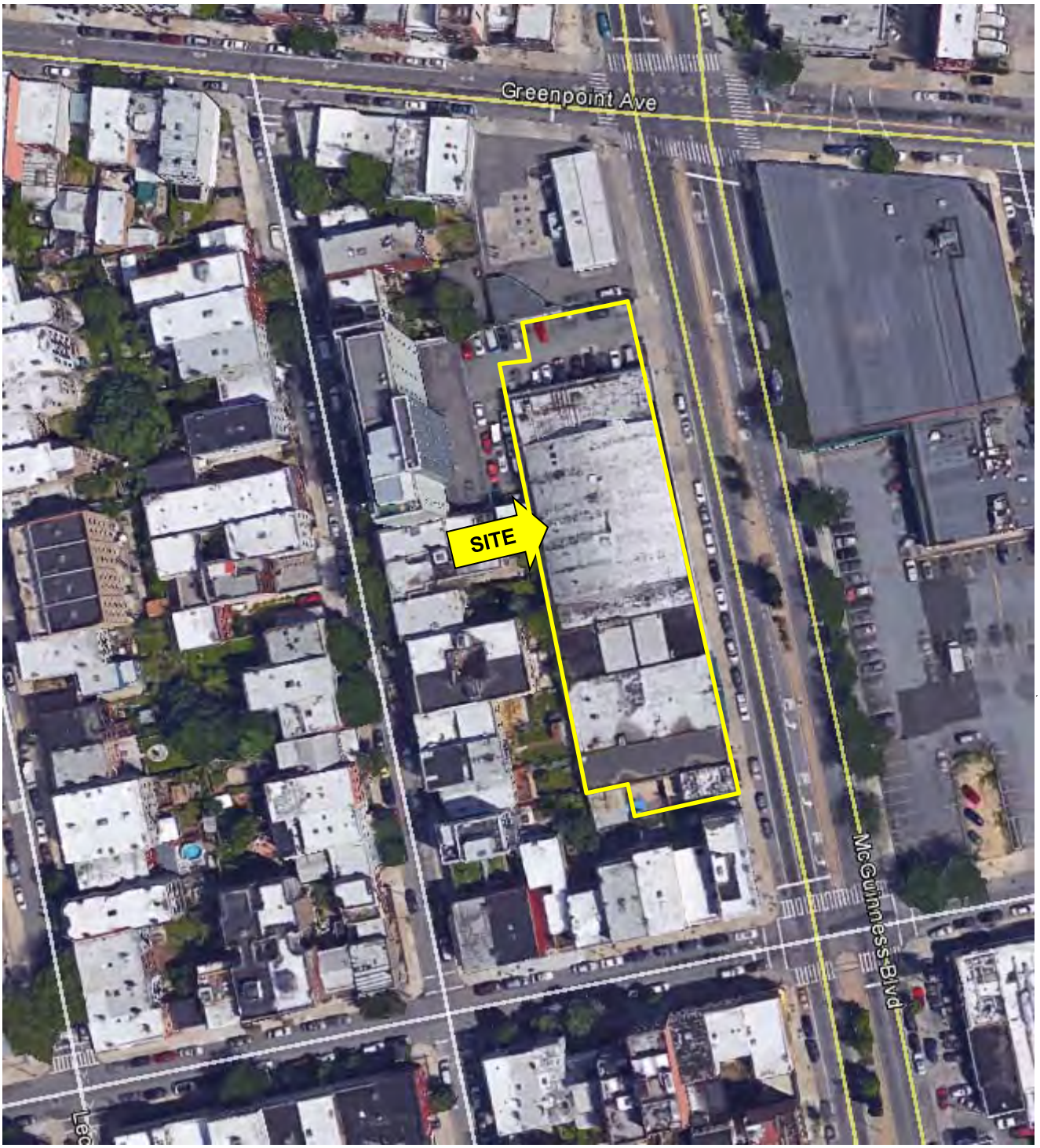

FIGURE 2 – SITE AERIAL

SITE NAME: Mixed-Use Properties
STREET ADDRESS 209, 211-235 McGuinness Boulevard
CITY, STATE, ZIP: Brooklyn, New York 11222
PROJECT NUMBER: 29345.00
SOURCE: Google Earth

N

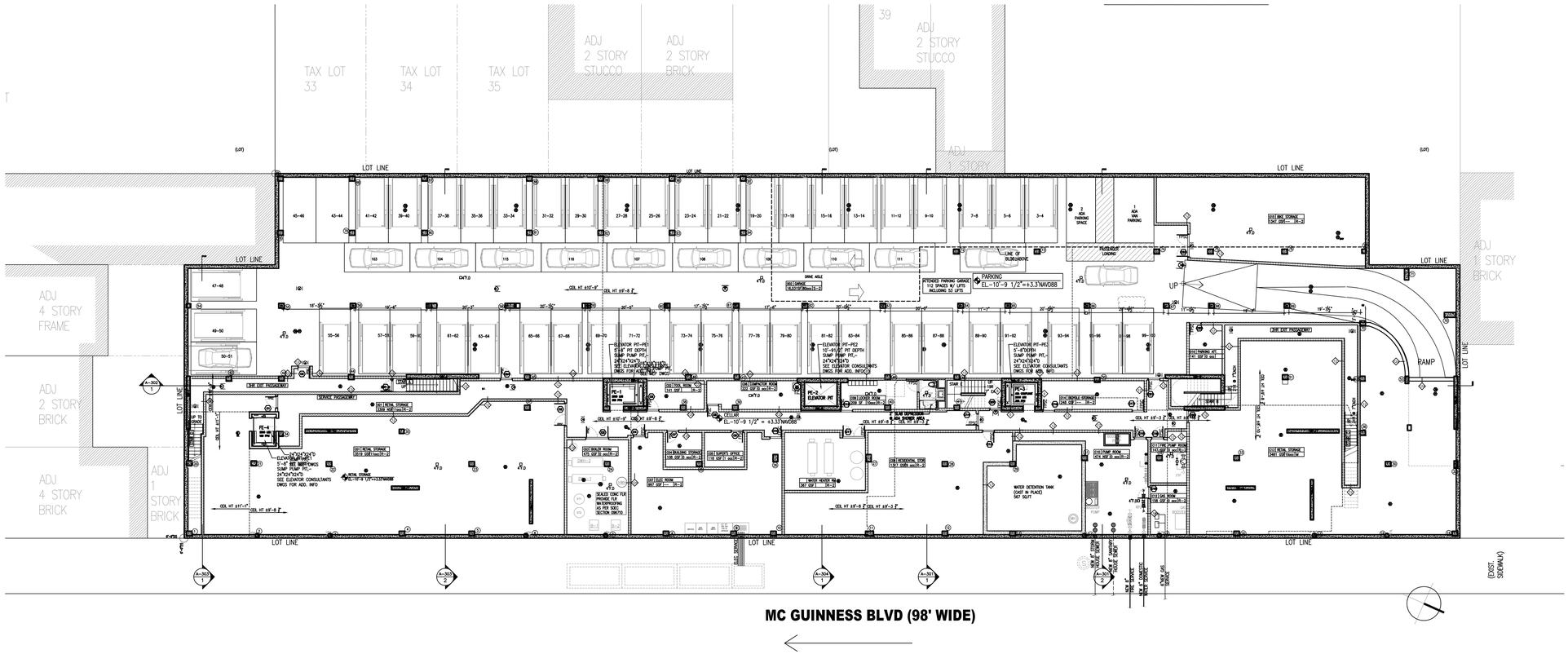

1 CELLAR FLOOR PLAN
1/16"=1'-0"

THE GENERAL CONTRACTOR SHALL CHECK AND VERIFY ALL DIMENSIONS AND REPORT ALL ERRORS AND OMISSIONS TO THE ARCHITECTS. DO NOT SCALE THE DRAWINGS. THIS DRAWING SHALL NOT BE USED FOR CONSTRUCTION PURPOSES UNTIL SIGNED BY THE CONSULTANTS.

REVISIONS:

#	DATE	DESCRIPTION

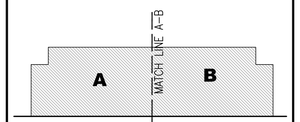

KEY PLAN

#	DATE	DESCRIPTION
5.	01/20/2015	PROGRESS SET
4.	01/16/2015	PROGRESS SET
3.	12/24/2014	ISSUED FOR HPD FILING
2.	11/17/2014	ISSUED FOR 50% DD SET
1.	10/08/2014	ISSUED FOR HPD FILING

ISSUED DRAWINGS:

GENE KAUFMAN ARCHITECT PC
525 BROADWAY, NEW YORK, N.Y. 10012
TEL. (212) 625-8700 FAX. (212) 625-8867

211 McGuinness
211 McGuinness Blvd, Brooklyn, NY

CELLAR FLOOR PLAN

SEAL & SIGNATURE:

DATE: JULY 28TH, 2014
SCALE: 1/8"=1'-0"
DRAWING NUMBER:
A-200.00
OF

Figure 3A - Proposed Redevelopment Plans

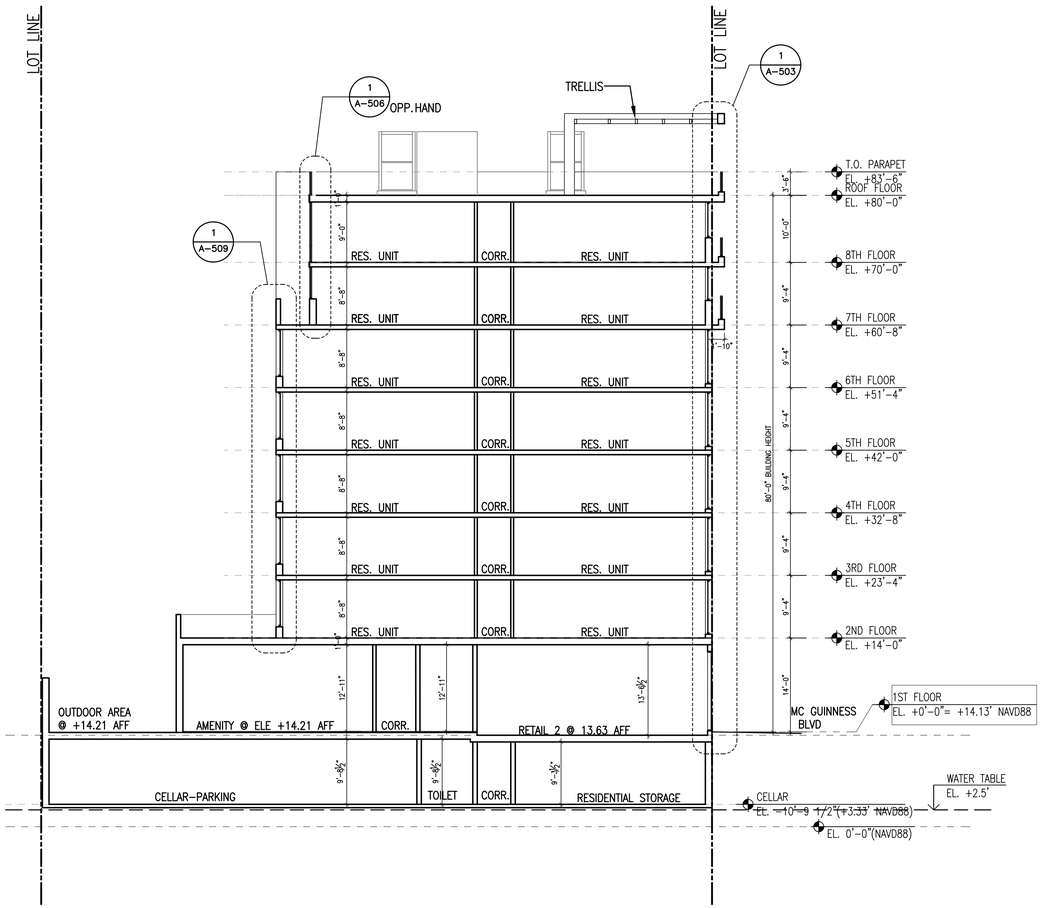

1 BUILDING SECTION
3/32"=1'-0"

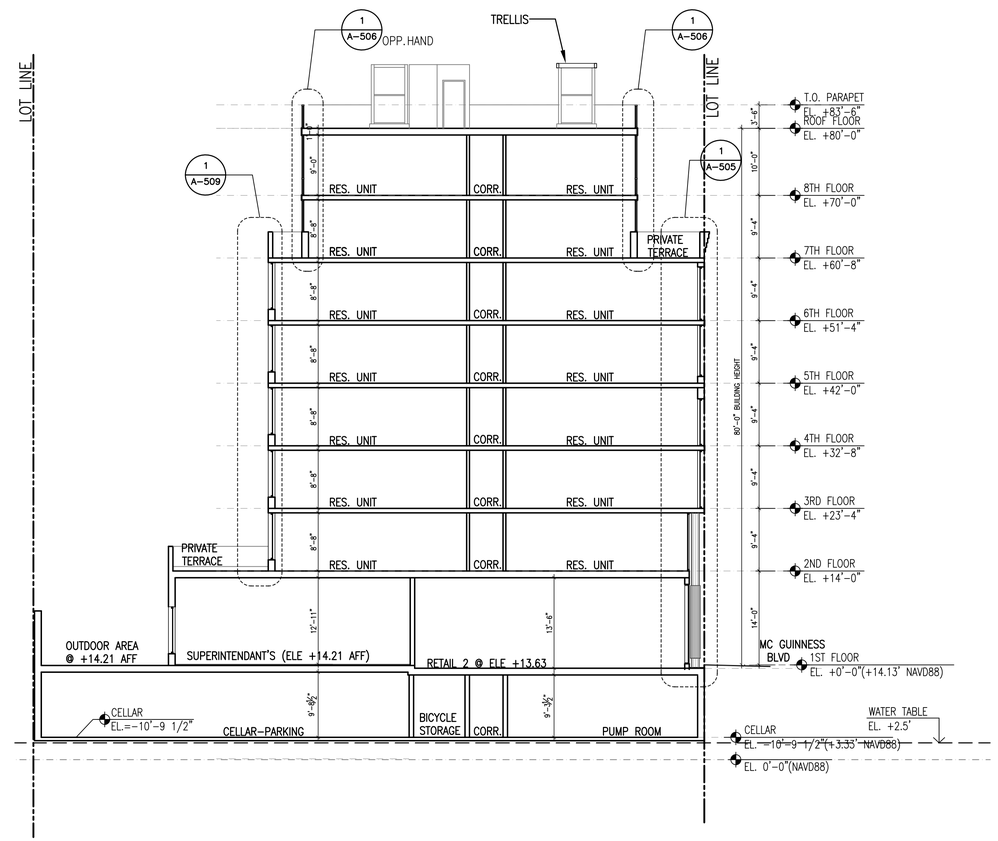

2 BUILDING SECTION
3/32"=1'-0"

THE GENERAL CONTRACTOR SHALL CHECK AND VERIFY ALL DIMENSIONS AND REPORT ALL ERRORS AND OMISSIONS TO THE ARCHITECTS. DO NOT SCALE THE DRAWINGS. THIS DRAWING SHALL NOT BE USED FOR CONSTRUCTION PURPOSES UNTIL SIGNED BY THE CONSULTANTS.

REVISIONS:

#	DATE	DESCRIPTION

	01-16-2015	DWGS FOR MEETING
	12-05-2014	DWGS FOR MEETING
	11-21-2014	DWGS FOR MEETING
	11-07-2014	DWGS FOR MEETING
	10-10-2014	DWGS FOR MEETING
	09-26-2014	DWGS FOR MEETING
	09-19-2014	DWGS FOR MEETING
	09-12-2014	DWGS FOR MEETING

5.	01/20/2015	PROGRESS SET
4.	01/16/2015	PROGRESS SET
3.	12/24/2014	ISSUED FOR HPD FILING
2.	11/17/2014	ISSUED FOR 50% DD SET
1.	10/08/2014	ISSUED FOR HPD FILING
#	DATE	DESCRIPTION

ISSUED DRAWINGS:

GENE KAUFMAN ARCHITECT PC
525 BROADWAY, NEW YORK, N.Y. 10012
TEL. (212) 625-8700 FAX. (212) 625-8867

211 McGuinness
211 McGuinness Blvd, Brooklyn, NY

BUILDING SECTIONS

SEAL & SIGNATURE:

DATE: JULY 28TH, 2014
SCALE: 3/32"=1'-0"
DRAWING NUMBER:
A-301.00
OF

Figure 3B - Proposed Redevelopment Plans

1 BLDG SECTION B–B'
1/16"=1'-0"

THE GENERAL CONTRACTOR SHALL CHECK AND VERIFY ALL DIMENSIONS AND REPORT ALL ERRORS AND OMISSIONS TO THE ARCHITECTS. DO NOT SCALE THE DRAWINGS. THIS DRAWING SHALL NOT BE USED FOR CONSTRUCTION PURPOSES UNTIL SIGNED BY THE CONSULTANTS.

REVISIONS:

#	DATE	DESCRIPTION

	12–05–2014	DWGS FOR MEETING
	11–21–2014	DWGS FOR MEETING
	11–07–2014	DWGS FOR MEETING
	10–10–2014	DWGS FOR MEETING

#	DATE	DESCRIPTION
5.	01/20/2015	PROGRESS SET
4.	01/16/2015	PROGRESS SET
3.	12/24/2014	ISSUED FOR HPD FILING
2.	11/17/2014	ISSUED FOR 50% DD SET
1.	10/08/2014	ISSUED FOR HPD FILING

ISSUED DRAWINGS:

GENE KAUFMAN ARCHITECT PC
525 BROADWAY, NEW YORK, N.Y. 10012
TEL. (212) 625-8700 FAX. (212) 625-8867

211 McGuinness
211 McGuinness Blvd, Brooklyn, NY

BLDG SECTION- B-B'

SEAL & SIGNATURE:

DATE: JULY 28TH, 2014
SCALE: 1/16"=1'-0"
DRAWING NUMBER:
A-302.00
OF

Figure 3C - Proposed Redevelopment Plans

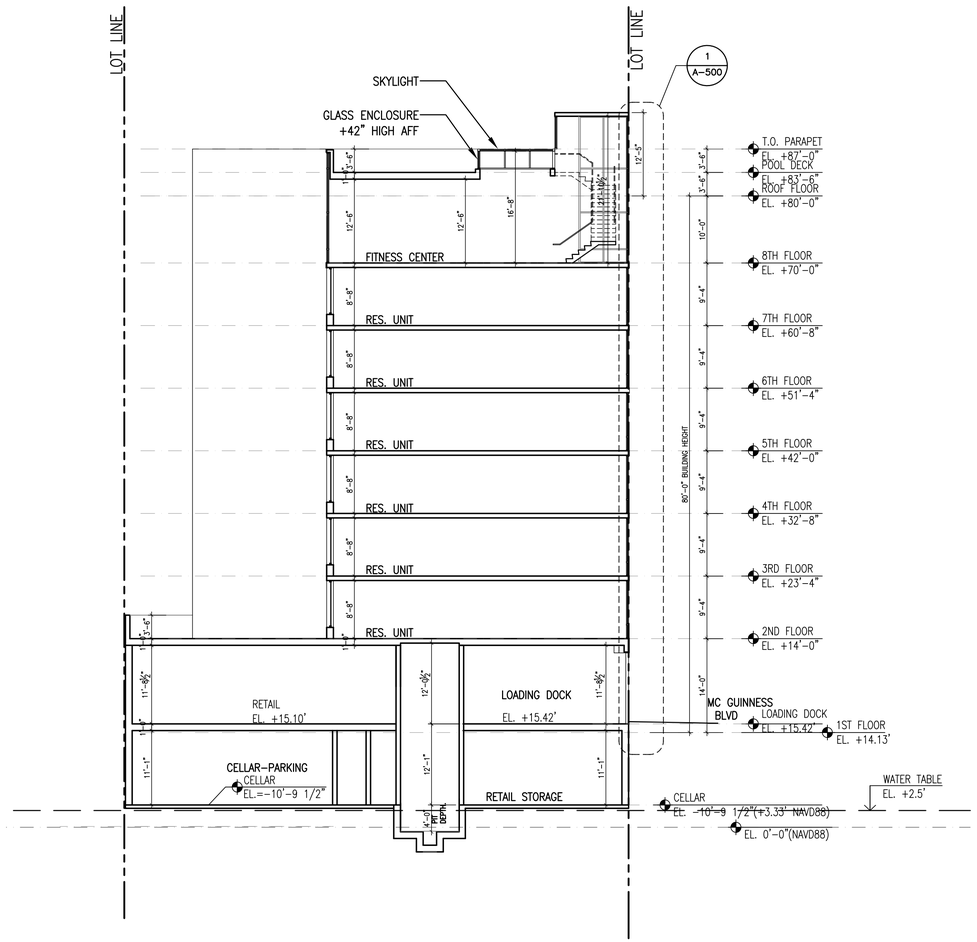

1 BUILDING SECTION
3/32"=1'-0"

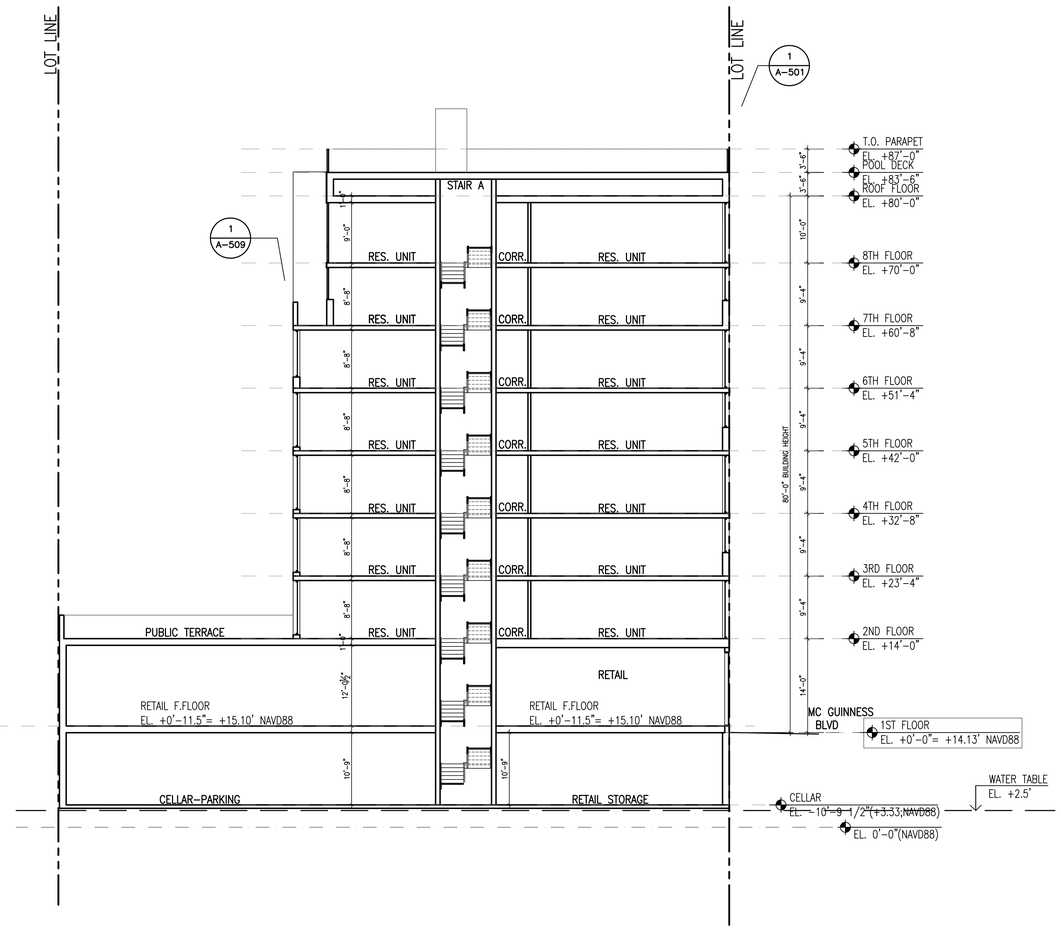

2 BUILDING SECTION
3/32"=1'-0"

THE GENERAL CONTRACTOR SHALL CHECK AND VERIFY ALL DIMENSIONS AND REPORT ALL ERRORS AND OMISSIONS TO THE ARCHITECTS. DO NOT SCALE THE DRAWINGS. THIS DRAWING SHALL NOT BE USED FOR CONSTRUCTION PURPOSES UNTIL SIGNED BY THE CONSULTANTS.

REVISIONS:

#	DATE	DESCRIPTION

01-16-2015	DWGS FOR MEETING	
12-05-2014	DWGS FOR MEETING	
11-21-2014	DWGS FOR MEETING	
11-14-2014	DWGS FOR MEETING	
11-07-2014	DWGS FOR MEETING	

#	DATE	DESCRIPTION
5.	01/20/2015	PROGRESS SET
4.	01/16/2015	PROGRESS SET
3.	12/24/2014	ISSUED FOR HPD FILING
2.	11/17/2014	ISSUED FOR 50% DD SET
1.	10/08/2014	ISSUED FOR HPD FILING

ISSUED DRAWINGS:

GENE KAUFMAN ARCHITECT PC
525 BROADWAY, NEW YORK, N.Y. 10012
TEL. (212) 625-8700 FAX. (212) 625-8867

211 McGuinness
211 McGuinness Blvd, Brooklyn, NY

BUILDING SECTIONS

SEAL & SIGNATURE:

DATE: JULY 28TH, 2014
SCALE: 3/32"=1'-0"
DRAWING NUMBER:
A-303.00
OF

Figure 3D - Proposed Redevelopment Plans

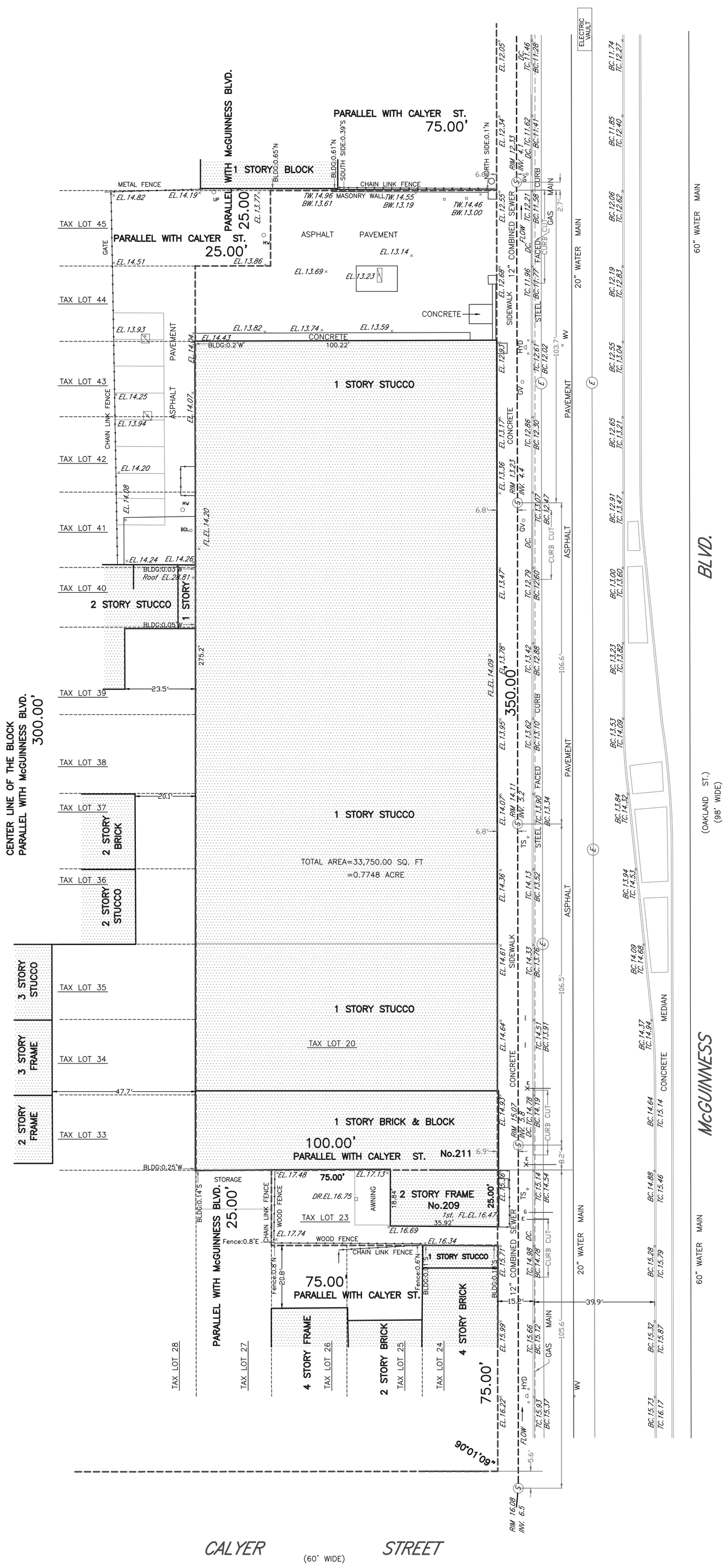

AREA:

TOTAL AREA=33,750.00 SQ. FT
=0.7748 ACRE

ZONING:

THE PROPERTY LIES IN ZONE C2-4

THE NEAREST SUBWAY IS MORE THAN 200' AWAY

NOTES:

1. ALL ELEVATIONS SHOWN HEREON REFERS TO NAVD88 DATUM.
2. ALL SUBSURFACE UTILITIES SHOWN HEREON WERE OBTAINED FROM CITY DEPARTMENTS & PRIVATE UTILITY COMPANIES & THE LOCATION OF SAID UTILITIES ARE APPROXIMATE ONLY & NOT GUARANTEED BY THE SURVEYOR. CONSULT APPROPRIATE DEPARTMENT OR COMPANY BEFORE DESIGNING ANY CONNECTIONS.
3. NONVISIBLE EASEMENTS, RECORDED OR UNRECORDED, ARE NOT SHOWN.
4. ESTABLISHED GRADES REFER TO CENTER LINE OF STREET.
5. THIS IS TO CERTIFY THAT THERE ARE NO STREAMS NOR NATURAL WATERCOURSES IN THE PROPERTY AS SHOWN ON THE SURVEY.
6. UNDERGROUND FOUNDATIONS OR SUBSTRUCTURES, NOT VISIBLE,NOT SHOWN.

LEGEND:

BC. .... BOTTOM OF CURB ELEVATION
.... CATCH BASIN
DC. .... DROP CURB (DRIVEWAY)
(E) ..... ELECTRIC MANHOLE
EL. ..... ELEVATION
GV. .... GAS VALVE
HYD..... FIRE HYDRANT
LG. .....LEGAL GRADE
.... LIGHT POLE
(S) .... SEWER MANHOLE
(T) .... TELEPHONE MANHOLE
TC. .... TOP OF CURB ELEVATION
(W) .... WATER MANHOLE
WV. .... WATER VALVE
14"TR .... 14" DIAMETER TREE

SCALE: 1" = 20'

0 1 2 3 4 5 INCHES
0 20 40 60 80 100 FEET

UNAUTHORIZED ALTERATION OR ADDITION TO THIS SURVEY IS A VIOLATION OF SECTION 7209(2) OF THE NEW YORK STATE EDUCATION LAW.

ONLY COPIES FROM THE ORIGINAL OF THIS SURVEY MARKED WITH AN ORIGINAL OF THE LAND SURVEYOR'S INKED SEAL OR EMBOSSED SEAL SHALL BE CONSIDERED A VALID TRUE COPY.

CERTIFICATIONS INDICATED HEREON SHALL RUN ONLY TO THE PERSON FOR WHOM THE SURVEY IS PREPARED AND ON HIS/HER BEHALF TO THE TITLE COMPANY, GOVERNMENTAL AGENCY AND LENDING INSTITUTION LISTED HEREON AND TO THE ASSIGNEES OF THE LENDING INSTITUTION.

CERTIFICATIONS ARE NOT TRANSFERABLE TO ADDITIONAL INSTITUTIONS OR SUBSEQUENT OWNERS.

SCALE:1":20'

MAP OF SURVEY
OF PROPERTY AT
BROOKLYN

AUTAR LAND SURVEYING,P.C.
214-43 JAMAICA AVENUE
QUEENS VILLAGE, N.Y. 11428
TEL (718) 740-1339
FAX (718) 740-0024
Email: adjoodia@aol.com

TAX MAP DESIGNATION:
SECTION : 9
BLOCK : 2576
LOT : 20 & 23

SURVEYED: SEPTEMBER 17, 2014

BOROUGH OF BROOKLYN
COUNTY OF KINGS
STATE OF NEW YORK

5650 SM

Figure 4 - Property Survey

© 2014 COPYRIGHT AUTAR LAND SURVEYING,P.C
www.autarlandsurveying.com

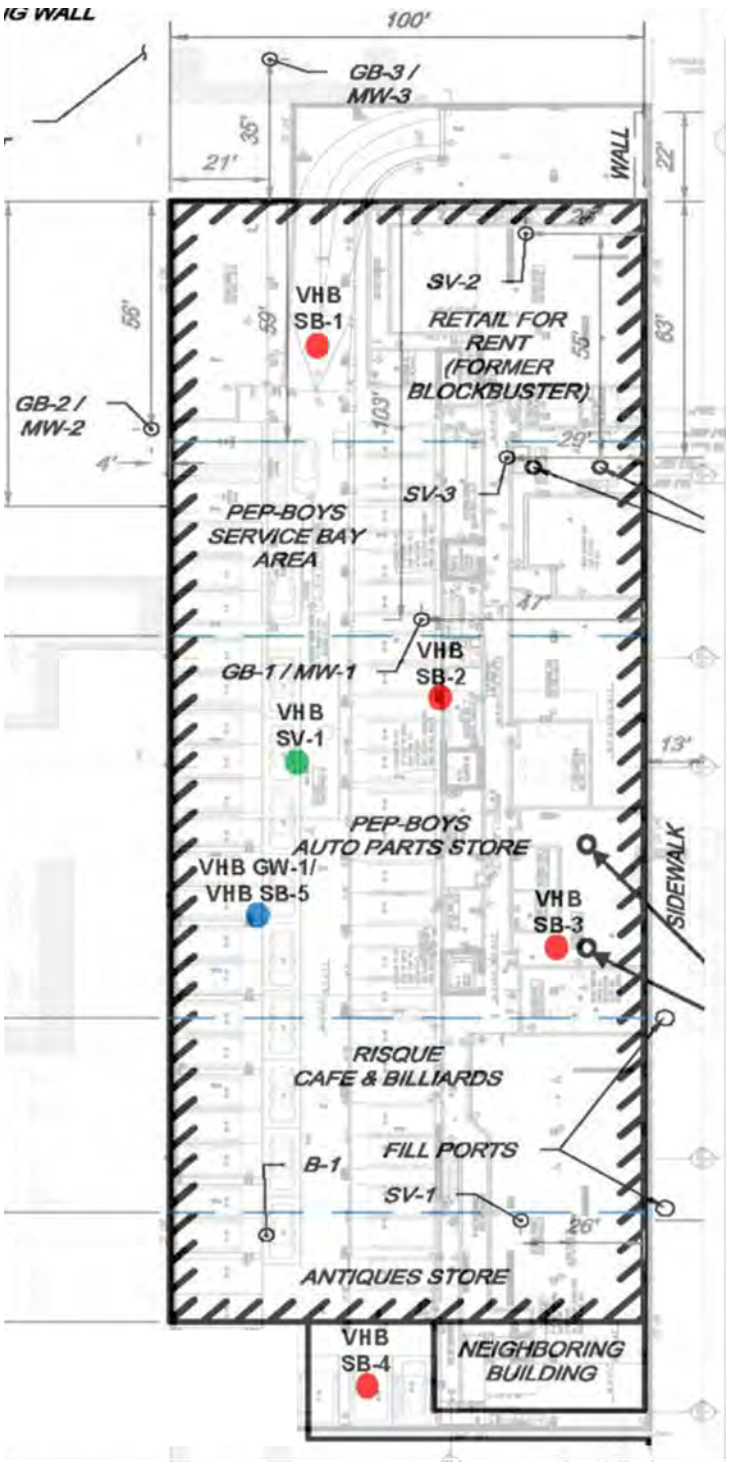

FIGURE 5 – SAMPLE LOCATIONS

SITE NAME: Mixed-Use Properties
STREET ADDRESS 209, 211-235 McGuinness Boulevard
CITY, STATE, ZIP: Brooklyn, New York 11222
PROJECT NUMBER: 29345.00
BASE MAP SOURCE: PVE Sheffler, Stellar Management

N

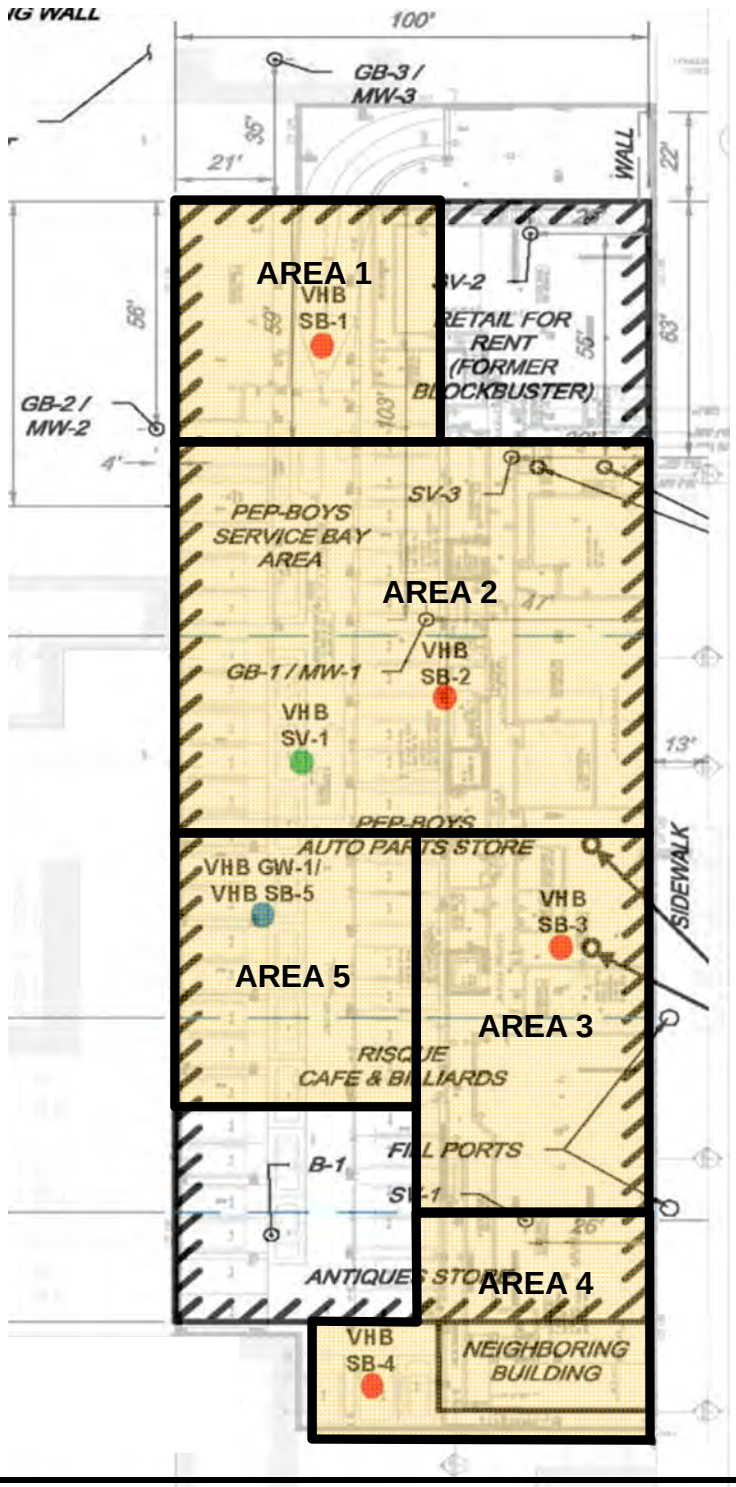

FIGURE 6 –AREAS OF CONCERN

SITE NAME: Mixed-Use Properties
STREET ADDRESS 209, 211-235 McGuinness Boulevard
CITY, STATE, ZIP: Brooklyn, New York 11222
PROJECT NUMBER: 29345.00
BASE MAP SOURCE: PVE Sheffler, Stellar Management

N

■

Tables

Table 1. **Volatile Organic Compounds (VOCs) in Vapor Samples**
USEPA TO-15; collected **March 3, 2014**
211-235 McGuinness Blvd, Brooklyn, New York
PVE Sheffler File #500008

		NYSDOH 2003 Median Concentration (1)	NYSDOH 2003 99th Percentile Concentration (2)	Sample Identification								
				SV-1			SV-2			SV-3		
				sub-slab sample (antiques store)			sub-slab sample (subgrade basement)			sub-slab sample (Pep Boys service area)		
Constituent	CAS number			Result	Detection Limit	Qualifier	Result	Detection Limit	Qualifier	Result	Detection Limit	Qualifier
1,1,1-Trichloroethane	71-55-6	0.3	41	ND<	0.83		ND<	0.83		ND<	0.83	
1,1,2,2-Tetrachloroethane	79-34-5	<0.25	0.8	ND<	1		ND<	1		ND<	1	
1,1,2-Trichloroethane	79-00-5	<0.25	1	ND<	0.83		ND<	0.83		ND<	0.83	
1,1-Dichloroethane	75-34-3	<0.25	0.4	ND<	0.62		ND<	0.62		ND<	0.62	
1,1-Dichloroethene	75-35-4	<0.25	6.3	ND<	0.6		ND<	0.6		ND<	0.6	
1,2,4-Trichlorobenzene	120-82-1	<0.25	26	ND<	1.1		ND<	1.1		ND<	1.1	
1,2,4-Trimethylbenzene	95-63-6	1.9	35	**3.8**	0.75		**5.4**	0.75		**5.8**	0.75	
1,2-Dibromoethane	106-93-4	<0.25	<0.25	ND<	1.2		ND<	1.2		ND<	1.2	
1,2-Dichlorobenzene	95-50-1	<0.25	2.3	ND<	0.92		ND<	0.92		ND<	0.92	
1,2-Dichloroethane	107-06-2	<0.25	0.4	ND<	0.62		ND<	0.62		ND<	0.62	
1,2-Dichloropropane	78-87-5	<0.25	9	ND<	0.7		ND<	0.7		ND<	0.7	
1,3,5-Trimethylbenzene	108-67-8	0.6	25	**1.2**	0.75		**1.9**	0.75		**1.7**	0.75	
1,3-butadiene	106-99-0	NA	NA	ND<	0.34		ND<	0.34		ND<	0.34	
1,3-Dichlorobenzene	541-73-1	<0.25	1.6	ND<	0.92		ND<	0.92		ND<	0.92	
1,4-Dichlorobenzene	106-46-7	<0.25	25	ND<	0.92		ND<	0.92		ND<	0.92	
1,4-Dioxane	123-91-1	NA	NA	ND<	1.1		ND<	1.1		1	1.1	J
2,2,4-trimethylpentane	540-84-1	NA	NA	1.9	0.71		690	570		3.6	0.71	
4-ethyltoluene	622-96-8	2.1	120	1.5	0.75		**3.2**	0.75		1.6	0.75	
Acetone	67-64-1	21	200	**41**	7.2		**310**	580	J	**790**	200	
Allyl chloride	107-05-1	NA	NA	ND<	0.48		ND<	0.48		ND<	0.48	
Benzene	71-43-2	2.1	120	**2.7**	0.49		**3,200**	390		**4.8**	0.49	
Benzyl chloride	100-44-7	NA	NA	ND<	0.88		ND<	0.88		ND<	0.88	
Bromodichloromethane	75-27-4	NA	NA	ND<	1		ND<	1		1.4	1	
Bromoform	75-25-2	NA	NA	ND<	1.6		ND<	1.6		ND<	1.6	
Bromomethane	74-83-9	<0.25	3.2	ND<	0.59		ND<	0.59		ND<	0.59	
Carbon disulfide	75-15-0	NA	NA	0.38	0.47	J	7	4.7		11	4.7	
Carbon tetrachloride	56-23-5	<0.25	3.2	ND<	0.96		ND<	0.96		ND<	0.96	
Chlorobenzene	108-90-7	<0.25	3.2	ND<	0.7		ND<	0.7		ND<	0.7	
Chloroethane	75-00-3	<0.25	0.9	ND<	0.4		ND<	0.4		ND<	0.4	
Chloroform	67-66-3	<0.25	13	**0.5**	0.74	J	ND<	0.74		**27**	7.4	
Chloromethane	74-87-3	0.5	14	ND<	0.31		ND<	0.31		ND<	0.31	
cis-1,2-Dichloroethene	156-59-2	<0.25	4.6	ND<	0.6		ND<	0.6		ND<	0.6	
cis-1,3-Dichloropropene	10061-01-5	<0.25	2.1	ND<	0.69		ND<	0.69		ND<	0.69	
Cyclohexane	110-82-7	0.8	88	**2.7**	0.52		**9,100**	870		**66**	5.2	
Dibromochloromethane	124-48-1	NA	NA	ND<	1.3		ND<	1.3		ND<	1.3	
Ethyl acetate	141-78-6	NA	NA	ND<	0.92		ND<	0.92		ND<	0.92	
Ethylbenzene	100-41-4	1	26	**1.9**	0.66		ND<	0.66		**18**	6.6	
Freon 11	75-69-4	NA	NA	2.3	0.86		1.5	0.86		17	8.6	
Freon 113	76-13-1	NA	NA	ND<	1.2		ND<	1.2		ND<	1.2	
Freon 114	76-14-2	<0.25	23	ND<	1.1		ND<	1.1		ND<	1.1	
Freon 12	75-71-8	<0.25	180	**2.9**	0.75		**2.7**	0.75		**2.7**	0.75	
Heptane	142-82-5	2.8	72	1.6	0.62		**2,400**	500		**9.6**	6.2	
Hexachloro-1,3-butadiene	87-68-3	<0.25	29	ND<	1.6		ND<	1.6		ND<	1.6	
Hexane	110-54-3	1.6	93	**5.5**	0.54		**3,900**	430		**41**	5.4	
Isopropyl alcohol	67-63-0	NA	NA	6	3.7		ND<	0.37		ND<	0.37	
m&p-Xylene	79601-23-1	1.5	46	**5.6**	1.3		ND<	1.3		**35**	13	
Methyl Butyl Ketone	591-78-6	0.3	16	ND<	1.2		ND<	1.2		ND<	1.2	
Methyl Ethyl Ketone	78-93-3	3.4	79	2	0.9		ND<	0.9		**22**	9	
Methyl Isobutyl Ketone	108-10-1	0.3	16	ND<	1.2		ND<	1.2		ND<	1.2	
Methyl tert-butyl ether	1634-04-4	0.8	230	ND<	0.55		ND<	0.55		ND<	0.55	
Methylene chloride	75-09-2	1.4	310	**2.2**	0.53		**6**	0.53		1.1	0.53	
o-Xylene	95-47-6	1.1	32	**1.4**	0.66		ND<	0.66		**6.4**	0.66	
Propylene	115-07-1	NA	NA	ND<	0.26		ND<	0.26		ND<	0.26	
Styrene	100-42-5	0.3	6.2	**0.48**	0.65	J	ND<	0.65		ND<	0.65	

Table 1. **Volatile Organic Compounds (VOCs) in Vapor Samples**
USEPA TO-15; collected **March 3, 2014**
211-235 McGuinness Blvd, Brooklyn, New York
PVE Sheffler File #500008

		NYSDOH 2003 Median Concentration (1)	NYSDOH 2003 99th Percentile Concentration (2)	Sample Identification								
				SV-1			SV-2			SV-3		
				sub-slab sample (antiques store)			sub-slab sample (subgrade basement)			sub-slab sample (Pep Boys service area)		
Constituent	CAS number			Result	Detection Limit	Qualifier	Result	Detection Limit	Qualifier	Result	Detection Limit	Qualifier
Tetrachloroethylene	127-18-4	0.3	20	ND<	1		ND<	1		**2.2**	1	
Tetrahydrofuran	109-99-9	<0.25	19	ND<	0.45		ND<	0.45		ND<	0.45	
Toluene	108-88-3	9.6	300	8.1	0.57		**90**	5.7		**69**	5.7	
trans-1,2-Dichloroethene	156-60-5	NA	NA	ND<	0.6		ND<	0.6		ND<	0.6	
trans-1,3-Dichloropropene	10061-02-6	<0.25	<0.25	ND<	0.69		ND<	0.69		ND<	0.69	
Trichloroethene	79-01-6	<0.25	7.4	ND<	0.82		ND<	0.82		**0.71**	0.82	J
Vinyl acetate	108-05-4	NA	NA	ND<	0.54		ND<	0.54		ND<	0.54	
Vinyl Bromide	593-60-2	NA	NA	ND<	0.67		ND<	0.67		ND<	0.67	
Vinyl chloride	75-01-4	<0.25	0.8	ND<	0.39		ND<	0.39		ND<	0.39	

Notes:

All units are $\mu g/m^3$ unless otherwise noted

IA prefix represents ambient indoor air samples

Boldface type indicates exceedance of NYSDOH median concentration, October 2006, Appendix C

Boldface and highlighted indicates exceedance of NYSDOH 99th percentile concentration, October 2006, Appendix C

ND = Not detected at the reporting limit

J = Analyte detected at or below quantitation limits

B =Compound found in associated method blank

E = Estimated, concentration exceeds calibration range

S = Spike recovery outside accepted recovery limits

1- NYSDOH "Guidance for Evaluating Soil Vapor Intrusion in the State of New York," October 2006, Appendix C.1 NYSDOH 2003: Study of Volatile Organic Chemicals in Air of Fuel Oil Heated Homes, 1997-2003, Indoor Air- Median Result

2- NYSDOH "Guidance for Evaluating Soil Vapor Intrusion in the State of New York," October 2006, Appendix C.1 NYSDOH 2003: Study of Volatile Organic Chemicals in Air of Fuel Oil Heated Homes, 1997-2003, Indoor Air- 99th Percentile Result

NA = Analyte not analyzed in NYSDOH 2003 study

Table 2. **Part 375 Metals (ICP)** in **Soil Boring Samples;** USEPA Method 6010C, 3050, 7196, 9014 & 7471B collected **March 3, 2014**; 211-235 McGuinness Blvd., Brooklyn, New York 11222
PVE Sheffler File #500008

Chemical Constituent	NYSDEC Limit[1]	NYSDEC Limit[2]	Sample ID GB -1 14-16'	Sample ID GB-2 12-14'	Sample ID GB-3 14-16'	Sample ID B-1 8.5-10'
Metals						
Arsenic	13	16	3.35	3.17	3.55	2.75
Barium	350	400	20.8	27.6	32.7	21.8
Beryllium	7.2	72	ND<0.581	ND<0.647	ND<0.662	ND<0.537
Cadmium	2.5	4.3	ND<0.581	ND<0.647	ND<0.662	ND<0.537
Chromium	30*	36*	26.3	14.5	18.8	12.3
Copper	50	270	10.2	9.61	8.5	7.85
Cyanide, Total	27	27	ND<0.57	ND<0.59	ND<0.59	ND<0.55
Chrome, Hexavalent	1	110	ND<1.2	ND<1.2	ND<1.2	ND<1.1
Lead	63	400	3.14	7.1	3.62	3.36
Manganese	1600	2000	167	171	127	133
Mercury	0.18	0.81	ND<0.0190	ND<0.0197	ND<0.0234	ND<0.0181
Nickel	30	310	20.6	9.35	10.3	10.5
Selenium	3.9	180	ND<1.16	ND<1.29	ND<1.32	ND<1.07
Silver	2	180	ND<1.16	ND<1.29	ND<1.32	ND<1.07
Zinc	109	10000	30.4	28.8	28.7	25.7

Notes:

1 – Standards are for soils according 6NYCRR Part 375, *Unrestricted Use Soil Cleanup Objectives* ;

2 - Standards are for soils according 6NYCRR Part 375, *Restricted-Residential Use Soil Cleanup Objectives* ;

* NYSDEC limit for trivalent Chromium is listed;

Standards are for respective Soil Cleanup Objectives per NYSDEC Part 375

All concentrations are in mg/kg unless otherwise indicated;

Boldface type designates those compounds detected at concentrations exceeding NYSDEC standards;

NE = No standard established.

MDL = Method Detection Limit

ND= Not detected at MDL for sample.

Table 3. **Volatile Organic Compounds (VOCs) in Soil Boring Samples;** USEPA Method 8260C & 50
collected **March 3, 2014**; 211-235 McGuinness Blvd., Brooklyn, New York 11222
PVE Sheffler File #500008

Chemical Constituent	NYSDEC Limit[1]	NYSDEC Limit[2]	Sample ID GB -1 14-16'	Sample ID GB-2 12-14'	Sample ID GB-3 14-16'	Sample ID B-1 8.5-10'
VOCs						
1,1,1-Trichloroethane	680	100,000	ND<6.82	ND<7.78	ND<6.92	ND<7.70
1,1,2,2-Tetrachloroethane	NE	NE	ND<6.82	ND<7.78	ND<6.92	ND<7.70
1,1,2-Trichloroethane	NE	NE	ND<6.82	ND<7.78	ND<6.92	ND<7.70
1,1-Dichloroethane	270	26,000	ND<6.82	ND<7.78	ND<6.92	ND<7.70
1,1-Dichloroethene	330	100,000	ND<6.82	ND<7.78	ND<6.92	ND<7.70
1,2,3-Trichlorobenzene	NE	NE	ND<17.0	ND<19.4	ND<17.3	ND<19.2
1,2,4-Trichlorobenzene	NE	NE	ND<17.0	ND<19.4	ND<17.3	ND<19.2
1,2,4-Trimethylbenzene	3,600	52,000	ND<6.82	ND<7.78	ND<6.92	ND<7.70
1,2-Dibromo-3-Chloropropane	NE	NE	ND<34.1	ND<38.9	ND<34.6	ND<38.5
1,2-Dibromoethane	NE	NE	ND<6.82	ND<7.78	ND<6.92	ND<7.70
1,2-Dichlorobenzene	1,100	100,000	ND<6.82	ND<7.78	ND<6.92	ND<7.70
1,2-Dichloroethane	20	3,100	ND<6.82	ND<7.78	ND<6.92	ND<7.70
1,2-Dichloropropane	NE	NE	ND<6.82	ND<7.78	ND<6.92	ND<7.70
1,3,5-Trimethylbenzene	8,400	52,000	ND<6.82	ND<7.78	ND<6.92	ND<7.70
1,3-Dichlorobenzene	2,400	49,000	ND<6.82	ND<7.78	ND<6.92	ND<7.70
1,4-Dichlorobenzene	1,800	13,000	ND<6.82	ND<7.78	ND<6.92	ND<7.70
1,4-dioxane	100	13,000	ND<68.2	ND<77.8	ND<69.2	ND<77.0
2-Butanone	NE	NE	ND<34.1	ND<38.9	ND<34.6	ND<38.5
2- Hexanone	NE	NE	ND<17.0	ND<19.4	ND<17.3	ND<19.2
4-Methyl-2-pentanone	NE	NE	ND<17.0	ND<19.4	ND<17.3	ND<19.2
Acetone	50	100,000	**139**	ND<38.9	38.7	ND<38.5
Benzene	60	4,800	ND<6.82	ND<7.78	ND<6.92	ND<7.70
Bromochloromethane	NE	NE	ND<17.0	ND<19.4	ND<17.3	ND<19.2
Bromodichloromethane	NE	NE	ND<6.82	ND<7.78	ND<6.92	ND<7.70
Bromoform	NE	NE	ND<17.0	ND<19.4	ND<17.3	ND<19.2
Bromomethane	NE	NE	ND<6.82	ND<7.78	ND<6.92	ND<7.70
Carbon disulfide	NE	NE	ND<6.82	ND<7.78	ND<6.92	ND<7.70
Carbon tetrachloride	760	2,400	ND<6.82	ND<7.78	ND<6.92	ND<7.70
Chlorobenzene	1,100	100,000	ND<6.82	ND<7.78	ND<6.92	ND<7.70
Chloroethane	NE	NE	ND<6.82	ND<7.78	ND<6.92	ND<7.70
Chloroform	370	49,000	ND<6.82	ND<7.78	ND<6.92	ND<7.70
Chloromethane	NE	NE	ND<6.82	ND<7.78	ND<6.92	ND<7.70
cis-1,2-Dichloroethene	250	100,00	ND<6.82	ND<7.78	ND<6.92	ND<7.70
cis-1,3- Dichloropropene	190	100,00	ND<6.82	ND<7.78	ND<6.92	ND<7.70
Cyclohexane	NE	NE	ND<34.1	ND<38.9	ND<34.6	ND<38.5
Dibromochloromethane	NE	NE	ND<6.82	ND<7.78	ND<6.92	ND<7.70
Dichlorodifluoromethane	NE	NE	ND<6.82	ND<7.78	ND<6.92	ND<7.70
Ethylbenzene	1,000	41,000	ND<6.82	ND<7.78	ND<6.92	ND<7.70

Freon 113	NE	NE	ND<6.82	ND<7.78	ND<6.92	ND<7.70
Isopropylbenzene	NE	NE	ND<6.82	ND<7.78	ND<6.92	ND<7.70
m/p-Xylene	260	100,000	ND<6.82	ND<7.78	ND<6.92	ND<7.70
Methyl acetate	NE	NE	ND<6.82	ND<7.78	ND<6.92	ND<7.70
Methyl tert-butyl ether	930	100,000	ND<6.82	ND<7.78	ND<6.92	ND<7.70
Methylcyclohexane	NE	NE	ND<6.82	ND<7.78	ND<6.92	ND<7.70
Methylene chloride	50	100,000	ND<17.0	ND<19.4	ND<17.3	ND<19.2
Naphthalene	NE	NE	ND<17.0	ND<19.4	ND<17.3	ND<19.2
n-Butylbenzene	12,000	NE	ND<6.82	ND<7.78	ND<6.92	ND<7.70
n-propylbenzene	3,900	100,000	ND<6.82	ND<7.78	ND<6.92	ND<7.70
o-Xylene	NE	NE	ND<6.82	ND<7.78	ND<6.92	ND<7.70
p-Isopropyltoulene	NE	NE	ND<6.82	ND<7.78	ND<6.92	ND<7.70
sec-Butylbenxene	11,000	100,000	ND<6.82	ND<7.78	ND<6.92	ND<7.70
Styrene	NE	NE	ND<17.0	ND<19.4	ND<17.3	ND<19.2
tert-Butylbenzene	5,900	100,000	ND<6.82	ND<7.78	ND<6.92	ND<7.70
Tetrachloroethene	1,300	19,000	ND<6.82	ND<7.78	ND<6.92	ND<7.70
Toluene	700	100,000	ND<6.82	ND<7.78	ND<6.92	ND<7.70
trans-1,2-Dichloroethene	190	100,000	ND<6.82	ND<7.78	ND<6.92	ND<7.70
trans-1,3- Dichloropropene	NE	NE	ND<6.82	ND<7.78	ND<6.92	ND<7.70
Trichloroethene	470	21,000	ND<6.82	ND<7.78	ND<6.92	ND<7.70
Trichlorofluormethane	NE	NE	ND<6.82	ND<7.78	ND<6.92	ND<7.70
Vinyl Chloride	20	900	ND<6.82	ND<7.78	ND<6.92	ND<7.70

Notes:

1 – Standards are for soils according 6NYCRR Part 375, Unrestricted Use Soil Cleanup Objectives;

2 - Standards are for soils according 6NYCRR Part 375, Restricted-Residential Use Soil Cleanup Objectives;

All concentrations are in ug/kg unless otherwise indicated;

Boldface type designates those compounds detected at concentrations exceeding NYSDEC standards;

NE = No standard established.

MDL = Method Detection Limit

ND= Not detected at MDL for sample.

Table 4. **Semi-Volatile Organics (Acid/Base Neutrals) in Soil Boring Samples;** USEPA Method 8270D & 3550C

collected **March 3, 2014**; 211-235 McGuinness Blvd., Brooklyn, New York 11222

PVE Sheffler File #500008

Chemical Constituent	NYSDEC Limit[1]	NYSDEC Limit[2]	Sample ID GB -1 14-16'	Sample ID GB-2 12-14'	Sample ID GB-3 14-16'	Sample ID B-1 8.5-10'
SVOCs (Acid/Base Neutrals)						
1,1-Biphenyl	NE	NE	ND<325	ND<334	ND<328	ND<315
1,2,4,5-Tetrachlorobenzene	NE	NE	ND<325	ND<334	ND<328	ND<315
1,2,4-Trichlorobenzene	NE	NE	ND<325	ND<334	ND<328	ND<315
1,2-Dichlorobenzene	NE	NE	ND<325	ND<334	ND<328	ND<315
1,3-Dichlorobenzene	NE	NE	ND<325	ND<334	ND<328	ND<315
1,4-Dichlorobenzene	NE	NE	ND<325	ND<334	ND<328	ND<315
2,3,4,6-Tetrachlorophenol	NE	NE	ND<325	ND<334	ND<328	ND<315
2,4,5-Trichlorophenol	NE	NE	ND<651	ND<668	ND<656	ND<630
2,4,6-Trichlorophenol	NE	NE	ND<325	ND<334	ND<328	ND<315
2,4-Dichlorophenol	NE	NE	ND<325	ND<334	ND<328	ND<315
2,4-Dimethylphenol	NE	NE	ND<325	ND<334	ND<328	ND<315
2,4-Dinitrophenol	NE	NE	ND<651	ND<668	ND<656	ND<630
2,4-Dinitrotoluene	NE	NE	ND<325	ND<334	ND<328	ND<315
2,6-Dinitrotoluene	NE	NE	ND<325	ND<334	ND<328	ND<315
2-Chloronaphthalene	NE	NE	ND<325	ND<334	ND<328	ND<315
2-Chlorophenol	NE	NE	ND<325	ND<334	ND<328	ND<315
2-Methylnaphthalene	NE	NE	ND<325	ND<334	ND<328	ND<315
2-Methylphenol	NE	NE	ND<325	ND<334	ND<328	ND<315
2-Nitroaniline	NE	NE	ND<651	ND<668	ND<656	ND<630
2-Nitrophenol	NE	NE	ND<325	ND<334	ND<328	ND<315
3 & 4 Methylphenol	NE	NE	ND<325	ND<334	ND<328	ND<315
3,3'-Dichlorobenzidine	NE	NE	ND<325	ND<334	ND<328	ND<315
3-Nitroaniline	NE	NE	ND<651	ND<668	ND<656	ND<630
4,6-Dinitro-2-methylphenol	NE	NE	ND<651	ND<668	ND<656	ND<630
4-Bromophenyl phenyl ether	NE	NE	ND<325	ND<334	ND<328	ND<315
4-Chloro-3-methylphenol	NE	NE	ND<325	ND<334	ND<328	ND<315
4-Chloroaniline	NE	NE	ND<325	ND<334	ND<328	ND<315
4-Chlorophenyl phenyl ether	NE	NE	ND<325	ND<334	ND<328	ND<315
4-Nitroaniline	NE	NE	ND<651	ND<668	ND<656	ND<630
4-Nitrophenol	NE	NE	ND<651	ND<668	ND<656	ND<630
Acenaphthene	20,000	100,000	ND<325	ND<334	ND<328	ND<315
Acenaphthylene	100,000	100,000	ND<325	ND<334	ND<328	ND<315
Acetophenone	NE	NE	ND<325	ND<334	ND<328	ND<315
Anthracene	100,000	100,000	ND<325	ND<334	ND<328	ND<315
Atrazine	NE	NE	ND<325	ND<334	ND<328	ND<315
Benzaldehyde	NE	NE	ND<325	ND<334	ND<328	ND<315
Benzo[a]anthracene	1,000	1,000	ND<325	ND<334	ND<328	ND<315
Benzo[a]pyrene	1,000	1,000	ND<325	ND<334	ND<328	ND<315
Benzo[b]fluoranthene	1,000	1,000	ND<325	ND<334	ND<328	ND<315
Benzo[g,h,i]perylene	100,000	100,000	ND<325	ND<334	ND<328	ND<315
Benzo[k]fluoranthene	800	3,900	ND<325	ND<334	ND<328	ND<315
Bis(2-chloroethoxy)methane	NE	NE	ND<325	ND<334	ND<328	ND<315
Bis(2-chloroethyl)ether	NE	NE	ND<325	ND<334	ND<328	ND<315
Bis (2-chloroisopropyl) ether	NE	NE	ND<325	ND<334	ND<328	ND<315
Bis(2-ethylhexyl) phthalate	NE	NE	ND<325	ND<334	ND<328	ND<315
Butyl benzyl phthalate	NE	NE	ND<325	ND<334	ND<328	ND<315
Caprolactam	NE	NE	ND<325	ND<334	ND<328	ND<315
Carbazole	NE	NE	ND<325	ND<334	ND<328	ND<315
Chrysene	1,000	3,900	ND<325	ND<334	ND<328	ND<315
Dibenz(a,h)anthracene	330	33,000	ND<325	ND<334	ND<328	ND<315
Dibenzofuran	NE	NE	ND<325	ND<334	ND<328	ND<315
Diethyl phthalate	NE	NE	ND<325	ND<334	ND<328	ND<315
Dimethyl phthalate	NE	NE	ND<651	ND<668	ND<656	ND<630
Di-n-butyl phthalate	NE	NE	ND<325	ND<334	ND<328	ND<315
Di-n-octyl phthalate	NE	NE	ND<325	ND<334	ND<328	ND<315
Fluoranthene	100,000	100,000	ND<325	ND<334	ND<328	ND<315
Fluorene	30,000	100,000	ND<325	ND<334	ND<328	ND<315
Hexachlorobenzene	NE	NE	ND<325	ND<334	ND<328	ND<315
Hexachlorobutadiene	NE	NE	ND<325	ND<334	ND<328	ND<315
Hexachlorocyclopentadiene	NE	NE	ND<325	ND<334	ND<328	ND<315
Hexachloroethane	NE	NE	ND<325	ND<334	ND<328	ND<315
Indeno[1,2,3-cd]pyrene	500	500	ND<325	ND<334	ND<328	ND<315

Table 4. **Semi-Volatile Organics (Acid/Base Neutrals) in Soil Boring Samples;** USEPA Method 8270D & 3550C

collected **March 3, 2014**; 211-235 McGuinness Blvd., Brooklyn, New York 11222

PVE Sheffler File #500008

Chemical Constituent	NYSDEC Limit[1]	NYSDEC Limit[2]	Sample ID GB -1 14-16'	Sample ID GB-2 12-14'	Sample ID GB-3 14-16'	Sample ID B-1 8.5-10'
SVOCs (Acid/Base Neutrals)						
Isophorone	NE	NE	ND<325	ND<334	ND<328	ND<315
Naphthalene	12,000	100,000	ND<325	ND<334	ND<328	ND<315
Nitrobenzene	NE	NE	ND<325	ND<334	ND<328	ND<315
N-Nitrosodi-n-propylamine	NE	NE	ND<325	ND<334	ND<328	ND<315
N-Nitrosodiphenylamine	NE	NE	ND<325	ND<334	ND<328	ND<315
Pentachlorophenol	800	6,700	ND<651	ND<668	ND<656	ND<630
Phenanthrene	100,000	100,000	ND<325	ND<334	ND<328	ND<315
Phenol	330	100,000	ND<325	ND<334	ND<328	ND<315
Pyrene	100,000	100,000	ND<325	ND<334	ND<328	ND<315

Notes:

1 – Standards are for soils according 6NYCRR Part 375, Unrestricted Use Soil Cleanup Objectives;

2 - Standards are for soils according 6NYCRR Part 375, Restricted-Residential Use Soil Cleanup Objectives;

All concentrations are in ug/kg unless otherwise indicated;

Boldface type designates those compounds detected at concentrations exceeding NYSDEC standards;

NE = No standard established.

MDL = Method Detection Limit

ND= Not detected at MDL for sample.

Table 5. **Chlorinated Pesticides & Herbicides** in **Soil Boring Samples;** USEPA Method 8081, 3510C collected **March 3, 2014**; 211-235 McGuinness Blvd., Brooklyn, New York 11222

PVE Sheffler File #500008

Chemical Constituent	NYSDEC Limit[1]	NYSDEC Limit[2]	Sample ID GB -1 14-16'	Sample ID GB-2 12-14'	Sample ID GB-3 14-16'	Sample ID B-1 8.5-10'
Herbicides						
2,4,5-TP (Silvex)	3,800	100,000	ND<5.9	ND<5.9	ND<5.9	ND<5.5
Chlorinated Pesticides						
4,4-DDD	3.3	13,000	ND<3.9	ND<3.9	ND<3.9	ND<3.6
4,4-DDE	3.3	8,900	ND<3.9	ND<3.9	ND<3.9	ND<3.6
4,4-DDT	3.3	7,900	ND<3.9	ND<3.9	ND<3.9	ND<3.6
Aldrin	5	97	ND<2.0	ND<2.0	ND<2.0	ND<1.9
alpha-BHC	20	480	ND<2.0	ND<2.0	ND<2.0	ND<1.9
beta-BHC	36	360	ND<2.0	ND<2.0	ND<2.0	ND<1.9
cis-Chlordane	94	4,200	ND<2.0	ND<2.0	ND<2.0	ND<1.9
delta-BHC	40	100,000	ND<2.0	ND<2.0	ND<2.0	ND<1.9
Dieldrin	5	200	ND<3.9	ND<3.9	ND<3.9	ND<3.6
Endosulfan I	2,400	24,000	ND<2.0	ND<2.0	ND<2.0	ND<1.9
Endosulfan II	2,400	24,000	ND<3.9	ND<3.9	ND<3.9	ND<3.6
Endosulfan Sulfate	2,400	24,000	ND<3.9	ND<3.9	ND<3.9	ND<3.6
Endrin	14	11,000	ND<3.9	ND<3.9	ND<3.9	ND<3.6
Endrin Aldehyde	NE	NE	ND<3.9	ND<3.9	ND<3.9	ND<3.6
Endrin Ketone	NE	NE	ND<3.9	ND<3.9	ND<3.9	ND<3.6
gamma-BHC (Lindane)	100	1,300	ND<2.0	ND<2.0	ND<2.0	ND<1.9
Heptachlor	42	2,100	ND<2.0	ND<2.0	ND<2.0	ND<1.9
Heptachlor Epoxide	NE	NE	ND<2.0	ND<2.0	ND<2.0	ND<1.9
Methoxychlor	NE	NE	ND<20	ND<20	ND<20	ND<19
Toxaphene	NE	NE	ND<200	ND<200	ND<200	ND<190
trans-Chlordane	NE	NE	ND<2.0	ND<2.0	ND<2.0	ND<1.9

Notes:

1 – Standards are for soils according 6NYCRR Part 375, Unrestricted Use Soil Cleanup Objectives;

2 - Standards are for soils according 6NYCRR Part 375, Restricted-Residential Use Soil Cleanup Objectives;

All concentrations are in ug/kg unless otherwise indicated;

Boldface type designates those compounds detected at concentrations exceeding NYSDEC standards;

NE = No standard established.

MDL = Method Detection Limit

ND= Not detected at MDL for sample.

Table 6. **Polychlorinated Biphenyls (PCBs)** in **Soil Boring Samples;** USEPA Method 8082A collected **March 3, 2014**; 211-235 McGuinness Blvd., Brooklyn, New York 11222
PVE Sheffler File #500008

Chemical Constituent	NYSDEC Limit[1]	NYSDEC Limit[2]	Sample ID GB -1 14-16'	Sample ID GB-2 12-14'	Sample ID GB-3 14-16'	Sample ID B-1 8.5-10'
PCBs						
PCB-1016	0.1	1	ND<0.0327	ND<0.0349	ND<0.0354	ND<0.0313
PCB-1221	0.1	1	ND<0.0327	ND<0.0349	ND<0.0354	ND<0.0313
PCB-1232	0.1	1	ND<0.0327	ND<0.0349	ND<0.0354	ND<0.0313
PCB-1242	0.1	1	ND<0.0327	ND<0.0349	ND<0.0354	ND<0.0313
PCB-1248	0.1	1	ND<0.0327	ND<0.0349	ND<0.0354	ND<0.0313
PCB-1254	0.1	1	ND<0.0327	ND<0.0349	ND<0.0354	ND<0.0313
PCB-1260	0.1	1	ND<0.0327	ND<0.0349	ND<0.0354	ND<0.0313
PCB-1262	0.1	1	ND<0.0327	ND<0.0349	ND<0.0354	ND<0.0313
PCB-1268	0.1	1	ND<0.0327	ND<0.0349	ND<0.0354	ND<0.0313

Notes:

1 – Standards are for soils according 6NYCRR Part 375, Unrestricted Use Soil Cleanup Objectives;

2 - Standards are for soils according 6NYCRR Part 375, Restricted-Residential Use Soil Cleanup Objectives;

All concentrations are in mg/kg unless otherwise indicated;

Boldface type designates those compounds detected at concentrations exceeding NYSDEC standards;

NE = No standard established.

MDL = Method Detection Limit

ND= Not detected at MDL for sample.

Table 7. **Part 375 Metals (ICP)** in **Ground Water Samples;** USEPA Method 6010C, 3005 collected **March 12, 2014**; 211-235 McGuinness Blvd., Brooklyn, New York 11222 PVE Sheffler File #500008

Chemical Constituent	NYSDEC Limit*	Sample ID MW-1	Sample ID MW-2	Sample ID MW-3
Metals				
Arsenic	0.025	0.0126	ND<0.0100	0.0153
Barium	1	0.155	ND<0.100	0.118
Beryllium	NE	ND<0.00500	ND<0.00500	ND<0.00500
Cadmium	0.005	ND<0.00500	ND<0.00500	ND<0.00500
Chromium	0.05	ND<0.0100	ND<0.0100	ND<0.0100
Copper	0.2	ND<0.0250	ND<0.0250	ND<0.0250
Lead	0.025	ND<0.0100	ND<0.0100	ND<0.0100
Manganese	0.3	**4.44**	**2.43**	**1.36**
Mercury	0.0007	ND<0.000200	ND<0.000200	ND<0.000200
Nickel	0.1	ND<0.0400	ND<0.0400	ND<0.0400
Selenium	0.01	ND<0.0100	ND<0.0100	ND<0.0100
Silver	0.05	ND<0.0100	ND<0.0100	ND<0.0100
Zinc	NE	ND<0.0600	0.0652	ND<0.0600

Notes:

*Standards are for Class GA groundwater according 6NYCRR Part 700-705.

All concentrations are in mg/L unless otherwise indicated;

Boldface type designates those compounds detected at concentrations exceeding NYSDEC standards;

NE = No standard established.

MDL = Method Detection Limit

ND= Not detected at MDL for sample.

Table 8. **Volatile Organic Compounds (VOCs) in Ground Water Samples;** USEPA Method 8260C & 5030 collected **March 12, 2014**; 211-235 McGuinness Blvd., Brooklyn, New York 11222

PVE Sheffler File #500008

Chemical Constituent	NYSDEC Limit*	Sample ID MW-1	Sample ID MW-2	Sample ID MW-3
VOCs				
1,1,1-Trichloroethane	5	ND<2.00	ND<2.00	ND<2.00
1,1,2,2-Tetrachloroethane	5	ND<2.00	ND<2.00	ND<2.00
1,1,2-Trichloroethane	1	ND<2.00	ND<2.00	ND<2.00
1,1-Dichloroethane	5	ND<2.00	ND<2.00	ND<2.00
1,1-Dichloroethene	5	ND<2.00	ND<2.00	ND<2.00
1,2,3-Trichlorobenzene	5	ND<5.00	ND<5.00	ND<5.00
1,2,4-Trichlorobenzene	5	ND<5.00	ND<5.00	ND<5.00
1,2,4-Trimethylbenzene	5	ND<2.00	ND<2.00	ND<2.00
1,2-Dibromo-3-Chloropropane	0.04	ND<10.0	ND<10.0	ND<10.0
1,2-Dibromoethane	NE	ND<2.00	ND<2.00	ND<2.00
1,2-Dichlorobenzene	3	ND<2.00	ND<2.00	ND<2.00
1,2-Dichloroethane	0.6	ND<2.00	ND<2.00	ND<2.00
1,2-Dichloropropane	1	ND<2.00	ND<2.00	ND<2.00
1,3,5-Trimethylbenzene	5	ND<2.00	ND<2.00	ND<2.00
1,3-Dichlorobenzene	3	ND<2.00	ND<2.00	ND<2.00
1,4-Dichlorobenzene	3	ND<2.00	ND<2.00	ND<2.00
1,4-dioxane	NE	ND<20.0	ND<20.0	ND<20.0
2-Butanone	NE	ND<10.0	ND<10.0	ND<10.0
2- Hexanone	NE	ND<5.00	ND<5.00	ND<5.00
4-Methyl-2-pentanone	NE	ND<5.00	ND<5.00	ND<5.00
Acetone	NE	ND<10.0	ND<10.0	ND<10.0
Benzene	1	ND<0.700	ND<0.700	ND<0.700
Bromochloromethane	5	ND<5.00	ND<5.00	ND<5.00
Bromodichloromethane	5	ND<2.00	ND<2.00	ND<2.00
Bromoform	NE	ND<5.00	ND<5.00	ND<5.00
Bromomethane	NE	ND<2.00	ND<2.00	ND<2.00
Carbon disulfide	60	ND<2.00	ND<2.00	ND<2.00
Carbon tetrachloride	5	ND<2.00	ND<2.00	ND<2.00
Chlorobenzene	5	ND<2.00	ND<2.00	ND<2.00
Chloroethane	5	ND<2.00	ND<2.00	ND<2.00
Chloroform	7	ND<2.00	ND<2.00	ND<2.00
Chloromethane	NE	ND<2.00	ND<2.00	ND<2.00
cis-1,2-Dichloroethene	5	ND<2.00	ND<2.00	ND<2.00
cis-1,3- Dichloropropene	0.4	ND<2.00	ND<2.00	ND<2.00
Cyclohexane	NE	ND<10.0	ND<10.0	ND<10.0
Dibromochloromethane	NE	ND<2.00	ND<2.00	ND<2.00
Dichlorodifluoromethane	5	ND<2.00	ND<2.00	ND<2.00
Ethylbenzene	5	ND<2.00	ND<2.00	ND<2.00
Freon 113	NE	ND<2.00	ND<2.00	ND<2.00

Isopropylbenzene	5	ND<2.00	ND<2.00	ND<2.00
m/p-Xylene	NE	ND<2.00	ND<2.00	ND<2.00
Methyl acetate	NE	ND<2.00	ND<2.00	ND<2.00
Methyl tert-butyl ether	NE	ND<2.00	ND<2.00	ND<2.00
Methylcyclohexane	NE	ND<2.00	ND<2.00	ND<2.00
Methylene chloride	5	ND<5.00	ND<5.00	ND<5.00
Naphthalene	NE	ND<5.00	ND<5.00	ND<5.00
n-Butylbenzene	5	ND<2.00	ND<2.00	ND<2.00
n-propylbenzene	NE	ND<2.00	ND<2.00	ND<2.00
o-Xylene	NE	ND<2.00	ND<2.00	ND<2.00
p-Isopropyltoulene	NE	ND<2.00	ND<2.00	ND<2.00
sec-Butylbenxene	NE	ND<2.00	ND<2.00	ND<2.00
Styrene	5	ND<5.00	ND<5.00	ND<5.00
tert-Butylbenzene	5	ND<2.00	ND<2.00	ND<2.00
Tetrachloroethene	5	ND<2.00	ND<2.00	ND<2.00
Toluene	5	ND<2.00	ND<2.00	ND<2.00
trans-1,2-Dichloroethene	5	ND<2.00	ND<2.00	ND<2.00
trans-1,3- Dichloropropene	NE	ND<2.00	ND<2.00	ND<2.00
Trichloroethene	5	ND<2.00	ND<2.00	ND<2.00
Trichlorofluormethane	5	ND<2.00	ND<2.00	ND<2.00
Vinyl Chloride	2	ND<2.00	ND<2.00	ND<2.00

Notes:

*Standards are for Class GA groundwater according 6NYCRR Part 700-705.

All concentrations are in ug/L unless otherwise indicated;

Boldface type designates those compounds detected at concentrations exceeding NYSDEC standards;

NE = No standard established.

MDL = Method Detection Limit

ND= Not detected at MDL for sample.

Table 9. **Semi-Volatile Organics (Acid/Base Neutrals) in Ground Water Samples;** USEPA Method 8270D & 3510C

collected **March 12, 2014**; 211-235 McGuinness Blvd., Brooklyn, New York 11222

PVE Sheffler File #500008

Chemical Constituent	NYSDEC Limit*	Sample ID MW-1		Sample ID MW-2		Sample ID MW-2	
SVOCs (Acid/Base Neutrals)							
1,1-Biphenyl	5	ND<10.0		ND<10.0		ND<10.0	
1,2,4,5-Tetrachlorobenzene	5	ND<10.0		ND<10.0		ND<10.0	
1,2,4-Trichlorobenzene	5	ND<10.0		ND<10.0		ND<10.0	
1,2-Dichlorobenzene	3	ND<10.0		ND<10.0		ND<10.0	
1,3-Dichlorobenzene	3	ND<10.0		ND<10.0		ND<10.0	
1,4-Dichlorobenzene	3	ND<10.0	L	ND<10.0	L	ND<10.0	L
2,3,4,6-Tetrachlorophenol	NE	ND<10.0		ND<10.0		ND<10.0	
2,4,5-Trichlorophenol	NE	ND<20.0		ND<20.0		ND<20.0	
2,4,6-Trichlorophenol	NE	ND<10.0		ND<10.0		ND<10.0	
2,4-Dichlorophenol	1	ND<10.0		ND<10.0		ND<10.0	
2,4-Dimethylphenol	1	ND<10.0		ND<10.0		ND<10.0	
2,4-Dinitrophenol	1	ND<20.0		ND<20.0		ND<20.0	
2,4-Dinitrotoluene	1	ND<10.0		ND<10.0		ND<10.0	
2,6-Dinitrotoluene	5	ND<10.0		ND<10.0		ND<10.0	
2-Chloronaphthalene	NE	ND<10.0		ND<10.0		ND<10.0	
2-Chlorophenol	1	ND<10.0		ND<10.0		ND<10.0	
2-Methylnaphthalene	NE	ND<10.0		ND<10.0		ND<10.0	
2-Methylphenol	1	ND<10.0		ND<10.0		ND<10.0	
2-Nitroaniline	5	ND<20.0		ND<20.0		ND<20.0	
2-Nitrophenol	1	ND<10.0		ND<10.0		ND<10.0	
3 & 4 Methylphenol	1	ND<10.0		ND<10.0		ND<10.0	
3,3'-Dichlorobenzidine	5	ND<10.0		ND<10.0		ND<10.0	
3-Nitroaniline	5	ND<20.0		ND<20.0		ND<20.0	
4,6-Dinitro-2-methylphenol	NE	ND<20.0		ND<20.0		ND<20.0	
4-Bromophenyl phenyl ether	NE	ND<10.0		ND<10.0		ND<10.0	
4-Chloro-3-methylphenol	NE	ND<10.0		ND<10.0		ND<10.0	
4-Chloroaniline	5	ND<10.0		ND<10.0		ND<10.0	
4-Chlorophenyl phenyl ether	NE	ND<10.0		ND<10.0		ND<10.0	
4-Nitroaniline	5	ND<20.0		ND<20.0		ND<20.0	
4-Nitrophenol	1	ND<20.0		ND<20.0		ND<20.0	
Acenaphthene	NE	ND<10.0		ND<10.0		ND<10.0	
Acenaphthylene	NE	ND<10.0		ND<10.0		ND<10.0	
Acetophenone	NE	ND<10.0		ND<10.0		ND<10.0	
Anthracene	NE	ND<10.0		ND<10.0		ND<10.0	
Atrazine	7.5	ND<10.0		ND<10.0		ND<10.0	
Benzaldehyde	NE	ND<10.0		ND<10.0		ND<10.0	
Benzo[a]anthracene	NE	ND<10.0		ND<10.0		ND<10.0	
Benzo[a]pyrene	NE	ND<10.0		ND<10.0		ND<10.0	
Benzo[b]fluoranthene	NE	ND<10.0		ND<10.0		ND<10.0	
Benzo[g,h,i]perylene	NE	ND<10.0		ND<10.0		ND<10.0	
Benzo[k]fluoranthene	NE	ND<10.0		ND<10.0		ND<10.0	
Bis(2-chloroethoxy)methane	5	ND<10.0		ND<10.0		ND<10.0	
Bis(2-chloroethyl)ether	1	ND<10.0		ND<10.0		ND<10.0	
Bis (2-chloroisopropyl) ether	NE	ND<10.0		ND<10.0		ND<10.0	
Bis(2-ethylhexyl) phthalate	5	ND<10.0		ND<10.0		ND<10.0	
Butyl benzyl phthalate	NE	ND<10.0		ND<10.0		ND<10.0	
Caprolactam	NE	ND<10.0		ND<10.0		ND<10.0	
Carbazole	NE	ND<10.0		ND<10.0		ND<10.0	
Chrysene	NE	ND<10.0		ND<10.0		ND<10.0	
Dibenz(a,h)anthracene	NE	ND<10.0		ND<10.0		ND<10.0	
Dibenzofuran	NE	ND<10.0		ND<10.0		ND<10.0	
Diethyl phthalate	NE	ND<10.0		ND<10.0		ND<10.0	
Dimethyl phthalate	NE	ND<20.0		ND<20.0		ND<20.0	
Di-n-butyl phthalate	NE	ND<10.0		ND<10.0		ND<10.0	
Di-n-octyl phthalate	NE	ND<10.0		ND<10.0		ND<10.0	
Fluoranthene	NE	ND<10.0		ND<10.0		ND<10.0	
Fluorene	NE	ND<10.0		ND<10.0		ND<10.0	

Table 9. **Semi-Volatile Organics (Acid/Base Neutrals) in Ground Water Samples;** USEPA Method 8270D & 3510C

collected **March 12, 2014**; 211-235 McGuinness Blvd., Brooklyn, New York 11222

PVE Sheffler File #500008

Chemical Constituent	NYSDEC Limit*	Sample ID MW-1	Sample ID MW-2	Sample ID MW-2
SVOCs (Acid/Base Neutrals)				
Hexachlorobenzene	0.04	ND<10.0	ND<10.0	ND<10.0
Hexachlorobutadiene	0.5	ND<10.0	ND<10.0	ND<10.0
Hexachlorocyclopentadiene	NE	ND<10.0	ND<10.0	ND<10.0
Hexachloroethane	5	ND<10.0	ND<10.0	ND<10.0
Indeno[1,2,3-cd]pyrene	NE	ND<10.0	ND<10.0	ND<10.0
Isophorone	NE	ND<10.0	ND<10.0	ND<10.0
Naphthalene	NE	ND<10.0	ND<10.0	ND<10.0
Nitrobenzene	NE	ND<10.0	ND<10.0	ND<10.0
N-Nitrosodi-n-propylamine	NE	ND<10.0	ND<10.0	ND<10.0
N-Nitrosodiphenylamine	NE	ND<10.0	ND<10.0	ND<10.0
Pentachlorophenol	1	ND<20.0	ND<20.0	ND<20.0
Phenanthrene	NE	ND<10.0	ND<10.0	ND<10.0
Phenol	1	ND<10.0	ND<10.0	ND<10.0
Pyrene	NE	ND<10.0	ND<10.0	ND<10.0

Notes:

*Standards are for Class GA groundwater according 6NYCRR Part 700-705.

All concentrations are in ug/L unless otherwise indicated;

Boldface type designates those compounds detected at concentrations exceeding NYSDEC standards;

NE = No standard established.

MDL = Method Detection Limit

ND= Not detected at MDL for sample.

L= Laboratory Control Sample recovery outside accepted QC limits

Table 10. **Chlorinated Pesticides** in **Ground Water Samples;** USEPA Method 8081B, 3510C collected **March 12, 2014**; 211-235 McGuinness Blvd., Brooklyn, New York 11222 PVE Sheffler File #500008

Chemical Constituent	NYSDEC	Sample ID MW-1	Sample ID MW-2	Sample ID MW-3
Chlorinated Pesticides				
4,4-DDD	0.3	ND<0.11	ND<0.11	ND<0.11
4,4-DDE	0.2	ND<0.10	ND<0.10	ND<0.11
4,4-DDT	0.2	ND<0.11	ND<0.11	ND<0.12
Aldrin	NE	ND<0.10	ND<0.10	ND<0.10
alpha-BHC	NE	ND<0.10	ND<0.10	ND<0.10
beta-BHC	NE	ND<0.12	ND<0.12	ND<0.13
cis-Chlordane	NE	ND<0.11	ND<0.11	ND<0.12
delta-BHC	NE	ND<0.10	ND<0.10	ND<0.11
Dieldrin	0.004	ND<0.10	ND<0.10	ND<0.11
Endosulfan I	NE	ND<0.12	ND<0.12	ND<0.13
Endosulfan II	NE	ND<0.13	ND<0.13	ND<0.13
Endosulfan Sulfate	NE	ND<0.15	ND<0.15	ND<0.16
Endrin	NE	ND<0.12	ND<0.12	ND<0.12
Endrin Aldehyde	5	ND<0.11	ND<0.12	ND<0.12
Endrin Ketone	5	ND<0.13	ND<0.14	ND<0.14
gamma-BHC (Lindane)	NE	ND<0.11	ND<0.11	ND<0.11
Heptachlor	0.04	ND<0.11	ND<0.11	ND<0.11
Heptachlor Epoxide	0.03	ND<0.10	ND<0.11	ND<0.11
Methoxychlor	35	ND<0.15	ND<0.15	ND<0.16
Toxaphene	0.06	ND<3.3	ND<3.3	ND<3.4
trans-Chlordane	NE	ND<0.10	ND<0.10	ND<0.11

Notes:

*Standards are for Class GA groundwater according 6NYCRR Part 700-705.

All concentrations are in ug/L unless otherwise indicated;

Boldface type designates those compounds detected at concentrations exceeding NYSDEC standards;

NE = No standard established.

MDL = Method Detection Limit

ND= Not detected at MDL for sample.

Table 11. **Polychlorinated Biphenyls (PCBs)** in **Ground Water Samples;** USEPA Method 8082A & 3510C collected **March 12, 2014**; 211-235 McGuinness Blvd., Brooklyn, New York 11222
PVE Sheffler File #500008

Chemical Constituent	NYSDEC Limit*	Sample ID MW-1	Sample ID MW-2	Sample ID MW-3
PCBs				
PCB-1016	0.09	ND<0.100	ND<0.100	ND<0.100
PCB-1221	0.09	ND<0.100	ND<0.100	ND<0.100
PCB-1232	0.09	ND<0.100	ND<0.100	ND<0.100
PCB-1242	0.09	ND<0.100	ND<0.100	ND<0.100
PCB-1248	0.09	ND<0.100	ND<0.100	ND<0.100
PCB-1254	0.09	ND<0.100	ND<0.100	ND<0.100
PCB-1260	0.09	ND<0.100	ND<0.100	ND<0.100
PCB-1262	0.09	ND<0.100	ND<0.100	ND<0.100
PCB-1268	0.09	ND<0.100	ND<0.100	ND<0.100

Notes:

*Standards are for Class GA groundwater according 6NYCRR Part 700-705.

All concentrations are in ug/L unless otherwise indicated;

Boldface type designates those compounds detected at concentrations exceeding NYSDEC standards;

NE = No standard established.

MDL = Method Detection Limit

ND= Not detected at MDL for sample.

TABLE 12
SUMMARY OF SOIL ANALYTICAL DATA
209, 211-235 MCGUINNESS BOULEVARD
BROOKLYN, NEW YORK

Compounds	Regulatory Criteria		Sample Location										
TCL VOCs (ug/kg)	**NYSDEC Part 375 RUSCO**	**NYSDEC Part 375 UUSCO**	**VHB SB-1 (0-2')**	**VHB SB-1 (8-10')**	**VHB SB-1 (14-16')**	**VHB SB-2 (0-2')**	**VHB SB-2 (14-16')**	**VHB SB-3 (0-2')**	**VHB SB-3 (14-16')**	**VHB SB-4 (0-2')**	**VHB SB-4 (14-16')**	**VHB SB-5 (0-2')**	**VHB SB-5 (14-16')**
1,2,3-Trichlorobenzene	NA	NA	ND	ND	ND	ND	ND	ND	ND	ND	ND	ND	ND
1,2,4-Trichlorobenzene	NA	20,000*	ND	ND	ND	ND	ND	ND	ND	ND	ND	ND	ND
1,2,4,5-Tetramethylbenzene	NA	NA	ND	5,800	2.6 J	ND	ND	ND	ND	ND	ND	ND	ND
1,2,4-Trimethylbenzene	47,000	3,600	ND	ND	ND	ND	ND	ND	ND	ND	ND	ND	ND
1,3,5-Trimethylbenzene	47,000	8,400	ND	ND	ND	ND	ND	ND	ND	ND	ND	ND	ND
1,1,2-Trichloroethane	NA	NA	ND	ND	ND	ND	ND	ND	ND	ND	ND	ND	ND
1,1,1-Trichloroethane	100,000	680	ND	ND	ND	ND	ND	ND	ND	ND	ND	ND	ND
1,2,3-Trichloropropane	NA	20,000*	ND	ND	ND	ND	ND	ND	ND	ND	ND	ND	ND
1,1,1,2-Tetrachloroethane	NA	NA	ND	ND	ND	ND	ND	ND	ND	ND	ND	ND	ND
1,1,2,2-Tetrachloroethane	NA	600*	ND	ND	ND	ND	ND	ND	ND	ND	ND	ND	ND
1,2-Dibromo-3-chloropropane	NA	NA	ND	ND	ND	ND	ND	ND	ND	ND	ND	ND	ND
1,2-Dibromoethane	NA	NA	ND	ND	ND	ND	ND	ND	ND	ND	ND	ND	ND
1,2-Dichlorobenzene	NA	NA	ND	ND	ND	ND	ND	ND	ND	ND	ND	ND	ND
1,3-Dichlorobenzene	17,000	2,400	ND	ND	ND	ND	ND	ND	ND	ND	ND	ND	ND
1,1-Dichloroethene	100,000	330	ND	ND	ND	ND	ND	ND	ND	ND	ND	ND	ND
1,2-Dichloroethene, Total	NA	NA	ND	ND	ND	ND	ND	ND	ND	ND	ND	ND	ND
1,2-Dichloroethane	2,300	20	ND	ND**	ND	ND	ND	ND	ND	ND	ND	ND	ND
1,4-Dichlorobenzene	9,800	1,800	ND	ND	0.26 J	ND	0.19 J	ND	ND	ND	ND	ND	ND
1,2-Dichloropropane	NA	700,000*	ND	ND	ND	ND	ND	ND	ND	ND	ND	ND	ND
1,3-Dichloropropane	NA	300*	ND	ND	ND	ND	ND	ND	ND	ND	ND	ND	ND
2,2-Dichloropropane	NA	NA	ND	ND	ND	ND	ND	ND	ND	ND	ND	ND	ND
1,1-Dichloropropene	NA	NA	ND	ND	ND	ND	ND	ND	ND	ND	ND	ND	ND
1,3-Dichloropropene, Total	NA	NA	ND	ND	ND	ND	ND	ND	ND	ND	ND	ND	ND
1,4-Diethylbenzene	NA	NA	ND	2,700 J	1.2 J	ND	ND	ND	ND	ND	ND	ND	ND
2-Butanone (Methyl Ethyl Ketone)	100,000	120	ND	ND**	2.5 J	ND	2.2 J	ND	ND	ND	ND	ND	3.2 J
2-Hexanone	NA	NA	ND	ND	ND	ND	ND	ND	ND	ND	ND	ND	ND
Acetone	100,000	50	ND	ND**	33	ND**	26	ND**	ND**	ND	36	47	41
Acrylonitrile	NA	NA	ND	ND	ND	ND	ND	ND	ND	ND	ND	ND	ND
Benzene	2,900	60	1.2 J	ND**	ND	ND	ND	ND	ND	ND	ND	ND	ND
Bromobenzene	NA	NA	ND	ND	ND	ND	ND	ND	ND	ND	ND	ND	ND
Bromochloromethane	NA	NA	ND	ND	ND	ND	ND	ND	ND	ND	ND	ND	ND
Bromodichloromethane	NA	10,000*	ND	ND	ND	ND	ND	ND	ND	ND	ND	ND	ND
Bromoform	NA	NA	ND	ND	ND	ND	ND	ND	ND	ND	ND	ND	ND
Carbon disulfide	NA	2,700*	ND	ND	ND	ND	ND	ND	ND	ND	ND	ND	ND
Carbon Tetrachloride	1,400	760	ND	ND	ND	ND	ND	ND	ND	ND	ND	ND	ND
Chloroform	10,000	370	ND	ND**	ND	ND	ND	ND	ND	ND	ND	ND	ND
Chlorobenzene	100,000	1,100	ND	ND	ND	ND	ND	ND	ND	ND	ND	ND	ND
Chloroethane	NA	1,900*	ND	ND	ND	ND	ND	ND	ND	ND	ND	ND	ND
Chloromethane	NA	NA	ND	ND	ND	ND	ND	ND	ND	ND	ND	ND	ND
o-Chlorotoluene	NA	NA	ND	ND	ND	ND	ND	ND	ND	ND	ND	ND	ND
p-Chlorotoluene	NA	NA	ND	ND	ND	ND	ND	ND	ND	ND	ND	ND	ND
cis-1,3-Dichloropropene	NA	NA	ND	ND	ND	ND	ND	ND	ND	ND	ND	ND	ND
cis-1,2-Dichloroethene	59,000	250	ND	ND	ND	ND	ND	ND	ND	ND	ND	ND	ND
Dibromochloromethane	NA	NA	ND	ND	ND	ND	ND	ND	ND	ND	ND	ND	ND
Dibromomethane	NA	NA	ND	ND	ND	ND	ND	ND	ND	ND	ND	ND	ND
Dichlorodifluoromethane	NA	NA	ND	ND	ND	ND	ND	ND	ND	ND	ND	ND	ND
1,4-Dioxane	9,800	100	ND	ND**	ND	ND**	ND	ND**	ND**	ND	ND	ND	ND
Isopropylbenzene	NA	2,300*	ND	**2,600**	0.83 J	ND	ND	ND	ND	ND	ND	ND	ND
p-Isopropyltoluene	NA	10,000*	ND	ND	ND	ND	ND	ND	ND	ND	ND	ND	ND
o-Xylene	NA	NA	ND	ND	ND	ND	ND	ND	ND	ND	ND	ND	ND
p- & m- xylenes	NA	NA	0.53 J	ND**	ND	ND	ND	ND	ND	ND	ND	ND	ND
Tetrachloroethene (PCE)	5,500	1,300	1.1 J	ND	ND	ND	ND	ND	ND	ND	ND	0.43 J	ND
Xylenes, Total	100,000	260	0.53 J	ND**	ND	ND	ND	ND	ND	ND	ND	ND	ND
Bromomethane	NA	NA	ND	ND	ND	ND	ND	ND	ND	ND	2.5 J	ND	ND
Ethylbenzene	30,000	1,000	ND	ND	ND	ND	ND	ND	ND	ND	ND	ND	ND
Ethyl ether	NA	NA	ND	ND	ND	ND	ND	ND	ND	ND	ND	ND	ND
4-Ethyltoluene	NA	NA	ND	ND	ND	ND	ND	ND	ND	ND	ND	ND	ND
Hexachlorobutadiene	NA	NA	ND	ND	ND	ND	ND	ND	ND	ND	ND	ND	ND
4-Methyl-2-pentanone	NA	1,000*	ND	ND	ND	ND	ND	ND	ND	ND	ND	ND	ND
Methylene Chloride	51,000	50	ND	ND**	ND	ND**	ND	ND**	ND**	ND	ND	ND	ND
Methyl Tert Butyl Ether (MTBE)	62,000	930	ND	ND	ND	ND	ND	ND	ND	ND	ND	ND	ND
Napthalene	12,000	12,000	0.59 J	ND	0.32 J	820	ND	2,600	2,200	0.43 J	ND	0.34 J	ND
n-Butylbenzene	NA	12,000	ND	2,900	1.1	ND	ND	ND	ND	ND	ND	ND	ND
n-Propylbenzene	100,000	3,900	ND	2,600	0.84 J	ND	ND	ND	ND	ND	ND	ND	ND
sec-Butylbenzene	100,000	11,000	ND	2,300	0.98 J	ND	ND	ND	ND	ND	ND	ND	ND
Styrene	NA	300,000*	ND	ND	ND	ND	ND	ND	ND	ND	ND	ND	ND
tert-Butylbenzene	100,000	5,900	ND	ND	ND	ND	0.31 J	ND	ND	ND	ND	ND	ND
trans-1,2-Dichloroethene	100,000	190	ND	ND**	ND	ND	ND	ND	ND	ND	ND	ND	ND
trans-1,3-Dichloropropene	NA	NA	ND	ND	ND	ND	ND	ND	ND	ND	ND	ND	ND
trans-1,4-Dichloro-2-butene	NA	NA	ND	ND	ND	ND	ND	ND	ND	ND	ND	ND	ND
Toluene	100,000	700	0.63 J	ND	0.29 J	ND	ND	ND	ND	0.40 J	ND	ND	5.3
Trichlorofluoromethane	NA	NA	ND	ND	ND	ND	ND	ND	ND	ND	ND	ND	ND
Trichloroethene	10,000	470	ND	ND	ND	ND	ND	ND	ND	ND	ND	ND	ND
Vinyl Acetate	NA	NA	ND	ND	ND	ND	ND	ND	ND	ND	ND	ND	ND
Vinyl chloride	210	20	ND	ND**	ND	ND	ND	ND	ND	ND	ND	ND	ND

Notes:
TCL VOCs -Target Compound List for volatile organic compounds.
TCL SVOCs - Target Compound List for semi-volatile organic compounds.
TAL Metals - Target Analyte List for metals.
PCBs - Polychlorinated Biphenyls
NYSDEC Part 375 UUSCO - New York State Department of Environmental Conservation Unrestricted Use Soil Clean-up Objectives, as outlined in Table 375-6.8(a), December 14, 2006.
NYSDEC Part 375 RUSCO - New York State Department of Environmental Conservation Restricted Use Soil Clean-up Objectives, as outlined in Table 375-6.8(b), December 14, 2006.
ug/kg - micrograms per kilogram (parts per billion).
mg/kg- milligrams per kilogram (parts per million).
E - Concentration of analyte exceeds the range of the calibration curve and/or linear range of the instrument.
J - estimated concentration.
NA - Not analyzed/Not available
ND - Analyte was not detected above method detection limits.
*Analyte not listed in NYSDEC Part 375 UUSCO. NYSDEC Commisioner Policy (CP)-51 Soil Cleanup Guidance, October 21, 2010 used.
** Although compound is listed as ND, the Method Detection Limit (MDL) exceeds its respective NYSDEC Part 375 UUSCO.
Bolded and peach highlighted values indicate that analyte was detected at a concentration that exceeded its respective NYSDEC Part 375 UUSCO.
Bolded and yellow highlighted values indicate that analyte was detected at a concentration the exceeded its respective NYSDEC PART 375 RUSCO.

TABLE 12
SUMMARY OF SOIL ANALYTICAL DATA
209, 211-235 MCGUINNESS BOULEVARD
BROOKLYN, NEW YORK

Compounds	Regulatory Criteria		Sample Location										
TCL SVOCs (ug/kg)	**NYSDEC Part 375 RUSCO**	**NYSDEC Part 375 UUSCO**	**VHB SB-1 (0-2')**	**VHB SB-1 (8-10')**	**VHB SB-1 (14-16')**	**VHB SB-2 (0-2')**	**VHB SB-2 (14-16')**	**VHB SB-3 (0-2')**	**VHB SB-3 (14-16')**	**VHB SB-4 (0-2')**	**VHB SB-4 (14-16')**	**VHB SB-5 (0-2')**	**VHB SB-5 (14-16')**
4-Bromophenyl phenyl ether	NA	NA	ND	ND	ND	ND	ND	ND	ND	ND	ND	ND	ND
Bis(2-chloroisopropyl)ether	NA	NA	ND	ND	ND	ND	ND	ND	ND	ND	ND	ND	ND
Bis(2-chloroethoxy)methane	NA	NA	ND	ND	ND	ND	ND	ND	ND	ND	ND	ND	ND
1,2-Dichlorobenzene	100,000	1,100	ND	ND	ND	ND	ND	ND	ND	ND	ND	ND	ND
1,3-Dichlorobenzene	17,000	2,400	ND	ND	ND	ND	ND	ND	ND	ND	ND	ND	ND
1,4-Dichlorobenzene	9,800	1,800	ND	ND	ND	ND	ND	ND	ND	ND	ND	ND	ND
3,3'-Dichlorobenzidine	NA	NA	ND	ND	ND	ND	ND	ND	ND	ND	ND	ND	ND
2,4-Dichlorophenol	NA	400*	ND	ND	ND	ND	ND	ND	ND	ND	ND	ND	ND
2,4-Dimethylphenol	NA	NA	ND	ND	ND	ND	ND	ND	ND	ND	ND	ND	ND
2-4-Dinitrophenol	NA	200*	ND	ND	ND	ND	ND	ND	ND	ND	ND	ND	ND
2,4-Dinitrotoluene	NA	NA	ND	ND	ND	ND	ND	ND	ND	ND	ND	ND	ND
2,6-Dinitrotoluene	NA	1,000*	ND	ND	ND	ND	ND	ND	ND	ND	ND	ND	ND
4,6-Dinitro-o-cresol	NA	NA	ND	ND	ND	ND	ND	ND	ND	ND	ND	ND	ND
1,2,4-Trichlorobenzene	NA	3,400*	ND	ND	ND	ND	ND	ND	ND	ND	ND	ND	ND
2,4,6-Trichlorophenol	NA	10,000*	ND	ND	ND	ND	ND	ND	ND	ND	ND	ND	ND
2-Chloronaphthalene	NA	NA	ND	ND	ND	ND	ND	ND	ND	ND	ND	ND	ND
4-Chloroaniline	NA	2,200*	ND	ND	ND	ND	ND	ND	ND	ND	ND	ND	ND
4-Chlorophenyl phenyl ether	NA	NA	ND	ND	ND	ND	ND	ND	ND	ND	ND	ND	ND
1,2,4,5-Tetrachlorobenzene	NA	NA	ND	ND	ND	ND	ND	ND	ND	ND	ND	ND	ND
2,4,5-Trichlorophenol	NA	100*	ND	ND	ND	ND	ND	ND	ND	ND	ND	ND	ND
Acenaphthene	100,000	20,000	230	ND	ND	730	ND	16,000	5,500	ND	ND	ND	ND
Acenaphthylene	100,000	100,000	160	ND	ND	140 J	ND	2,900	1,400	ND	ND	52 J	ND
Acetophenone	NA	NA	ND	ND	ND	ND	ND	ND	ND	ND	ND	ND	ND
Anthracene	100,000	100,000	540	ND	ND	1,400	ND	34,000	11,000	50 J	ND	67 J	ND
Benzo(a)anthracene	1,000	1,000	**1,300**	ND	ND	**2,900**	ND	**59,000**	**20,000**	200	ND	390	100 J
Benzo(a)pyrene	1,000	1,000	**1,100**	ND	ND	**2,700**	ND	**47,000**	**16,000**	190	ND	360	84 J
Benzo(b)fluoranthene	1,000	1,000	**1,400**	ND	ND	**3,600**	ND	**48,000**	**15,000**	240	ND	420	110 J
Benzo(g,h,i)perylene	100,000	100,000	650	ND	ND	1,200	ND	26,000	9,100	110 J	ND	180	ND
Benzo(k)fluoranthene	1,000	800	580	ND	ND	**1,100**	ND	**23,000**	**14,000**	95 J	ND	180	ND
Bis(2-ethylhexyl)phthalate	NA	435,000*	ND	ND	ND	ND	ND	ND	ND	ND	ND	ND	ND
Bis(2-chloroethyl)ether	NA	NA	ND	ND	ND	ND	ND	ND	ND	ND	ND	ND	ND
Dibenzo(a,h)anthracene	NA	330	160	ND	ND	**400**	ND	**13,000**	**3,900**	ND	ND	61 J	ND
3-Methylphenol/4-Methylphenol	NA	NA	ND	ND	ND	ND	ND	480 J	200 J	ND	ND	ND	220 J
Bezoic Acid	NA	2,700*	ND	ND	ND	ND	ND	ND	ND	ND	ND	ND	ND
Benzyl Alcohol	NA	NA	ND	ND	ND	ND	ND	ND	ND	ND	ND	77 J	ND
Biphenyl	NA	NA	200 J	ND	ND	ND	ND	1,600 J	ND	ND	ND	ND	ND
Butyl benzyl phthalate	NA	122,000*	ND	ND	ND	96 J	ND	ND	ND	ND	ND	2,900	ND
Carbazole	NA	NA	320	ND	ND	640	ND	24,000	7,600	ND	ND	ND	ND
2-Chlorophenol	NA	800*	ND	ND	ND	ND	ND	ND	ND	ND	ND	ND	ND
Chrysene	1,000	1,000	**1,500**	ND	ND	**3,200**	ND	**59,000**	**20,000**	220	ND	330	100 J
Dibenzofuran	NA	NA	260	ND	ND	410	ND	14,000	4,500	ND	ND	ND	ND
Di-n-butylphthalate	NA	14*	ND	ND	ND	ND	ND	ND	ND	ND	ND	ND	ND
Di-n-octylphthalate	NA	NA	ND	ND	ND	ND	ND	ND	ND	ND	ND	ND	ND
Diethyl phthalate	NA	7,100*	ND	ND	ND	ND	ND	ND	ND	ND	ND	ND	ND
Dimethyl phthalate	NA	2,700*	ND	ND	ND	ND	ND	ND	ND	ND	ND	ND	ND
Fluoranthene	100,000	100,000	3,300	ND	ND	7,400 E	ND	**150,000**	48,000	390	ND	580	110 J
Fluorene	100,000	30,000	290	ND	ND	540	ND	20,000	6,000	ND	ND	ND	ND
Hexachlorobenzene	330	330	ND	ND	ND	ND	ND	ND	ND	ND	ND	ND	ND
Hexachlorobutadiene	NA	NA	ND	ND	ND	ND	ND	ND	ND	ND	ND	ND	ND
Hexachlorocyclopentadiene	NA	10,000*	ND	ND	ND	ND	ND	ND	ND	ND	ND	ND	ND
Hexachloroethane	NA	NA	ND	ND	ND	ND	ND	ND	ND	ND	ND	ND	ND
Isophorone	NA	4,400*	ND	ND	ND	ND	ND	ND	ND	ND	ND	ND	ND
2-Methylnaphthalene	NA	36,400*	560	ND	ND	320	ND	6,200	2,000	ND	ND	ND	ND
2-Methylphenol	NA	NA	ND	ND	ND	ND	ND	ND	ND	ND	ND	ND	ND
3-Methylphenol/4-Methylphenol	NA	NA	ND	ND	ND	ND	ND	ND	ND	ND	ND	ND	ND
Naphthalene	100,000	12,000	440	ND	ND	690	ND	**16,000**	4,300	ND	ND	ND	ND
2-Nitroaniline	NA	400*	ND	ND	ND	ND	ND	ND	ND	ND	ND	ND	ND
3-Nitroaniline	NA	500*	ND	ND	ND	ND	ND	ND	ND	ND	ND	ND	ND
4-Nitroaniline	NA	NA	ND	ND	ND	ND	ND	ND	ND	ND	ND	ND	ND
Nitrobenzene	NA	170*	ND	ND	ND	ND	ND	ND	ND	ND	ND	ND	ND
n-Nitrosodi-n-propylamine	NA	NA	ND	ND	ND	ND	ND	ND	ND	ND	ND	ND	ND
NitrosoDiPhenylAmine(NDPA)/NPA	NA	NA	ND	ND	ND	ND	ND	ND	ND	ND	ND	ND	ND
2-Nitrophenol	NA	300*	ND	ND	ND	ND	ND	ND	ND	ND	ND	ND	ND
4-Nitrophenol	NA	100*	ND	ND	ND	ND	ND	ND	ND	ND	ND	ND	ND
P-Chloro-M-Cresol	NA	NA	ND	ND	ND	ND	ND	ND	ND	ND	ND	ND	ND
Pentachlorophenol	2,400	800	ND	ND	ND	ND	ND	ND	ND	ND	ND	ND	ND
Phenanthrene	100,000	100,000	3,600	ND	ND	6,400	ND	**150,000**	46,000	270	ND	260	55 J
Phenol	100,000	330	ND	ND	ND	ND	ND	ND	ND	ND	ND	ND	ND
Indeno(1,2,3-cd)Pyrene	500	500	**590**	ND	ND	**1,100**	ND	**29,000**	**9,800**	97 J	ND	270	ND
Pyrene	100,000	100,000	2,800	ND	ND	6,400	ND	**110,000**	38,000	350	ND	530	97 J

Notes:
TCL VOCs -Target Compound List for volatile organic compounds.
TCL SVOCs - Target Compound List for semi-volatile organic compounds.
TAL Metals - Target Analyte List for metals.
PCBs - Polychlorinated Biphenyls
NYSDEC Part 375 UUSCO - New York State Department of Environmental Conservation Unrestricted Use Soil Clean-up Objectives, as outlined in Table 375-6.8(a), December 14, 2006.
NYSDEC Part 375 RUSCO - New York State Department of Environmental Conservation Restricted Use Soil Clean-up Objectives, as outlined in Table 375-6.8(b), December 14, 2006.
ug/kg - micrograms per kilogram (parts per billion).
mg/kg- milligrams per kilogram (parts per million).
E - Concentration of analyte exceeds the range of the calibration curve and/or linear range of the instrument.
J - estimated concentration.
NA - Not analyzed/Not available
ND - Analyte was not detected above method detection limits.
*Analyte not listed in NYSDEC Part 375 UUSCO. NYSDEC Commisioner Policy (CP)-51 Soil Cleanup Guidance, October 21, 2010 used.
** Although compound is listed as ND, the Method Detection Limit (MDL) exceeds its respective NYSDEC Part 375 UUSCO.
Bolded and peach highlighted values indicate that analyte was detected at a concentration that exceeded its respective NYSDEC Part 375 UUSCO.
Bolded and yellow highlighted values indicate that analyte was detected at a concentration the exceeded its respective NYSDEC PART 375 RUSCO.

TABLE 12
SUMMARY OF SOIL ANALYTICAL DATA
209, 211-235 MCGUINNESS BOULEVARD
BROOKLYN, NEW YORK

Compounds	Regulatory Criteria		Sample Location										
Pesticides (ug/kg)	**NYSDEC Part 375 RUSCO**	**NYSDEC Part 375 UUSCO**	**VHB SB-1 (0-2')**	**VHB SB-1 (8-10')**	**VHB SB-1 (14-16')**	**VHB SB-2 (0-2')**	**VHB SB-2 (14-16')**	**VHB SB-3 (0-2')**	**VHB SB-3 (14-16')**	**VHB SB-4 (0-2')**	**VHB SB-4 (14-16')**	**VHB SB-5 (0-2')**	**VHB SB-5 (14-16')**
Delta-BHC	100,000	40	ND	ND	ND	ND	ND	ND	ND	ND	ND	ND	ND
Lindane	280	100	ND	ND	ND	ND	ND	ND	ND	ND	ND	ND	ND
Alpha-BHC	97	20	ND	ND	ND	ND	ND	ND	ND	ND	ND	ND	ND
Beta-BHC	72	36	ND	ND	ND	ND	ND	ND	ND	ND	ND	ND	ND
Heptachlor	420	42	ND	ND	ND	ND	ND	ND	ND	ND	ND	ND	ND
Aldrin	19	5	ND	ND	ND	ND	ND	ND	ND	ND	ND	ND	ND
Heptachlor Epoxide	NA	20*	ND	ND	ND	ND	ND	ND	ND	ND	ND	ND	ND
Endrin	2,200	14	ND	ND	ND	ND	ND	ND	ND	ND	ND	ND	ND
Endrin ketone	NA	NA	ND	ND	ND	ND	ND	ND	ND	ND	ND	ND	ND
Dieldrin	39	5	ND	ND	ND	ND	ND	ND	ND	ND	ND	ND	ND
4,4'-DDD	2,600	3.3	ND	ND	ND	ND	ND	ND	ND	ND	ND	ND	ND
4,4'-DDE	1,800	3.3	ND	ND	ND	ND	ND	ND	ND	ND	ND	**13.8**	ND
4,4'-DDT	1,700	3.3	ND	ND	ND	ND	ND	ND	ND	3.05 J	ND	ND	ND
Endosulfan I	4,800	2,400	ND	ND	ND	ND	ND	ND	ND	ND	ND	ND	ND
Endosulfan II	4,800	2,400	ND	ND	ND	ND	ND	ND	ND	ND	ND	ND	ND
Endosulfan sulfate	4,800	2,400	ND	ND	ND	ND	ND	ND	ND	ND	ND	ND	ND
Methoxychlor	NA	1,200*	ND	ND	ND	ND	ND	ND	ND	ND	ND	ND	ND
Toxaphene	NA	NA	ND	ND	ND	ND	ND	ND	ND	ND	ND	ND	ND
cis-Chlordane	NA	NA	ND	ND	ND	ND	ND	ND	ND	ND	ND	ND	ND
trans-Chlordane	NA	NA	ND	ND	ND	ND	ND	ND	ND	ND	ND	ND	ND
Chlordane	910	94	ND	ND	ND	ND	ND	ND	ND	ND	ND	ND	ND
PCBs (mg/kg)	**NYSDEC Part 375 RUSCO**	**NYSDEC Part 375 UUSCO**	**VHB SB-1 (0-2')**	**VHB SB-1 (8-10')**	**VHB SB-1 (14-16')**	**VHB SB-2 (0-2')**	**VHB SB-2 (14-16')**	**VHB SB-3 (0-2')**	**VHB SB-3 (14-16')**	**VHB SB-4 (0-2')**	**VHB SB-4 (14-16')**	**VHB SB-5 (0-2')**	**VHB SB-5 (14-16')**
Aroclor 1016	NA	NA	ND	ND	ND	ND	ND	ND	ND	ND	ND	ND	ND
Aroclor 1221	NA	NA	ND	ND	ND	ND	ND	ND	ND	ND	ND	ND	ND
Aroclor 1232	NA	NA	ND	ND	ND	ND	ND	ND	ND	ND	ND	ND	ND
Aroclor 1242	NA	NA	ND	ND	ND	ND	ND	ND	ND	ND	ND	ND	ND
Aroclor 1248	NA	NA	ND	ND	ND	ND	ND	ND	ND	ND	ND	ND	ND
Aroclor 1254	NA	NA	ND	ND	ND	ND	ND	ND	ND	ND	ND	ND	ND
Aroclor 1260	NA	NA	ND	ND	ND	ND	ND	0.0376 J	0.0304 J	ND	ND	ND	ND
Aroclor 1262	NA	NA	ND	ND	ND	ND	ND	ND	ND	ND	ND	ND	ND
Aroclor 1268	NA	NA	ND	ND	ND	ND	ND	0.0166 J	ND	ND	ND	ND	ND
PCBs, Total	1.0	0.1	ND	ND	ND	ND	ND	0.0542 J	0.0304 J	ND	ND	ND	ND
TAL Metals (mg/kg)	**NYSDEC Part 375 RUSCO**	**NYSDEC Part 375 UUSCO**	**VHB SB-1 (0-2')**	**VHB SB-1 (8-10')**	**VHB SB-1 (14-16')**	**VHB SB-2 (0-2')**	**VHB SB-2 (14-16')**	**VHB SB-3 (0-2')**	**VHB SB-3 (14-16')**	**VHB SB-4 (0-2')**	**VHB SB-4 (14-16')**	**VHB SB-5 (0-2')**	**VHB SB-5 (14-16')**
Aluminum	NA	10,000*	1,700	6,300	9,200	2,700	**11,000**	5,800	2,900	7,500	4,800	6,900	1,600
Antimony	NA	12*	2.6 J	3.2 J	ND	3.6 J	ND	9.9	4.3 J	1.6 J	ND	1.5 J	0.94 J
Arsenic	16	13	12	8.0	6.8	3.7	7.1	**35**	13	6.9	4.8	9.2	2.2
Barium	350	350	57	49	22	47	17	330	120	180	17	66	14
Beryllium	14	7.2	0.15 J	0.35 J	0.34 J	0.42 J	0.32 J	0.60	0.22 J	0.37 J	0.22 J	0.26 J	0.23 J
Cadmium	2.5	2.5	1.3	ND	ND	ND	ND	**2.8**	1.1	ND	ND	ND	0.08 J
Calcium	NA	10,000*	1,600	3,900	1,300	**21,000**	1,400	**18,000**	8,000	1,500	220	**59,000**	1,200
Chromium	36	30	8.9	10	17	9.6	16	23	12	14	8.0	11	3.4
Cobalt	NA	20*	3.7	7.1	7.8	4.6	6.7	6.9	3.4	7.3	5.0	6.2	2.3
Copper	270	50	**980**	20	9.8	38	14	**340**	**87**	30	7.1	40	31
Iron	NA	NA	11,000	18,000	22,000	7,400	24,000	26,000	16,000	150,000	120,000	12,000	3,600
Lead	400	63	**530**	**160**	5.8	**150**	8.2	**680**	**360**	**280**	3.7 J	54	34
Magnesium	NA	NA	490	1,400	2,100	560	2,800	2,900	1,600	1,500	1,600	4,600	240
Manganese	2,000	1,600	76	290	150	46	430	270	140	320	120	360	25
Mercury	0.81	0.18	**0.39**	**0.22**	ND	**1.9**	ND	**0.77**	**0.48**	**0.38**	ND	**0.26**	0.04 J
Nickel	140	30	5.9	16	9.7	9.0	13	21	11	10	9.2	8.2	4.7
Potassium	NA	NA	350	450	720	490	530	930	420	520	430	1,200	190 J
Selenium	36	3.9	1.4 J	1.2 J	ND	0.32 J	ND	2.3	0.59 J	ND	ND	0.30 J	ND
Silver	36	2	ND	ND	ND	ND	ND	0.58 J	0.18 J	ND	ND	0.22 J	ND
Sodium	NA	NA	120 J	87 J	59 J	200	76 J	460	190	67 J	ND	410	90 J
Thallium	NA	5,000*	ND	ND	ND	ND	ND	ND	ND	ND	ND	ND	ND
Vanadium	NA	39*	13	21	20	16	19	**40**	15	18	11	17	6.1
Zinc	2,200	109	**1,000**	88	37	91	38	**580**	**340**	**140**	23	58	41

Notes:
TCL VOCs -Target Compound List for volatile organic compounds.
TCL SVOCs - Target Compound List for semi-volatile organic compounds.
TAL Metals - Target Analyte List for metals.
PCBs - Polychlorinated Biphenyls
NYSDEC Part 375 UUSCO - New York State Department of Environmental Conservation Unrestricted Use Soil Clean-up Objectives, as outlined in Table 375-6.8(a), December 14, 2006.
NYSDEC Part 375 RUSCO - New York State Department of Environmental Conservation Restricted Use Soil Clean-up Objectives, as outlined in Table 375-6.8(b), December 14, 2006.
ug/kg - micrograms per kilogram (parts per billion).
mg/kg- milligrams per kilogram (parts per million).
E - Concentration of analyte exceeds the range of the calibration curve and/or linear range of the instrument.
J - estimated concentration.
NA - Not analyzed/Not available
ND - Analyte was not detected above method detection limits.
*Analyte not listed in NYSDEC Part 375 UUSCO. NYSDEC Commisioner Policy (CP)-51 Soil Cleanup Guidance, October 21, 2010 used.
** Although compound is listed as ND, the Method Detection Limit (MDL) exceeds its respective NYSDEC Part 375 UUSCO.
Bolded and peach highlighted values indicate that analyte was detected at a concentration that exceeded its respective NYSDEC Part 375 UUSCO.
Bolded and yellow highlighted values indicate that analyte was detected at a concentration the exceeded its respective NYSDEC PART 375 RUSCO.

TABLE 13
SUMMARY OF GROUNDWATER ANALYTICAL DATA
209, 211-235 MCGUINNESS BOULEVARD
BROOKLYN, NEW YORK

Compounds	Regulatory Criteria	Sample Locations
TCL VOCs (ug/L)	**NYSDEC TOGS AWQSGV**	**VHB GW-1**
1,2,3-Trichlorobenzene	5	ND
1,2,4-Trichlorobenzene	5	ND
1,2,4,5-Tetramethylbenzene	NA	ND
1,2,4-Trimethylbenzene	5	ND
1,3,5-Trimethylbenzene	5	ND
1,1,2-Trichloroethane	1	ND
1,1,1-Trichloroethane	5	ND
1,2,3-Trichloropropane	0.04	ND
1,1,1,2-Tetrachloroethane	5	ND
1,1,2,2-Tetrachloroethane	5	ND
1,2-Dibromo-3-chloropropane	0.04	ND
1,2-Dibromoethane	NA	ND
1,2-Dichlorobenzene	3	ND
1,3-Dichlorobenzene	3	ND
1,4-Dichlorobenzene	3	ND
1,1-Dichloroethene	5	ND
1,2-Dichloroethene, Total	5	ND
1,2-Dichloroethane	0.06	ND
1,4-Dichlorobenzene	NA	ND
1,2-Dichloropropane	1	ND
1,3-Dichloropropane	5	ND
2,2-Dichloropropane	5	ND
1,1-Dichloropropene	5	ND
1,3-Dichloropropene, Total	0.04	ND
1,4-Diethylbenzene	NA	ND
2-Butanone (Methyl Ethyl Ketone)	50	ND
2-Hexanone	50	ND
Acetone	50	2.0 J
Acrylonitrile	5	ND
Benzene	1	ND
Bromobenzene	5	ND
Bromochloromethane	5	ND
Bromodichloromethane	50	ND
Bromoform	50	ND
Carbon disulfide	NA	ND
Carbon Tetrachloride	5	ND
Chloroform	7	ND
Chlorobenzene	5	ND
Chloroethane	NA	ND
Chloromethane	NA	ND
o-Chlorotoluene	NA	ND
p-Chlorotoluene	NA	ND
cis-1,3-Dichloropropene	NA	ND
cis-1,2-Dichloroethene	NA	ND
Dibromochloromethane	50	ND
Dibromomethane	5	ND
Dichlorodifluoromethane	5	ND
1,4-Dioxane	NA	ND
Isopropylbenzene	5	ND
p-Isopropyltoluene	5	ND
o-Xylene	5	ND
p- & m- xylenes	5	ND
Xylenes, Total	5	ND
Bromomethane	5	ND
Ethylbenzene	5	ND
Ethyl ether	NA	ND
4-Ethyltoluene	NA	ND
Hexachlorobutadiene	0.5	ND
4-Methyl-2-pentanone	NA	ND
Methylene Chloride	5	ND
Methyl Tert Butyl Ether (MTBE)	NA	ND
Napthalene	10	ND
n-Butylbenzene	5	ND
n-Propylbenzene	5	ND
sec-Butylbenzene	5	ND
Styrene	5	ND
tert-Butylbenzene	5	ND
trans-1,2-Dichloroethene	5	ND
trans-1,3-Dichloropropene	0.4	ND
trans-1,4-Dichloro-2-butene	5	ND
Tetrachloroethene (PCE)	5	ND
Toluene	5	ND
Trichlorofluoromethane	5	ND
Trichloroethene	5	ND
Vinyl Acetate	NA	ND
Vinyl chloride	2	ND

Notes:
TCL VOCs -Target Compound List for volatile organic compounds.
TCL SVOCs - Target Compound List for semi-volatile organic compounds.
TAL Metals - Target Analyte List for metals.
PCBs - Polychlorinated Biphenyls
NYSDEC TOGS AWQSGV - New York State Department of Environmental Conservation Technical and Operational Guidance Series (1.1.1) Ambient Water Quality Standards
ug/kg - micrograms per kilogram (parts per billion).
mg/kg- milligrams per kilogram (parts per million).
J - estimated concentration.
NA - Not analyzed/Not available
ND - Analyte was not detected above method detection limits.

TABLE 13
SUMMARY OF GROUNDWATER ANALYTICAL DATA
209, 211-235 MCGUINNESS BOULEVARD
BROOKLYN, NEW YORK

TCL SVOCs (ug/L)	NYSDEC TOGS AWQSGV	VHB GW-1
4-Bromophenyl phenyl ether	NA	ND
Bis(2-chloroisopropyl)ether	NA	ND
Bis(2-chloroethoxy)methane	5	ND
1,2-Dichlorobenzene	5	ND
1,3-Dichlorobenzene	5	ND
1,4-Dichlorobenzene	5	ND
3,3'-Dichlorobenzidine	5	ND
2,4-Dichlorophenol	1	ND
2,4-Dimethylphenol	1	ND
2-4-Dinitrophenol	1	ND
2,4-Dinitrotoluene	5	ND
2,6-Dinitrotoluene	5	ND
4,6-Dinitro-o-cresol	NA	ND
1,2,4-Trichlorobenzene	5	ND
2,4,6-Trichlorophenol	NA	ND
2-Chloronaphthalene	10	ND
4-Chloroaniline	5	ND
4-Chlorophenyl phenyl ether	NA	ND
1,2,4,5-Tetrachlorobenzene	10	ND
2,4,5-Trichlorophenol	NA	ND
Acenaphthene	20	ND
Acenaphthylene	NA	ND
Acetophenone	NA	ND
Anthracene	50	ND
Benzo(a)anthracene	NA	ND
Benzo(a)pyrene	NA	ND
Benzo(b)fluoranthene	0.002	ND
Benzo(g,h,i)perylene	NA	ND
Benzo(k)fluoranthene	0.002	ND
Bis(2-ethylhexyl)phthalate	5	1.5 J
Bis(2-chloroethyl)ether	1.0	ND
Dibenzo(a,h)anthracene	NA	ND
3-Methylphenol/4-Methylphenol	NA	ND
Bezoic Acid	NA	ND
Benzyl Alcohol	NA	ND
Biphenyl		ND
Butyl benzyl phthalate	50	1.3 J
Carbazole	NA	ND
2-Chlorophenol	NA	ND
Chrysene	0.002	ND
Dibenzofuran	NA	ND
Di-n-butylphthalate	50	ND
Di-n-octylphthalate	50	ND
Diethyl phthalate	50	ND
Dimethyl phthalate	50	ND
Fluoranthene	50	0.06 J
Fluorene	50	ND
Hexachlorobenzene	0.04	ND
Hexachlorobutadiene	0.5	ND
Hexachlorocyclopentadiene	5	ND
Hexachloroethane	5	ND
Isophorone	50	ND
2-Methylnaphthalene	NA	ND
2-Methylphenol	NA	ND
3-Methylphenol/4-Methylphenol	NA	ND
Naphthalene	10	ND
2-Nitroaniline	5	ND
3-Nitroaniline	5	ND
4-Nitroaniline	5	ND
Nitrobenzene	0.4	ND
n-Nitrosodi-n-propylamine	NA	ND
NitrosoDiPhenylAmine(NDPA)/NPA	50	ND
2-Nitrophenol	NA	ND
4-Nitrophenol	NA	ND
P-Chloro-M-Cresol	NA	ND
Pentachlorophenol	1	ND
Phenanthrene	50	ND
Phenol	1	ND
Indeno(1,2,3-cd)Pyrene	0.002	ND
Pyrene	50	0.10 J

Notes:
TCL VOCs -Target Compound List for volatile organic compounds.
TCL SVOCs - Target Compound List for semi-volatile organic compounds.
TAL Metals - Target Analyte List for metals.
PCBs - Polychlorinated Biphenyls
NYSDEC TOGS AWQSGV - New York State Department of Environmental Conservation
Technical and Operational Guidance Series (1.1.1) Ambient Water Quality Standards
ug/kg - micrograms per kilogram (parts per billion).
mg/kg- milligrams per kilogram (parts per million).
J - estimated concentration.
NA - Not analyzed/Not available
ND - Analyte was not detected above method detection limits.

TABLE 13
SUMMARY OF GROUNDWATER ANALYTICAL DATA
209, 211-235 MCGUINNESS BOULEVARD
BROOKLYN, NEW YORK

Pesticides (ug/kg)	**NYSDEC TOGS AWQSGV**	**VHB GW-1**
Delta-BHC	NA	ND
Lindane	NA	ND
Alpha-BHC	NA	ND
Beta-BHC	NA	ND
Heptachlor	0.04	ND
Aldrin	NA	ND
Heptachlor Epoxide	0.03	ND
Endrin	NA	ND
Endrin ketone	5	ND
Dieldrin	0.004	ND
4,4'-DDD	0.3	ND
4,4'-DDE	0.2	ND
4,4'-DDT	0.2	ND
Endosulfan I	NA	ND
Endosulfan II	NA	ND
Endosulfan sulfate	NA	ND
Methoxychlor	35	ND
Toxaphene	0.6	ND
cis-Chlordane	NA	ND
trans-Chlordane	NA	ND
Chlordane	0.05	ND
PCBs (mg/kg)	**NYSDEC TOGS AWQSGV**	**VHB GW-1**
Aroclor 1060	NA	ND
Aroclor 1221	NA	ND
Aroclor 1232	NA	ND
Aroclor 1242	NA	ND
Aroclor 1248	NA	ND
Aroclor 1254	NA	ND
Aroclor 1260	NA	ND
Aroclor 1262	NA	ND
Aroclor 1268	NA	ND
PCBs, Total	0.09	ND

TAL Metals (ug/kg)	**NYSDEC TOGS AWQSGV**	**VHB GW-1**	
		Total	**Dissolved**
Aluminum	100	**40,600**	ND
Antimony	3	**3.10 J**	**50.73 J**
Arsenic	25	22.74	3.29 J
Barium	1,000	437.2	61.83
Beryllium	3	**5.21**	ND
Cadmium	5	1.28	ND
Calcium	NA	221,000	210,000
Chromium	50	**55.71**	ND
Cobalt	5	**28.45**	1.26 J
Copper	200	**273.6**	ND
Iron	300	**77,500**	190 J
Lead	25	**790.4**	ND
Magnesium	35,000	29,700	34,900
Manganese	300	**1,997**	**1,078**
Mercury	0.7	**1.45**	ND
Nickel	100	62.06	3.80 J
Potassium	NA	10,200	4,010
Selenium	10	**11.6**	ND
Silver	50	0.77	ND
Sodium	20,000	**20,500**	**25,600**
Thallium	0.5	**0.82**	ND
Vanadium	14	**67.64**	ND
Zinc	2,000	760.4	ND

Notes:
TCL VOCs -Target Compound List for volatile organic compounds.
TCL SVOCs - Target Compound List for semi-volatile organic compounds.
TAL Metals - Target Analyte List for metals.
PCBs - Polychlorinated Biphenyls
NYSDEC TOGS AWQSGV - New York State Department of Environmental Conservation Technical and Operational Guidance Series (1.1.1) Ambient Water Quality Standards
ug/kg - micrograms per kilogram (parts per billion).
mg/kg- milligrams per kilogram (parts per million).
J - estimated concentration.
NA - Not analyzed/Not available
ND - Analyte was not detected above method detection limits.

TABLE 14
SUMMARY OF SOIL VAPOR ANALYTICAL DATA
209, 211-235 MCGUINNESS BOULEVARD
BROOKLYN, NEW YORK

Parameters	Sample Identifer
TO-15 VOCs (ug/m3)	**VHB SV-1**
1,1,1-Trichloroethane*	ND
1,1,2,2-Tetrachloroethane	ND
1,1,2-Trichloro-1,2,2-Trifluoroethane	ND
1,1,2-Trichloroethane	ND
1,1-Dichloroethane	ND
1,1-Dichloroethene*	ND
1,2,4-Trichlorobenzene	ND
1,2,4-Trimethylbenzene	ND
1,2-Dibromoethane	ND
1,2-Dichloro-1,1,2,2-tetrafluoroethane	ND
1,2-Dichlorobenzene	ND
1,2-Dichloroethane	ND
1,2-Dichloropropane	ND
1,3,5-Trimethylbenzene	ND
1,3-Butadiene	5.60
1,3-Dichlorobenzene	ND
1,4-Dichlorobenzene	ND
1,4-Dioxane	ND
2,2,4-Trimethylpentane	ND
2-Butanone	21.1
2-Hexanone	ND
3-Chloropropene	ND
4-Ethyltoluene	ND
4-Methyl-2-pentanone	ND
Acetone	570
Benzene	42.2
Benzyl chloride	ND
Bromodichloromethane	ND
Bromoform	ND
Bromomethane	ND
Carbon disulfide	71.3
Carbon tetrachloride*	ND
Chlorobenzene	ND
Chloroethane	ND
Chloroform	ND
Chloromethane	ND
cis-1,2-Dichloroethene*	ND
cis-1,3-Dichloropropene	ND
Cyclohexane	179
Dibromochloromethane	ND
Dichlorodifluoromethane	ND
Ethyl Acetate	ND
Ethyl Alcohol	ND
Ethylbenzene	41.6
Heptane	135
Hexachlorobutadiene	ND
iso-Propyl Alcohol	19.6
Methyl tert butyl ether	ND
Methylene chloride	ND
n-Hexane	60.3
o-Xylene	40.0
p/m-Xylene	54.3
Styrene	ND
tert-Butyl Alcohol	ND
Tetrachloroethene*	ND
Tetrahydrofuran	ND
Toluene	162
trans-1,2-Dichloroethene	ND
trans-1,3-Dichloropropene	ND
Trichloroethene*	ND
Trichlorofluoromethane	ND
Vinyl bromide	ND
Vinyl chloride*	ND
Fixed Gasses (%)	**VHB SV-1**
Helium	ND

Notes:
NA - Not Available/Not Analyzed
ND - Not Detected
ug/m3 - micrograms per cubic meter
*Analyte subject to New York State Department of Health (NYSDOH) Guidance for Evaluating Soil Vapor Intrusion Soil Vapor/Indoor Air Matrices

Appendix A

Soil Boring Logs

VHB ENGINEERING, SURVEYING AND LANDSCAPE ARCHITECTURE, P.C. 100 Motor Parkway, Suite 135 Hauppauge, New York 11788			
Site Loc.	McGuiness Blvd	Boring ID	SB-1
Weather		Sheet	1 of 5
Drill Company	AARCO	Job #	29345
		Date	11/20/2014
Drillers		VHB Rep	AW
		DTW	
Rig	Geoprobe	Depth	Approx. 16 feet

% Recovery	Sample ID	PID Reading	Depth Feet	Lithology	Description	Notes
	SB-1 (0-2')	0.0	1		Black silty sand (soil), gravel and fine grained soil	
			2			
		0.0	3		Brown sily sand with some clay	Dense and dry material
			4			
		0.0	5		Brown sily sand with some clay	Dense and dry material
			6			
		133.2	7		Brown sily sand with some clay	Dense and dry material
			8			
	SB-1 (8-10')	412.3	9		Brown sily sand with some clay	Product Sheen noted at top of water table, addition sample taken (depth to water 9'-4")
			10			
		4.3	11		Brown sily sand with some clay	Wet material
			12			
		339.9	13		Brown sily sand with some clay	Wet material
			14			
	SB-1 (14-16')	35.1	15			
			16			
			17			
			18			
			19			
			20			

Notes:

Location: Northwest portions of the property.

VHB ENGINEERING, SURVEYING AND LANDSCAPE ARCHITECTURE, P.C. 100 Motor Parkway, Suite 135 Hauppauge, New York 11788	Site Loc.	McGuiness Blvd	Boring ID	SB-2
	Weather		Sheet	2 of 5
	Drill Company	AARCO	Job #	29345
			Date	11/20/2014
	Drillers		VHB Rep	AW
			DTW	
	Rig	Geoprobe	Depth	Approx. 16 feet

% Recovery	Sample ID	PID Reading	Depth Feet	Lithology	Description	Notes
	SB-2 (0-2')	0.0	1		Dark brown silty sand with concrete fragments.	Dry material
			2			
		0.0	3		Dark brown silty sand with concrete fragments.	Dry material
			4			
		0.0	5		Light brown silty sand	Loose and dry material
			6			
		0.0	7		Light brown silty sand	Loose and dry material
			8			
		0.0	9		Brown silty sand	Loose and dry material
			10			
		0.0	11		Dark brown silty sand	Wet material
			12			
		0.0	13			
			14			
	SB-2 (14-16')	0.0	15			
			16			
			17			
			18			
			19			
			20			

Notes:

Location: Central portions of the property.

VHB ENGINEERING, SURVEYING AND LANDSCAPE ARCHITECTURE, P.C. 100 Motor Parkway, Suite 135 Hauppauge, New York 11788			
Site Loc.	McGuiness Blvd	Boring ID	SB-3
Weather	Clear/Sunny	Sheet	3 of 5
Drill Company	AARCO	Job #	29345
		Date	11/20/2014
Drillers		VHB Rep	AW
		DTW	
Rig	Geoprobe	Depth	Approx. 16 feet

% Recovery	Sample ID	PID Reading	Depth Feet	Lithology	Description	Notes
	SB-3 (0-2')	0.0	1		Cobbles	Poor recovery
			2			
		0.0	3		Cobbles	Poor recovery
			4			
		0.0	5		Brown silty sand	Dense material
			6			
		0.0	7		Brown silty sand	Dense material
			8			
		0.0	9		Brown silty sand	Loose material
			10			
		0.0	11		Brown silty sand	Dense material
			12			
		0.0	13		Brown silty sand	Loose material
			14			
	SB-3 (14-16')	0.0	15		Brown silty sand	Dense material
			16			
			17			
			18			
			19			
			20			

Notes:

Location: Eastern-central portions of the property.

VHB ENGINEERING, SURVEYING AND LANDSCAPE ARCHITECTURE, P.C. 100 Motor Parkway, Suite 135 Hauppauge, New York 11788			
Site Loc.	McGuiness Blvd	Boring ID	SB-4
Weather		Sheet	4 of 5
Drill Company	AARCO	Job #	29345
		Date	11/20/2014
Drillers		VHB Rep	AW
		DTW	
Rig	Geoprobe	Depth	Approx. 16 feet

% Recovery	Sample ID	PID Reading	Depth Feet	Lithology	Description	Notes
	SB-4 (0-2')	0.0	1		Brown silty sand with trace gravel	Dry material
			2			
		0.0	3		Light brown sandy silt with trace gravel	Dry material
			4			
		0.0	5		Light brown sandy silt with trace gravel	Dry material
			6			
		0.0	7		Brown silty/clayey sand	
			8			
		0.0	9		Brown silty/clayey fine-grained sand	
			10			
		0.0	11		Brown silty/clayey fine-grained sand	
			12			
		0.0	13		Brown silty/clayey fine-grained sand	Wet material
			14			
	SB-4 (14-16')	0.0	15		Brown fine-grained sand	Wet material
			16			
			17			
			18			
			19			
			20			

Notes:

Location: Southern portions of the property.

VHB ENGINEERING, SURVEYING AND LANDSCAPE ARCHITECTURE, P.C. 100 Motor Parkway, Suite 135 Hauppauge, New York 11788	Site Loc.	McGuiness Blvd	Boring ID	SB-5
	Weather		Sheet	5 of 5
	Drill Company	AARCO	Job #	29345
			Date	11/20/2014
	Drillers		VHB Rep	AW
			DTW	
	Rig	Geoprobe	Depth	Approx. 16 feet

% Recovery	Sample ID	PID Reading	Depth Feet	Lithology	Description	Notes
	SB-5 (0-2')	0.0	1		Brown silty sand with some cobbles	Dry material
			2			
		0.0	3		Brown silty sand with some cobbles	Dry material
			4			
		0.0	5		Brown silty sand with some cobbles, brick and asphalt fragments	Poor recovery
			6			
		0.0	7		Brown silty sand with some cobbles, brick and asphalt fragments	Poor recovery
			8			
		0.0	9		Silty sand	Wet material
			10			
		0.0	11		Silty sand	Wet material
			12			
		0.0	13		Silty sand with large gravel	Wet material
			14			
	SB-5 (14-16')	0.0	15		Silty sand with large gravel	Wet material
			16			
			17			
			18			
			19			
			20			

Notes:	Location: Western-central portions of the property.

Appendix B

Laboratory Analytical Data

ANALYTICAL REPORT

Lab Number:	L1428173
Client:	VHB Engineering, Surveying and Landscape 100 Motor Parkway Suite 135 Hauppauge, NY 11788
ATTN:	Steve Kaplan
Phone:	(631) 234-3444
Project Name:	MCGUINNESS BOULEVARD
Project Number:	Not Specified
Report Date:	12/02/14

The original project report/data package is held by Alpha Analytical. This report/data package is paginated and should be reproduced only in its entirety. Alpha Analytical holds no responsibility for results and/or data that are not consistent with the original.

Certifications & Approvals: MA (M-MA086), NY (11148), CT (PH-0574), NH (2003), NJ NELAP (MA935), RI (LAO00065), ME (MA00086), PA (68-03671), USDA (Permit #P-330-11-00240), NC (666), TX (T104704476), DOD (L2217), US Army Corps of Engineers.

Eight Walkup Drive, Westborough, MA 01581-1019
508-898-9220 (Fax) 508-898-9193 800-624-9220 - www.alphalab.com

ANALYTICAL REPORT

Lab Number:	L1428320
Client:	VHB Engineering, Surveying and Landscape 100 Motor Parkway Suite 135 Hauppauge, NY 11788
ATTN:	Steve Kaplan
Phone:	(631) 234-3444
Project Name:	MCGUINNESS BOULEVARD
Project Number:	29345.00
Report Date:	12/02/14

The original project report/data package is held by Alpha Analytical. This report/data package is paginated and should be reproduced only in its entirety. Alpha Analytical holds no responsibility for results and/or data that are not consistent with the original.

Certifications & Approvals: NY (11627), CT (PH-0141), NH (2206), NJ NELAP (MA015), RI (LAO00299), PA (68-02089), LA NELAP (03090), FL (E87814), TX (T104704419), WA (C954), DOD (L2217.01), USDA (Permit #P330-11-00109), US Army Corps of Engineers.

320 Forbes Boulevard, Mansfield, MA 02048-1806
508-822-9300 (Fax) 508-822-3288 800-624-9220 - www.alphalab.com

Project Name: MCGUINNESS BOULEVARD
Project Number: 29345.00

Lab Number: L1428320
Report Date: 12/02/14

Alpha Sample ID	Client ID	Matrix	Sample Location	Collection Date/Time	Receive Date
L1428320-01	VHB SV-1	SOIL_VAPOR	209-235 MCGUINNESS BLVD	11/20/14 16:45	11/21/14

Project Name: MCGUINNESS BOULEVARD **Lab Number:** L1428320
Project Number: 29345.00 **Report Date:** 12/02/14

Case Narrative

The samples were received in accordance with the Chain of Custody and no significant deviations were encountered during the preparation or analysis unless otherwise noted. Sample Receipt, Container Information, and the Chain of Custody are located at the back of the report.

Results contained within this report relate only to the samples submitted under this Alpha Lab Number and meet all of the requirements of NELAC, for all NELAC accredited parameters. The data presented in this report is organized by parameter (i.e. VOC, SVOC, etc.). Sample specific Quality Control data (i.e. Surrogate Spike Recovery) is reported at the end of the target analyte list for each individual sample, followed by the Laboratory Batch Quality Control at the end of each parameter. If a sample was re-analyzed or re-extracted due to a required quality control corrective action and if both sets of data are reported, the Laboratory ID of the re-analysis or re-extraction is designated with an "R" or "RE", respectively. When multiple Batch Quality Control elements are reported (e.g. more than one LCS), the associated samples for each element are noted in the grey shaded header line of each data table. Any Laboratory Batch, Sample Specific % recovery or RPD value that is outside the listed Acceptance Criteria is bolded in the report. All specific QC information is also incorporated in the Data Usability format of our Data Merger tool where it can be reviewed along with any associated usability implications. Soil/sediments, solids and tissues are reported on a dry weight basis unless otherwise noted. Definitions of all data qualifiers and acronyms used in this report are provided in the Glossary located at the back of the report.

In reference to questions H (CAM) or 4 (RCP) when "NO" is checked, the performance criteria for CAM and RCP methods allow for some quality control failures to occur and still be within method compliance. In these instances the specific failure is not narrated but noted in the associated QC table. The information is also incorporated in the Data Usability format of our Data Merger tool where it can be reviewed along with any associated usability implications.

Please see the associated ADEx data file for a comparison of laboratory reporting limits that were achieved with the regulatory Numerical Standards requested on the Chain of Custody.

HOLD POLICY
For samples submitted on hold, Alpha's policy is to hold samples (with the exception of Air canisters) free of charge for 21 calendar days from the date the project is completed. After 21 calendar days, we will dispose of all samples submitted including those put on hold unless you have contacted your Client Service Representative and made arrangements for Alpha to continue to hold the samples. Air canisters will be disposed after 3 business days from the date the project is completed.

Please contact Client Services at 800-624-9220 with any questions.

Project Name:	MCGUINNESS BOULEVARD	**Lab Number:**	L1428320
Project Number:	29345.00	**Report Date:**	12/02/14

Case Narrative (continued)

Volatile Organics in Air

Canisters were released from the laboratory on November 18, 2014. The canister certification results are provided as an addendum.

Sample L1428320-01 has elevated detection limits due to the dilution required by the elevated concentrations of non-target compounds in the sample.

Helium in Air

Prior to sample analysis, the canister was pressurized with UHP Nitrogen in order to facilitate the transfer of sample to the Gas Chromatograph. The addition of Nitrogen resulted in a dilution of the sample. The reporting limits have been elevated accordingly.

I, the undersigned, attest under the pains and penalties of perjury that, to the best of my knowledge and belief and based upon my personal inquiry of those responsible for providing the information contained in this analytical report, such information is accurate and complete. This certificate of analysis is not complete unless this page accompanies any and all pages of this report.

Authorized Signature: Christopher J. Anderson

Title: Technical Director/Representative

Date: 12/02/14

AIR

Project Name: MCGUINNESS BOULEVARD
Project Number: 29345.00
Lab Number: L1428320
Report Date: 12/02/14

SAMPLE RESULTS

Lab ID: L1428320-01 D
Client ID: VHB SV-1
Sample Location: 209-235 MCGUINNESS BLVD
Matrix: Soil_Vapor
Anaytical Method: 48,TO-15
Analytical Date: 11/27/14 03:44
Analyst: RY

Date Collected: 11/20/14 16:45
Date Received: 11/21/14
Field Prep: Not Specified

Parameter	ppbV Results	ppbV RL	ppbV MDL	ug/m3 Results	ug/m3 RL	ug/m3 MDL	Qualifier	Dilution Factor
Volatile Organics in Air - Mansfield Lab								
Dichlorodifluoromethane	ND	2.00	--	ND	9.89	--		10
Chloromethane	ND	2.00	--	ND	4.13	--		10
1,2-Dichloro-1,1,2,2-tetrafluoroethane	ND	2.00	--	ND	14.0	--		10
Vinyl chloride	ND	2.00	--	ND	5.11	--		10
1,3-Butadiene	2.53	2.00	--	5.60	4.42	--		10
Bromomethane	ND	2.00	--	ND	7.77	--		10
Chloroethane	ND	2.00	--	ND	5.28	--		10
Ethyl Alcohol	ND	25.0	--	ND	47.1	--		10
Vinyl bromide	ND	2.00	--	ND	8.74	--		10
Acetone	240	10.0	--	570	23.8	--		10
Trichlorofluoromethane	ND	2.00	--	ND	11.2	--		10
iso-Propyl Alcohol	7.96	5.00	--	19.6	12.3	--		10
1,1-Dichloroethene	ND	2.00	--	ND	7.93	--		10
tert-Butyl Alcohol	ND	5.00	--	ND	15.2	--		10
Methylene chloride	ND	5.00	--	ND	17.4	--		10
3-Chloropropene	ND	2.00	--	ND	6.26	--		10
Carbon disulfide	22.9	2.00	--	71.3	6.23	--		10
1,1,2-Trichloro-1,2,2-Trifluoroethane	ND	2.00	--	ND	15.3	--		10
trans-1,2-Dichloroethene	ND	2.00	--	ND	7.93	--		10
1,1-Dichloroethane	ND	2.00	--	ND	8.09	--		10
Methyl tert butyl ether	ND	2.00	--	ND	7.21	--		10
2-Butanone	7.14	2.00	--	21.1	5.90	--		10
cis-1,2-Dichloroethene	ND	2.00	--	ND	7.93	--		10
Ethyl Acetate	ND	5.00	--	ND	18.0	--		10

Project Name: MCGUINNESS BOULEVARD
Project Number: 29345.00
Lab Number: L1428320
Report Date: 12/02/14

SAMPLE RESULTS

Lab ID: L1428320-01 D
Client ID: VHB SV-1
Sample Location: 209-235 MCGUINNESS BLVD
Date Collected: 11/20/14 16:45
Date Received: 11/21/14
Field Prep: Not Specified

Parameter	ppbV Results	ppbV RL	ppbV MDL	ug/m3 Results	ug/m3 RL	ug/m3 MDL	Qualifier	Dilution Factor
Volatile Organics in Air - Mansfield Lab								
Chloroform	ND	2.00	--	ND	9.77	--		10
Tetrahydrofuran	ND	2.00	--	ND	5.90	--		10
1,2-Dichloroethane	ND	2.00	--	ND	8.09	--		10
n-Hexane	17.1	2.00	--	60.3	7.05	--		10
1,1,1-Trichloroethane	ND	2.00	--	ND	10.9	--		10
Benzene	13.2	2.00	--	42.2	6.39	--		10
Carbon tetrachloride	ND	2.00	--	ND	12.6	--		10
Cyclohexane	52.0	2.00	--	179	6.88	--		10
1,2-Dichloropropane	ND	2.00	--	ND	9.24	--		10
Bromodichloromethane	ND	2.00	--	ND	13.4	--		10
1,4-Dioxane	ND	2.00	--	ND	7.21	--		10
Trichloroethene	ND	2.00	--	ND	10.7	--		10
2,2,4-Trimethylpentane	ND	2.00	--	ND	9.34	--		10
Heptane	33.0	2.00	--	135	8.20	--		10
cis-1,3-Dichloropropene	ND	2.00	--	ND	9.08	--		10
4-Methyl-2-pentanone	ND	2.00	--	ND	8.20	--		10
trans-1,3-Dichloropropene	ND	2.00	--	ND	9.08	--		10
1,1,2-Trichloroethane	ND	2.00	--	ND	10.9	--		10
Toluene	42.9	2.00	--	162	7.54	--		10
2-Hexanone	ND	2.00	--	ND	8.20	--		10
Dibromochloromethane	ND	2.00	--	ND	17.0	--		10
1,2-Dibromoethane	ND	2.00	--	ND	15.4	--		10
Tetrachloroethene	ND	2.00	--	ND	13.6	--		10
Chlorobenzene	ND	2.00	--	ND	9.21	--		10
Ethylbenzene	9.57	2.00	--	41.6	8.69	--		10
p/m-Xylene	12.5	4.00	--	54.3	17.4	--		10
Bromoform	ND	2.00	--	ND	20.7	--		10
Styrene	ND	2.00	--	ND	8.52	--		10

Project Name: MCGUINNESS BOULEVARD
Project Number: 29345.00
Lab Number: L1428320
Report Date: 12/02/14

SAMPLE RESULTS

Lab ID: L1428320-01 D
Client ID: VHB SV-1
Sample Location: 209-235 MCGUINNESS BLVD
Date Collected: 11/20/14 16:45
Date Received: 11/21/14
Field Prep: Not Specified

Parameter	ppbV Results	ppbV RL	ppbV MDL	ug/m3 Results	ug/m3 RL	ug/m3 MDL	Qualifier	Dilution Factor
Volatile Organics in Air - Mansfield Lab								
1,1,2,2-Tetrachloroethane	ND	2.00	--	ND	13.7	--		10
o-Xylene	9.21	2.00	--	40.0	8.69	--		10
4-Ethyltoluene	ND	2.00	--	ND	9.83	--		10
1,3,5-Trimethylbenzene	ND	2.00	--	ND	9.83	--		10
1,2,4-Trimethylbenzene	ND	2.00	--	ND	9.83	--		10
Benzyl chloride	ND	2.00	--	ND	10.4	--		10
1,3-Dichlorobenzene	ND	2.00	--	ND	12.0	--		10
1,4-Dichlorobenzene	ND	2.00	--	ND	12.0	--		10
1,2-Dichlorobenzene	ND	2.00	--	ND	12.0	--		10
1,2,4-Trichlorobenzene	ND	2.00	--	ND	14.8	--		10
Hexachlorobutadiene	ND	2.00	--	ND	21.3	--		10

Internal Standard	% Recovery	Qualifier	Acceptance Criteria
1,4-Difluorobenzene	87		60-140
Bromochloromethane	82		60-140
chlorobenzene-d5	122		60-140

Project Name: MCGUINNESS BOULEVARD **Lab Number:** L1428320

Project Number: 29345.00 **Report Date:** 12/02/14

Method Blank Analysis
Batch Quality Control

Analytical Method: 48,TO-15
Analytical Date: 11/26/14 14:26

Parameter	ppbV Results	ppbV RL	ppbV MDL	ug/m3 Results	ug/m3 RL	ug/m3 MDL	Qualifier	Dilution Factor
Volatile Organics in Air - Mansfield Lab for sample(s): 01 Batch: WG744230-4								
Chlorodifluoromethane	ND	0.200	--	ND	0.707	--		1
Propylene	ND	0.500	--	ND	0.861	--		1
Propane	ND	0.500	--	ND	0.902	--		1
Dichlorodifluoromethane	ND	0.200	--	ND	0.989	--		1
Chloromethane	ND	0.200	--	ND	0.413	--		1
1,2-Dichloro-1,1,2,2-tetrafluoroethane	ND	0.200	--	ND	1.40	--		1
Methanol	ND	5.00	--	ND	6.55	--		1
Vinyl chloride	ND	0.200	--	ND	0.511	--		1
1,3-Butadiene	ND	0.200	--	ND	0.442	--		1
Butane	ND	0.200	--	ND	0.475	--		1
Bromomethane	ND	0.200	--	ND	0.777	--		1
Chloroethane	ND	0.200	--	ND	0.528	--		1
Ethyl Alcohol	ND	2.50	--	ND	4.71	--		1
Dichlorofluoromethane	ND	0.200	--	ND	0.842	--		1
Vinyl bromide	ND	0.200	--	ND	0.874	--		1
Acrolein	ND	0.500	--	ND	1.15	--		1
Acetone	ND	1.00	--	ND	2.38	--		1
Acetonitrile	ND	0.200	--	ND	0.336	--		1
Trichlorofluoromethane	ND	0.200	--	ND	1.12	--		1
iso-Propyl Alcohol	ND	0.500	--	ND	1.23	--		1
Acrylonitrile	ND	0.200	--	ND	0.434	--		1
Pentane	ND	0.200	--	ND	0.590	--		1
Ethyl ether	ND	0.200	--	ND	0.606	--		1
1,1-Dichloroethene	ND	0.200	--	ND	0.793	--		1
tert-Butyl Alcohol	ND	0.500	--	ND	1.52	--		1

Project Name: MCGUINNESS BOULEVARD **Lab Number:** L1428320

Project Number: 29345.00 **Report Date:** 12/02/14

Method Blank Analysis
Batch Quality Control

Analytical Method: 48,TO-15
Analytical Date: 11/26/14 14:26

Parameter	ppbV Results	ppbV RL	ppbV MDL	ug/m3 Results	ug/m3 RL	ug/m3 MDL	Qualifier	Dilution Factor
Volatile Organics in Air - Mansfield Lab for sample(s): 01 Batch: WG744230-4								
Methylene chloride	ND	0.500	--	ND	1.74	--		1
3-Chloropropene	ND	0.200	--	ND	0.626	--		1
Carbon disulfide	ND	0.200	--	ND	0.623	--		1
1,1,2-Trichloro-1,2,2-Trifluoroethane	ND	0.200	--	ND	1.53	--		1
trans-1,2-Dichloroethene	ND	0.200	--	ND	0.793	--		1
1,1-Dichloroethane	ND	0.200	--	ND	0.809	--		1
Methyl tert butyl ether	ND	0.200	--	ND	0.721	--		1
Vinyl acetate	ND	0.200	--	ND	0.704	--		1
2-Butanone	ND	0.200	--	ND	0.590	--		1
cis-1,2-Dichloroethene	ND	0.200	--	ND	0.793	--		1
Ethyl Acetate	ND	0.500	--	ND	1.80	--		1
Chloroform	ND	0.200	--	ND	0.977	--		1
Tetrahydrofuran	ND	0.200	--	ND	0.590	--		1
2,2-Dichloropropane	ND	0.200	--	ND	0.924	--		1
1,2-Dichloroethane	ND	0.200	--	ND	0.809	--		1
n-Hexane	ND	0.200	--	ND	0.705	--		1
Isopropyl Ether	ND	0.200	--	ND	0.836	--		1
Ethyl-Tert-Butyl-Ether	ND	0.200	--	ND	0.836	--		1
1,1,1-Trichloroethane	ND	0.200	--	ND	1.09	--		1
1,1-Dichloropropene	ND	0.200	--	ND	0.908	--		1
Benzene	ND	0.200	--	ND	0.639	--		1
Carbon tetrachloride	ND	0.200	--	ND	1.26	--		1
Cyclohexane	ND	0.200	--	ND	0.688	--		1
Tertiary-Amyl Methyl Ether	ND	0.200	--	ND	0.836	--		1
Dibromomethane	ND	0.200	--	ND	1.42	--		1

Project Name: MCGUINNESS BOULEVARD **Lab Number:** L1428320

Project Number: 29345.00 **Report Date:** 12/02/14

Method Blank Analysis
Batch Quality Control

Analytical Method: 48,TO-15
Analytical Date: 11/26/14 14:26

Parameter	ppbV Results	ppbV RL	ppbV MDL	ug/m3 Results	ug/m3 RL	ug/m3 MDL	Qualifier	Dilution Factor
Volatile Organics in Air - Mansfield Lab for sample(s): 01 Batch: WG744230-4								
1,2-Dichloropropane	ND	0.200	--	ND	0.924	--		1
Bromodichloromethane	ND	0.200	--	ND	1.34	--		1
1,4-Dioxane	ND	0.200	--	ND	0.721	--		1
Trichloroethene	ND	0.200	--	ND	1.07	--		1
2,2,4-Trimethylpentane	ND	0.200	--	ND	0.934	--		1
Methyl methacrylate	ND	0.500	--	ND	2.05	--		1
Heptane	ND	0.200	--	ND	0.820	--		1
cis-1,3-Dichloropropene	ND	0.200	--	ND	0.908	--		1
4-Methyl-2-pentanone	ND	0.200	--	ND	0.820	--		1
trans-1,3-Dichloropropene	ND	0.200	--	ND	0.908	--		1
1,1,2-Trichloroethane	ND	0.200	--	ND	1.09	--		1
Toluene	ND	0.200	--	ND	0.754	--		1
1,3-Dichloropropane	ND	0.200	--	ND	0.924	--		1
2-Hexanone	ND	0.200	--	ND	0.820	--		1
Dibromochloromethane	ND	0.200	--	ND	1.70	--		1
1,2-Dibromoethane	ND	0.200	--	ND	1.54	--		1
Butyl Acetate	ND	0.500	--	ND	2.38	--		1
Octane	ND	0.200	--	ND	0.934	--		1
Tetrachloroethene	ND	0.200	--	ND	1.36	--		1
1,1,1,2-Tetrachloroethane	ND	0.200	--	ND	1.37	--		1
Chlorobenzene	ND	0.200	--	ND	0.921	--		1
Ethylbenzene	ND	0.200	--	ND	0.869	--		1
p/m-Xylene	ND	0.400	--	ND	1.74	--		1
Bromoform	ND	0.200	--	ND	2.07	--		1
Styrene	ND	0.200	--	ND	0.852	--		1

Project Name: MCGUINNESS BOULEVARD
Project Number: 29345.00
Lab Number: L1428320
Report Date: 12/02/14

Method Blank Analysis
Batch Quality Control

Analytical Method: 48,TO-15
Analytical Date: 11/26/14 14:26

Parameter	ppbV Results	ppbV RL	ppbV MDL	ug/m3 Results	ug/m3 RL	ug/m3 MDL	Qualifier	Dilution Factor
Volatile Organics in Air - Mansfield Lab for sample(s): 01 Batch: WG744230-4								
1,1,2,2-Tetrachloroethane	ND	0.200	--	ND	1.37	--		1
o-Xylene	ND	0.200	--	ND	0.869	--		1
1,2,3-Trichloropropane	ND	0.200	--	ND	1.21	--		1
Nonane (C9)	ND	0.200	--	ND	1.05	--		1
Isopropylbenzene	ND	0.200	--	ND	0.983	--		1
Bromobenzene	ND	0.200	--	ND	0.793	--		1
o-Chlorotoluene	ND	0.200	--	ND	1.04	--		1
n-Propylbenzene	ND	0.200	--	ND	0.983	--		1
p-Chlorotoluene	ND	0.200	--	ND	1.04	--		1
4-Ethyltoluene	ND	0.200	--	ND	0.983	--		1
1,3,5-Trimethylbenzene	ND	0.200	--	ND	0.983	--		1
tert-Butylbenzene	ND	0.200	--	ND	1.10	--		1
1,2,4-Trimethylbenzene	ND	0.200	--	ND	0.983	--		1
Decane (C10)	ND	0.200	--	ND	1.16	--		1
Benzyl chloride	ND	0.200	--	ND	1.04	--		1
1,3-Dichlorobenzene	ND	0.200	--	ND	1.20	--		1
1,4-Dichlorobenzene	ND	0.200	--	ND	1.20	--		1
sec-Butylbenzene	ND	0.200	--	ND	1.10	--		1
p-Isopropyltoluene	ND	0.200	--	ND	1.10	--		1
1,2-Dichlorobenzene	ND	0.200	--	ND	1.20	--		1
n-Butylbenzene	ND	0.200	--	ND	1.10	--		1
1,2-Dibromo-3-chloropropane	ND	0.200	--	ND	1.93	--		1
Undecane	ND	0.200	--	ND	1.28	--		1
Dodecane (C12)	ND	0.200	--	ND	1.39	--		1
1,2,4-Trichlorobenzene	ND	0.200	--	ND	1.48	--		1

Project Name: MCGUINNESS BOULEVARD
Project Number: 29345.00
Lab Number: L1428320
Report Date: 12/02/14

Method Blank Analysis
Batch Quality Control

Analytical Method: 48,TO-15
Analytical Date: 11/26/14 14:26

Parameter	ppbV Results	ppbV RL	ppbV MDL	ug/m3 Results	ug/m3 RL	ug/m3 MDL	Qualifier	Dilution Factor
Volatile Organics in Air - Mansfield Lab for sample(s): 01 Batch: WG744230-4								
Naphthalene	ND	0.200	--	ND	1.05	--		1
1,2,3-Trichlorobenzene	ND	0.200	--	ND	1.48	--		1
Hexachlorobutadiene	ND	0.200	--	ND	2.13	--		1

	Results	Qualifier	Units	RDL	Dilution Factor
Tentatively Identified Compounds					
No Tentatively Identified Compounds					

Lab Control Sample Analysis
Batch Quality Control

Project Name: MCGUINNESS BOULEVARD
Project Number: 29345.00
Lab Number: L1428320
Report Date: 12/02/14

Parameter	LCS %Recovery	Qual	LCSD %Recovery	Qual	%Recovery Limits	RPD	Qual	RPD Limits
Volatile Organics in Air - Mansfield Lab Associated sample(s): 01 Batch: WG744230-3								
Chlorodifluoromethane	102		-		70-130	-		
Propylene	99		-		70-130	-		
Propane	71		-		70-130	-		
Dichlorodifluoromethane	92		-		70-130	-		
Chloromethane	103		-		70-130	-		
1,2-Dichloro-1,1,2,2-tetrafluoroethane	113		-		70-130	-		
Methanol	93		-		70-130	-		
Vinyl chloride	102		-		70-130	-		
1,3-Butadiene	107		-		70-130	-		
Butane	91		-		70-130	-		
Bromomethane	102		-		70-130	-		
Chloroethane	98		-		70-130	-		
Ethyl Alcohol	100		-		70-130	-		
Dichlorofluoromethane	106		-		70-130	-		
Vinyl bromide	99		-		70-130	-		
Acrolein	89		-		70-130	-		
Acetone	118		-		70-130	-		
Acetonitrile	88		-		70-130	-		
Trichlorofluoromethane	128		-		70-130	-		
iso-Propyl Alcohol	99		-		70-130	-		
Acrylonitrile	90		-		70-130	-		

Lab Control Sample Analysis
Batch Quality Control

Project Name: MCGUINNESS BOULEVARD
Project Number: 29345.00
Lab Number: L1428320
Report Date: 12/02/14

Parameter	LCS %Recovery	Qual	LCSD %Recovery	Qual	%Recovery Limits	RPD	Qual	RPD Limits
Volatile Organics in Air - Mansfield Lab Associated sample(s): 01 Batch: WG744230-3								
Pentane	88		-		70-130	-		
Ethyl ether	90		-		70-130	-		
1,1-Dichloroethene	109		-		70-130	-		
tert-Butyl Alcohol	101		-		70-130	-		
Methylene chloride	103		-		70-130	-		
3-Chloropropene	101		-		70-130	-		
Carbon disulfide	97		-		70-130	-		
1,1,2-Trichloro-1,2,2-Trifluoroethane	106		-		70-130	-		
trans-1,2-Dichloroethene	87		-		70-130	-		
1,1-Dichloroethane	96		-		70-130	-		
Methyl tert butyl ether	91		-		70-130	-		
Vinyl acetate	99		-		70-130	-		
2-Butanone	89		-		70-130	-		
cis-1,2-Dichloroethene	104		-		70-130	-		
Ethyl Acetate	93		-		70-130	-		
Chloroform	107		-		70-130	-		
Tetrahydrofuran	78		-		70-130	-		
2,2-Dichloropropane	99		-		70-130	-		
1,2-Dichloroethane	113		-		70-130	-		
n-Hexane	84		-		70-130	-		
Isopropyl Ether	84		-		70-130	-		

Lab Control Sample Analysis
Batch Quality Control

Project Name: MCGUINNESS BOULEVARD
Project Number: 29345.00
Lab Number: L1428320
Report Date: 12/02/14

Parameter	LCS %Recovery	Qual	LCSD %Recovery	Qual	%Recovery Limits	RPD	Qual	RPD Limits
Volatile Organics in Air - Mansfield Lab Associated sample(s): 01 Batch: WG744230-3								
Ethyl-Tert-Butyl-Ether	82		-		70-130	-		
1,1,1-Trichloroethane	108		-		70-130	-		
1,1-Dichloropropene	88		-		70-130	-		
Benzene	85		-		70-130	-		
Carbon tetrachloride	117		-		70-130	-		
Cyclohexane	82		-		70-130	-		
Tertiary-Amyl Methyl Ether	80		-		70-130	-		
Dibromomethane	96		-		70-130	-		
1,2-Dichloropropane	88		-		70-130	-		
Bromodichloromethane	108		-		70-130	-		
1,4-Dioxane	85		-		70-130	-		
Trichloroethene	96		-		70-130	-		
2,2,4-Trimethylpentane	86		-		70-130	-		
Methyl methacrylate	84		-		70-130	-		
Heptane	82		-		70-130	-		
cis-1,3-Dichloropropene	98		-		70-130	-		
4-Methyl-2-pentanone	94		-		70-130	-		
trans-1,3-Dichloropropene	87		-		70-130	-		
1,1,2-Trichloroethane	92		-		70-130	-		
Toluene	80		-		70-130	-		
1,3-Dichloropropane	81		-		70-130	-		

Lab Control Sample Analysis
Batch Quality Control

Project Name: MCGUINNESS BOULEVARD
Project Number: 29345.00
Lab Number: L1428320
Report Date: 12/02/14

Parameter	LCS %Recovery	Qual	LCSD %Recovery	Qual	%Recovery Limits	RPD	Qual	RPD Limits
Volatile Organics in Air - Mansfield Lab Associated sample(s): 01 Batch: WG744230-3								
2-Hexanone	89		-		70-130	-		
Dibromochloromethane	100		-		70-130	-		
1,2-Dibromoethane	89		-		70-130	-		
Butyl Acetate	77		-		70-130	-		
Octane	77		-		70-130	-		
Tetrachloroethene	92		-		70-130	-		
1,1,1,2-Tetrachloroethane	89		-		70-130	-		
Chlorobenzene	86		-		70-130	-		
Ethylbenzene	86		-		70-130	-		
p/m-Xylene	89		-		70-130	-		
Bromoform	104		-		70-130	-		
Styrene	86		-		70-130	-		
1,1,2,2-Tetrachloroethane	92		-		70-130	-		
o-Xylene	91		-		70-130	-		
1,2,3-Trichloropropane	86		-		70-130	-		
Nonane (C9)	78		-		70-130	-		
Isopropylbenzene	86		-		70-130	-		
Bromobenzene	85		-		70-130	-		
o-Chlorotoluene	80		-		70-130	-		
n-Propylbenzene	85		-		70-130	-		
p-Chlorotoluene	85		-		70-130	-		

Lab Control Sample Analysis
Batch Quality Control

Project Name: MCGUINNESS BOULEVARD
Project Number: 29345.00
Lab Number: L1428320
Report Date: 12/02/14

Parameter	LCS %Recovery	Qual	LCSD %Recovery	Qual	%Recovery Limits	RPD	Qual	RPD Limits
Volatile Organics in Air - Mansfield Lab Associated sample(s): 01 Batch: WG744230-3								
4-Ethyltoluene	87		-		70-130	-		
1,3,5-Trimethylbenzene	90		-		70-130	-		
tert-Butylbenzene	84		-		70-130	-		
1,2,4-Trimethylbenzene	93		-		70-130	-		
Decane (C10)	81		-		70-130	-		
Benzyl chloride	97		-		70-130	-		
1,3-Dichlorobenzene	94		-		70-130	-		
1,4-Dichlorobenzene	93		-		70-130	-		
sec-Butylbenzene	86		-		70-130	-		
p-Isopropyltoluene	82		-		70-130	-		
1,2-Dichlorobenzene	95		-		70-130	-		
n-Butylbenzene	92		-		70-130	-		
1,2-Dibromo-3-chloropropane	100		-		70-130	-		
Undecane	89		-		70-130	-		
Dodecane (C12)	107		-		70-130	-		
1,2,4-Trichlorobenzene	108		-		70-130	-		
Naphthalene	101		-		70-130	-		
1,2,3-Trichlorobenzene	107		-		70-130	-		
Hexachlorobutadiene	106		-		70-130	-		

Lab Duplicate Analysis
Batch Quality Control

Project Name: MCGUINNESS BOULEVARD
Project Number: 29345.00

Lab Number: L1428320
Report Date: 12/02/14

Parameter	Native Sample	Duplicate Sample	Units	RPD	Qual	RPD Limits
Volatile Organics in Air - Mansfield Lab Associated sample(s): 01 QC Batch ID: WG744230-5 QC Sample: L1428187-01 Client ID: DUP Sample						
Propylene	110	111	ppbV	1		25
Dichlorodifluoromethane	1.23	1.47	ppbV	18		25
Chloromethane	ND	ND	ppbV	NC		25
1,2-Dichloro-1,1,2,2-tetrafluoroethane	ND	ND	ppbV	NC		25
Vinyl chloride	ND	ND	ppbV	NC		25
1,3-Butadiene	14.3	14.6	ppbV	2		25
Bromomethane	ND	ND	ppbV	NC		25
Chloroethane	ND	ND	ppbV	NC		25
Ethyl Alcohol	58.7	66.7	ppbV	13		25
Vinyl bromide	ND	ND	ppbV	NC		25
Acetone	459	502	ppbV	9		25
Trichlorofluoromethane	ND	ND	ppbV	NC		25
iso-Propyl Alcohol	ND	ND	ppbV	NC		25
1,1-Dichloroethene	ND	ND	ppbV	NC		25
Methylene chloride	ND	ND	ppbV	NC		25
3-Chloropropene	ND	ND	ppbV	NC		25
Carbon disulfide	22.6	24.4	ppbV	8		25
1,1,2-Trichloro-1,2,2-Trifluoroethane	ND	ND	ppbV	NC		25
trans-1,2-Dichloroethene	ND	ND	ppbV	NC		25

Lab Duplicate Analysis
Batch Quality Control

Project Name: MCGUINNESS BOULEVARD
Project Number: 29345.00

Lab Number: L1428320
Report Date: 12/02/14

Parameter	Native Sample	Duplicate Sample	Units	RPD	RPD Limits
Volatile Organics in Air - Mansfield Lab Associated sample(s): 01 QC Batch ID: WG744230-5 QC Sample: L1428187-01 Client ID: DUP Sample					
1,1-Dichloroethane	ND	ND	ppbV	NC	25
Methyl tert butyl ether	ND	ND	ppbV	NC	25
Vinyl acetate	ND	ND	ppbV	NC	25
2-Butanone	13.3	14.1	ppbV	6	25
cis-1,2-Dichloroethene	ND	ND	ppbV	NC	25
Ethyl Acetate	ND	ND	ppbV	NC	25
Chloroform	ND	ND	ppbV	NC	25
Tetrahydrofuran	ND	ND	ppbV	NC	25
1,2-Dichloroethane	ND	ND	ppbV	NC	25
n-Hexane	2.18	2.36	ppbV	8	25
1,1,1-Trichloroethane	ND	ND	ppbV	NC	25
Benzene	2.29	2.44	ppbV	6	25
Carbon tetrachloride	ND	ND	ppbV	NC	25
Cyclohexane	0.508	0.558	ppbV	9	25
1,2-Dichloropropane	ND	ND	ppbV	NC	25
Bromodichloromethane	ND	ND	ppbV	NC	25
1,4-Dioxane	ND	ND	ppbV	NC	25
Trichloroethene	ND	ND	ppbV	NC	25
2,2,4-Trimethylpentane	0.860	0.840	ppbV	2	25

Lab Duplicate Analysis
Batch Quality Control

Project Name: MCGUINNESS BOULEVARD
Project Number: 29345.00

Lab Number: L1428320
Report Date: 12/02/14

Parameter	Native Sample	Duplicate Sample	Units	RPD	RPD Limits
Volatile Organics in Air - Mansfield Lab Associated sample(s): 01 QC Batch ID: WG744230-5 QC Sample: L1428187-01 Client ID: DUP Sample					
Heptane	2.29	2.55	ppbV	11	25
cis-1,3-Dichloropropene	ND	ND	ppbV	NC	25
4-Methyl-2-pentanone	4.46	4.62	ppbV	4	25
trans-1,3-Dichloropropene	ND	ND	ppbV	NC	25
1,1,2-Trichloroethane	ND	ND	ppbV	NC	25
Toluene	11.7	12.6	ppbV	7	25
2-Hexanone	0.825	0.825	ppbV	0	25
Dibromochloromethane	ND	ND	ppbV	NC	25
1,2-Dibromoethane	ND	ND	ppbV	NC	25
Tetrachloroethene	1.72	2.01	ppbV	16	25
Chlorobenzene	ND	ND	ppbV	NC	25
Ethylbenzene	1.92	2.06	ppbV	7	25
p/m-Xylene	5.68	6.12	ppbV	7	25
Bromoform	ND	ND	ppbV	NC	25
Styrene	ND	ND	ppbV	NC	25
1,1,2,2-Tetrachloroethane	ND	ND	ppbV	NC	25
o-Xylene	1.86	2.06	ppbV	10	25
4-Ethyltoluene	ND	ND	ppbV	NC	25
1,3,5-Trimethylbenzene	ND	ND	ppbV	NC	25

Lab Duplicate Analysis
Batch Quality Control

Project Name: MCGUINNESS BOULEVARD
Project Number: 29345.00

Lab Number: L1428320
Report Date: 12/02/14

Parameter	Native Sample	Duplicate Sample	Units	RPD	RPD Limits
Volatile Organics in Air - Mansfield Lab Associated sample(s): 01 QC Batch ID: WG744230-5 QC Sample: L1428187-01 Client ID: DUP Sample					
1,2,4-Trimethylbenzene	0.708	0.762	ppbV	7	25
Benzyl chloride	ND	ND	ppbV	NC	25
1,3-Dichlorobenzene	ND	ND	ppbV	NC	25
1,4-Dichlorobenzene	ND	ND	ppbV	NC	25
1,2-Dichlorobenzene	ND	ND	ppbV	NC	25
1,2,4-Trichlorobenzene	ND	ND	ppbV	NC	25
Naphthalene	ND	ND	ppbV	NC	25
Hexachlorobutadiene	ND	ND	ppbV	NC	25

Project Name: MCGUINNESS BOULEVARD **Lab Number:** L1428320

Project Number: 29345.00 **Report Date:** 12/02/14

SAMPLE RESULTS

Lab ID:	L1428320-01 D	Date Collected:	11/20/14 16:45
Client ID:	VHB SV-1	Date Received:	11/21/14
Sample Location:	209-235 MCGUINNESS BLVD	Field Prep:	Not Specified
Matrix:	Soil_Vapor	Extraction Method:	
Analytical Method:	51,3C		
Analytical Date:	12/01/14 11:13		
Analyst:	MB		

Parameter	Result	Qualifier	Units	RL	MDL	Dilution Factor
Fixed Gases by GC - Mansfield Lab						
Helium	ND		%	0.148	--	1.485

Project Name: MCGUINNESS BOULEVARD **Lab Number:** L1428320

Project Number: 29345.00 **Report Date:** 12/02/14

Method Blank Analysis
Batch Quality Control

Analytical Method: 51,3C
Analytical Date: 12/01/14 10:56
Analyst: MB

Parameter	Result	Qualifier	Units	RL	MDL
Fixed Gases by GC - Mansfield Lab for sample(s): 01 Batch: WG744474-2					
Helium	ND		%	0.100	--

Lab Control Sample Analysis

Batch Quality Control

Project Name: MCGUINNESS BOULEVARD

Project Number: 29345.00

Lab Number: L1428320

Report Date: 12/02/14

Parameter	LCS %Recovery	Qual	LCSD %Recovery	Qual	%Recovery Limits	RPD	Qual	RPD Limits
Fixed Gases by GC - Mansfield Lab Associated sample(s): 01 Batch: WG744474-1								
Helium	105		-		80-120	-		

Lab Duplicate Analysis
Batch Quality Control

Project Name: MCGUINNESS BOULEVARD
Project Number: 29345.00

Lab Number: L1428320
Report Date: 12/02/14

Parameter	Native Sample	Duplicate Sample	Units	RPD	Qual	RPD Limits
Fixed Gases by GC - Mansfield Lab Associated sample(s): 01 QC Batch ID: WG744474-3 QC Sample: L1428320-01 Client ID: VHB SV-1						
Helium	ND	ND	%	NC		5

Project Name: MCGUINNESS BOULEVARD

Lab Number: L1428320

Project Number: 29345.00

Report Date: 12/02/14

Canister and Flow Controller Information

Samplenum	Client ID	Media ID	Media Type	Date Prepared	Bottle Order	Cleaning Batch ID	Can Leak Check	Initial Pressure (in. Hg)	Pressure on Receipt (in. Hg)	Flow Controler Leak Chk	Flow Out mL/min	Flow In mL/min	% RPD
L1428320-01	VHB SV-1	0581	#30 SV	11/18/14	111642		-	-	-	Pass	17.9	19.0	6
L1428320-01	VHB SV-1	476	2.7L Can	11/18/14	111642	L1425804-01	Pass	-29.3	-1.2	-	-	-	-

Project Name: BATCH CANISTER CERTIFICATION **Lab Number:** L1425804

Project Number: CANISTER QC BAT **Report Date:** 12/02/14

Air Canister Certification Results

Lab ID:	L1425804-01	Date Collected:	10/28/14 17:34
Client ID:	CAN 503 SHELF 2	Date Received:	10/29/14
Sample Location:		Field Prep:	Not Specified
Matrix:	Air		
Anaytical Method:	48,TO-15		
Analytical Date:	10/29/14 17:03		
Analyst:	RY		

	ppbV			ug/m3				
Parameter	**Results**	**RL**	**MDL**	**Results**	**RL**	**MDL**	**Qualifier**	**Dilution Factor**
Volatile Organics in Air - Mansfield Lab								
Chlorodifluoromethane	ND	0.200	--	ND	0.707	--		1
Propylene	ND	0.500	--	ND	0.861	--		1
Propane	ND	0.500	--	ND	0.902	--		1
Dichlorodifluoromethane	ND	0.200	--	ND	0.989	--		1
Chloromethane	ND	0.200	--	ND	0.413	--		1
Freon-114	ND	0.200	--	ND	1.40	--		1
Methanol	ND	5.00	--	ND	6.55	--		1
Vinyl chloride	ND	0.200	--	ND	0.511	--		1
1,3-Butadiene	ND	0.200	--	ND	0.442	--		1
Butane	ND	0.200	--	ND	0.475	--		1
Bromomethane	ND	0.200	--	ND	0.777	--		1
Chloroethane	ND	0.200	--	ND	0.528	--		1
Ethanol	ND	2.50	--	ND	4.71	--		1
Dichlorofluoromethane	ND	0.200	--	ND	0.842	--		1
Vinyl bromide	ND	0.200	--	ND	0.874	--		1
Acrolein	ND	0.500	--	ND	1.15	--		1
Acetone	ND	1.00	--	ND	2.38	--		1
Acetonitrile	ND	0.200	--	ND	0.336	--		1
Trichlorofluoromethane	ND	0.200	--	ND	1.12	--		1
Isopropanol	ND	0.500	--	ND	1.23	--		1
Acrylonitrile	ND	0.200	--	ND	0.434	--		1
Pentane	ND	0.200	--	ND	0.590	--		1
Ethyl ether	ND	0.200	--	ND	0.606	--		1
1,1-Dichloroethene	ND	0.200	--	ND	0.793	--		1
Tertiary butyl Alcohol	ND	0.500	--	ND	1.52	--		1

Project Name: BATCH CANISTER CERTIFICATION **Lab Number:** L1425804

Project Number: CANISTER QC BAT **Report Date:** 12/02/14

Air Canister Certification Results

Lab ID: L1425804-01 Date Collected: 10/28/14 17:34

Client ID: CAN 503 SHELF 2 Date Received: 10/29/14

Sample Location: Field Prep: Not Specified

	ppbV			ug/m3				
Parameter	**Results**	**RL**	**MDL**	**Results**	**RL**	**MDL**	**Qualifier**	**Dilution Factor**
Volatile Organics in Air - Mansfield Lab								
Methylene chloride	ND	0.500	--	ND	1.74	--		1
3-Chloropropene	ND	0.200	--	ND	0.626	--		1
Carbon disulfide	ND	0.200	--	ND	0.623	--		1
Freon-113	ND	0.200	--	ND	1.53	--		1
trans-1,2-Dichloroethene	ND	0.200	--	ND	0.793	--		1
1,1-Dichloroethane	ND	0.200	--	ND	0.809	--		1
Methyl tert butyl ether	ND	0.200	--	ND	0.721	--		1
Vinyl acetate	ND	0.200	--	ND	0.704	--		1
2-Butanone	ND	0.200	--	ND	0.590	--		1
cis-1,2-Dichloroethene	ND	0.200	--	ND	0.793	--		1
Ethyl Acetate	ND	0.500	--	ND	1.80	--		1
Chloroform	ND	0.200	--	ND	0.977	--		1
Tetrahydrofuran	ND	0.200	--	ND	0.590	--		1
2,2-Dichloropropane	ND	0.200	--	ND	0.924	--		1
1,2-Dichloroethane	ND	0.200	--	ND	0.809	--		1
n-Hexane	ND	0.200	--	ND	0.705	--		1
tert-Butyl Ethyl Ether	ND	0.200	--	ND	0.836	--		1
1,1,1-Trichloroethane	ND	0.200	--	ND	1.09	--		1
1,1-Dichloropropene	ND	0.200	--	ND	0.908	--		1
Benzene	ND	0.200	--	ND	0.639	--		1
Carbon tetrachloride	ND	0.200	--	ND	1.26	--		1
Cyclohexane	ND	0.200	--	ND	0.688	--		1
tert-Amyl Methyl Ether	ND	0.200	--	ND	0.836	--		1
Dibromomethane	ND	0.200	--	ND	1.42	--		1
1,2-Dichloropropane	ND	0.200	--	ND	0.924	--		1
Bromodichloromethane	ND	0.200	--	ND	1.34	--		1
1,4-Dioxane	ND	0.200	--	ND	0.721	--		1
Trichloroethene	ND	0.200	--	ND	1.07	--		1

Project Name: BATCH CANISTER CERTIFICATION **Lab Number:** L1425804

Project Number: CANISTER QC BAT **Report Date:** 12/02/14

Air Canister Certification Results

Lab ID: L1425804-01 Date Collected: 10/28/14 17:34

Client ID: CAN 503 SHELF 2 Date Received: 10/29/14

Sample Location: Field Prep: Not Specified

	ppbV			ug/m3				
Parameter	**Results**	**RL**	**MDL**	**Results**	**RL**	**MDL**	**Qualifier**	**Dilution Factor**
Volatile Organics in Air - Mansfield Lab								
2,2,4-Trimethylpentane	ND	0.200	--	ND	0.934	--		1
Methyl Methacrylate	ND	0.500	--	ND	2.05	--		1
Heptane	ND	0.200	--	ND	0.820	--		1
cis-1,3-Dichloropropene	ND	0.200	--	ND	0.908	--		1
4-Methyl-2-pentanone	ND	0.200	--	ND	0.820	--		1
trans-1,3-Dichloropropene	ND	0.200	--	ND	0.908	--		1
1,1,2-Trichloroethane	ND	0.200	--	ND	1.09	--		1
Toluene	ND	0.200	--	ND	0.754	--		1
1,3-Dichloropropane	ND	0.200	--	ND	0.924	--		1
2-Hexanone	ND	0.200	--	ND	0.820	--		1
Dibromochloromethane	ND	0.200	--	ND	1.70	--		1
1,2-Dibromoethane	ND	0.200	--	ND	1.54	--		1
Butyl acetate	ND	0.500	--	ND	2.38	--		1
Octane	ND	0.200	--	ND	0.934	--		1
Tetrachloroethene	ND	0.200	--	ND	1.36	--		1
1,1,1,2-Tetrachloroethane	ND	0.200	--	ND	1.37	--		1
Chlorobenzene	ND	0.200	--	ND	0.921	--		1
Ethylbenzene	ND	0.200	--	ND	0.869	--		1
p/m-Xylene	ND	0.400	--	ND	1.74	--		1
Bromoform	ND	0.200	--	ND	2.07	--		1
Styrene	ND	0.200	--	ND	0.852	--		1
1,1,2,2-Tetrachloroethane	ND	0.200	--	ND	1.37	--		1
o-Xylene	ND	0.200	--	ND	0.869	--		1
1,2,3-Trichloropropane	ND	0.200	--	ND	1.21	--		1
Nonane	ND	0.200	--	ND	1.05	--		1
Isopropylbenzene	ND	0.200	--	ND	0.983	--		1
Bromobenzene	ND	0.200	--	ND	0.793	--		1
2-Chlorotoluene	ND	0.200	--	ND	1.04	--		1

Project Name: BATCH CANISTER CERTIFICATION **Lab Number:** L1425804

Project Number: CANISTER QC BAT **Report Date:** 12/02/14

Air Canister Certification Results

Lab ID: L1425804-01 Date Collected: 10/28/14 17:34

Client ID: CAN 503 SHELF 2 Date Received: 10/29/14

Sample Location: Field Prep: Not Specified

Parameter	ppbV Results	ppbV RL	ppbV MDL	ug/m3 Results	ug/m3 RL	ug/m3 MDL	Qualifier	Dilution Factor
Volatile Organics in Air - Mansfield Lab								
n-Propylbenzene	ND	0.200	--	ND	0.983	--		1
4-Chlorotoluene	ND	0.200	--	ND	1.04	--		1
4-Ethyltoluene	ND	0.200	--	ND	0.983	--		1
1,3,5-Trimethylbenzene	ND	0.200	--	ND	0.983	--		1
tert-Butylbenzene	ND	0.200	--	ND	1.10	--		1
1,2,4-Trimethylbenzene	ND	0.200	--	ND	0.983	--		1
Decane	ND	0.200	--	ND	1.16	--		1
Benzyl chloride	ND	0.200	--	ND	1.04	--		1
1,3-Dichlorobenzene	ND	0.200	--	ND	1.20	--		1
1,4-Dichlorobenzene	ND	0.200	--	ND	1.20	--		1
sec-Butylbenzene	ND	0.200	--	ND	1.10	--		1
p-Isopropyltoluene	ND	0.200	--	ND	1.10	--		1
1,2-Dichlorobenzene	ND	0.200	--	ND	1.20	--		1
n-Butylbenzene	ND	0.200	--	ND	1.10	--		1
1,2-Dibromo-3-chloropropane	ND	0.200	--	ND	1.93	--		1
Undecane	ND	0.200	--	ND	1.28	--		1
Dodecane	ND	0.200	--	ND	1.39	--		1
1,2,4-Trichlorobenzene	ND	0.200	--	ND	1.48	--		1
Naphthalene	ND	0.200	--	ND	1.05	--		1
1,2,3-Trichlorobenzene	ND	0.200	--	ND	1.48	--		1
Hexachlorobutadiene	ND	0.200	--	ND	2.13	--		1

	Results	Qualifier	Units	RDL	Dilution Factor
Tentatively Identified Compounds					
No Tentatively Identified Compounds					

Project Name: BATCH CANISTER CERTIFICATION **Lab Number:** L1425804

Project Number: CANISTER QC BAT **Report Date:** 12/02/14

Air Canister Certification Results

Lab ID: L1425804-01 Date Collected: 10/28/14 17:34

Client ID: CAN 503 SHELF 2 Date Received: 10/29/14

Sample Location: Field Prep: Not Specified

Parameter	ppbV Results	ppbV RL	ppbV MDL	ug/m3 Results	ug/m3 RL	ug/m3 MDL	Qualifier	Dilution Factor
Volatile Organics in Air - Mansfield Lab								

Internal Standard	% Recovery	Qualifier	Acceptance Criteria
1,4-Difluorobenzene	86		60-140
Bromochloromethane	107		60-140
chlorobenzene-d5	91		60-140

Project Name: BATCH CANISTER CERTIFICATION **Lab Number:** L1425804

Project Number: CANISTER QC BAT **Report Date:** 12/02/14

Air Canister Certification Results

Lab ID:	L1425804-01	Date Collected:	10/28/14 17:34
Client ID:	CAN 503 SHELF 2	Date Received:	10/29/14
Sample Location:		Field Prep:	Not Specified
Matrix:	Air		
Anaytical Method:	48,TO-15-SIM		
Analytical Date:	10/29/14 17:03		
Analyst:	RY		

	ppbV			ug/m3				
Parameter	**Results**	**RL**	**MDL**	**Results**	**RL**	**MDL**	**Qualifier**	**Dilution Factor**
Volatile Organics in Air by SIM - Mansfield Lab								
Dichlorodifluoromethane	ND	0.050	--	ND	0.247	--		1
Chloromethane	ND	0.500	--	ND	1.03	--		1
Freon-114	ND	0.050	--	ND	0.349	--		1
Vinyl chloride	ND	0.020	--	ND	0.051	--		1
1,3-Butadiene	ND	0.020	--	ND	0.044	--		1
Bromomethane	ND	0.020	--	ND	0.078	--		1
Chloroethane	ND	0.020	--	ND	0.053	--		1
Acetone	ND	2.00	--	ND	4.75	--		1
Trichlorofluoromethane	ND	0.050	--	ND	0.281	--		1
Acrylonitrile	ND	0.500	--	ND	1.09	--		1
1,1-Dichloroethene	ND	0.020	--	ND	0.079	--		1
Methylene chloride	ND	1.00	--	ND	3.47	--		1
Freon-113	ND	0.050	--	ND	0.383	--		1
Halothane	ND	0.050	--	ND	0.404	--		1
trans-1,2-Dichloroethene	ND	0.020	--	ND	0.079	--		1
1,1-Dichloroethane	ND	0.020	--	ND	0.081	--		1
Methyl tert butyl ether	ND	0.020	--	ND	0.072	--		1
2-Butanone	ND	0.500	--	ND	1.47	--		1
cis-1,2-Dichloroethene	ND	0.020	--	ND	0.079	--		1
Chloroform	ND	0.020	--	ND	0.098	--		1
1,2-Dichloroethane	ND	0.020	--	ND	0.081	--		1
1,1,1-Trichloroethane	ND	0.020	--	ND	0.109	--		1
Benzene	ND	0.100	--	ND	0.319	--		1
Carbon tetrachloride	ND	0.020	--	ND	0.126	--		1
1,2-Dichloropropane	ND	0.020	--	ND	0.092	--		1

Project Name: BATCH CANISTER CERTIFICATION **Lab Number:** L1425804

Project Number: CANISTER QC BAT **Report Date:** 12/02/14

Air Canister Certification Results

Lab ID: L1425804-01 Date Collected: 10/28/14 17:34

Client ID: CAN 503 SHELF 2 Date Received: 10/29/14

Sample Location: Field Prep: Not Specified

Parameter	ppbV Results	ppbV RL	ppbV MDL	ug/m3 Results	ug/m3 RL	ug/m3 MDL	Qualifier	Dilution Factor
Volatile Organics in Air by SIM - Mansfield Lab								
Bromodichloromethane	ND	0.020	--	ND	0.134	--		1
1,4-Dioxane	ND	0.100	--	ND	0.360	--		1
Trichloroethene	ND	0.020	--	ND	0.107	--		1
cis-1,3-Dichloropropene	ND	0.020	--	ND	0.091	--		1
4-Methyl-2-pentanone	ND	0.500	--	ND	2.05	--		1
trans-1,3-Dichloropropene	ND	0.020	--	ND	0.091	--		1
1,1,2-Trichloroethane	ND	0.020	--	ND	0.109	--		1
Toluene	ND	0.050	--	ND	0.188	--		1
Dibromochloromethane	ND	0.020	--	ND	0.170	--		1
1,2-Dibromoethane	ND	0.020	--	ND	0.154	--		1
Tetrachloroethene	ND	0.020	--	ND	0.136	--		1
1,1,1,2-Tetrachloroethane	ND	0.020	--	ND	0.137	--		1
Chlorobenzene	ND	0.020	--	ND	0.092	--		1
Ethylbenzene	ND	0.020	--	ND	0.087	--		1
p/m-Xylene	ND	0.040	--	ND	0.174	--		1
Bromoform	ND	0.020	--	ND	0.207	--		1
Styrene	ND	0.020	--	ND	0.085	--		1
1,1,2,2-Tetrachloroethane	ND	0.020	--	ND	0.137	--		1
o-Xylene	ND	0.020	--	ND	0.087	--		1
Isopropylbenzene	ND	0.500	--	ND	2.46	--		1
4-Ethyltoluene	ND	0.020	--	ND	0.098	--		1
1,3,5-Trimethybenzene	ND	0.020	--	ND	0.098	--		1
1,2,4-Trimethylbenzene	ND	0.020	--	ND	0.098	--		1
1,3-Dichlorobenzene	ND	0.020	--	ND	0.120	--		1
1,4-Dichlorobenzene	ND	0.020	--	ND	0.120	--		1
sec-Butylbenzene	ND	0.500	--	ND	2.74	--		1
p-Isopropyltoluene	ND	0.500	--	ND	2.74	--		1
1,2-Dichlorobenzene	ND	0.020	--	ND	0.120	--		1

Project Name: BATCH CANISTER CERTIFICATION **Lab Number:** L1425804

Project Number: CANISTER QC BAT **Report Date:** 12/02/14

Air Canister Certification Results

Lab ID: L1425804-01 Date Collected: 10/28/14 17:34

Client ID: CAN 503 SHELF 2 Date Received: 10/29/14

Sample Location: Field Prep: Not Specified

Parameter	ppbV Results	ppbV RL	ppbV MDL	ug/m3 Results	ug/m3 RL	ug/m3 MDL	Qualifier	Dilution Factor
Volatile Organics in Air by SIM - Mansfield Lab								
n-Butylbenzene	ND	0.500	--	ND	2.74	--		1
1,2,4-Trichlorobenzene	ND	0.050	--	ND	0.371	--		1
Naphthalene	ND	0.050	--	ND	0.262	--		1
1,2,3-Trichlorobenzene	ND	0.050	--	ND	0.371	--		1
Hexachlorobutadiene	ND	0.050	--	ND	0.533	--		1

Internal Standard	% Recovery	Qualifier	Acceptance Criteria
1,4-difluorobenzene	90		60-140
bromochloromethane	93		60-140
chlorobenzene-d5	92		60-140

Project Name: MCGUINNESS BOULEVARD
Project Number: 29345.00

Lab Number: L1428320
Report Date: 12/02/14

Sample Receipt and Container Information

Were project specific reporting limits specified? YES

Reagent H2O Preserved Vials Frozen on: NA

Cooler Information

Cooler	Custody Seal
N/A	Present/Intact

Container Information

Container ID	Container Type	Cooler	pH	Temp deg C	Pres	Seal	Analysis(*)
L1428320-01A	Canister - 2.7 Liter	N/A	NA		Y	Present/Intact	FIXGAS(30),TO15-LL(30)

*Values in parentheses indicate holding time in days

Project Name:	MCGUINNESS BOULEVARD	**Lab Number:**	L1428320
Project Number:	29345.00	**Report Date:**	12/02/14

GLOSSARY

Acronyms

EDL	- Estimated Detection Limit: This value represents the level to which target analyte concentrations are reported as estimated values, when those target analyte concentrations are quantified below the reporting limit (RL). The EDL includes any adjustments from dilutions, concentrations or moisture content, where applicable. The use of EDLs is specific to the analysis of PAHs using Solid-Phase Microextraction (SPME).
EPA	- Environmental Protection Agency.
LCS	- Laboratory Control Sample: A sample matrix, free from the analytes of interest, spiked with verified known amounts of analytes or a material containing known and verified amounts of analytes.
LCSD	- Laboratory Control Sample Duplicate: Refer to LCS.
LFB	- Laboratory Fortified Blank: A sample matrix, free from the analytes of interest, spiked with verified known amounts of analytes or a material containing known and verified amounts of analytes.
MDL	- Method Detection Limit: This value represents the level to which target analyte concentrations are reported as estimated values, when those target analyte concentrations are quantified below the reporting limit (RL). The MDL includes any adjustments from dilutions, concentrations or moisture content, where applicable.
MS	- Matrix Spike Sample: A sample prepared by adding a known mass of target analyte to a specified amount of matrix sample for which an independent estimate of target analyte concentration is available.
MSD	- Matrix Spike Sample Duplicate: Refer to MS.
NA	- Not Applicable.
NC	- Not Calculated: Term is utilized when one or more of the results utilized in the calculation are non-detect at the parameter's reporting unit.
NI	- Not Ignitable.
RL	- Reporting Limit: The value at which an instrument can accurately measure an analyte at a specific concentration. The RL includes any adjustments from dilutions, concentrations or moisture content, where applicable.
RPD	- Relative Percent Difference: The results from matrix and/or matrix spike duplicates are primarily designed to assess the precision of analytical results in a given matrix and are expressed as relative percent difference (RPD). Values which are less than five times the reporting limit for any individual parameter are evaluated by utilizing the absolute difference between the values; although the RPD value will be provided in the report.
SRM	- Standard Reference Material: A reference sample of a known or certified value that is of the same or similar matrix as the associated field samples.

Footnotes

1	- The reference for this analyte should be considered modified since this analyte is absent from the target analyte list of the original method.

Terms

Total: With respect to Organic analyses, a 'Total' result is defined as the summation of results for individual isomers or Aroclors. If a 'Total' result is requested, the results of its individual components will also be reported. This is applicable to 'Total' results for methods 8260, 8081 and 8082.

Analytical Method: Both the document from which the method originates and the analytical reference method. (Example: EPA 8260B is shown as 1,8260B.) The codes for the reference method documents are provided in the References section of the Addendum.

Data Qualifiers

A	- Spectra identified as "Aldol Condensation Product".
B	- The analyte was detected above the reporting limit in the associated method blank. Flag only applies to associated field samples that have detectable concentrations of the analyte at less than ten times (10x) the concentration found in the blank. For MCP-related projects, flag only applies to associated field samples that have detectable concentrations of the analyte at less than ten times (10x) the concentration found in the blank. For DOD-related projects, flag only applies to associated field samples that have detectable concentrations of the analyte at less than ten times (10x) the concentration found in the blank AND the analyte was detected above one-half the reporting limit (or above the reporting limit for common lab contaminants) in the associated method blank. For NJ-Air-related projects, flag only applies to associated field samples that have detectable concentrations of the analyte above the reporting limit. For NJ-related projects (excluding Air), flag only applies to associated field samples that have detectable concentrations of the analyte, which was detected above the reporting limit in the associated method blank or above five times the reporting limit for common lab contaminants (Phthalates, Acetone, Methylene Chloride, 2-Butanone).
C	- Co-elution: The target analyte co-elutes with a known lab standard (i.e. surrogate, internal standards, etc.) for co-extracted analyses.
D	- Concentration of analyte was quantified from diluted analysis. Flag only applies to field samples that have detectable concentrations of the analyte.
E	- Concentration of analyte exceeds the range of the calibration curve and/or linear range of the instrument.

Report Format: Data Usability Report

Project Name:	MCGUINNESS BOULEVARD	**Lab Number:**	L1428320
Project Number:	29345.00	**Report Date:**	12/02/14

Data Qualifiers

G - The concentration may be biased high due to matrix interferences (i.e, co-elution) with non-target compound(s). The result should be considered estimated.

H - The analysis of pH was performed beyond the regulatory-required holding time of 15 minutes from the time of sample collection.

I - The lower value for the two columns has been reported due to obvious interference.

M - Reporting Limit (RL) exceeds the MCP CAM Reporting Limit for this analyte.

NJ - Presumptive evidence of compound. This represents an estimated concentration for Tentatively Identified Compounds (TICs), where the identification is based on a mass spectral library search.

P - The RPD between the results for the two columns exceeds the method-specified criteria.

Q - The quality control sample exceeds the associated acceptance criteria. For DOD-related projects, LCS and/or Continuing Calibration Standard exceedences are also qualified on all associated sample results. Note: This flag is not applicable for matrix spike recoveries when the sample concentration is greater than 4x the spike added or for batch duplicate RPD when the sample concentrations are less than 5x the RL. (Metals only.)

R - Analytical results are from sample re-analysis.

RE - Analytical results are from sample re-extraction.

S - Analytical results are from modified screening analysis.

J - Estimated value. This represents an estimated concentration for Tentatively Identified Compounds (TICs).

ND - Not detected at the reporting limit (RL) for the sample.

Report Format: Data Usability Report

Project Name:	MCGUINNESS BOULEVARD	**Lab Number:**	L1428320
Project Number:	29345.00	**Report Date:**	12/02/14

REFERENCES

48 Compendium of Methods for the Determination of Toxic Organic Compounds in Ambient Air. Second Edition. EPA/625/R-96/010b, January 1999.

51 Determination of Carbon Dioxide, Methane, Nitrogen and Oxygen from Stationary Sources. Method 3C. Appendix A, Part 60, 40 CFR (Code of Federal Regulations). June 20, 1996.

LIMITATION OF LIABILITIES

Alpha Analytical performs services with reasonable care and diligence normal to the analytical testing laboratory industry. In the event of an error, the sole and exclusive responsibility of Alpha Analytical shall be to re-perform the work at it's own expense. In no event shall Alpha Analytical be held liable for any incidental, consequential or special damages, including but not limited to, damages in any way connected with the use of, interpretation of, information or analysis provided by Alpha Analytical.

We strongly urge our clients to comply with EPA protocol regarding sample volume, preservation, cooling, containers, sampling procedures, holding time and splitting of samples in the field.

Certification Information

Last revised April 15, 2014

The following analytes are not included in our NELAP Scope of Accreditation:

Westborough Facility
EPA 524.2: Acetone, 2-Butanone (Methyl ethyl ketone (MEK)), Tert-butyl alcohol, 2-Hexanone, Tetrahydrofuran, 1,3,5-Trichlorobenzene, 4-Methyl-2-pentanone (MIBK), Carbon disulfide, Diethyl ether.
EPA 8260C: 1,2,4,5-Tetramethylbenzene, 4-Ethyltoluene, Iodomethane (methyl iodide), Methyl methacrylate, Azobenzene.
EPA 8330A/B: PETN, Picric Acid, Nitroglycerine, 2,6-DANT, 2,4-DANT.
EPA 8270D: 1-Methylnaphthalene, Dimethylnaphthalene,1,4-Diphenylhydrazine.
EPA 625: 4-Chloroaniline, 4-Methylphenol.
SM4500: Soil: Total Phosphorus, TKN, NO2, NO3.
EPA 9071: Total Petroleum Hydrocarbons, Oil & Grease.

Mansfield Facility
EPA 8270D: Biphenyl.
EPA 2540D: TSS
EPA TO-15: Halothane, 2,4,4-Trimethyl-2-pentene, 2,4,4-Trimethyl-1-pentene, Thiophene, 2-Methylthiophene, 3-Methylthiophene, 2-Ethylthiophene, 1,2,3-Trimethylbenzene, Indan, Indene, 1,2,4,5-Tetramethylbenzene, Benzothiophene, 1-Methylnaphthalene.

The following analytes are included in our Massachusetts DEP Scope of Accreditation, Westborough Facility:

Drinking Water
EPA 200.8: Sb,As,Ba,Be,Cd,Cr,Cu,Pb,Ni,Se,Tl; **EPA 200.7**: Ba,Be,Ca,Cd,Cr,Cu,Na; **EPA 245.1:** Mercury;
EPA 300.0: Nitrate-N, Fluoride, Sulfate; **EPA 353.2**: Nitrate-N, Nitrite-N; **SM4500NO3-F**: Nitrate-N, Nitrite-N; **SM4500F-C, SM4500CN-CE, EPA 180.1, SM2130B, SM4500Cl-D, SM2320B, SM2540C, SM4500H-B**
EPA 332: Perchlorate.
Microbiology: **SM9215B; SM9223-P/A, SM9223B-Colilert-QT, Enterolert-QT.**

Non-Potable Water
EPA 200.8: Al,Sb,As,Be,Cd,Cr,Cu,Pb,Mn,Ni,Se,Ag,Tl,Zn;
EPA 200.7: Al,Sb,As,Be,Cd,Ca,Cr,Co,Cu,Fe,Pb,Mg,Mn,Mo,Ni,K,Se,Ag,Na,Sr,Ti,Tl,V,Zn;
EPA 245.1, SM4500H,B, EPA 120.1, SM2510B, SM2540C, SM2340B, SM2320B, SM4500CL-E, SM4500F-BC, SM426C, SM4500NH3-BH, **EPA 350.1**: Ammonia-N, **LACHAT 10-107-06-1-B**: Ammonia-N, **SM4500NO3-F,**
EPA 353.2: Nitrate-N**, SM4500NH3-BC-NES, EPA 351.1, SM4500P-E, SM4500P-B, E, SM5220D, EPA 410.4, SM5210B, SM5310C, SM4500CL-D, EPA 1664, SM14 510AC, EPA 420.1, SM4500-CN-CE, SM2540D.**
EPA 624: Volatile Halocarbons & Aromatics,
EPA 608: Chlordane, Toxaphene, Aldrin, alpha-BHC, beta-BHC, gamma-BHC, delta-BHC, Dieldrin, DDD, DDE, DDT, Endosulfan I, Endosulfan II, Endosulfan sulfate, Endrin, Endrin Aldehyde, Heptachlor, Heptachlor Epoxide, PCBs
EPA 625: SVOC (Acid/Base/Neutral Extractables), **EPA 600/4-81-045**: PCB-Oil.
Microbiology: **SM9223B-Colilert-QT; Enterolert-QT, SM9222D-MF**.

For a complete listing of analytes and methods, please contact your Alpha Project Manager.

ALPHA ANALYTICAL

NEW YORK CHAIN OF CUSTODY

Westborough, MA 01581
8 Walkup Dr.
TEL: 508-898-9220
FAX: 508-898-9193

Mansfield, MA 02048
320 Forbes Blvd
TEL: 508-822-9300
FAX: 508-822-3288

Service Centers
Mahwah, NJ 07430: 35 Whitney Rd, Suite 5
Albany, NY 12205: 14 Walker Way
Tonawanda, NY 14150: 275 Cooper Ave, Suite 105

Page 2 of 2

Date Rec'd in Lab

ALPHA Job # L1428320

Project Information

Project Name: McGuinness Boulevard
Project Location: 209-235 McGuinness Blvd
Project # 29345.00
(Use Project name as Project #) ☐
Project Manager: Steve Kaplan
ALPHAQuote #:

Turn-Around Time

Standard ☑ Due Date:
Rush (only if pre approved) ☐ # of Days:

Client Information

Client: VHB
Address: 100 Motor Pkwy
Suite 135, Hauppauge, NY
Phone: 631-787 3400
Fax:
Email: Skaplan@vhb.com

Deliverables

☐ ASP-A ☐ ASP-B
☐ EQuIS (1 File) ☐ EQuIS (4 File)
☐ Other

Regulatory Requirement

☐ NY TOGS ☐ NY Part 375
☐ AWQ Standards ☐ NY CP-51
☐ NY Restricted Use ☐ Other
☐ NY Unrestricted Use
☐ NYC Sewer Discharge

Billing Information

☑ Same as Client Info
PO #

Disposal Site Information

Please identify below location of applicable disposal facilities.
Disposal Facility:
☐ NJ ☐ NY
☐ Other:

These samples have been previously analyzed by Alpha ☐

Other project specific requirements/comments:

Please specify Metals or TAL.

Sample Filtration
☐ Done
☐ Lab to do
Preservation
☐ Lab to do
(Please Specify below)

ALPHA Lab ID (Lab Use Only)	Sample ID	Collection Date	Collection Time	Sample Matrix	Sampler's Initials	TCL VOC	TCL SVOC	TAL Metals	PCB	Pesticides	TO-15 VOCs	Helium		Sample Specific Comments	Total Bottles
	VHB SB-2 (0-2')	11-20-14		Soil	ALW	X	X	X	X	X					
	VHB SB-2 (14-16')	11-20-14		Soil	ALW	X	X	X	X	X					
8320-01	VHB SV-1	11-20-14		SV	ALW						X	X			

Preservative Code:
A = None
B = HCl
C = HNO_3
D = H_2SO_4
E = NaOH
F = MeOH
G = $NaHSO_4$
H = $Na_2S_2O_3$
K/E = Zn Ac/NaOH
O = Other

Container Code
P = Plastic
A = Amber Glass
V = Vial
G = Glass
B = Bacteria Cup
C = Cube
O = Other
E = Encore
D = BOD Bottle

Westboro: Certification No: MA935
Mansfield: Certification No: MA015

Container Type
Preservative

Relinquished By:	Date/Time	Received By:	Date/Time
[signature] ALW	11-21-14 1220	[signature] AAL	11-21-14 1220
[signature]	11-21-14 1900	Tom Tatler	11-21-14 1900
Tom Tatler	11-22-14 0110	[signature]	11/22/14 0110

Please print clearly, legibly and completely. Samples can not be logged in and turnaround time clock will not start until any ambiguities are resolved. BY EXECUTING THIS COC, THE CLIENT HAS READ AND AGREES TO BE BOUND BY ALPHA'S TERMS & CONDITIONS. (See reverse side.)

Form No: 01-25 HC (rev. 30-Sept-2013)

AIR ANALYSIS

PAGE 1 OF 1

CHAIN OF CUSTODY

320 Forbes Blvd, Mansfield, MA 02048
TEL: 508-822-9300 FAX: 508-822-3288

Date Rec'd in Lab:

ALPHA Job #:

Client Information

Client: VHB

Address: 100 Motor Parkway, Suite 135

Hauppauge, NY 11788

Phone: 631-787-3400

Fax: 631-813-2545

Email: skaplan@vhb.com

Project Information

Project Name: McGuinness Boulevard

Project Location: 209-235 McGuinness Blvd

Project #: 29345.00

Project Manager: Steve Kaplan

ALPHA Quote #:

Turn-Around-Time

☒ Standard ☐ Rush (only confirmed if pre-approved)

Date Due: Time:

Report/Data Deliverables Information

☐ FAX ☐ EMAIL

☐ ADEx ☐ Add'l Deliverables

Billing Information

☐ Same as Client info PO #:

Regulatory Requirements/Report Limits

State/Fed	*Program*	*Criteria*

☐ These samples have been Previously analyzed by Alpha

Other Project Specific Requirements/Comments:

Analysis

All Columns Below Must Be Filled Out

Alpha Lab Use Only	Sample ID	Collection Date	Collection Start Time	Collection End Time	Collection Initial Vac	Collection Final Vac	Sample Matrix*	Sampler Initials	Can Size	ID Can	ID Flow Controller	TO-14A by TO-15	TO-15	TO-15 SIM	APH	FIXED GASES	TO-13A	TO-4 / TO-10	Sample Specific Comments (i.e. PID)
	VHB SV-1	11-20-14	2:21	4:25	-28.71	-2.55	SV	ALW				☐	☒	☐	☐	☐	☐	☐	
												☐	☐	☐	☐	☐	☐	☐	
												☐	☐	☐	☐	☐	☐	☐	
												☐	☐	☐	☐	☐	☐	☐	
												☐	☐	☐	☐	☐	☐	☐	
												☐	☐	☐	☐	☐	☐	☐	
											Container Type	-	-	-	-	-	-	-	

***SAMPLE MATRIX CODES:**

AA = Ambient Air (Indoor/Outdoor)
SV = Soil Vapor/Landfill Gas/SVE
Other = Please Specify

Relinquished By	Date/Time	Received By:	Date/Time

Please print clearly & legibly and completely. Samples can not be logged in and turn around time clock will not start until any ambiguities are resolved. All samples submitted are subject to Alpha's Payment Terms.

Form 101-02 (I)
Revised 29-Dec-09

Project Name: MCGUINNESS BOULEVARD
Project Number: Not Specified

Lab Number: L1428173
Report Date: 12/02/14

Alpha Sample ID	Client ID	Matrix	Sample Location	Collection Date/Time	Receive Date
L1428173-01	VHB SB-4 (0-2')	SOIL	209-235 MCGUINESS BLVD.	11/20/14 10:00	11/21/14
L1428173-02	VHB SB-4 (14-16')	SOIL	209-235 MCGUINESS BLVD.	11/20/14 10:25	11/21/14
L1428173-03	VHB SB-1 (0-2')	SOIL	209-235 MCGUINESS BLVD.	11/20/14 11:15	11/21/14
L1428173-04	VHB SB-1 (14-16')	SOIL	209-235 MCGUINESS BLVD.	11/20/14 11:40	11/21/14
L1428173-05	VHB SB-1 (8-10')	SOIL	209-235 MCGUINESS BLVD.	11/20/14 11:45	11/21/14
L1428173-06	VHB SB-5 (0-2')	SOIL	209-235 MCGUINESS BLVD.	11/20/14 13:20	11/21/14
L1428173-07	VHB SB-5 (14-16')	SOIL	209-235 MCGUINESS BLVD.	11/20/14 13:45	11/21/14
L1428173-08	VHB GW-1	WATER	209-235 MCGUINESS BLVD.	11/20/14 13:50	11/21/14
L1428173-09	VHB SB-3 (0-2')	SOIL	209-235 MCGUINESS BLVD.	11/20/14 14:40	11/21/14
L1428173-10	VHB SB-3 (14-16')	SOIL	209-235 MCGUINESS BLVD.	11/20/14 14:55	11/21/14
L1428173-11	VHB SB-2 (0-2')	SOIL	209-235 MCGUINESS BLVD.	11/20/14 15:20	11/21/14
L1428173-12	VHB SB-2 (14-16')	SOIL	209-235 MCGUINESS BLVD.	11/20/14 15:40	11/21/14

Project Name:	MCGUINNESS BOULEVARD	**Lab Number:**	L1428173
Project Number:	Not Specified	**Report Date:**	12/02/14

Case Narrative

The samples were received in accordance with the Chain of Custody and no significant deviations were encountered during the preparation or analysis unless otherwise noted. Sample Receipt, Container Information, and the Chain of Custody are located at the back of the report.

Results contained within this report relate only to the samples submitted under this Alpha Lab Number and meet all of the requirements of NELAC, for all NELAC accredited parameters. The data presented in this report is organized by parameter (i.e. VOC, SVOC, etc.). Sample specific Quality Control data (i.e. Surrogate Spike Recovery) is reported at the end of the target analyte list for each individual sample, followed by the Laboratory Batch Quality Control at the end of each parameter. If a sample was re-analyzed or re-extracted due to a required quality control corrective action and if both sets of data are reported, the Laboratory ID of the re-analysis or re-extraction is designated with an "R" or "RE", respectively. When multiple Batch Quality Control elements are reported (e.g. more than one LCS), the associated samples for each element are noted in the grey shaded header line of each data table. Any Laboratory Batch, Sample Specific % recovery or RPD value that is outside the listed Acceptance Criteria is bolded in the report. All specific QC information is also incorporated in the Data Usability format of our Data Merger tool where it can be reviewed along with any associated usability implications. Soil/sediments, solids and tissues are reported on a dry weight basis unless otherwise noted. Definitions of all data qualifiers and acronyms used in this report are provided in the Glossary located at the back of the report.

In reference to questions H (CAM) or 4 (RCP) when "NO" is checked, the performance criteria for CAM and RCP methods allow for some quality control failures to occur and still be within method compliance. In these instances the specific failure is not narrated but noted in the associated QC table. The information is also incorporated in the Data Usability format of our Data Merger tool where it can be reviewed along with any associated usability implications.

Please see the associated ADEx data file for a comparison of laboratory reporting limits that were achieved with the regulatory Numerical Standards requested on the Chain of Custody.

HOLD POLICY
For samples submitted on hold, Alpha's policy is to hold samples (with the exception of Air canisters) free of charge for 21 calendar days from the date the project is completed. After 21 calendar days, we will dispose of all samples submitted including those put on hold unless you have contacted your Client Service Representative and made arrangements for Alpha to continue to hold the samples. Air canisters will be disposed after 3 business days from the date the project is completed.

Please contact Client Services at 800-624-9220 with any questions.

Project Name:	MCGUINNESS BOULEVARD	**Lab Number:**	L1428173
Project Number:	Not Specified	**Report Date:**	12/02/14

Case Narrative (continued)

Report Submission

All non-detect (ND) or estimated concentrations (J-qualified) have been quantitated to the limit noted in the MDL column.

Volatile Organics

L1428173-03: The internal standard (IS) responses for chlorobenzene-d5 (35%) and 1,4-dichlorobenzene-d4 (12%), and the surrogate recovery for toluene-d8 (155%) are outside the acceptance criteria; however, re-analysis achieved similar results: chlorobenzene-d5 (38%), 1,4-dichlorobenzene-d4 (15%), toluene-d8 (147%), and 4-bromofluorobenzene (132%). The results of both analyses are reported.

L1428173-05 has elevated detection limits due to the dilution required by the elevated concentrations of non-target compounds in the sample.

Semivolatile Organics

The surrogate recovery for L1428173-06 is below the acceptance criteria for 2-fluorophenol (3%); however, re-extraction achieved a similar result: 2-fluorophenol (5%). The results of both extractions are reported.

Pesticides

L1428173-05 has elevated detection limits due to the dilution required by the sample matrix.

Metals

L1428173-01 through -07 and -09 through -12 have elevated detection limits for all elements, with the exception of mercury, due to the dilutions required by matrix interferences encountered during analysis.

The WG742947-4 MS recovery, performed on L1428173-01, is outside the acceptance criteria for mercury (186%). A post digestion spike was performed and was within acceptance criteria.

The WG743496-4 MS recoveries for aluminum (337%), iron (1120%), lead (0%), and manganese (45%), performed on L1428173-01, do not apply because the sample concentrations are greater than four times the spike amounts added.

The WG743496-4 MS recoveries, performed on L1428173-01, are outside the acceptance criteria for barium

Project Name:	MCGUINNESS BOULEVARD	**Lab Number:**	L1428173
Project Number:	Not Specified	**Report Date:**	12/02/14

Case Narrative (continued)

(62%), copper (72%), and zinc (67%). A post digestion spike was performed and yielded unacceptable recoveries for barium (77%) and copper (79%); zinc was within acceptance criteria. This has been attributed to sample matrix.

The WG742947-3 Laboratory Duplicate RPD, performed on L1428173-01, is outside the acceptance criteria for mercury (31%). The elevated RPD has been attributed to the non-homogeneous nature of the sample utilized for the laboratory duplicate.

Dissolved Metals

L1428173-08 has elevated detection limits for all elements, with the exception of mercury, due to the dilution required by matrix interferences encountered during analysis.

The WG744093-4 MS recoveries, performed on L1428173-08, are outside the acceptance criteria for cadmium (132%), iron (131%), manganese (149%), magnesium (0%), and potassium (54%). A post digestion spike was performed and yielded unacceptable recoveries for manganese (154%), magnesium (130%), and potassium (127%); all other compounds were within acceptance criteria. This has been attributed to sample matrix.

The WG744093-4 MS recovery for calcium (320%) performed on L1428173-08, does not apply because the sample concentration is greater than four times the spike amount added.

I, the undersigned, attest under the pains and penalties of perjury that, to the best of my knowledge and belief and based upon my personal inquiry of those responsible for providing the information contained in this analytical report, such information is accurate and complete. This certificate of analysis is not complete unless this page accompanies any and all pages of this report.

Authorized Signature: Kelly Stenstrom

Title: Technical Director/Representative Date: 12/02/14

ORGANICS

VOLATILES

Project Name: MCGUINNESS BOULEVARD **Lab Number:** L1428173

Project Number: Not Specified **Report Date:** 12/02/14

SAMPLE RESULTS

Lab ID:	L1428173-01	Date Collected:	11/20/14 10:00
Client ID:	VHB SB-4 (0-2')	Date Received:	11/21/14
Sample Location:	209-235 MCGUINESS BLVD.	Field Prep:	Not Specified
Matrix:	Soil		
Analytical Method:	1,8260C		
Analytical Date:	11/25/14 10:12		
Analyst:	BN		
Percent Solids:	86%		

Parameter	Result	Qualifier	Units	RL	MDL	Dilution Factor
Volatile Organics by 8260/5035 - Westborough Lab						
Methylene chloride	ND		ug/kg	10	1.2	1
1,1-Dichloroethane	ND		ug/kg	1.6	0.09	1
Chloroform	ND		ug/kg	1.6	0.39	1
Carbon tetrachloride	ND		ug/kg	1.0	0.22	1
1,2-Dichloropropane	ND		ug/kg	3.7	0.24	1
Dibromochloromethane	ND		ug/kg	1.0	0.16	1
1,1,2-Trichloroethane	ND		ug/kg	1.6	0.32	1
Tetrachloroethene	ND		ug/kg	1.0	0.15	1
Chlorobenzene	ND		ug/kg	1.0	0.37	1
Trichlorofluoromethane	ND		ug/kg	5.3	0.41	1
1,2-Dichloroethane	ND		ug/kg	1.0	0.12	1
1,1,1-Trichloroethane	ND		ug/kg	1.0	0.12	1
Bromodichloromethane	ND		ug/kg	1.0	0.18	1
trans-1,3-Dichloropropene	ND		ug/kg	1.0	0.13	1
cis-1,3-Dichloropropene	ND		ug/kg	1.0	0.12	1
1,3-Dichloropropene, Total	ND		ug/kg	1.0	0.12	1
1,1-Dichloropropene	ND		ug/kg	5.3	0.15	1
Bromoform	ND		ug/kg	4.2	0.25	1
1,1,2,2-Tetrachloroethane	ND		ug/kg	1.0	0.11	1
Benzene	ND		ug/kg	1.0	0.12	1
Toluene	0.40	J	ug/kg	1.6	0.20	1
Ethylbenzene	ND		ug/kg	1.0	0.13	1
Chloromethane	ND		ug/kg	5.3	0.31	1
Bromomethane	ND		ug/kg	2.1	0.36	1
Vinyl chloride	ND		ug/kg	2.1	0.12	1
Chloroethane	ND		ug/kg	2.1	0.33	1
1,1-Dichloroethene	ND		ug/kg	1.0	0.28	1
trans-1,2-Dichloroethene	ND		ug/kg	1.6	0.22	1
Trichloroethene	ND		ug/kg	1.0	0.13	1
1,2-Dichlorobenzene	ND		ug/kg	5.3	0.16	1

Project Name: MCGUINNESS BOULEVARD **Lab Number:** L1428173

Project Number: Not Specified **Report Date:** 12/02/14

SAMPLE RESULTS

Lab ID: L1428173-01 Date Collected: 11/20/14 10:00

Client ID: VHB SB-4 (0-2') Date Received: 11/21/14

Sample Location: 209-235 MCGUINESS BLVD. Field Prep: Not Specified

Parameter	Result	Qualifier	Units	RL	MDL	Dilution Factor
Volatile Organics by 8260/5035 - Westborough Lab						
1,3-Dichlorobenzene	ND		ug/kg	5.3	0.14	1
1,4-Dichlorobenzene	ND		ug/kg	5.3	0.14	1
Methyl tert butyl ether	ND		ug/kg	2.1	0.09	1
p/m-Xylene	ND		ug/kg	2.1	0.21	1
o-Xylene	ND		ug/kg	2.1	0.18	1
Xylene (Total)	ND		ug/kg	2.1	0.18	1
cis-1,2-Dichloroethene	ND		ug/kg	1.0	0.15	1
1,2-Dichloroethene (total)	ND		ug/kg	1.0	0.15	1
Dibromomethane	ND		ug/kg	10	0.17	1
Styrene	ND		ug/kg	2.1	0.42	1
Dichlorodifluoromethane	ND		ug/kg	10	0.20	1
Acetone	ND		ug/kg	10	1.1	1
Carbon disulfide	ND		ug/kg	10	1.2	1
2-Butanone	ND		ug/kg	10	0.29	1
Vinyl acetate	ND		ug/kg	10	0.14	1
4-Methyl-2-pentanone	ND		ug/kg	10	0.26	1
1,2,3-Trichloropropane	ND		ug/kg	10	0.17	1
2-Hexanone	ND		ug/kg	10	0.70	1
Bromochloromethane	ND		ug/kg	5.3	0.29	1
2,2-Dichloropropane	ND		ug/kg	5.3	0.24	1
1,2-Dibromoethane	ND		ug/kg	4.2	0.18	1
1,3-Dichloropropane	ND		ug/kg	5.3	0.15	1
1,1,1,2-Tetrachloroethane	ND		ug/kg	1.0	0.33	1
Bromobenzene	ND		ug/kg	5.3	0.22	1
n-Butylbenzene	ND		ug/kg	1.0	0.12	1
sec-Butylbenzene	ND		ug/kg	1.0	0.13	1
tert-Butylbenzene	ND		ug/kg	5.3	0.14	1
o-Chlorotoluene	ND		ug/kg	5.3	0.17	1
p-Chlorotoluene	ND		ug/kg	5.3	0.14	1
1,2-Dibromo-3-chloropropane	ND		ug/kg	5.3	0.42	1
Hexachlorobutadiene	ND		ug/kg	5.3	0.24	1
Isopropylbenzene	ND		ug/kg	1.0	0.11	1
p-Isopropyltoluene	ND		ug/kg	1.0	0.13	1
Naphthalene	0.43	J	ug/kg	5.3	0.14	1
Acrylonitrile	ND		ug/kg	10	0.54	1
n-Propylbenzene	ND		ug/kg	1.0	0.12	1
1,2,3-Trichlorobenzene	ND		ug/kg	5.3	0.16	1
1,2,4-Trichlorobenzene	ND		ug/kg	5.3	0.19	1
1,3,5-Trimethylbenzene	ND		ug/kg	5.3	0.15	1

Project Name: MCGUINNESS BOULEVARD **Lab Number:** L1428173

Project Number: Not Specified **Report Date:** 12/02/14

SAMPLE RESULTS

Lab ID: L1428173-01 Date Collected: 11/20/14 10:00

Client ID: VHB SB-4 (0-2') Date Received: 11/21/14

Sample Location: 209-235 MCGUINESS BLVD. Field Prep: Not Specified

Parameter	Result	Qualifier	Units	RL	MDL	Dilution Factor
Volatile Organics by 8260/5035 - Westborough Lab						
1,2,4-Trimethylbenzene	ND		ug/kg	5.3	0.15	1
1,4-Dioxane	ND		ug/kg	100	15.	1
1,4-Diethylbenzene	ND		ug/kg	4.2	0.17	1
4-Ethyltoluene	ND		ug/kg	4.2	0.13	1
1,2,4,5-Tetramethylbenzene	ND		ug/kg	4.2	0.14	1
Ethyl ether	ND		ug/kg	5.3	0.27	1
trans-1,4-Dichloro-2-butene	ND		ug/kg	5.3	0.41	1

Surrogate	% Recovery	Qualifier	Acceptance Criteria
1,2-Dichloroethane-d4	105		70-130
Toluene-d8	107		70-130
4-Bromofluorobenzene	110		70-130
Dibromofluoromethane	99		70-130

Project Name: MCGUINNESS BOULEVARD **Lab Number:** L1428173

Project Number: Not Specified **Report Date:** 12/02/14

SAMPLE RESULTS

Lab ID:	L1428173-02	Date Collected:	11/20/14 10:25
Client ID:	VHB SB-4 (14-16')	Date Received:	11/21/14
Sample Location:	209-235 MCGUINESS BLVD.	Field Prep:	Not Specified
Matrix:	Soil		
Analytical Method:	1,8260C		
Analytical Date:	11/24/14 14:24		
Analyst:	BN		
Percent Solids:	85%		

Parameter	Result	Qualifier	Units	RL	MDL	Dilution Factor
Volatile Organics by 8260/5035 - Westborough Lab						
Methylene chloride	ND		ug/kg	25	2.7	1
1,1-Dichloroethane	ND		ug/kg	3.7	0.21	1
Chloroform	ND		ug/kg	3.7	0.91	1
Carbon tetrachloride	ND		ug/kg	2.5	0.52	1
1,2-Dichloropropane	ND		ug/kg	8.6	0.56	1
Dibromochloromethane	ND		ug/kg	2.5	0.38	1
1,1,2-Trichloroethane	ND		ug/kg	3.7	0.75	1
Tetrachloroethene	ND		ug/kg	2.5	0.34	1
Chlorobenzene	ND		ug/kg	2.5	0.86	1
Trichlorofluoromethane	ND		ug/kg	12	0.96	1
1,2-Dichloroethane	ND		ug/kg	2.5	0.28	1
1,1,1-Trichloroethane	ND		ug/kg	2.5	0.27	1
Bromodichloromethane	ND		ug/kg	2.5	0.43	1
trans-1,3-Dichloropropene	ND		ug/kg	2.5	0.30	1
cis-1,3-Dichloropropene	ND		ug/kg	2.5	0.29	1
1,3-Dichloropropene, Total	ND		ug/kg	2.5	0.29	1
1,1-Dichloropropene	ND		ug/kg	12	0.35	1
Bromoform	ND		ug/kg	9.8	0.58	1
1,1,2,2-Tetrachloroethane	ND		ug/kg	2.5	0.25	1
Benzene	ND		ug/kg	2.5	0.29	1
Toluene	ND		ug/kg	3.7	0.48	1
Ethylbenzene	ND		ug/kg	2.5	0.31	1
Chloromethane	ND		ug/kg	12	0.72	1
Bromomethane	2.5	J	ug/kg	4.9	0.83	1
Vinyl chloride	ND		ug/kg	4.9	0.29	1
Chloroethane	ND		ug/kg	4.9	0.78	1
1,1-Dichloroethene	ND		ug/kg	2.5	0.64	1
trans-1,2-Dichloroethene	ND		ug/kg	3.7	0.52	1
Trichloroethene	ND		ug/kg	2.5	0.31	1
1,2-Dichlorobenzene	ND		ug/kg	12	0.38	1

Project Name: MCGUINNESS BOULEVARD **Lab Number:** L1428173

Project Number: Not Specified **Report Date:** 12/02/14

SAMPLE RESULTS

Lab ID: L1428173-02 Date Collected: 11/20/14 10:25

Client ID: VHB SB-4 (14-16') Date Received: 11/21/14

Sample Location: 209-235 MCGUINESS BLVD. Field Prep: Not Specified

Parameter	Result	Qualifier	Units	RL	MDL	Dilution Factor
Volatile Organics by 8260/5035 - Westborough Lab						
1,3-Dichlorobenzene	ND		ug/kg	12	0.33	1
1,4-Dichlorobenzene	ND		ug/kg	12	0.34	1
Methyl tert butyl ether	ND		ug/kg	4.9	0.21	1
p/m-Xylene	ND		ug/kg	4.9	0.49	1
o-Xylene	ND		ug/kg	4.9	0.42	1
Xylene (Total)	ND		ug/kg	4.9	0.42	1
cis-1,2-Dichloroethene	ND		ug/kg	2.5	0.35	1
1,2-Dichloroethene (total)	ND		ug/kg	2.5	0.35	1
Dibromomethane	ND		ug/kg	25	0.40	1
Styrene	ND		ug/kg	4.9	0.99	1
Dichlorodifluoromethane	ND		ug/kg	25	0.47	1
Acetone	36		ug/kg	25	2.6	1
Carbon disulfide	ND		ug/kg	25	2.7	1
2-Butanone	ND		ug/kg	25	0.67	1
Vinyl acetate	ND		ug/kg	25	0.32	1
4-Methyl-2-pentanone	ND		ug/kg	25	0.60	1
1,2,3-Trichloropropane	ND		ug/kg	25	0.40	1
2-Hexanone	ND		ug/kg	25	1.6	1
Bromochloromethane	ND		ug/kg	12	0.68	1
2,2-Dichloropropane	ND		ug/kg	12	0.56	1
1,2-Dibromoethane	ND		ug/kg	9.8	0.43	1
1,3-Dichloropropane	ND		ug/kg	12	0.36	1
1,1,1,2-Tetrachloroethane	ND		ug/kg	2.5	0.78	1
Bromobenzene	ND		ug/kg	12	0.51	1
n-Butylbenzene	ND		ug/kg	2.5	0.28	1
sec-Butylbenzene	ND		ug/kg	2.5	0.30	1
tert-Butylbenzene	ND		ug/kg	12	0.33	1
o-Chlorotoluene	ND		ug/kg	12	0.39	1
p-Chlorotoluene	ND		ug/kg	12	0.33	1
1,2-Dibromo-3-chloropropane	ND		ug/kg	12	0.98	1
Hexachlorobutadiene	ND		ug/kg	12	0.56	1
Isopropylbenzene	ND		ug/kg	2.5	0.26	1
p-Isopropyltoluene	ND		ug/kg	2.5	0.31	1
Naphthalene	ND		ug/kg	12	0.34	1
Acrylonitrile	ND		ug/kg	25	1.3	1
n-Propylbenzene	ND		ug/kg	2.5	0.27	1
1,2,3-Trichlorobenzene	ND		ug/kg	12	0.36	1
1,2,4-Trichlorobenzene	ND		ug/kg	12	0.45	1
1,3,5-Trimethylbenzene	ND		ug/kg	12	0.35	1

Project Name: MCGUINNESS BOULEVARD **Lab Number:** L1428173

Project Number: Not Specified **Report Date:** 12/02/14

SAMPLE RESULTS

Lab ID: L1428173-02 Date Collected: 11/20/14 10:25

Client ID: VHB SB-4 (14-16') Date Received: 11/21/14

Sample Location: 209-235 MCGUINESS BLVD. Field Prep: Not Specified

Parameter	Result	Qualifier	Units	RL	MDL	Dilution Factor
Volatile Organics by 8260/5035 - Westborough Lab						
1,2,4-Trimethylbenzene	ND		ug/kg	12	0.35	1
1,4-Dioxane	ND		ug/kg	250	36.	1
1,4-Diethylbenzene	ND		ug/kg	9.8	0.39	1
4-Ethyltoluene	ND		ug/kg	9.8	0.30	1
1,2,4,5-Tetramethylbenzene	ND		ug/kg	9.8	0.32	1
Ethyl ether	ND		ug/kg	12	0.64	1
trans-1,4-Dichloro-2-butene	ND		ug/kg	12	0.96	1

Surrogate	% Recovery	Qualifier	Acceptance Criteria
1,2-Dichloroethane-d4	101		70-130
Toluene-d8	96		70-130
4-Bromofluorobenzene	95		70-130
Dibromofluoromethane	89		70-130

Project Name: MCGUINNESS BOULEVARD **Lab Number:** L1428173

Project Number: Not Specified **Report Date:** 12/02/14

SAMPLE RESULTS

Lab ID:	L1428173-03	Date Collected:	11/20/14 11:15
Client ID:	VHB SB-1 (0-2')	Date Received:	11/21/14
Sample Location:	209-235 MCGUINESS BLVD.	Field Prep:	Not Specified
Matrix:	Soil		
Analytical Method:	1,8260C		
Analytical Date:	11/25/14 10:37		
Analyst:	BN		
Percent Solids:	88%		

Parameter	Result	Qualifier	Units	RL	MDL	Dilution Factor
Volatile Organics by 8260/5035 - Westborough Lab						
Methylene chloride	ND		ug/kg	17	1.8	1
1,1-Dichloroethane	ND		ug/kg	2.5	0.14	1
Chloroform	ND		ug/kg	2.5	0.62	1
Carbon tetrachloride	ND		ug/kg	1.7	0.35	1
1,2-Dichloropropane	ND		ug/kg	5.8	0.38	1
Dibromochloromethane	ND		ug/kg	1.7	0.26	1
1,1,2-Trichloroethane	ND		ug/kg	2.5	0.50	1
Tetrachloroethene	ND		ug/kg	1.7	0.23	1
Chlorobenzene	ND		ug/kg	1.7	0.58	1
Trichlorofluoromethane	ND		ug/kg	8.3	0.64	1
1,2-Dichloroethane	ND		ug/kg	1.7	0.19	1
1,1,1-Trichloroethane	ND		ug/kg	1.7	0.18	1
Bromodichloromethane	ND		ug/kg	1.7	0.29	1
trans-1,3-Dichloropropene	ND		ug/kg	1.7	0.20	1
cis-1,3-Dichloropropene	ND		ug/kg	1.7	0.20	1
1,3-Dichloropropene, Total	ND		ug/kg	1.7	0.20	1
1,1-Dichloropropene	ND		ug/kg	8.3	0.24	1
Bromoform	ND		ug/kg	6.6	0.39	1
1,1,2,2-Tetrachloroethane	ND		ug/kg	1.7	0.17	1
Benzene	1.8		ug/kg	1.7	0.20	1
Toluene	0.78	J	ug/kg	2.5	0.32	1
Ethylbenzene	ND		ug/kg	1.7	0.21	1
Chloromethane	ND		ug/kg	8.3	0.49	1
Bromomethane	ND		ug/kg	3.3	0.56	1
Vinyl chloride	ND		ug/kg	3.3	0.20	1
Chloroethane	ND		ug/kg	3.3	0.52	1
1,1-Dichloroethene	ND		ug/kg	1.7	0.44	1
trans-1,2-Dichloroethene	ND		ug/kg	2.5	0.35	1
Trichloroethene	ND		ug/kg	1.7	0.21	1
1,2-Dichlorobenzene	ND		ug/kg	8.3	0.25	1

Project Name: MCGUINNESS BOULEVARD **Lab Number:** L1428173

Project Number: Not Specified **Report Date:** 12/02/14

SAMPLE RESULTS

Lab ID: L1428173-03 Date Collected: 11/20/14 11:15

Client ID: VHB SB-1 (0-2') Date Received: 11/21/14

Sample Location: 209-235 MCGUINESS BLVD. Field Prep: Not Specified

Parameter	Result	Qualifier	Units	RL	MDL	Dilution Factor
Volatile Organics by 8260/5035 - Westborough Lab						
1,3-Dichlorobenzene	ND		ug/kg	8.3	0.22	1
1,4-Dichlorobenzene	ND		ug/kg	8.3	0.23	1
Methyl tert butyl ether	ND		ug/kg	3.3	0.14	1
p/m-Xylene	0.41	J	ug/kg	3.3	0.33	1
o-Xylene	ND		ug/kg	3.3	0.28	1
Xylene (Total)	0.41	J	ug/kg	3.3	0.28	1
cis-1,2-Dichloroethene	ND		ug/kg	1.7	0.24	1
1,2-Dichloroethene (total)	ND		ug/kg	1.7	0.24	1
Dibromomethane	ND		ug/kg	17	0.27	1
Styrene	ND		ug/kg	3.3	0.67	1
Dichlorodifluoromethane	ND		ug/kg	17	0.32	1
Acetone	ND		ug/kg	17	1.7	1
Carbon disulfide	ND		ug/kg	17	1.8	1
2-Butanone	ND		ug/kg	17	0.45	1
Vinyl acetate	ND		ug/kg	17	0.22	1
4-Methyl-2-pentanone	ND		ug/kg	17	0.40	1
1,2,3-Trichloropropane	ND		ug/kg	17	0.27	1
2-Hexanone	ND		ug/kg	17	1.1	1
Bromochloromethane	ND		ug/kg	8.3	0.46	1
2,2-Dichloropropane	ND		ug/kg	8.3	0.38	1
1,2-Dibromoethane	ND		ug/kg	6.6	0.29	1
1,3-Dichloropropane	ND		ug/kg	8.3	0.24	1
1,1,1,2-Tetrachloroethane	ND		ug/kg	1.7	0.53	1
Bromobenzene	ND		ug/kg	8.3	0.35	1
n-Butylbenzene	ND		ug/kg	1.7	0.19	1
sec-Butylbenzene	ND		ug/kg	1.7	0.20	1
tert-Butylbenzene	ND		ug/kg	8.3	0.22	1
o-Chlorotoluene	ND		ug/kg	8.3	0.26	1
p-Chlorotoluene	ND		ug/kg	8.3	0.22	1
1,2-Dibromo-3-chloropropane	ND		ug/kg	8.3	0.66	1
Hexachlorobutadiene	ND		ug/kg	8.3	0.38	1
Isopropylbenzene	ND		ug/kg	1.7	0.17	1
p-Isopropyltoluene	ND		ug/kg	1.7	0.21	1
Naphthalene	ND		ug/kg	8.3	0.23	1
Acrylonitrile	ND		ug/kg	17	0.86	1
n-Propylbenzene	ND		ug/kg	1.7	0.18	1
1,2,3-Trichlorobenzene	ND		ug/kg	8.3	0.24	1
1,2,4-Trichlorobenzene	ND		ug/kg	8.3	0.30	1
1,3,5-Trimethylbenzene	ND		ug/kg	8.3	0.24	1

Project Name: MCGUINNESS BOULEVARD **Lab Number:** L1428173

Project Number: Not Specified **Report Date:** 12/02/14

SAMPLE RESULTS

Lab ID: L1428173-03 Date Collected: 11/20/14 11:15

Client ID: VHB SB-1 (0-2') Date Received: 11/21/14

Sample Location: 209-235 MCGUINESS BLVD. Field Prep: Not Specified

Parameter	Result	Qualifier	Units	RL	MDL	Dilution Factor
Volatile Organics by 8260/5035 - Westborough Lab						
1,2,4-Trimethylbenzene	ND		ug/kg	8.3	0.24	1
1,4-Dioxane	ND		ug/kg	170	24.	1
1,4-Diethylbenzene	ND		ug/kg	6.6	0.26	1
4-Ethyltoluene	ND		ug/kg	6.6	0.21	1
1,2,4,5-Tetramethylbenzene	ND		ug/kg	6.6	0.22	1
Ethyl ether	ND		ug/kg	8.3	0.43	1
trans-1,4-Dichloro-2-butene	ND		ug/kg	8.3	0.65	1

Surrogate	% Recovery	Qualifier	Acceptance Criteria
1,2-Dichloroethane-d4	109		70-130
Toluene-d8	**155**	Q	70-130
4-Bromofluorobenzene	129		70-130
Dibromofluoromethane	111		70-130

Project Name: MCGUINNESS BOULEVARD **Lab Number:** L1428173

Project Number: Not Specified **Report Date:** 12/02/14

SAMPLE RESULTS

Lab ID:	L1428173-03 R	Date Collected:	11/20/14 11:15
Client ID:	VHB SB-1 (0-2')	Date Received:	11/21/14
Sample Location:	209-235 MCGUINESS BLVD.	Field Prep:	Not Specified
Matrix:	Soil		
Analytical Method:	1,8260C		
Analytical Date:	11/30/14 11:06		
Analyst:	BN		
Percent Solids:	88%		

Parameter	Result	Qualifier	Units	RL	MDL	Dilution Factor
Volatile Organics by 8260/5035 - Westborough Lab						
Methylene chloride	ND		ug/kg	15	1.6	1
1,1-Dichloroethane	ND		ug/kg	2.2	0.13	1
Chloroform	ND		ug/kg	2.2	0.55	1
Carbon tetrachloride	ND		ug/kg	1.5	0.31	1
1,2-Dichloropropane	ND		ug/kg	5.2	0.34	1
Dibromochloromethane	ND		ug/kg	1.5	0.23	1
1,1,2-Trichloroethane	ND		ug/kg	2.2	0.45	1
Tetrachloroethene	1.1	J	ug/kg	1.5	0.21	1
Chlorobenzene	ND		ug/kg	1.5	0.52	1
Trichlorofluoromethane	ND		ug/kg	7.4	0.58	1
1,2-Dichloroethane	ND		ug/kg	1.5	0.17	1
1,1,1-Trichloroethane	ND		ug/kg	1.5	0.16	1
Bromodichloromethane	ND		ug/kg	1.5	0.26	1
trans-1,3-Dichloropropene	ND		ug/kg	1.5	0.18	1
cis-1,3-Dichloropropene	ND		ug/kg	1.5	0.18	1
1,3-Dichloropropene, Total	ND		ug/kg	1.5	0.18	1
1,1-Dichloropropene	ND		ug/kg	7.4	0.21	1
Bromoform	ND		ug/kg	6.0	0.35	1
1,1,2,2-Tetrachloroethane	ND		ug/kg	1.5	0.15	1
Benzene	1.2	J	ug/kg	1.5	0.18	1
Toluene	0.63	J	ug/kg	2.2	0.29	1
Ethylbenzene	ND		ug/kg	1.5	0.19	1
Chloromethane	ND		ug/kg	7.4	0.44	1
Bromomethane	ND		ug/kg	3.0	0.50	1
Vinyl chloride	ND		ug/kg	3.0	0.17	1
Chloroethane	ND		ug/kg	3.0	0.47	1
1,1-Dichloroethene	ND		ug/kg	1.5	0.39	1
trans-1,2-Dichloroethene	ND		ug/kg	2.2	0.32	1
Trichloroethene	ND		ug/kg	1.5	0.19	1
1,2-Dichlorobenzene	ND		ug/kg	7.4	0.23	1

Project Name: MCGUINNESS BOULEVARD **Lab Number:** L1428173

Project Number: Not Specified **Report Date:** 12/02/14

SAMPLE RESULTS

Lab ID: L1428173-03 R Date Collected: 11/20/14 11:15

Client ID: VHB SB-1 (0-2') Date Received: 11/21/14

Sample Location: 209-235 MCGUINESS BLVD. Field Prep: Not Specified

Parameter	Result	Qualifier	Units	RL	MDL	Dilution Factor
Volatile Organics by 8260/5035 - Westborough Lab						
1,3-Dichlorobenzene	ND		ug/kg	7.4	0.20	1
1,4-Dichlorobenzene	ND		ug/kg	7.4	0.21	1
Methyl tert butyl ether	ND		ug/kg	3.0	0.12	1
p/m-Xylene	0.53	J	ug/kg	3.0	0.29	1
o-Xylene	ND		ug/kg	3.0	0.26	1
Xylene (Total)	0.53	J	ug/kg	3.0	0.26	1
cis-1,2-Dichloroethene	ND		ug/kg	1.5	0.21	1
1,2-Dichloroethene (total)	ND		ug/kg	1.5	0.21	1
Dibromomethane	ND		ug/kg	15	0.24	1
Styrene	ND		ug/kg	3.0	0.60	1
Dichlorodifluoromethane	ND		ug/kg	15	0.28	1
Acetone	ND		ug/kg	15	1.5	1
Carbon disulfide	ND		ug/kg	15	1.6	1
2-Butanone	ND		ug/kg	15	0.40	1
Vinyl acetate	ND		ug/kg	15	0.20	1
4-Methyl-2-pentanone	ND		ug/kg	15	0.36	1
1,2,3-Trichloropropane	ND		ug/kg	15	0.24	1
2-Hexanone	ND		ug/kg	15	0.99	1
Bromochloromethane	ND		ug/kg	7.4	0.41	1
2,2-Dichloropropane	ND		ug/kg	7.4	0.34	1
1,2-Dibromoethane	ND		ug/kg	6.0	0.26	1
1,3-Dichloropropane	ND		ug/kg	7.4	0.22	1
1,1,1,2-Tetrachloroethane	ND		ug/kg	1.5	0.47	1
Bromobenzene	ND		ug/kg	7.4	0.31	1
n-Butylbenzene	ND		ug/kg	1.5	0.17	1
sec-Butylbenzene	ND		ug/kg	1.5	0.18	1
tert-Butylbenzene	ND		ug/kg	7.4	0.20	1
o-Chlorotoluene	ND		ug/kg	7.4	0.24	1
p-Chlorotoluene	ND		ug/kg	7.4	0.20	1
1,2-Dibromo-3-chloropropane	ND		ug/kg	7.4	0.59	1
Hexachlorobutadiene	ND		ug/kg	7.4	0.34	1
Isopropylbenzene	ND		ug/kg	1.5	0.15	1
p-Isopropyltoluene	ND		ug/kg	1.5	0.19	1
Naphthalene	0.59	J	ug/kg	7.4	0.21	1
Acrylonitrile	ND		ug/kg	15	0.76	1
n-Propylbenzene	ND		ug/kg	1.5	0.16	1
1,2,3-Trichlorobenzene	ND		ug/kg	7.4	0.22	1
1,2,4-Trichlorobenzene	ND		ug/kg	7.4	0.27	1
1,3,5-Trimethylbenzene	ND		ug/kg	7.4	0.21	1

Project Name: MCGUINNESS BOULEVARD **Lab Number:** L1428173

Project Number: Not Specified **Report Date:** 12/02/14

SAMPLE RESULTS

Lab ID: L1428173-03 R Date Collected: 11/20/14 11:15

Client ID: VHB SB-1 (0-2') Date Received: 11/21/14

Sample Location: 209-235 MCGUINESS BLVD. Field Prep: Not Specified

Parameter	Result	Qualifier	Units	RL	MDL	Dilution Factor
Volatile Organics by 8260/5035 - Westborough Lab						
1,2,4-Trimethylbenzene	ND		ug/kg	7.4	0.21	1
1,4-Dioxane	ND		ug/kg	150	21.	1
1,4-Diethylbenzene	ND		ug/kg	6.0	0.24	1
4-Ethyltoluene	ND		ug/kg	6.0	0.18	1
1,2,4,5-Tetramethylbenzene	ND		ug/kg	6.0	0.19	1
Ethyl ether	ND		ug/kg	7.4	0.39	1
trans-1,4-Dichloro-2-butene	ND		ug/kg	7.4	0.58	1

Surrogate	% Recovery	Qualifier	Acceptance Criteria
1,2-Dichloroethane-d4	119		70-130
Toluene-d8	**147**	Q	70-130
4-Bromofluorobenzene	**132**	Q	70-130
Dibromofluoromethane	119		70-130

Project Name: MCGUINNESS BOULEVARD **Lab Number:** L1428173

Project Number: Not Specified **Report Date:** 12/02/14

SAMPLE RESULTS

Lab ID:	L1428173-04	Date Collected:	11/20/14 11:40
Client ID:	VHB SB-1 (14-16')	Date Received:	11/21/14
Sample Location:	209-235 MCGUINESS BLVD.	Field Prep:	Not Specified
Matrix:	Soil		
Analytical Method:	1,8260C		
Analytical Date:	11/25/14 11:03		
Analyst:	BN		
Percent Solids:	86%		

Parameter	Result	Qualifier	Units	RL	MDL	Dilution Factor
Volatile Organics by 8260/5035 - Westborough Lab						
Methylene chloride	ND		ug/kg	10	1.1	1
1,1-Dichloroethane	ND		ug/kg	1.5	0.09	1
Chloroform	ND		ug/kg	1.5	0.37	1
Carbon tetrachloride	ND		ug/kg	1.0	0.21	1
1,2-Dichloropropane	ND		ug/kg	3.5	0.23	1
Dibromochloromethane	ND		ug/kg	1.0	0.15	1
1,1,2-Trichloroethane	ND		ug/kg	1.5	0.30	1
Tetrachloroethene	ND		ug/kg	1.0	0.14	1
Chlorobenzene	ND		ug/kg	1.0	0.35	1
Trichlorofluoromethane	ND		ug/kg	5.0	0.39	1
1,2-Dichloroethane	ND		ug/kg	1.0	0.11	1
1,1,1-Trichloroethane	ND		ug/kg	1.0	0.11	1
Bromodichloromethane	ND		ug/kg	1.0	0.17	1
trans-1,3-Dichloropropene	ND		ug/kg	1.0	0.12	1
cis-1,3-Dichloropropene	ND		ug/kg	1.0	0.12	1
1,3-Dichloropropene, Total	ND		ug/kg	1.0	0.12	1
1,1-Dichloropropene	ND		ug/kg	5.0	0.14	1
Bromoform	ND		ug/kg	4.0	0.24	1
1,1,2,2-Tetrachloroethane	ND		ug/kg	1.0	0.10	1
Benzene	ND		ug/kg	1.0	0.12	1
Toluene	0.29	J	ug/kg	1.5	0.19	1
Ethylbenzene	ND		ug/kg	1.0	0.13	1
Chloromethane	ND		ug/kg	5.0	0.29	1
Bromomethane	ND		ug/kg	2.0	0.34	1
Vinyl chloride	ND		ug/kg	2.0	0.12	1
Chloroethane	ND		ug/kg	2.0	0.32	1
1,1-Dichloroethene	ND		ug/kg	1.0	0.26	1
trans-1,2-Dichloroethene	ND		ug/kg	1.5	0.21	1
Trichloroethene	ND		ug/kg	1.0	0.12	1
1,2-Dichlorobenzene	ND		ug/kg	5.0	0.15	1

Project Name: MCGUINNESS BOULEVARD **Lab Number:** L1428173

Project Number: Not Specified **Report Date:** 12/02/14

SAMPLE RESULTS

Lab ID: L1428173-04 Date Collected: 11/20/14 11:40

Client ID: VHB SB-1 (14-16') Date Received: 11/21/14

Sample Location: 209-235 MCGUINESS BLVD. Field Prep: Not Specified

Parameter	Result	Qualifier	Units	RL	MDL	Dilution Factor
Volatile Organics by 8260/5035 - Westborough Lab						
1,3-Dichlorobenzene	ND		ug/kg	5.0	0.13	1
1,4-Dichlorobenzene	0.26	J	ug/kg	5.0	0.14	1
Methyl tert butyl ether	ND		ug/kg	2.0	0.08	1
p/m-Xylene	ND		ug/kg	2.0	0.20	1
o-Xylene	ND		ug/kg	2.0	0.17	1
Xylene (Total)	ND		ug/kg	2.0	0.17	1
cis-1,2-Dichloroethene	ND		ug/kg	1.0	0.14	1
1,2-Dichloroethene (total)	ND		ug/kg	1.0	0.14	1
Dibromomethane	ND		ug/kg	10	0.16	1
Styrene	ND		ug/kg	2.0	0.40	1
Dichlorodifluoromethane	ND		ug/kg	10	0.19	1
Acetone	33		ug/kg	10	1.0	1
Carbon disulfide	ND		ug/kg	10	1.1	1
2-Butanone	2.5	J	ug/kg	10	0.27	1
Vinyl acetate	ND		ug/kg	10	0.13	1
4-Methyl-2-pentanone	ND		ug/kg	10	0.24	1
1,2,3-Trichloropropane	ND		ug/kg	10	0.16	1
2-Hexanone	ND		ug/kg	10	0.66	1
Bromochloromethane	ND		ug/kg	5.0	0.28	1
2,2-Dichloropropane	ND		ug/kg	5.0	0.22	1
1,2-Dibromoethane	ND		ug/kg	4.0	0.17	1
1,3-Dichloropropane	ND		ug/kg	5.0	0.14	1
1,1,1,2-Tetrachloroethane	ND		ug/kg	1.0	0.32	1
Bromobenzene	ND		ug/kg	5.0	0.21	1
n-Butylbenzene	1.1		ug/kg	1.0	0.11	1
sec-Butylbenzene	0.98	J	ug/kg	1.0	0.12	1
tert-Butylbenzene	ND		ug/kg	5.0	0.14	1
o-Chlorotoluene	ND		ug/kg	5.0	0.16	1
p-Chlorotoluene	ND		ug/kg	5.0	0.13	1
1,2-Dibromo-3-chloropropane	ND		ug/kg	5.0	0.40	1
Hexachlorobutadiene	ND		ug/kg	5.0	0.23	1
Isopropylbenzene	0.83	J	ug/kg	1.0	0.10	1
p-Isopropyltoluene	ND		ug/kg	1.0	0.12	1
Naphthalene	0.32	J	ug/kg	5.0	0.14	1
Acrylonitrile	ND		ug/kg	10	0.51	1
n-Propylbenzene	0.84	J	ug/kg	1.0	0.11	1
1,2,3-Trichlorobenzene	ND		ug/kg	5.0	0.15	1
1,2,4-Trichlorobenzene	ND		ug/kg	5.0	0.18	1
1,3,5-Trimethylbenzene	ND		ug/kg	5.0	0.14	1

Project Name: MCGUINNESS BOULEVARD **Lab Number:** L1428173

Project Number: Not Specified **Report Date:** 12/02/14

SAMPLE RESULTS

Lab ID: L1428173-04 Date Collected: 11/20/14 11:40

Client ID: VHB SB-1 (14-16') Date Received: 11/21/14

Sample Location: 209-235 MCGUINESS BLVD. Field Prep: Not Specified

Parameter	Result	Qualifier	Units	RL	MDL	Dilution Factor
Volatile Organics by 8260/5035 - Westborough Lab						
1,2,4-Trimethylbenzene	ND		ug/kg	5.0	0.14	1
1,4-Dioxane	ND		ug/kg	100	14.	1
1,4-Diethylbenzene	1.2	J	ug/kg	4.0	0.16	1
4-Ethyltoluene	ND		ug/kg	4.0	0.12	1
1,2,4,5-Tetramethylbenzene	2.6	J	ug/kg	4.0	0.13	1
Ethyl ether	ND		ug/kg	5.0	0.26	1
trans-1,4-Dichloro-2-butene	ND		ug/kg	5.0	0.39	1

Surrogate	% Recovery	Qualifier	Acceptance Criteria
1,2-Dichloroethane-d4	102		70-130
Toluene-d8	99		70-130
4-Bromofluorobenzene	112		70-130
Dibromofluoromethane	95		70-130

Project Name: MCGUINNESS BOULEVARD **Lab Number:** L1428173

Project Number: Not Specified **Report Date:** 12/02/14

SAMPLE RESULTS

Lab ID:	L1428173-05 D	Date Collected:	11/20/14 11:45
Client ID:	VHB SB-1 (8-10')	Date Received:	11/21/14
Sample Location:	209-235 MCGUINESS BLVD.	Field Prep:	Not Specified
Matrix:	Soil		
Analytical Method:	1,8260C		
Analytical Date:	11/24/14 16:30		
Analyst:	BN		
Percent Solids:	85%		

Parameter	Result	Qualifier	Units	RL	MDL	Dilution Factor
Volatile Organics by 8260/5035 - Westborough Lab						
Methylene chloride	ND		ug/kg	14000	1600	20
1,1-Dichloroethane	ND		ug/kg	2100	120	20
Chloroform	ND		ug/kg	2100	520	20
Carbon tetrachloride	ND		ug/kg	1400	300	20
1,2-Dichloropropane	ND		ug/kg	4900	320	20
Dibromochloromethane	ND		ug/kg	1400	220	20
1,1,2-Trichloroethane	ND		ug/kg	2100	430	20
Tetrachloroethene	ND		ug/kg	1400	200	20
Chlorobenzene	ND		ug/kg	1400	490	20
Trichlorofluoromethane	ND		ug/kg	7000	550	20
1,2-Dichloroethane	ND		ug/kg	1400	160	20
1,1,1-Trichloroethane	ND		ug/kg	1400	160	20
Bromodichloromethane	ND		ug/kg	1400	240	20
trans-1,3-Dichloropropene	ND		ug/kg	1400	170	20
cis-1,3-Dichloropropene	ND		ug/kg	1400	160	20
1,3-Dichloropropene, Total	ND		ug/kg	1400	160	20
1,1-Dichloropropene	ND		ug/kg	7000	200	20
Bromoform	ND		ug/kg	5600	330	20
1,1,2,2-Tetrachloroethane	ND		ug/kg	1400	140	20
Benzene	ND		ug/kg	1400	170	20
Toluene	ND		ug/kg	2100	270	20
Ethylbenzene	ND		ug/kg	1400	180	20
Chloromethane	ND		ug/kg	7000	410	20
Bromomethane	ND		ug/kg	2800	480	20
Vinyl chloride	ND		ug/kg	2800	160	20
Chloroethane	ND		ug/kg	2800	440	20
1,1-Dichloroethene	ND		ug/kg	1400	370	20
trans-1,2-Dichloroethene	ND		ug/kg	2100	300	20
Trichloroethene	ND		ug/kg	1400	180	20
1,2-Dichlorobenzene	ND		ug/kg	7000	220	20

Project Name: MCGUINNESS BOULEVARD **Lab Number:** L1428173

Project Number: Not Specified **Report Date:** 12/02/14

SAMPLE RESULTS

Lab ID: L1428173-05 D Date Collected: 11/20/14 11:45

Client ID: VHB SB-1 (8-10') Date Received: 11/21/14

Sample Location: 209-235 MCGUINESS BLVD. Field Prep: Not Specified

Parameter	Result	Qualifier	Units	RL	MDL	Dilution Factor
Volatile Organics by 8260/5035 - Westborough Lab						
1,3-Dichlorobenzene	ND		ug/kg	7000	190	20
1,4-Dichlorobenzene	ND		ug/kg	7000	200	20
Methyl tert butyl ether	ND		ug/kg	2800	120	20
p/m-Xylene	ND		ug/kg	2800	280	20
o-Xylene	ND		ug/kg	2800	240	20
Xylene (Total)	ND		ug/kg	2800	240	20
cis-1,2-Dichloroethene	ND		ug/kg	1400	200	20
1,2-Dichloroethene (total)	ND		ug/kg	1400	200	20
Dibromomethane	ND		ug/kg	14000	230	20
Styrene	ND		ug/kg	2800	570	20
Dichlorodifluoromethane	ND		ug/kg	14000	270	20
Acetone	ND		ug/kg	14000	1500	20
Carbon disulfide	ND		ug/kg	14000	1600	20
2-Butanone	ND		ug/kg	14000	380	20
Vinyl acetate	ND		ug/kg	14000	190	20
4-Methyl-2-pentanone	ND		ug/kg	14000	340	20
1,2,3-Trichloropropane	ND		ug/kg	14000	230	20
2-Hexanone	ND		ug/kg	14000	940	20
Bromochloromethane	ND		ug/kg	7000	390	20
2,2-Dichloropropane	ND		ug/kg	7000	320	20
1,2-Dibromoethane	ND		ug/kg	5600	240	20
1,3-Dichloropropane	ND		ug/kg	7000	200	20
1,1,1,2-Tetrachloroethane	ND		ug/kg	1400	450	20
Bromobenzene	ND		ug/kg	7000	290	20
n-Butylbenzene	2900		ug/kg	1400	160	20
sec-Butylbenzene	2300		ug/kg	1400	170	20
tert-Butylbenzene	ND		ug/kg	7000	190	20
o-Chlorotoluene	ND		ug/kg	7000	220	20
p-Chlorotoluene	ND		ug/kg	7000	190	20
1,2-Dibromo-3-chloropropane	ND		ug/kg	7000	560	20
Hexachlorobutadiene	ND		ug/kg	7000	320	20
Isopropylbenzene	2600		ug/kg	1400	150	20
p-Isopropyltoluene	ND		ug/kg	1400	180	20
Naphthalene	ND		ug/kg	7000	200	20
Acrylonitrile	ND		ug/kg	14000	720	20
n-Propylbenzene	2600		ug/kg	1400	150	20
1,2,3-Trichlorobenzene	ND		ug/kg	7000	210	20
1,2,4-Trichlorobenzene	ND		ug/kg	7000	260	20
1,3,5-Trimethylbenzene	ND		ug/kg	7000	200	20

Project Name: MCGUINNESS BOULEVARD **Lab Number:** L1428173

Project Number: Not Specified **Report Date:** 12/02/14

SAMPLE RESULTS

Lab ID: L1428173-05 D Date Collected: 11/20/14 11:45

Client ID: VHB SB-1 (8-10') Date Received: 11/21/14

Sample Location: 209-235 MCGUINESS BLVD. Field Prep: Not Specified

Parameter	Result	Qualifier	Units	RL	MDL	Dilution Factor
Volatile Organics by 8260/5035 - Westborough Lab						
1,2,4-Trimethylbenzene	ND		ug/kg	7000	200	20
1,4-Dioxane	ND		ug/kg	140000	20000	20
1,4-Diethylbenzene	2700	J	ug/kg	5600	220	20
4-Ethyltoluene	ND		ug/kg	5600	170	20
1,2,4,5-Tetramethylbenzene	5800		ug/kg	5600	180	20
Ethyl ether	ND		ug/kg	7000	370	20
trans-1,4-Dichloro-2-butene	ND		ug/kg	7000	550	20

Surrogate	% Recovery	Qualifier	Acceptance Criteria
1,2-Dichloroethane-d4	93		70-130
Toluene-d8	104		70-130
4-Bromofluorobenzene	118		70-130
Dibromofluoromethane	85		70-130

Project Name: MCGUINNESS BOULEVARD **Lab Number:** L1428173

Project Number: Not Specified **Report Date:** 12/02/14

SAMPLE RESULTS

Lab ID:	L1428173-06	Date Collected:	11/20/14 13:20
Client ID:	VHB SB-5 (0-2')	Date Received:	11/21/14
Sample Location:	209-235 MCGUINESS BLVD.	Field Prep:	Not Specified
Matrix:	Soil		
Analytical Method:	1,8260C		
Analytical Date:	11/25/14 11:29		
Analyst:	BN		
Percent Solids:	85%		

Parameter	Result	Qualifier	Units	RL	MDL	Dilution Factor
Volatile Organics by 8260/5035 - Westborough Lab						
Methylene chloride	ND		ug/kg	13	1.4	1
1,1-Dichloroethane	ND		ug/kg	2.0	0.11	1
Chloroform	ND		ug/kg	2.0	0.48	1
Carbon tetrachloride	ND		ug/kg	1.3	0.27	1
1,2-Dichloropropane	ND		ug/kg	4.6	0.30	1
Dibromochloromethane	ND		ug/kg	1.3	0.20	1
1,1,2-Trichloroethane	ND		ug/kg	2.0	0.40	1
Tetrachloroethene	0.43	J	ug/kg	1.3	0.18	1
Chlorobenzene	ND		ug/kg	1.3	0.46	1
Trichlorofluoromethane	ND		ug/kg	6.5	0.51	1
1,2-Dichloroethane	ND		ug/kg	1.3	0.15	1
1,1,1-Trichloroethane	ND		ug/kg	1.3	0.14	1
Bromodichloromethane	ND		ug/kg	1.3	0.23	1
trans-1,3-Dichloropropene	ND		ug/kg	1.3	0.16	1
cis-1,3-Dichloropropene	ND		ug/kg	1.3	0.15	1
1,3-Dichloropropene, Total	ND		ug/kg	1.3	0.15	1
1,1-Dichloropropene	ND		ug/kg	6.5	0.18	1
Bromoform	ND		ug/kg	5.2	0.31	1
1,1,2,2-Tetrachloroethane	ND		ug/kg	1.3	0.13	1
Benzene	ND		ug/kg	1.3	0.15	1
Toluene	ND		ug/kg	2.0	0.25	1
Ethylbenzene	ND		ug/kg	1.3	0.17	1
Chloromethane	ND		ug/kg	6.5	0.38	1
Bromomethane	ND		ug/kg	2.6	0.44	1
Vinyl chloride	ND		ug/kg	2.6	0.15	1
Chloroethane	ND		ug/kg	2.6	0.41	1
1,1-Dichloroethene	ND		ug/kg	1.3	0.34	1
trans-1,2-Dichloroethene	ND		ug/kg	2.0	0.28	1
Trichloroethene	ND		ug/kg	1.3	0.16	1
1,2-Dichlorobenzene	ND		ug/kg	6.5	0.20	1

Project Name: MCGUINNESS BOULEVARD **Lab Number:** L1428173

Project Number: Not Specified **Report Date:** 12/02/14

SAMPLE RESULTS

Lab ID: L1428173-06 Date Collected: 11/20/14 13:20

Client ID: VHB SB-5 (0-2') Date Received: 11/21/14

Sample Location: 209-235 MCGUINESS BLVD. Field Prep: Not Specified

Parameter	Result	Qualifier	Units	RL	MDL	Dilution Factor
Volatile Organics by 8260/5035 - Westborough Lab						
1,3-Dichlorobenzene	ND		ug/kg	6.5	0.18	1
1,4-Dichlorobenzene	ND		ug/kg	6.5	0.18	1
Methyl tert butyl ether	ND		ug/kg	2.6	0.11	1
p/m-Xylene	ND		ug/kg	2.6	0.26	1
o-Xylene	ND		ug/kg	2.6	0.22	1
Xylene (Total)	ND		ug/kg	2.6	0.22	1
cis-1,2-Dichloroethene	ND		ug/kg	1.3	0.19	1
1,2-Dichloroethene (total)	ND		ug/kg	1.3	0.19	1
Dibromomethane	ND		ug/kg	13	0.21	1
Styrene	ND		ug/kg	2.6	0.53	1
Dichlorodifluoromethane	ND		ug/kg	13	0.25	1
Acetone	47		ug/kg	13	1.4	1
Carbon disulfide	ND		ug/kg	13	1.4	1
2-Butanone	ND		ug/kg	13	0.36	1
Vinyl acetate	ND		ug/kg	13	0.17	1
4-Methyl-2-pentanone	ND		ug/kg	13	0.32	1
1,2,3-Trichloropropane	ND		ug/kg	13	0.21	1
2-Hexanone	ND		ug/kg	13	0.87	1
Bromochloromethane	ND		ug/kg	6.5	0.36	1
2,2-Dichloropropane	ND		ug/kg	6.5	0.30	1
1,2-Dibromoethane	ND		ug/kg	5.2	0.23	1
1,3-Dichloropropane	ND		ug/kg	6.5	0.19	1
1,1,1,2-Tetrachloroethane	ND		ug/kg	1.3	0.42	1
Bromobenzene	ND		ug/kg	6.5	0.27	1
n-Butylbenzene	ND		ug/kg	1.3	0.15	1
sec-Butylbenzene	ND		ug/kg	1.3	0.16	1
tert-Butylbenzene	ND		ug/kg	6.5	0.18	1
o-Chlorotoluene	ND		ug/kg	6.5	0.21	1
p-Chlorotoluene	ND		ug/kg	6.5	0.17	1
1,2-Dibromo-3-chloropropane	ND		ug/kg	6.5	0.52	1
Hexachlorobutadiene	ND		ug/kg	6.5	0.30	1
Isopropylbenzene	ND		ug/kg	1.3	0.14	1
p-Isopropyltoluene	ND		ug/kg	1.3	0.16	1
Naphthalene	0.34	J	ug/kg	6.5	0.18	1
Acrylonitrile	ND		ug/kg	13	0.67	1
n-Propylbenzene	ND		ug/kg	1.3	0.14	1
1,2,3-Trichlorobenzene	ND		ug/kg	6.5	0.19	1
1,2,4-Trichlorobenzene	ND		ug/kg	6.5	0.24	1
1,3,5-Trimethylbenzene	ND		ug/kg	6.5	0.19	1

Project Name: MCGUINNESS BOULEVARD **Lab Number:** L1428173

Project Number: Not Specified **Report Date:** 12/02/14

SAMPLE RESULTS

Lab ID: L1428173-06 Date Collected: 11/20/14 13:20

Client ID: VHB SB-5 (0-2') Date Received: 11/21/14

Sample Location: 209-235 MCGUINESS BLVD. Field Prep: Not Specified

Parameter	Result	Qualifier	Units	RL	MDL	Dilution Factor
Volatile Organics by 8260/5035 - Westborough Lab						
1,2,4-Trimethylbenzene	ND		ug/kg	6.5	0.18	1
1,4-Dioxane	ND		ug/kg	130	19.	1
1,4-Diethylbenzene	ND		ug/kg	5.2	0.21	1
4-Ethyltoluene	ND		ug/kg	5.2	0.16	1
1,2,4,5-Tetramethylbenzene	ND		ug/kg	5.2	0.17	1
Ethyl ether	ND		ug/kg	6.5	0.34	1
trans-1,4-Dichloro-2-butene	ND		ug/kg	6.5	0.51	1

Surrogate	% Recovery	Qualifier	Acceptance Criteria
1,2-Dichloroethane-d4	102		70-130
Toluene-d8	100		70-130
4-Bromofluorobenzene	107		70-130
Dibromofluoromethane	84		70-130

Project Name: MCGUINNESS BOULEVARD **Lab Number:** L1428173

Project Number: Not Specified **Report Date:** 12/02/14

SAMPLE RESULTS

Lab ID:	L1428173-07	Date Collected:	11/20/14 13:45
Client ID:	VHB SB-5 (14-16')	Date Received:	11/21/14
Sample Location:	209-235 MCGUINESS BLVD.	Field Prep:	Not Specified
Matrix:	Soil		
Analytical Method:	1,8260C		
Analytical Date:	11/25/14 11:54		
Analyst:	BN		
Percent Solids:	67%		

Parameter	Result	Qualifier	Units	RL	MDL	Dilution Factor
Volatile Organics by 8260/5035 - Westborough Lab						
Methylene chloride	ND		ug/kg	19	2.1	1
1,1-Dichloroethane	ND		ug/kg	2.9	0.16	1
Chloroform	ND		ug/kg	2.9	0.71	1
Carbon tetrachloride	ND		ug/kg	1.9	0.40	1
1,2-Dichloropropane	ND		ug/kg	6.7	0.44	1
Dibromochloromethane	ND		ug/kg	1.9	0.29	1
1,1,2-Trichloroethane	ND		ug/kg	2.9	0.58	1
Tetrachloroethene	ND		ug/kg	1.9	0.27	1
Chlorobenzene	ND		ug/kg	1.9	0.66	1
Trichlorofluoromethane	ND		ug/kg	9.6	0.74	1
1,2-Dichloroethane	ND		ug/kg	1.9	0.22	1
1,1,1-Trichloroethane	ND		ug/kg	1.9	0.21	1
Bromodichloromethane	ND		ug/kg	1.9	0.33	1
trans-1,3-Dichloropropene	ND		ug/kg	1.9	0.23	1
cis-1,3-Dichloropropene	ND		ug/kg	1.9	0.22	1
1,3-Dichloropropene, Total	ND		ug/kg	1.9	0.22	1
1,1-Dichloropropene	ND		ug/kg	9.6	0.27	1
Bromoform	ND		ug/kg	7.6	0.45	1
1,1,2,2-Tetrachloroethane	ND		ug/kg	1.9	0.19	1
Benzene	ND		ug/kg	1.9	0.22	1
Toluene	5.3		ug/kg	2.9	0.37	1
Ethylbenzene	ND		ug/kg	1.9	0.24	1
Chloromethane	ND		ug/kg	9.6	0.56	1
Bromomethane	ND		ug/kg	3.8	0.64	1
Vinyl chloride	ND		ug/kg	3.8	0.22	1
Chloroethane	ND		ug/kg	3.8	0.60	1
1,1-Dichloroethene	ND		ug/kg	1.9	0.50	1
trans-1,2-Dichloroethene	ND		ug/kg	2.9	0.40	1
Trichloroethene	ND		ug/kg	1.9	0.24	1
1,2-Dichlorobenzene	ND		ug/kg	9.6	0.29	1

Project Name: MCGUINNESS BOULEVARD **Lab Number:** L1428173

Project Number: Not Specified **Report Date:** 12/02/14

SAMPLE RESULTS

Lab ID: L1428173-07 Date Collected: 11/20/14 13:45

Client ID: VHB SB-5 (14-16') Date Received: 11/21/14

Sample Location: 209-235 MCGUINESS BLVD. Field Prep: Not Specified

Parameter	Result	Qualifier	Units	RL	MDL	Dilution Factor
Volatile Organics by 8260/5035 - Westborough Lab						
1,3-Dichlorobenzene	ND		ug/kg	9.6	0.26	1
1,4-Dichlorobenzene	ND		ug/kg	9.6	0.26	1
Methyl tert butyl ether	ND		ug/kg	3.8	0.16	1
p/m-Xylene	ND		ug/kg	3.8	0.38	1
o-Xylene	ND		ug/kg	3.8	0.33	1
Xylene (Total)	ND		ug/kg	3.8	0.33	1
cis-1,2-Dichloroethene	ND		ug/kg	1.9	0.27	1
1,2-Dichloroethene (total)	ND		ug/kg	1.9	0.27	1
Dibromomethane	ND		ug/kg	19	0.31	1
Styrene	ND		ug/kg	3.8	0.77	1
Dichlorodifluoromethane	ND		ug/kg	19	0.36	1
Acetone	41		ug/kg	19	2.0	1
Carbon disulfide	ND		ug/kg	19	2.1	1
2-Butanone	3.2	J	ug/kg	19	0.52	1
Vinyl acetate	ND		ug/kg	19	0.25	1
4-Methyl-2-pentanone	ND		ug/kg	19	0.47	1
1,2,3-Trichloropropane	ND		ug/kg	19	0.31	1
2-Hexanone	ND		ug/kg	19	1.3	1
Bromochloromethane	ND		ug/kg	9.6	0.53	1
2,2-Dichloropropane	ND		ug/kg	9.6	0.43	1
1,2-Dibromoethane	ND		ug/kg	7.6	0.33	1
1,3-Dichloropropane	ND		ug/kg	9.6	0.28	1
1,1,1,2-Tetrachloroethane	ND		ug/kg	1.9	0.61	1
Bromobenzene	ND		ug/kg	9.6	0.40	1
n-Butylbenzene	ND		ug/kg	1.9	0.22	1
sec-Butylbenzene	ND		ug/kg	1.9	0.23	1
tert-Butylbenzene	ND		ug/kg	9.6	0.26	1
o-Chlorotoluene	ND		ug/kg	9.6	0.30	1
p-Chlorotoluene	ND		ug/kg	9.6	0.25	1
1,2-Dibromo-3-chloropropane	ND		ug/kg	9.6	0.76	1
Hexachlorobutadiene	ND		ug/kg	9.6	0.44	1
Isopropylbenzene	ND		ug/kg	1.9	0.20	1
p-Isopropyltoluene	ND		ug/kg	1.9	0.24	1
Naphthalene	ND		ug/kg	9.6	0.26	1
Acrylonitrile	ND		ug/kg	19	0.98	1
n-Propylbenzene	ND		ug/kg	1.9	0.21	1
1,2,3-Trichlorobenzene	ND		ug/kg	9.6	0.28	1
1,2,4-Trichlorobenzene	ND		ug/kg	9.6	0.35	1
1,3,5-Trimethylbenzene	ND		ug/kg	9.6	0.27	1

Project Name: MCGUINNESS BOULEVARD **Lab Number:** L1428173

Project Number: Not Specified **Report Date:** 12/02/14

SAMPLE RESULTS

Lab ID: L1428173-07 Date Collected: 11/20/14 13:45

Client ID: VHB SB-5 (14-16') Date Received: 11/21/14

Sample Location: 209-235 MCGUINESS BLVD. Field Prep: Not Specified

Parameter	Result	Qualifier	Units	RL	MDL	Dilution Factor
Volatile Organics by 8260/5035 - Westborough Lab						
1,2,4-Trimethylbenzene	ND		ug/kg	9.6	0.27	1
1,4-Dioxane	ND		ug/kg	190	28.	1
1,4-Diethylbenzene	ND		ug/kg	7.6	0.30	1
4-Ethyltoluene	ND		ug/kg	7.6	0.24	1
1,2,4,5-Tetramethylbenzene	ND		ug/kg	7.6	0.25	1
Ethyl ether	ND		ug/kg	9.6	0.50	1
trans-1,4-Dichloro-2-butene	ND		ug/kg	9.6	0.75	1

Surrogate	% Recovery	Qualifier	Acceptance Criteria
1,2-Dichloroethane-d4	104		70-130
Toluene-d8	103		70-130
4-Bromofluorobenzene	106		70-130
Dibromofluoromethane	102		70-130

Project Name: MCGUINNESS BOULEVARD **Lab Number:** L1428173

Project Number: Not Specified **Report Date:** 12/02/14

SAMPLE RESULTS

Lab ID:	L1428173-08	Date Collected:	11/20/14 13:50
Client ID:	VHB GW-1	Date Received:	11/21/14
Sample Location:	209-235 MCGUINESS BLVD.	Field Prep:	Not Specified
Matrix:	Water		
Analytical Method:	1,8260C		
Analytical Date:	11/26/14 20:02		
Analyst:	PD		

Parameter	Result	Qualifier	Units	RL	MDL	Dilution Factor
Volatile Organics by GC/MS - Westborough Lab						
Methylene chloride	ND		ug/l	2.5	0.70	1
1,1-Dichloroethane	ND		ug/l	2.5	0.70	1
Chloroform	ND		ug/l	2.5	0.70	1
Carbon tetrachloride	ND		ug/l	0.50	0.13	1
1,2-Dichloropropane	ND		ug/l	1.0	0.13	1
Dibromochloromethane	ND		ug/l	0.50	0.15	1
1,1,2-Trichloroethane	ND		ug/l	1.5	0.50	1
Tetrachloroethene	ND		ug/l	0.50	0.18	1
Chlorobenzene	ND		ug/l	2.5	0.70	1
Trichlorofluoromethane	ND		ug/l	2.5	0.70	1
1,2-Dichloroethane	ND		ug/l	0.50	0.13	1
1,1,1-Trichloroethane	ND		ug/l	2.5	0.70	1
Bromodichloromethane	ND		ug/l	0.50	0.19	1
trans-1,3-Dichloropropene	ND		ug/l	0.50	0.16	1
cis-1,3-Dichloropropene	ND		ug/l	0.50	0.14	1
1,3-Dichloropropene, Total	ND		ug/l	0.50	0.14	1
1,1-Dichloropropene	ND		ug/l	2.5	0.70	1
Bromoform	ND		ug/l	2.0	0.65	1
1,1,2,2-Tetrachloroethane	ND		ug/l	0.50	0.14	1
Benzene	ND		ug/l	0.50	0.16	1
Toluene	ND		ug/l	2.5	0.70	1
Ethylbenzene	ND		ug/l	2.5	0.70	1
Chloromethane	ND		ug/l	2.5	0.70	1
Bromomethane	ND		ug/l	2.5	0.70	1
Vinyl chloride	ND		ug/l	1.0	0.33	1
Chloroethane	ND		ug/l	2.5	0.70	1
1,1-Dichloroethene	ND		ug/l	0.50	0.14	1
trans-1,2-Dichloroethene	ND		ug/l	2.5	0.70	1
Trichloroethene	ND		ug/l	0.50	0.18	1
1,2-Dichlorobenzene	ND		ug/l	2.5	0.70	1

Project Name: MCGUINNESS BOULEVARD **Lab Number:** L1428173

Project Number: Not Specified **Report Date:** 12/02/14

SAMPLE RESULTS

Lab ID: L1428173-08 Date Collected: 11/20/14 13:50

Client ID: VHB GW-1 Date Received: 11/21/14

Sample Location: 209-235 MCGUINESS BLVD. Field Prep: Not Specified

Parameter	Result	Qualifier	Units	RL	MDL	Dilution Factor
Volatile Organics by GC/MS - Westborough Lab						
1,3-Dichlorobenzene	ND		ug/l	2.5	0.70	1
1,4-Dichlorobenzene	ND		ug/l	2.5	0.70	1
Methyl tert butyl ether	ND		ug/l	2.5	0.70	1
p/m-Xylene	ND		ug/l	2.5	0.70	1
o-Xylene	ND		ug/l	2.5	0.70	1
Xylenes, Total	ND		ug/l	2.5	0.70	1
cis-1,2-Dichloroethene	ND		ug/l	2.5	0.70	1
1,2-Dichloroethene, Total	ND		ug/l	2.5	0.70	1
Dibromomethane	ND		ug/l	5.0	1.0	1
1,2,3-Trichloropropane	ND		ug/l	2.5	0.70	1
Acrylonitrile	ND		ug/l	5.0	1.5	1
Styrene	ND		ug/l	2.5	0.70	1
Dichlorodifluoromethane	ND		ug/l	5.0	1.0	1
Acetone	2.0	J	ug/l	5.0	1.5	1
Carbon disulfide	ND		ug/l	5.0	1.0	1
2-Butanone	ND		ug/l	5.0	1.9	1
Vinyl acetate	ND		ug/l	5.0	1.0	1
4-Methyl-2-pentanone	ND		ug/l	5.0	1.0	1
2-Hexanone	ND		ug/l	5.0	1.0	1
Bromochloromethane	ND		ug/l	2.5	0.70	1
2,2-Dichloropropane	ND		ug/l	2.5	0.70	1
1,2-Dibromoethane	ND		ug/l	2.0	0.65	1
1,3-Dichloropropane	ND		ug/l	2.5	0.70	1
1,1,1,2-Tetrachloroethane	ND		ug/l	2.5	0.70	1
Bromobenzene	ND		ug/l	2.5	0.70	1
n-Butylbenzene	ND		ug/l	2.5	0.70	1
sec-Butylbenzene	ND		ug/l	2.5	0.70	1
tert-Butylbenzene	ND		ug/l	2.5	0.70	1
o-Chlorotoluene	ND		ug/l	2.5	0.70	1
p-Chlorotoluene	ND		ug/l	2.5	0.70	1
1,2-Dibromo-3-chloropropane	ND		ug/l	2.5	0.70	1
Hexachlorobutadiene	ND		ug/l	2.5	0.70	1
Isopropylbenzene	ND		ug/l	2.5	0.70	1
p-Isopropyltoluene	ND		ug/l	2.5	0.70	1
Naphthalene	ND		ug/l	2.5	0.70	1
n-Propylbenzene	ND		ug/l	2.5	0.70	1
1,2,3-Trichlorobenzene	ND		ug/l	2.5	0.70	1
1,2,4-Trichlorobenzene	ND		ug/l	2.5	0.70	1
1,3,5-Trimethylbenzene	ND		ug/l	2.5	0.70	1

Project Name: MCGUINNESS BOULEVARD **Lab Number:** L1428173

Project Number: Not Specified **Report Date:** 12/02/14

SAMPLE RESULTS

Lab ID: L1428173-08 Date Collected: 11/20/14 13:50

Client ID: VHB GW-1 Date Received: 11/21/14

Sample Location: 209-235 MCGUINESS BLVD. Field Prep: Not Specified

Parameter	Result	Qualifier	Units	RL	MDL	Dilution Factor
Volatile Organics by GC/MS - Westborough Lab						
1,2,4-Trimethylbenzene	ND		ug/l	2.5	0.70	1
1,4-Dioxane	ND		ug/l	250	41.	1
p-Diethylbenzene	ND		ug/l	2.0	0.70	1
p-Ethyltoluene	ND		ug/l	2.0	0.70	1
1,2,4,5-Tetramethylbenzene	ND		ug/l	2.0	0.65	1
Ethyl ether	ND		ug/l	2.5	0.70	1
trans-1,4-Dichloro-2-butene	ND		ug/l	2.5	0.70	1

Surrogate	% Recovery	Qualifier	Acceptance Criteria
1,2-Dichloroethane-d4	103		70-130
Toluene-d8	103		70-130
4-Bromofluorobenzene	101		70-130
Dibromofluoromethane	100		70-130

Project Name: MCGUINNESS BOULEVARD **Lab Number:** L1428173

Project Number: Not Specified **Report Date:** 12/02/14

SAMPLE RESULTS

Lab ID:	L1428173-09	Date Collected:	11/20/14 14:40
Client ID:	VHB SB-3 (0-2')	Date Received:	11/21/14
Sample Location:	209-235 MCGUINESS BLVD.	Field Prep:	Not Specified
Matrix:	Soil		
Analytical Method:	1,8260C		
Analytical Date:	11/24/14 16:56		
Analyst:	BN		
Percent Solids:	85%		

Parameter	Result	Qualifier	Units	RL	MDL	Dilution Factor
Volatile Organics by 8260/5035 - Westborough Lab						
Methylene chloride	ND		ug/kg	980	110	1
1,1-Dichloroethane	ND		ug/kg	150	8.4	1
Chloroform	ND		ug/kg	150	36.	1
Carbon tetrachloride	ND		ug/kg	98	20.	1
1,2-Dichloropropane	ND		ug/kg	340	22.	1
Dibromochloromethane	ND		ug/kg	98	15.	1
1,1,2-Trichloroethane	ND		ug/kg	150	30.	1
Tetrachloroethene	ND		ug/kg	98	14.	1
Chlorobenzene	ND		ug/kg	98	34.	1
Trichlorofluoromethane	ND		ug/kg	490	38.	1
1,2-Dichloroethane	ND		ug/kg	98	11.	1
1,1,1-Trichloroethane	ND		ug/kg	98	11.	1
Bromodichloromethane	ND		ug/kg	98	17.	1
trans-1,3-Dichloropropene	ND		ug/kg	98	12.	1
cis-1,3-Dichloropropene	ND		ug/kg	98	11.	1
1,3-Dichloropropene, Total	ND		ug/kg	98	11.	1
1,1-Dichloropropene	ND		ug/kg	490	14.	1
Bromoform	ND		ug/kg	390	23.	1
1,1,2,2-Tetrachloroethane	ND		ug/kg	98	9.8	1
Benzene	ND		ug/kg	98	12.	1
Toluene	ND		ug/kg	150	19.	1
Ethylbenzene	ND		ug/kg	98	12.	1
Chloromethane	ND		ug/kg	490	29.	1
Bromomethane	ND		ug/kg	200	33.	1
Vinyl chloride	ND		ug/kg	200	11.	1
Chloroethane	ND		ug/kg	200	31.	1
1,1-Dichloroethene	ND		ug/kg	98	26.	1
trans-1,2-Dichloroethene	ND		ug/kg	150	21.	1
Trichloroethene	ND		ug/kg	98	12.	1
1,2-Dichlorobenzene	ND		ug/kg	490	15.	1

Project Name: MCGUINNESS BOULEVARD **Lab Number:** L1428173

Project Number: Not Specified **Report Date:** 12/02/14

SAMPLE RESULTS

Lab ID: L1428173-09 Date Collected: 11/20/14 14:40

Client ID: VHB SB-3 (0-2') Date Received: 11/21/14

Sample Location: 209-235 MCGUINESS BLVD. Field Prep: Not Specified

Parameter	Result	Qualifier	Units	RL	MDL	Dilution Factor
Volatile Organics by 8260/5035 - Westborough Lab						
1,3-Dichlorobenzene	ND		ug/kg	490	13.	1
1,4-Dichlorobenzene	ND		ug/kg	490	14.	1
Methyl tert butyl ether	ND		ug/kg	200	8.2	1
p/m-Xylene	ND		ug/kg	200	19.	1
o-Xylene	ND		ug/kg	200	17.	1
Xylene (Total)	ND		ug/kg	200	17.	1
cis-1,2-Dichloroethene	ND		ug/kg	98	14.	1
1,2-Dichloroethene (total)	ND		ug/kg	98	14.	1
Dibromomethane	ND		ug/kg	980	16.	1
Styrene	ND		ug/kg	200	39.	1
Dichlorodifluoromethane	ND		ug/kg	980	19.	1
Acetone	ND		ug/kg	980	100	1
Carbon disulfide	ND		ug/kg	980	110	1
2-Butanone	ND		ug/kg	980	26.	1
Vinyl acetate	ND		ug/kg	980	13.	1
4-Methyl-2-pentanone	ND		ug/kg	980	24.	1
1,2,3-Trichloropropane	ND		ug/kg	980	16.	1
2-Hexanone	ND		ug/kg	980	65.	1
Bromochloromethane	ND		ug/kg	490	27.	1
2,2-Dichloropropane	ND		ug/kg	490	22.	1
1,2-Dibromoethane	ND		ug/kg	390	17.	1
1,3-Dichloropropane	ND		ug/kg	490	14.	1
1,1,1,2-Tetrachloroethane	ND		ug/kg	98	31.	1
Bromobenzene	ND		ug/kg	490	20.	1
n-Butylbenzene	ND		ug/kg	98	11.	1
sec-Butylbenzene	ND		ug/kg	98	12.	1
tert-Butylbenzene	ND		ug/kg	490	13.	1
o-Chlorotoluene	ND		ug/kg	490	16.	1
p-Chlorotoluene	ND		ug/kg	490	13.	1
1,2-Dibromo-3-chloropropane	ND		ug/kg	490	39.	1
Hexachlorobutadiene	ND		ug/kg	490	22.	1
Isopropylbenzene	ND		ug/kg	98	10.	1
p-Isopropyltoluene	ND		ug/kg	98	12.	1
Naphthalene	2600		ug/kg	490	14.	1
Acrylonitrile	ND		ug/kg	980	50.	1
n-Propylbenzene	ND		ug/kg	98	11.	1
1,2,3-Trichlorobenzene	ND		ug/kg	490	14.	1
1,2,4-Trichlorobenzene	ND		ug/kg	490	18.	1
1,3,5-Trimethylbenzene	ND		ug/kg	490	14.	1

Project Name: MCGUINNESS BOULEVARD **Lab Number:** L1428173

Project Number: Not Specified **Report Date:** 12/02/14

SAMPLE RESULTS

Lab ID: L1428173-09 Date Collected: 11/20/14 14:40

Client ID: VHB SB-3 (0-2') Date Received: 11/21/14

Sample Location: 209-235 MCGUINESS BLVD. Field Prep: Not Specified

Parameter	Result	Qualifier	Units	RL	MDL	Dilution Factor
Volatile Organics by 8260/5035 - Westborough Lab						
1,2,4-Trimethylbenzene	ND		ug/kg	490	14.	1
1,4-Dioxane	ND		ug/kg	9800	1400	1
1,4-Diethylbenzene	ND		ug/kg	390	16.	1
4-Ethyltoluene	ND		ug/kg	390	12.	1
1,2,4,5-Tetramethylbenzene	ND		ug/kg	390	13.	1
Ethyl ether	ND		ug/kg	490	25.	1
trans-1,4-Dichloro-2-butene	ND		ug/kg	490	38.	1

Surrogate	% Recovery	Qualifier	Acceptance Criteria
1,2-Dichloroethane-d4	93		70-130
Toluene-d8	103		70-130
4-Bromofluorobenzene	107		70-130
Dibromofluoromethane	80		70-130

Project Name: MCGUINNESS BOULEVARD **Lab Number:** L1428173

Project Number: Not Specified **Report Date:** 12/02/14

SAMPLE RESULTS

Lab ID:	L1428173-10	Date Collected:	11/20/14 14:55
Client ID:	VHB SB-3 (14-16')	Date Received:	11/21/14
Sample Location:	209-235 MCGUINESS BLVD.	Field Prep:	Not Specified
Matrix:	Soil		
Analytical Method:	1,8260C		
Analytical Date:	11/24/14 17:23		
Analyst:	BN		
Percent Solids:	86%		

Parameter	Result	Qualifier	Units	RL	MDL	Dilution Factor
Volatile Organics by 8260/5035 - Westborough Lab						
Methylene chloride	ND		ug/kg	680	75.	1
1,1-Dichloroethane	ND		ug/kg	100	5.8	1
Chloroform	ND		ug/kg	100	25.	1
Carbon tetrachloride	ND		ug/kg	68	14.	1
1,2-Dichloropropane	ND		ug/kg	240	16.	1
Dibromochloromethane	ND		ug/kg	68	10.	1
1,1,2-Trichloroethane	ND		ug/kg	100	21.	1
Tetrachloroethene	ND		ug/kg	68	9.6	1
Chlorobenzene	ND		ug/kg	68	24.	1
Trichlorofluoromethane	ND		ug/kg	340	26.	1
1,2-Dichloroethane	ND		ug/kg	68	7.7	1
1,1,1-Trichloroethane	ND		ug/kg	68	7.6	1
Bromodichloromethane	ND		ug/kg	68	12.	1
trans-1,3-Dichloropropene	ND		ug/kg	68	8.2	1
cis-1,3-Dichloropropene	ND		ug/kg	68	8.0	1
1,3-Dichloropropene, Total	ND		ug/kg	68	8.0	1
1,1-Dichloropropene	ND		ug/kg	340	9.6	1
Bromoform	ND		ug/kg	270	16.	1
1,1,2,2-Tetrachloroethane	ND		ug/kg	68	6.9	1
Benzene	ND		ug/kg	68	8.0	1
Toluene	ND		ug/kg	100	13.	1
Ethylbenzene	ND		ug/kg	68	8.7	1
Chloromethane	ND		ug/kg	340	20.	1
Bromomethane	ND		ug/kg	140	23.	1
Vinyl chloride	ND		ug/kg	140	8.0	1
Chloroethane	ND		ug/kg	140	22.	1
1,1-Dichloroethene	ND		ug/kg	68	18.	1
trans-1,2-Dichloroethene	ND		ug/kg	100	14.	1
Trichloroethene	ND		ug/kg	68	8.5	1
1,2-Dichlorobenzene	ND		ug/kg	340	10.	1

Project Name: MCGUINNESS BOULEVARD **Lab Number:** L1428173

Project Number: Not Specified **Report Date:** 12/02/14

SAMPLE RESULTS

Lab ID: L1428173-10 Date Collected: 11/20/14 14:55

Client ID: VHB SB-3 (14-16') Date Received: 11/21/14

Sample Location: 209-235 MCGUINESS BLVD. Field Prep: Not Specified

Parameter	Result	Qualifier	Units	RL	MDL	Dilution Factor
Volatile Organics by 8260/5035 - Westborough Lab						
1,3-Dichlorobenzene	ND		ug/kg	340	9.2	1
1,4-Dichlorobenzene	ND		ug/kg	340	9.4	1
Methyl tert butyl ether	ND		ug/kg	140	5.8	1
p/m-Xylene	ND		ug/kg	140	13.	1
o-Xylene	ND		ug/kg	140	12.	1
Xylene (Total)	ND		ug/kg	140	12.	1
cis-1,2-Dichloroethene	ND		ug/kg	68	9.7	1
1,2-Dichloroethene (total)	ND		ug/kg	68	9.7	1
Dibromomethane	ND		ug/kg	680	11.	1
Styrene	ND		ug/kg	140	27.	1
Dichlorodifluoromethane	ND		ug/kg	680	13.	1
Acetone	ND		ug/kg	680	71.	1
Carbon disulfide	ND		ug/kg	680	75.	1
2-Butanone	ND		ug/kg	680	18.	1
Vinyl acetate	ND		ug/kg	680	9.0	1
4-Methyl-2-pentanone	ND		ug/kg	680	17.	1
1,2,3-Trichloropropane	ND		ug/kg	680	11.	1
2-Hexanone	ND		ug/kg	680	45.	1
Bromochloromethane	ND		ug/kg	340	19.	1
2,2-Dichloropropane	ND		ug/kg	340	15.	1
1,2-Dibromoethane	ND		ug/kg	270	12.	1
1,3-Dichloropropane	ND		ug/kg	340	9.9	1
1,1,1,2-Tetrachloroethane	ND		ug/kg	68	22.	1
Bromobenzene	ND		ug/kg	340	14.	1
n-Butylbenzene	ND		ug/kg	68	7.8	1
sec-Butylbenzene	ND		ug/kg	68	8.3	1
tert-Butylbenzene	ND		ug/kg	340	9.2	1
o-Chlorotoluene	ND		ug/kg	340	11.	1
p-Chlorotoluene	ND		ug/kg	340	9.0	1
1,2-Dibromo-3-chloropropane	ND		ug/kg	340	27.	1
Hexachlorobutadiene	ND		ug/kg	340	16.	1
Isopropylbenzene	ND		ug/kg	68	7.1	1
p-Isopropyltoluene	ND		ug/kg	68	8.5	1
Naphthalene	2200		ug/kg	340	9.4	1
Acrylonitrile	ND		ug/kg	680	35.	1
n-Propylbenzene	ND		ug/kg	68	7.4	1
1,2,3-Trichlorobenzene	ND		ug/kg	340	10.	1
1,2,4-Trichlorobenzene	ND		ug/kg	340	12.	1
1,3,5-Trimethylbenzene	ND		ug/kg	340	9.8	1

Project Name: MCGUINNESS BOULEVARD **Lab Number:** L1428173

Project Number: Not Specified **Report Date:** 12/02/14

SAMPLE RESULTS

Lab ID: L1428173-10 Date Collected: 11/20/14 14:55

Client ID: VHB SB-3 (14-16') Date Received: 11/21/14

Sample Location: 209-235 MCGUINESS BLVD. Field Prep: Not Specified

Parameter	Result	Qualifier	Units	RL	MDL	Dilution Factor
Volatile Organics by 8260/5035 - Westborough Lab						
1,2,4-Trimethylbenzene	ND		ug/kg	340	9.6	1
1,4-Dioxane	ND		ug/kg	6800	980	1
1,4-Diethylbenzene	ND		ug/kg	270	11.	1
4-Ethyltoluene	ND		ug/kg	270	8.4	1
1,2,4,5-Tetramethylbenzene	ND		ug/kg	270	8.9	1
Ethyl ether	19	J	ug/kg	340	18.	1
trans-1,4-Dichloro-2-butene	ND		ug/kg	340	27.	1

Surrogate	% Recovery	Qualifier	Acceptance Criteria
1,2-Dichloroethane-d4	93		70-130
Toluene-d8	103		70-130
4-Bromofluorobenzene	108		70-130
Dibromofluoromethane	82		70-130

Project Name: MCGUINNESS BOULEVARD **Lab Number:** L1428173

Project Number: Not Specified **Report Date:** 12/02/14

SAMPLE RESULTS

Lab ID:	L1428173-11	Date Collected:	11/20/14 15:20
Client ID:	VHB SB-2 (0-2')	Date Received:	11/21/14
Sample Location:	209-235 MCGUINESS BLVD.	Field Prep:	Not Specified
Matrix:	Soil		
Analytical Method:	1,8260C		
Analytical Date:	11/24/14 17:49		
Analyst:	BN		
Percent Solids:	89%		

Parameter	Result	Qualifier	Units	RL	MDL	Dilution Factor
Volatile Organics by 8260/5035 - Westborough Lab						
Methylene chloride	ND		ug/kg	860	95.	1
1,1-Dichloroethane	ND		ug/kg	130	7.4	1
Chloroform	ND		ug/kg	130	32.	1
Carbon tetrachloride	ND		ug/kg	86	18.	1
1,2-Dichloropropane	ND		ug/kg	300	20.	1
Dibromochloromethane	ND		ug/kg	86	13.	1
1,1,2-Trichloroethane	ND		ug/kg	130	26.	1
Tetrachloroethene	ND		ug/kg	86	12.	1
Chlorobenzene	ND		ug/kg	86	30.	1
Trichlorofluoromethane	ND		ug/kg	430	33.	1
1,2-Dichloroethane	ND		ug/kg	86	9.8	1
1,1,1-Trichloroethane	ND		ug/kg	86	9.6	1
Bromodichloromethane	ND		ug/kg	86	15.	1
trans-1,3-Dichloropropene	ND		ug/kg	86	10.	1
cis-1,3-Dichloropropene	ND		ug/kg	86	10.	1
1,3-Dichloropropene, Total	ND		ug/kg	86	10.	1
1,1-Dichloropropene	ND		ug/kg	430	12.	1
Bromoform	ND		ug/kg	340	20.	1
1,1,2,2-Tetrachloroethane	ND		ug/kg	86	8.7	1
Benzene	ND		ug/kg	86	10.	1
Toluene	ND		ug/kg	130	17.	1
Ethylbenzene	ND		ug/kg	86	11.	1
Chloromethane	ND		ug/kg	430	25.	1
Bromomethane	ND		ug/kg	170	29.	1
Vinyl chloride	ND		ug/kg	170	10.	1
Chloroethane	ND		ug/kg	170	27.	1
1,1-Dichloroethene	ND		ug/kg	86	23.	1
trans-1,2-Dichloroethene	ND		ug/kg	130	18.	1
Trichloroethene	ND		ug/kg	86	11.	1
1,2-Dichlorobenzene	ND		ug/kg	430	13.	1

Project Name: MCGUINNESS BOULEVARD **Lab Number:** L1428173

Project Number: Not Specified **Report Date:** 12/02/14

SAMPLE RESULTS

Lab ID: L1428173-11 Date Collected: 11/20/14 15:20

Client ID: VHB SB-2 (0-2') Date Received: 11/21/14

Sample Location: 209-235 MCGUINESS BLVD. Field Prep: Not Specified

Parameter	Result	Qualifier	Units	RL	MDL	Dilution Factor
Volatile Organics by 8260/5035 - Westborough Lab						
1,3-Dichlorobenzene	ND		ug/kg	430	12.	1
1,4-Dichlorobenzene	ND		ug/kg	430	12.	1
Methyl tert butyl ether	ND		ug/kg	170	7.3	1
p/m-Xylene	ND		ug/kg	170	17.	1
o-Xylene	ND		ug/kg	170	15.	1
Xylene (Total)	ND		ug/kg	170	15.	1
cis-1,2-Dichloroethene	ND		ug/kg	86	12.	1
1,2-Dichloroethene (total)	ND		ug/kg	86	12.	1
Dibromomethane	ND		ug/kg	860	14.	1
Styrene	ND		ug/kg	170	35.	1
Dichlorodifluoromethane	ND		ug/kg	860	16.	1
Acetone	ND		ug/kg	860	89.	1
Carbon disulfide	ND		ug/kg	860	95.	1
2-Butanone	ND		ug/kg	860	23.	1
Vinyl acetate	ND		ug/kg	860	11.	1
4-Methyl-2-pentanone	ND		ug/kg	860	21.	1
1,2,3-Trichloropropane	ND		ug/kg	860	14.	1
2-Hexanone	ND		ug/kg	860	57.	1
Bromochloromethane	ND		ug/kg	430	24.	1
2,2-Dichloropropane	ND		ug/kg	430	20.	1
1,2-Dibromoethane	ND		ug/kg	340	15.	1
1,3-Dichloropropane	ND		ug/kg	430	12.	1
1,1,1,2-Tetrachloroethane	ND		ug/kg	86	27.	1
Bromobenzene	ND		ug/kg	430	18.	1
n-Butylbenzene	ND		ug/kg	86	9.9	1
sec-Butylbenzene	ND		ug/kg	86	10.	1
tert-Butylbenzene	ND		ug/kg	430	12.	1
o-Chlorotoluene	ND		ug/kg	430	14.	1
p-Chlorotoluene	ND		ug/kg	430	11.	1
1,2-Dibromo-3-chloropropane	ND		ug/kg	430	34.	1
Hexachlorobutadiene	ND		ug/kg	430	20.	1
Isopropylbenzene	ND		ug/kg	86	9.0	1
p-Isopropyltoluene	ND		ug/kg	86	11.	1
Naphthalene	820		ug/kg	430	12.	1
Acrylonitrile	ND		ug/kg	860	44.	1
n-Propylbenzene	ND		ug/kg	86	9.4	1
1,2,3-Trichlorobenzene	ND		ug/kg	430	13.	1
1,2,4-Trichlorobenzene	ND		ug/kg	430	16.	1
1,3,5-Trimethylbenzene	ND		ug/kg	430	12.	1

Project Name: MCGUINNESS BOULEVARD **Lab Number:** L1428173

Project Number: Not Specified **Report Date:** 12/02/14

SAMPLE RESULTS

Lab ID: L1428173-11 Date Collected: 11/20/14 15:20

Client ID: VHB SB-2 (0-2') Date Received: 11/21/14

Sample Location: 209-235 MCGUINESS BLVD. Field Prep: Not Specified

Parameter	Result	Qualifier	Units	RL	MDL	Dilution Factor
Volatile Organics by 8260/5035 - Westborough Lab						
1,2,4-Trimethylbenzene	ND		ug/kg	430	12.	1
1,4-Dioxane	ND		ug/kg	8600	1200	1
1,4-Diethylbenzene	ND		ug/kg	340	14.	1
4-Ethyltoluene	ND		ug/kg	340	11.	1
1,2,4,5-Tetramethylbenzene	ND		ug/kg	340	11.	1
Ethyl ether	ND		ug/kg	430	22.	1
trans-1,4-Dichloro-2-butene	ND		ug/kg	430	34.	1

Surrogate	% Recovery	Qualifier	Acceptance Criteria
1,2-Dichloroethane-d4	93		70-130
Toluene-d8	104		70-130
4-Bromofluorobenzene	107		70-130
Dibromofluoromethane	80		70-130

Project Name: MCGUINNESS BOULEVARD **Lab Number:** L1428173

Project Number: Not Specified **Report Date:** 12/02/14

SAMPLE RESULTS

Lab ID:	L1428173-12	Date Collected:	11/20/14 15:40
Client ID:	VHB SB-2 (14-16')	Date Received:	11/21/14
Sample Location:	209-235 MCGUINESS BLVD.	Field Prep:	Not Specified
Matrix:	Soil		
Analytical Method:	1,8260C		
Analytical Date:	11/25/14 12:20		
Analyst:	BN		
Percent Solids:	84%		

Parameter	Result	Qualifier	Units	RL	MDL	Dilution Factor
Volatile Organics by 8260/5035 - Westborough Lab						
Methylene chloride	ND		ug/kg	8.5	0.94	1
1,1-Dichloroethane	ND		ug/kg	1.3	0.07	1
Chloroform	ND		ug/kg	1.3	0.32	1
Carbon tetrachloride	ND		ug/kg	0.85	0.18	1
1,2-Dichloropropane	ND		ug/kg	3.0	0.19	1
Dibromochloromethane	ND		ug/kg	0.85	0.13	1
1,1,2-Trichloroethane	ND		ug/kg	1.3	0.26	1
Tetrachloroethene	ND		ug/kg	0.85	0.12	1
Chlorobenzene	ND		ug/kg	0.85	0.30	1
Trichlorofluoromethane	ND		ug/kg	4.2	0.33	1
1,2-Dichloroethane	ND		ug/kg	0.85	0.10	1
1,1,1-Trichloroethane	ND		ug/kg	0.85	0.09	1
Bromodichloromethane	ND		ug/kg	0.85	0.15	1
trans-1,3-Dichloropropene	ND		ug/kg	0.85	0.10	1
cis-1,3-Dichloropropene	ND		ug/kg	0.85	0.10	1
1,3-Dichloropropene, Total	ND		ug/kg	0.85	0.10	1
1,1-Dichloropropene	ND		ug/kg	4.2	0.12	1
Bromoform	ND		ug/kg	3.4	0.20	1
1,1,2,2-Tetrachloroethane	ND		ug/kg	0.85	0.09	1
Benzene	ND		ug/kg	0.85	0.10	1
Toluene	ND		ug/kg	1.3	0.16	1
Ethylbenzene	ND		ug/kg	0.85	0.11	1
Chloromethane	ND		ug/kg	4.2	0.25	1
Bromomethane	ND		ug/kg	1.7	0.29	1
Vinyl chloride	ND		ug/kg	1.7	0.10	1
Chloroethane	ND		ug/kg	1.7	0.27	1
1,1-Dichloroethene	ND		ug/kg	0.85	0.22	1
trans-1,2-Dichloroethene	ND		ug/kg	1.3	0.18	1
Trichloroethene	ND		ug/kg	0.85	0.11	1
1,2-Dichlorobenzene	ND		ug/kg	4.2	0.13	1

Project Name: MCGUINNESS BOULEVARD **Lab Number:** L1428173

Project Number: Not Specified **Report Date:** 12/02/14

SAMPLE RESULTS

Lab ID: L1428173-12 Date Collected: 11/20/14 15:40

Client ID: VHB SB-2 (14-16') Date Received: 11/21/14

Sample Location: 209-235 MCGUINESS BLVD. Field Prep: Not Specified

Parameter	Result	Qualifier	Units	RL	MDL	Dilution Factor
Volatile Organics by 8260/5035 - Westborough Lab						
1,3-Dichlorobenzene	ND		ug/kg	4.2	0.11	1
1,4-Dichlorobenzene	0.19	J	ug/kg	4.2	0.12	1
Methyl tert butyl ether	ND		ug/kg	1.7	0.07	1
p/m-Xylene	ND		ug/kg	1.7	0.17	1
o-Xylene	ND		ug/kg	1.7	0.15	1
Xylene (Total)	ND		ug/kg	1.7	0.15	1
cis-1,2-Dichloroethene	ND		ug/kg	0.85	0.12	1
1,2-Dichloroethene (total)	ND		ug/kg	0.85	0.12	1
Dibromomethane	ND		ug/kg	8.5	0.14	1
Styrene	ND		ug/kg	1.7	0.34	1
Dichlorodifluoromethane	ND		ug/kg	8.5	0.16	1
Acetone	26		ug/kg	8.5	0.88	1
Carbon disulfide	ND		ug/kg	8.5	0.94	1
2-Butanone	2.2	J	ug/kg	8.5	0.23	1
Vinyl acetate	ND		ug/kg	8.5	0.11	1
4-Methyl-2-pentanone	ND		ug/kg	8.5	0.21	1
1,2,3-Trichloropropane	ND		ug/kg	8.5	0.14	1
2-Hexanone	ND		ug/kg	8.5	0.57	1
Bromochloromethane	ND		ug/kg	4.2	0.23	1
2,2-Dichloropropane	ND		ug/kg	4.2	0.19	1
1,2-Dibromoethane	ND		ug/kg	3.4	0.15	1
1,3-Dichloropropane	ND		ug/kg	4.2	0.12	1
1,1,1,2-Tetrachloroethane	ND		ug/kg	0.85	0.27	1
Bromobenzene	ND		ug/kg	4.2	0.18	1
n-Butylbenzene	ND		ug/kg	0.85	0.10	1
sec-Butylbenzene	ND		ug/kg	0.85	0.10	1
tert-Butylbenzene	0.31	J	ug/kg	4.2	0.12	1
o-Chlorotoluene	ND		ug/kg	4.2	0.14	1
p-Chlorotoluene	ND		ug/kg	4.2	0.11	1
1,2-Dibromo-3-chloropropane	ND		ug/kg	4.2	0.34	1
Hexachlorobutadiene	ND		ug/kg	4.2	0.19	1
Isopropylbenzene	ND		ug/kg	0.85	0.09	1
p-Isopropyltoluene	ND		ug/kg	0.85	0.11	1
Naphthalene	ND		ug/kg	4.2	0.12	1
Acrylonitrile	ND		ug/kg	8.5	0.44	1
n-Propylbenzene	ND		ug/kg	0.85	0.09	1
1,2,3-Trichlorobenzene	ND		ug/kg	4.2	0.12	1
1,2,4-Trichlorobenzene	ND		ug/kg	4.2	0.15	1
1,3,5-Trimethylbenzene	ND		ug/kg	4.2	0.12	1

Project Name: MCGUINNESS BOULEVARD **Lab Number:** L1428173

Project Number: Not Specified **Report Date:** 12/02/14

SAMPLE RESULTS

Lab ID: L1428173-12 Date Collected: 11/20/14 15:40

Client ID: VHB SB-2 (14-16') Date Received: 11/21/14

Sample Location: 209-235 MCGUINESS BLVD. Field Prep: Not Specified

Parameter	Result	Qualifier	Units	RL	MDL	Dilution Factor
Volatile Organics by 8260/5035 - Westborough Lab						
1,2,4-Trimethylbenzene	ND		ug/kg	4.2	0.12	1
1,4-Dioxane	ND		ug/kg	85	12.	1
1,4-Diethylbenzene	ND		ug/kg	3.4	0.14	1
4-Ethyltoluene	ND		ug/kg	3.4	0.10	1
1,2,4,5-Tetramethylbenzene	ND		ug/kg	3.4	0.11	1
Ethyl ether	ND		ug/kg	4.2	0.22	1
trans-1,4-Dichloro-2-butene	ND		ug/kg	4.2	0.33	1

Surrogate	% Recovery	Qualifier	Acceptance Criteria
1,2-Dichloroethane-d4	104		70-130
Toluene-d8	98		70-130
4-Bromofluorobenzene	108		70-130
Dibromofluoromethane	100		70-130

Project Name: MCGUINNESS BOULEVARD **Lab Number:** L1428173

Project Number: Not Specified **Report Date:** 12/02/14

Method Blank Analysis
Batch Quality Control

Analytical Method: 1,8260C
Analytical Date: 11/24/14 09:00
Analyst: BN

Parameter	Result	Qualifier	Units	RL	MDL
Volatile Organics by 8260/5035 - Westborough Lab for sample(s): 05,09-11 Batch: WG743236-6					
Methylene chloride	ND		ug/kg	500	55.
1,1-Dichloroethane	ND		ug/kg	75	4.3
Chloroform	ND		ug/kg	75	18.
Carbon tetrachloride	ND		ug/kg	50	10.
1,2-Dichloropropane	ND		ug/kg	180	11.
Dibromochloromethane	ND		ug/kg	50	7.7
2-Chloroethylvinyl ether	ND		ug/kg	1000	31.
1,1,2-Trichloroethane	ND		ug/kg	75	15.
Tetrachloroethene	ND		ug/kg	50	7.0
Chlorobenzene	ND		ug/kg	50	17.
Trichlorofluoromethane	ND		ug/kg	250	19.
1,2-Dichloroethane	ND		ug/kg	50	5.7
1,1,1-Trichloroethane	ND		ug/kg	50	5.5
Bromodichloromethane	ND		ug/kg	50	8.7
trans-1,3-Dichloropropene	ND		ug/kg	50	6.0
cis-1,3-Dichloropropene	ND		ug/kg	50	5.9
1,3-Dichloropropene, Total	ND		ug/kg	50	5.9
1,1-Dichloropropene	ND		ug/kg	250	7.1
Bromoform	ND		ug/kg	200	12.
1,1,2,2-Tetrachloroethane	ND		ug/kg	50	5.0
Benzene	ND		ug/kg	50	5.9
Toluene	ND		ug/kg	75	9.7
Ethylbenzene	ND		ug/kg	50	6.4
Chloromethane	ND		ug/kg	250	15.
Bromomethane	ND		ug/kg	100	17.
Vinyl chloride	ND		ug/kg	100	5.9
Chloroethane	ND		ug/kg	100	16.
1,1-Dichloroethene	ND		ug/kg	50	13.
trans-1,2-Dichloroethene	ND		ug/kg	75	11.

Project Name: MCGUINNESS BOULEVARD **Lab Number:** L1428173

Project Number: Not Specified **Report Date:** 12/02/14

Method Blank Analysis
Batch Quality Control

Analytical Method: 1,8260C
Analytical Date: 11/24/14 09:00
Analyst: BN

Parameter	Result	Qualifier	Units	RL	MDL
Volatile Organics by 8260/5035 - Westborough Lab for sample(s): 05,09-11 Batch: WG743236-6					
Trichloroethene	ND		ug/kg	50	6.2
1,2-Dichlorobenzene	ND		ug/kg	250	7.7
1,3-Dichlorobenzene	ND		ug/kg	250	6.8
1,4-Dichlorobenzene	ND		ug/kg	250	6.9
Methyl tert butyl ether	ND		ug/kg	100	4.2
p/m-Xylene	ND		ug/kg	100	9.9
o-Xylene	ND		ug/kg	100	8.6
Xylene (Total)	ND		ug/kg	100	8.6
cis-1,2-Dichloroethene	ND		ug/kg	50	7.1
1,2-Dichloroethene (total)	ND		ug/kg	50	7.1
Dibromomethane	ND		ug/kg	500	8.2
Styrene	ND		ug/kg	100	20.
Dichlorodifluoromethane	ND		ug/kg	500	9.5
Acetone	ND		ug/kg	500	52.
Carbon disulfide	ND		ug/kg	500	55.
2-Butanone	ND		ug/kg	500	14.
Vinyl acetate	ND		ug/kg	500	6.6
4-Methyl-2-pentanone	ND		ug/kg	500	12.
1,2,3-Trichloropropane	ND		ug/kg	500	8.1
2-Hexanone	ND		ug/kg	500	33.
Bromochloromethane	ND		ug/kg	250	14.
2,2-Dichloropropane	ND		ug/kg	250	11.
1,2-Dibromoethane	ND		ug/kg	200	8.7
1,3-Dichloropropane	ND		ug/kg	250	7.3
1,1,1,2-Tetrachloroethane	ND		ug/kg	50	16.
Bromobenzene	ND		ug/kg	250	10.
n-Butylbenzene	ND		ug/kg	50	5.7
sec-Butylbenzene	ND		ug/kg	50	6.1
tert-Butylbenzene	ND		ug/kg	250	6.8

Project Name: MCGUINNESS BOULEVARD **Lab Number:** L1428173

Project Number: Not Specified **Report Date:** 12/02/14

Method Blank Analysis
Batch Quality Control

Analytical Method: 1,8260C
Analytical Date: 11/24/14 09:00
Analyst: BN

Parameter	Result	Qualifier	Units	RL	MDL
Volatile Organics by 8260/5035 - Westborough Lab for sample(s): 05,09-11 Batch: WG743236-6					
o-Chlorotoluene	ND		ug/kg	250	8.0
p-Chlorotoluene	ND		ug/kg	250	6.6
1,2-Dibromo-3-chloropropane	ND		ug/kg	250	20.
Hexachlorobutadiene	ND		ug/kg	250	11.
Isopropylbenzene	ND		ug/kg	50	5.2
p-Isopropyltoluene	ND		ug/kg	50	6.2
Naphthalene	ND		ug/kg	250	6.9
Acrylonitrile	ND		ug/kg	500	26.
Isopropyl Ether	ND		ug/kg	200	7.0
tert-Butyl Alcohol	ND		ug/kg	3000	150
n-Propylbenzene	ND		ug/kg	50	5.5
1,2,3-Trichlorobenzene	ND		ug/kg	250	7.4
1,2,4-Trichlorobenzene	ND		ug/kg	250	9.1
1,3,5-Trimethylbenzene	ND		ug/kg	250	7.2
1,2,4-Trimethylbenzene	ND		ug/kg	250	7.1
Methyl Acetate	ND		ug/kg	1000	14.
Ethyl Acetate	ND		ug/kg	1000	46.
Acrolein	ND		ug/kg	1200	400
Cyclohexane	ND		ug/kg	1000	7.3
1,4-Dioxane	ND		ug/kg	5000	720
1,1,2-Trichloro-1,2,2-Trifluoroethane	ND		ug/kg	1000	14.
1,4-Diethylbenzene	ND		ug/kg	200	8.0
4-Ethyltoluene	ND		ug/kg	200	6.2
1,2,4,5-Tetramethylbenzene	ND		ug/kg	200	6.5
Tetrahydrofuran	ND		ug/kg	1000	50.
Ethyl ether	ND		ug/kg	250	13.
trans-1,4-Dichloro-2-butene	ND		ug/kg	250	20.
Methyl cyclohexane	ND		ug/kg	200	7.7
Ethyl-Tert-Butyl-Ether	ND		ug/kg	200	5.8

Project Name: MCGUINNESS BOULEVARD **Lab Number:** L1428173

Project Number: Not Specified **Report Date:** 12/02/14

Method Blank Analysis
Batch Quality Control

Analytical Method: 1,8260C
Analytical Date: 11/24/14 09:00
Analyst: BN

Parameter	Result	Qualifier	Units	RL	MDL
Volatile Organics by 8260/5035 - Westborough Lab for sample(s): 05,09-11 Batch: WG743236-6					
Tertiary-Amyl Methyl Ether	ND		ug/kg	200	4.8

Surrogate	%Recovery	Qualifier	Acceptance Criteria
1,2-Dichloroethane-d4	100		70-130
Toluene-d8	104		70-130
4-Bromofluorobenzene	106		70-130
Dibromofluoromethane	86		70-130

Project Name: MCGUINNESS BOULEVARD **Lab Number:** L1428173

Project Number: Not Specified **Report Date:** 12/02/14

Method Blank Analysis
Batch Quality Control

Analytical Method: 1,8260C
Analytical Date: 11/24/14 08:56
Analyst: BN

Parameter	Result	Qualifier	Units	RL	MDL
Volatile Organics by 8260/5035 - Westborough Lab for sample(s): 02 Batch: WG743592-3					
Methylene chloride	ND		ug/kg	10	1.1
1,1-Dichloroethane	ND		ug/kg	1.5	0.09
Chloroform	ND		ug/kg	1.5	0.37
Carbon tetrachloride	ND		ug/kg	1.0	0.21
1,2-Dichloropropane	ND		ug/kg	3.5	0.23
Dibromochloromethane	ND		ug/kg	1.0	0.15
2-Chloroethylvinyl ether	ND		ug/kg	20	0.62
1,1,2-Trichloroethane	ND		ug/kg	1.5	0.30
Tetrachloroethene	ND		ug/kg	1.0	0.14
Chlorobenzene	ND		ug/kg	1.0	0.35
Trichlorofluoromethane	ND		ug/kg	5.0	0.39
1,2-Dichloroethane	ND		ug/kg	1.0	0.11
1,1,1-Trichloroethane	ND		ug/kg	1.0	0.11
Bromodichloromethane	ND		ug/kg	1.0	0.17
trans-1,3-Dichloropropene	ND		ug/kg	1.0	0.12
cis-1,3-Dichloropropene	ND		ug/kg	1.0	0.12
1,3-Dichloropropene, Total	ND		ug/kg	1.0	0.12
1,1-Dichloropropene	ND		ug/kg	5.0	0.14
Bromoform	ND		ug/kg	4.0	0.24
1,1,2,2-Tetrachloroethane	ND		ug/kg	1.0	0.10
Benzene	ND		ug/kg	1.0	0.12
Toluene	ND		ug/kg	1.5	0.19
Ethylbenzene	ND		ug/kg	1.0	0.13
Chloromethane	ND		ug/kg	5.0	0.29
Bromomethane	ND		ug/kg	2.0	0.34
Vinyl chloride	ND		ug/kg	2.0	0.12
Chloroethane	ND		ug/kg	2.0	0.32
1,1-Dichloroethene	ND		ug/kg	1.0	0.26
trans-1,2-Dichloroethene	ND		ug/kg	1.5	0.21

Project Name: MCGUINNESS BOULEVARD **Lab Number:** L1428173

Project Number: Not Specified **Report Date:** 12/02/14

Method Blank Analysis
Batch Quality Control

Analytical Method: 1,8260C
Analytical Date: 11/24/14 08:56
Analyst: BN

Parameter	Result	Qualifier	Units	RL	MDL
Volatile Organics by 8260/5035 - Westborough Lab for sample(s): 02 Batch: WG743592-3					
Trichloroethene	ND		ug/kg	1.0	0.12
1,2-Dichlorobenzene	ND		ug/kg	5.0	0.15
1,3-Dichlorobenzene	ND		ug/kg	5.0	0.14
1,4-Dichlorobenzene	ND		ug/kg	5.0	0.14
Methyl tert butyl ether	ND		ug/kg	2.0	0.08
p/m-Xylene	ND		ug/kg	2.0	0.20
o-Xylene	ND		ug/kg	2.0	0.17
Xylene (Total)	ND		ug/kg	2.0	0.17
cis-1,2-Dichloroethene	ND		ug/kg	1.0	0.14
1,2-Dichloroethene (total)	ND		ug/kg	1.0	0.14
Dibromomethane	ND		ug/kg	10	0.16
Styrene	ND		ug/kg	2.0	0.40
Dichlorodifluoromethane	ND		ug/kg	10	0.19
Acetone	ND		ug/kg	10	1.0
Carbon disulfide	ND		ug/kg	10	1.1
2-Butanone	ND		ug/kg	10	0.27
Vinyl acetate	ND		ug/kg	10	0.13
4-Methyl-2-pentanone	ND		ug/kg	10	0.24
1,2,3-Trichloropropane	ND		ug/kg	10	0.16
2-Hexanone	ND		ug/kg	10	0.67
Bromochloromethane	ND		ug/kg	5.0	0.28
2,2-Dichloropropane	ND		ug/kg	5.0	0.23
1,2-Dibromoethane	ND		ug/kg	4.0	0.17
1,3-Dichloropropane	ND		ug/kg	5.0	0.14
1,1,1,2-Tetrachloroethane	ND		ug/kg	1.0	0.32
Bromobenzene	ND		ug/kg	5.0	0.21
n-Butylbenzene	ND		ug/kg	1.0	0.11
sec-Butylbenzene	ND		ug/kg	1.0	0.12
tert-Butylbenzene	ND		ug/kg	5.0	0.14

Project Name: MCGUINNESS BOULEVARD **Lab Number:** L1428173

Project Number: Not Specified **Report Date:** 12/02/14

Method Blank Analysis
Batch Quality Control

Analytical Method: 1,8260C
Analytical Date: 11/24/14 08:56
Analyst: BN

Parameter	Result	Qualifier	Units	RL	MDL
Volatile Organics by 8260/5035 - Westborough Lab for sample(s): 02 Batch: WG743592-3					
o-Chlorotoluene	ND		ug/kg	5.0	0.16
p-Chlorotoluene	ND		ug/kg	5.0	0.13
1,2-Dibromo-3-chloropropane	ND		ug/kg	5.0	0.40
Hexachlorobutadiene	ND		ug/kg	5.0	0.23
Isopropylbenzene	ND		ug/kg	1.0	0.10
p-Isopropyltoluene	ND		ug/kg	1.0	0.12
Naphthalene	ND		ug/kg	5.0	0.14
Acrylonitrile	ND		ug/kg	10	0.51
Isopropyl Ether	ND		ug/kg	4.0	0.14
tert-Butyl Alcohol	ND		ug/kg	60	2.9
n-Propylbenzene	ND		ug/kg	1.0	0.11
1,2,3-Trichlorobenzene	ND		ug/kg	5.0	0.15
1,2,4-Trichlorobenzene	ND		ug/kg	5.0	0.18
1,3,5-Trimethylbenzene	ND		ug/kg	5.0	0.14
1,2,4-Trimethylbenzene	ND		ug/kg	5.0	0.14
Methyl Acetate	ND		ug/kg	20	0.27
Ethyl Acetate	ND		ug/kg	20	0.92
Acrolein	ND		ug/kg	25	8.1
Cyclohexane	ND		ug/kg	20	0.15
1,4-Dioxane	ND		ug/kg	100	14.
1,1,2-Trichloro-1,2,2-Trifluoroethane	ND		ug/kg	20	0.27
1,4-Diethylbenzene	ND		ug/kg	4.0	0.16
4-Ethyltoluene	ND		ug/kg	4.0	0.12
1,2,4,5-Tetramethylbenzene	ND		ug/kg	4.0	0.13
Tetrahydrofuran	ND		ug/kg	20	1.0
Ethyl ether	ND		ug/kg	5.0	0.26
trans-1,4-Dichloro-2-butene	ND		ug/kg	5.0	0.39
Methyl cyclohexane	ND		ug/kg	4.0	0.15
Ethyl-Tert-Butyl-Ether	ND		ug/kg	4.0	0.12

Project Name: MCGUINNESS BOULEVARD **Lab Number:** L1428173

Project Number: Not Specified **Report Date:** 12/02/14

Method Blank Analysis
Batch Quality Control

Analytical Method: 1,8260C
Analytical Date: 11/24/14 08:56
Analyst: BN

Parameter	Result	Qualifier	Units	RL	MDL
Volatile Organics by 8260/5035 - Westborough Lab for sample(s): 02 Batch: WG743592-3					
Tertiary-Amyl Methyl Ether	ND		ug/kg	4.0	0.10

Surrogate	%Recovery	Qualifier	Acceptance Criteria
1,2-Dichloroethane-d4	98		70-130
Toluene-d8	94		70-130
4-Bromofluorobenzene	94		70-130
Dibromofluoromethane	93		70-130

Project Name: MCGUINNESS BOULEVARD **Lab Number:** L1428173

Project Number: Not Specified **Report Date:** 12/02/14

Method Blank Analysis
Batch Quality Control

Analytical Method: 1,8260C
Analytical Date: 11/25/14 08:55
Analyst: BN

Parameter	Result	Qualifier	Units	RL	MDL
Volatile Organics by 8260/5035 - Westborough Lab for sample(s): 01,03-04,06-07,12 Batch: WG743731-3					
Methylene chloride	ND		ug/kg	10	1.1
1,1-Dichloroethane	ND		ug/kg	1.5	0.09
Chloroform	ND		ug/kg	1.5	0.37
Carbon tetrachloride	ND		ug/kg	1.0	0.21
1,2-Dichloropropane	ND		ug/kg	3.5	0.23
Dibromochloromethane	ND		ug/kg	1.0	0.15
2-Chloroethylvinyl ether	ND		ug/kg	20	0.62
1,1,2-Trichloroethane	ND		ug/kg	1.5	0.30
Tetrachloroethene	ND		ug/kg	1.0	0.14
Chlorobenzene	ND		ug/kg	1.0	0.35
Trichlorofluoromethane	ND		ug/kg	5.0	0.39
1,2-Dichloroethane	ND		ug/kg	1.0	0.11
1,1,1-Trichloroethane	ND		ug/kg	1.0	0.11
Bromodichloromethane	ND		ug/kg	1.0	0.17
trans-1,3-Dichloropropene	ND		ug/kg	1.0	0.12
cis-1,3-Dichloropropene	ND		ug/kg	1.0	0.12
1,3-Dichloropropene, Total	ND		ug/kg	1.0	0.12
1,1-Dichloropropene	ND		ug/kg	5.0	0.14
Bromoform	ND		ug/kg	4.0	0.24
1,1,2,2-Tetrachloroethane	ND		ug/kg	1.0	0.10
Benzene	ND		ug/kg	1.0	0.12
Toluene	ND		ug/kg	1.5	0.19
Ethylbenzene	ND		ug/kg	1.0	0.13
Chloromethane	ND		ug/kg	5.0	0.29
Bromomethane	0.56	J	ug/kg	2.0	0.34
Vinyl chloride	ND		ug/kg	2.0	0.12
Chloroethane	ND		ug/kg	2.0	0.32
1,1-Dichloroethene	ND		ug/kg	1.0	0.26
trans-1,2-Dichloroethene	ND		ug/kg	1.5	0.21

Project Name: MCGUINNESS BOULEVARD **Lab Number:** L1428173

Project Number: Not Specified **Report Date:** 12/02/14

Method Blank Analysis
Batch Quality Control

Analytical Method: 1,8260C
Analytical Date: 11/25/14 08:55
Analyst: BN

Parameter	Result	Qualifier	Units	RL	MDL
Volatile Organics by 8260/5035 - Westborough Lab for sample(s): 01,03-04,06-07,12 Batch: WG743731-3					
Trichloroethene	ND		ug/kg	1.0	0.12
1,2-Dichlorobenzene	ND		ug/kg	5.0	0.15
1,3-Dichlorobenzene	ND		ug/kg	5.0	0.14
1,4-Dichlorobenzene	ND		ug/kg	5.0	0.14
Methyl tert butyl ether	ND		ug/kg	2.0	0.08
p/m-Xylene	ND		ug/kg	2.0	0.20
o-Xylene	ND		ug/kg	2.0	0.17
Xylene (Total)	ND		ug/kg	2.0	0.17
cis-1,2-Dichloroethene	ND		ug/kg	1.0	0.14
1,2-Dichloroethene (total)	ND		ug/kg	1.0	0.14
Dibromomethane	ND		ug/kg	10	0.16
Styrene	ND		ug/kg	2.0	0.40
Dichlorodifluoromethane	ND		ug/kg	10	0.19
Acetone	ND		ug/kg	10	1.0
Carbon disulfide	ND		ug/kg	10	1.1
2-Butanone	ND		ug/kg	10	0.27
Vinyl acetate	ND		ug/kg	10	0.13
4-Methyl-2-pentanone	ND		ug/kg	10	0.24
1,2,3-Trichloropropane	ND		ug/kg	10	0.16
2-Hexanone	ND		ug/kg	10	0.67
Bromochloromethane	ND		ug/kg	5.0	0.28
2,2-Dichloropropane	ND		ug/kg	5.0	0.23
1,2-Dibromoethane	ND		ug/kg	4.0	0.17
1,3-Dichloropropane	ND		ug/kg	5.0	0.14
1,1,1,2-Tetrachloroethane	ND		ug/kg	1.0	0.32
Bromobenzene	ND		ug/kg	5.0	0.21
n-Butylbenzene	ND		ug/kg	1.0	0.11
sec-Butylbenzene	ND		ug/kg	1.0	0.12
tert-Butylbenzene	ND		ug/kg	5.0	0.14

Project Name: MCGUINNESS BOULEVARD **Lab Number:** L1428173

Project Number: Not Specified **Report Date:** 12/02/14

Method Blank Analysis
Batch Quality Control

Analytical Method: 1,8260C
Analytical Date: 11/25/14 08:55
Analyst: BN

Parameter	Result	Qualifier	Units	RL	MDL
Volatile Organics by 8260/5035 - Westborough Lab for sample(s): 01,03-04,06-07,12 Batch: WG743731-3					
o-Chlorotoluene	ND		ug/kg	5.0	0.16
p-Chlorotoluene	ND		ug/kg	5.0	0.13
1,2-Dibromo-3-chloropropane	ND		ug/kg	5.0	0.40
Hexachlorobutadiene	ND		ug/kg	5.0	0.23
Isopropylbenzene	ND		ug/kg	1.0	0.10
p-Isopropyltoluene	ND		ug/kg	1.0	0.12
Naphthalene	ND		ug/kg	5.0	0.14
Acrylonitrile	ND		ug/kg	10	0.51
Isopropyl Ether	ND		ug/kg	4.0	0.14
tert-Butyl Alcohol	ND		ug/kg	60	2.9
n-Propylbenzene	ND		ug/kg	1.0	0.11
1,2,3-Trichlorobenzene	ND		ug/kg	5.0	0.15
1,2,4-Trichlorobenzene	ND		ug/kg	5.0	0.18
1,3,5-Trimethylbenzene	ND		ug/kg	5.0	0.14
1,2,4-Trimethylbenzene	ND		ug/kg	5.0	0.14
Methyl Acetate	ND		ug/kg	20	0.27
Ethyl Acetate	ND		ug/kg	20	0.92
Acrolein	ND		ug/kg	25	8.1
Cyclohexane	ND		ug/kg	20	0.15
1,4-Dioxane	ND		ug/kg	100	14.
1,1,2-Trichloro-1,2,2-Trifluoroethane	ND		ug/kg	20	0.27
1,4-Diethylbenzene	ND		ug/kg	4.0	0.16
4-Ethyltoluene	ND		ug/kg	4.0	0.12
1,2,4,5-Tetramethylbenzene	ND		ug/kg	4.0	0.13
Tetrahydrofuran	ND		ug/kg	20	1.0
Ethyl ether	ND		ug/kg	5.0	0.26
trans-1,4-Dichloro-2-butene	ND		ug/kg	5.0	0.39
Methyl cyclohexane	ND		ug/kg	4.0	0.15
Ethyl-Tert-Butyl-Ether	ND		ug/kg	4.0	0.12

Project Name: MCGUINNESS BOULEVARD **Lab Number:** L1428173

Project Number: Not Specified **Report Date:** 12/02/14

Method Blank Analysis
Batch Quality Control

Analytical Method: 1,8260C
Analytical Date: 11/25/14 08:55
Analyst: BN

Parameter	Result	Qualifier	Units	RL	MDL
Volatile Organics by 8260/5035 - Westborough Lab for sample(s): 01,03-04,06-07,12 Batch: WG743731-3					
Tertiary-Amyl Methyl Ether	ND		ug/kg	4.0	0.10

Tentatively Identified Compounds			
No Tentatively Identified Compounds	ND		ug/kg

Surrogate	%Recovery	Qualifier	Acceptance Criteria
1,2-Dichloroethane-d4	97		70-130
Toluene-d8	100		70-130
4-Bromofluorobenzene	96		70-130
Dibromofluoromethane	93		70-130

Project Name: MCGUINNESS BOULEVARD **Lab Number:** L1428173

Project Number: Not Specified **Report Date:** 12/02/14

Method Blank Analysis
Batch Quality Control

Analytical Method: 1,8260C
Analytical Date: 11/30/14 10:16
Analyst: BN

Parameter	Result	Qualifier	Units	RL	MDL
Volatile Organics by 8260/5035 - Westborough Lab for sample(s): 03 Batch: WG743731-6					
Methylene chloride	ND		ug/kg	10	1.1
1,1-Dichloroethane	ND		ug/kg	1.5	0.09
Chloroform	ND		ug/kg	1.5	0.37
Carbon tetrachloride	ND		ug/kg	1.0	0.21
1,2-Dichloropropane	ND		ug/kg	3.5	0.23
Dibromochloromethane	ND		ug/kg	1.0	0.15
2-Chloroethylvinyl ether	ND		ug/kg	20	0.62
1,1,2-Trichloroethane	ND		ug/kg	1.5	0.30
Tetrachloroethene	ND		ug/kg	1.0	0.14
Chlorobenzene	ND		ug/kg	1.0	0.35
Trichlorofluoromethane	ND		ug/kg	5.0	0.39
1,2-Dichloroethane	ND		ug/kg	1.0	0.11
1,1,1-Trichloroethane	ND		ug/kg	1.0	0.11
Bromodichloromethane	ND		ug/kg	1.0	0.17
trans-1,3-Dichloropropene	ND		ug/kg	1.0	0.12
cis-1,3-Dichloropropene	ND		ug/kg	1.0	0.12
1,3-Dichloropropene, Total	ND		ug/kg	1.0	0.12
1,1-Dichloropropene	ND		ug/kg	5.0	0.14
Bromoform	ND		ug/kg	4.0	0.24
1,1,2,2-Tetrachloroethane	ND		ug/kg	1.0	0.10
Benzene	ND		ug/kg	1.0	0.12
Toluene	ND		ug/kg	1.5	0.19
Ethylbenzene	ND		ug/kg	1.0	0.13
Chloromethane	ND		ug/kg	5.0	0.29
Bromomethane	ND		ug/kg	2.0	0.34
Vinyl chloride	ND		ug/kg	2.0	0.12
Chloroethane	ND		ug/kg	2.0	0.32
1,1-Dichloroethene	ND		ug/kg	1.0	0.26
trans-1,2-Dichloroethene	ND		ug/kg	1.5	0.21

Project Name: MCGUINNESS BOULEVARD **Lab Number:** L1428173

Project Number: Not Specified **Report Date:** 12/02/14

Method Blank Analysis
Batch Quality Control

Analytical Method: 1,8260C
Analytical Date: 11/30/14 10:16
Analyst: BN

Parameter	Result	Qualifier	Units	RL	MDL
Volatile Organics by 8260/5035 - Westborough Lab for sample(s): 03 Batch: WG743731-6					
Trichloroethene	ND		ug/kg	1.0	0.12
1,2-Dichlorobenzene	ND		ug/kg	5.0	0.15
1,3-Dichlorobenzene	ND		ug/kg	5.0	0.14
1,4-Dichlorobenzene	ND		ug/kg	5.0	0.14
Methyl tert butyl ether	ND		ug/kg	2.0	0.08
p/m-Xylene	ND		ug/kg	2.0	0.20
o-Xylene	ND		ug/kg	2.0	0.17
Xylene (Total)	ND		ug/kg	2.0	0.17
cis-1,2-Dichloroethene	ND		ug/kg	1.0	0.14
1,2-Dichloroethene (total)	ND		ug/kg	1.0	0.14
Dibromomethane	ND		ug/kg	10	0.16
Styrene	ND		ug/kg	2.0	0.40
Dichlorodifluoromethane	ND		ug/kg	10	0.19
Acetone	ND		ug/kg	10	1.0
Carbon disulfide	ND		ug/kg	10	1.1
2-Butanone	ND		ug/kg	10	0.27
Vinyl acetate	ND		ug/kg	10	0.13
4-Methyl-2-pentanone	ND		ug/kg	10	0.24
1,2,3-Trichloropropane	ND		ug/kg	10	0.16
2-Hexanone	ND		ug/kg	10	0.67
Bromochloromethane	ND		ug/kg	5.0	0.28
2,2-Dichloropropane	ND		ug/kg	5.0	0.23
1,2-Dibromoethane	ND		ug/kg	4.0	0.17
1,3-Dichloropropane	ND		ug/kg	5.0	0.14
1,1,1,2-Tetrachloroethane	ND		ug/kg	1.0	0.32
Bromobenzene	ND		ug/kg	5.0	0.21
n-Butylbenzene	ND		ug/kg	1.0	0.11
sec-Butylbenzene	ND		ug/kg	1.0	0.12
tert-Butylbenzene	ND		ug/kg	5.0	0.14

Project Name: MCGUINNESS BOULEVARD **Lab Number:** L1428173

Project Number: Not Specified **Report Date:** 12/02/14

Method Blank Analysis
Batch Quality Control

Analytical Method: 1,8260C
Analytical Date: 11/30/14 10:16
Analyst: BN

Parameter	Result	Qualifier	Units	RL	MDL
Volatile Organics by 8260/5035 - Westborough Lab for sample(s): 03 Batch: WG743731-6					
o-Chlorotoluene	ND		ug/kg	5.0	0.16
p-Chlorotoluene	ND		ug/kg	5.0	0.13
1,2-Dibromo-3-chloropropane	ND		ug/kg	5.0	0.40
Hexachlorobutadiene	ND		ug/kg	5.0	0.23
Isopropylbenzene	ND		ug/kg	1.0	0.10
p-Isopropyltoluene	ND		ug/kg	1.0	0.12
Naphthalene	ND		ug/kg	5.0	0.14
Acrylonitrile	ND		ug/kg	10	0.51
Isopropyl Ether	ND		ug/kg	4.0	0.14
tert-Butyl Alcohol	ND		ug/kg	60	2.9
n-Propylbenzene	ND		ug/kg	1.0	0.11
1,2,3-Trichlorobenzene	ND		ug/kg	5.0	0.15
1,2,4-Trichlorobenzene	ND		ug/kg	5.0	0.18
1,3,5-Trimethylbenzene	ND		ug/kg	5.0	0.14
1,2,4-Trimethylbenzene	ND		ug/kg	5.0	0.14
Methyl Acetate	ND		ug/kg	20	0.27
Ethyl Acetate	ND		ug/kg	20	0.92
Acrolein	ND		ug/kg	25	8.1
Cyclohexane	ND		ug/kg	20	0.15
1,4-Dioxane	ND		ug/kg	100	14.
1,1,2-Trichloro-1,2,2-Trifluoroethane	ND		ug/kg	20	0.27
1,4-Diethylbenzene	ND		ug/kg	4.0	0.16
4-Ethyltoluene	ND		ug/kg	4.0	0.12
1,2,4,5-Tetramethylbenzene	ND		ug/kg	4.0	0.13
Tetrahydrofuran	ND		ug/kg	20	1.0
Ethyl ether	ND		ug/kg	5.0	0.26
trans-1,4-Dichloro-2-butene	ND		ug/kg	5.0	0.39
Methyl cyclohexane	ND		ug/kg	4.0	0.15
Ethyl-Tert-Butyl-Ether	ND		ug/kg	4.0	0.12

Project Name: MCGUINNESS BOULEVARD **Lab Number:** L1428173

Project Number: Not Specified **Report Date:** 12/02/14

Method Blank Analysis
Batch Quality Control

Analytical Method: 1,8260C
Analytical Date: 11/30/14 10:16
Analyst: BN

Parameter	Result	Qualifier	Units	RL	MDL
Volatile Organics by 8260/5035 - Westborough Lab for sample(s): 03 Batch: WG743731-6					
Tertiary-Amyl Methyl Ether	ND		ug/kg	4.0	0.10

Surrogate	%Recovery	Qualifier	Acceptance Criteria
1,2-Dichloroethane-d4	104		70-130
Toluene-d8	98		70-130
4-Bromofluorobenzene	95		70-130
Dibromofluoromethane	99		70-130

Project Name: MCGUINNESS BOULEVARD **Lab Number:** L1428173

Project Number: Not Specified **Report Date:** 12/02/14

Method Blank Analysis
Batch Quality Control

Analytical Method: 1,8260C
Analytical Date: 11/26/14 10:45
Analyst: PD

Parameter	Result	Qualifier	Units	RL	MDL
Volatile Organics by GC/MS - Westborough Lab for sample(s): 08 Batch: WG744156-3					
Methylene chloride	ND		ug/l	2.5	0.70
1,1-Dichloroethane	ND		ug/l	2.5	0.70
Chloroform	ND		ug/l	2.5	0.70
Carbon tetrachloride	ND		ug/l	0.50	0.13
1,2-Dichloropropane	ND		ug/l	1.0	0.13
Dibromochloromethane	ND		ug/l	0.50	0.15
1,1,2-Trichloroethane	ND		ug/l	1.5	0.50
Tetrachloroethene	ND		ug/l	0.50	0.18
Chlorobenzene	ND		ug/l	2.5	0.70
Trichlorofluoromethane	ND		ug/l	2.5	0.70
1,2-Dichloroethane	ND		ug/l	0.50	0.13
1,1,1-Trichloroethane	ND		ug/l	2.5	0.70
Bromodichloromethane	ND		ug/l	0.50	0.19
trans-1,3-Dichloropropene	ND		ug/l	0.50	0.16
cis-1,3-Dichloropropene	ND		ug/l	0.50	0.14
1,3-Dichloropropene, Total	ND		ug/l	0.50	0.14
1,1-Dichloropropene	ND		ug/l	2.5	0.70
Bromoform	ND		ug/l	2.0	0.65
1,1,2,2-Tetrachloroethane	ND		ug/l	0.50	0.14
Benzene	ND		ug/l	0.50	0.16
Toluene	ND		ug/l	2.5	0.70
Ethylbenzene	ND		ug/l	2.5	0.70
Chloromethane	ND		ug/l	2.5	0.70
Bromomethane	ND		ug/l	2.5	0.70
Vinyl chloride	ND		ug/l	1.0	0.33
Chloroethane	ND		ug/l	2.5	0.70
1,1-Dichloroethene	ND		ug/l	0.50	0.14
trans-1,2-Dichloroethene	ND		ug/l	2.5	0.70
Trichloroethene	ND		ug/l	0.50	0.18

Project Name: MCGUINNESS BOULEVARD **Lab Number:** L1428173

Project Number: Not Specified **Report Date:** 12/02/14

Method Blank Analysis
Batch Quality Control

Analytical Method: 1,8260C
Analytical Date: 11/26/14 10:45
Analyst: PD

Parameter	Result	Qualifier	Units	RL	MDL
Volatile Organics by GC/MS - Westborough Lab for sample(s): 08 Batch: WG744156-3					
1,2-Dichlorobenzene	ND		ug/l	2.5	0.70
1,3-Dichlorobenzene	ND		ug/l	2.5	0.70
1,4-Dichlorobenzene	ND		ug/l	2.5	0.70
Methyl tert butyl ether	ND		ug/l	2.5	0.70
p/m-Xylene	ND		ug/l	2.5	0.70
o-Xylene	ND		ug/l	2.5	0.70
Xylenes, Total	ND		ug/l	2.5	0.70
cis-1,2-Dichloroethene	ND		ug/l	2.5	0.70
1,2-Dichloroethene, Total	ND		ug/l	2.5	0.70
Dibromomethane	ND		ug/l	5.0	1.0
1,2,3-Trichloropropane	ND		ug/l	2.5	0.70
Acrylonitrile	ND		ug/l	5.0	1.5
Styrene	ND		ug/l	2.5	0.70
Dichlorodifluoromethane	ND		ug/l	5.0	1.0
Acetone	ND		ug/l	5.0	1.5
Carbon disulfide	ND		ug/l	5.0	1.0
2-Butanone	ND		ug/l	5.0	1.9
Vinyl acetate	ND		ug/l	5.0	1.0
4-Methyl-2-pentanone	ND		ug/l	5.0	1.0
2-Hexanone	ND		ug/l	5.0	1.0
Bromochloromethane	ND		ug/l	2.5	0.70
2,2-Dichloropropane	ND		ug/l	2.5	0.70
1,2-Dibromoethane	ND		ug/l	2.0	0.65
1,3-Dichloropropane	ND		ug/l	2.5	0.70
1,1,1,2-Tetrachloroethane	ND		ug/l	2.5	0.70
Bromobenzene	ND		ug/l	2.5	0.70
n-Butylbenzene	ND		ug/l	2.5	0.70
sec-Butylbenzene	ND		ug/l	2.5	0.70
tert-Butylbenzene	ND		ug/l	2.5	0.70

Project Name: MCGUINNESS BOULEVARD **Lab Number:** L1428173

Project Number: Not Specified **Report Date:** 12/02/14

Method Blank Analysis
Batch Quality Control

Analytical Method: 1,8260C
Analytical Date: 11/26/14 10:45
Analyst: PD

Parameter	Result	Qualifier	Units	RL	MDL
Volatile Organics by GC/MS - Westborough Lab for sample(s): 08 Batch: WG744156-3					
o-Chlorotoluene	ND		ug/l	2.5	0.70
p-Chlorotoluene	ND		ug/l	2.5	0.70
1,2-Dibromo-3-chloropropane	ND		ug/l	2.5	0.70
Hexachlorobutadiene	ND		ug/l	2.5	0.70
Isopropylbenzene	ND		ug/l	2.5	0.70
p-Isopropyltoluene	ND		ug/l	2.5	0.70
Naphthalene	ND		ug/l	2.5	0.70
n-Propylbenzene	ND		ug/l	2.5	0.70
1,2,3-Trichlorobenzene	ND		ug/l	2.5	0.70
1,2,4-Trichlorobenzene	ND		ug/l	2.5	0.70
1,3,5-Trimethylbenzene	ND		ug/l	2.5	0.70
1,2,4-Trimethylbenzene	ND		ug/l	2.5	0.70
1,4-Dioxane	ND		ug/l	250	41.
p-Diethylbenzene	ND		ug/l	2.0	0.70
p-Ethyltoluene	ND		ug/l	2.0	0.70
1,2,4,5-Tetramethylbenzene	ND		ug/l	2.0	0.65
Ethyl ether	ND		ug/l	2.5	0.70
trans-1,4-Dichloro-2-butene	ND		ug/l	2.5	0.70

Surrogate	%Recovery	Qualifier	Acceptance Criteria
1,2-Dichloroethane-d4	100		70-130
Toluene-d8	103		70-130
4-Bromofluorobenzene	100		70-130
Dibromofluoromethane	99		70-130

Lab Control Sample Analysis
Batch Quality Control

Project Name: MCGUINNESS BOULEVARD
Project Number: Not Specified

Lab Number: L1428173
Report Date: 12/02/14

Parameter	LCS %Recovery	Qual	LCSD %Recovery	Qual	%Recovery Limits	RPD	Qual	RPD Limits
Volatile Organics by 8260/5035 - Westborough Lab Associated sample(s): 05,09-11 Batch: WG743236-4 WG743236-5								
Methylene chloride	111		106		70-130	5		30
1,1-Dichloroethane	117		107		70-130	9		30
Chloroform	102		96		70-130	6		30
Carbon tetrachloride	86		74		70-130	15		30
1,2-Dichloropropane	125		120		70-130	4		30
Dibromochloromethane	89		87		70-130	2		30
2-Chloroethylvinyl ether	121		123		70-130	2		30
1,1,2-Trichloroethane	113		111		70-130	2		30
Tetrachloroethene	88		75		70-130	16		30
Chlorobenzene	97		90		70-130	7		30
Trichlorofluoromethane	85		71		70-139	18		30
1,2-Dichloroethane	108		105		70-130	3		30
1,1,1-Trichloroethane	91		81		70-130	12		30
Bromodichloromethane	101		97		70-130	4		30
trans-1,3-Dichloropropene	109		107		70-130	2		30
cis-1,3-Dichloropropene	109		106		70-130	3		30
1,1-Dichloropropene	105		91		70-130	14		30
Bromoform	86		86		70-130	0		30
1,1,2,2-Tetrachloroethane	114		112		70-130	2		30
Benzene	113		105		70-130	7		30
Toluene	102		94		70-130	8		30

Lab Control Sample Analysis
Batch Quality Control

Project Name: MCGUINNESS BOULEVARD
Project Number: Not Specified

Lab Number: L1428173
Report Date: 12/02/14

Parameter	LCS %Recovery	Qual	LCSD %Recovery	Qual	%Recovery Limits	RPD	Qual	RPD Limits
Volatile Organics by 8260/5035 - Westborough Lab Associated sample(s): 05,09-11 Batch: WG743236-4 WG743236-5								
Ethylbenzene	100		91		70-130	9		30
Chloromethane	129		115		52-130	11		30
Bromomethane	109		96		57-147	13		30
Vinyl chloride	100		84		67-130	17		30
Chloroethane	101		84		50-151	18		30
1,1-Dichloroethene	92		80		65-135	14		30
trans-1,2-Dichloroethene	98		88		70-130	11		30
Trichloroethene	98		89		70-130	10		30
1,2-Dichlorobenzene	91		87		70-130	4		30
1,3-Dichlorobenzene	93		86		70-130	8		30
1,4-Dichlorobenzene	92		87		70-130	6		30
Methyl tert butyl ether	98		98		66-130	0		30
p/m-Xylene	96		87		70-130	10		30
o-Xylene	93		87		70-130	7		30
cis-1,2-Dichloroethene	102		95		70-130	7		30
Dibromomethane	101		100		70-130	1		30
Styrene	91		86		70-130	6		30
Dichlorodifluoromethane	99		81		30-146	20		30
Acetone	105		111		54-140	6		30
Carbon disulfide	68		**58**	Q	59-130	16		30
2-Butanone	119		122		70-130	2		30

Lab Control Sample Analysis
Batch Quality Control

Project Name: MCGUINNESS BOULEVARD
Project Number: Not Specified

Lab Number: L1428173
Report Date: 12/02/14

Parameter	LCS %Recovery	Qual	LCSD %Recovery	Qual	%Recovery Limits	RPD	Qual	RPD Limits
Volatile Organics by 8260/5035 - Westborough Lab Associated sample(s): 05,09-11 Batch: WG743236-4 WG743236-5								
Vinyl acetate	121		122		70-130	1		30
4-Methyl-2-pentanone	101		106		70-130	5		30
1,2,3-Trichloropropane	114		114		68-130	0		30
2-Hexanone	93		98		70-130	5		30
Bromochloromethane	94		93		70-130	1		30
2,2-Dichloropropane	94		84		70-130	11		30
1,2-Dibromoethane	97		96		70-130	1		30
1,3-Dichloropropane	117		115		69-130	2		30
1,1,1,2-Tetrachloroethane	92		88		70-130	4		30
Bromobenzene	90		85		70-130	6		30
n-Butylbenzene	102		90		70-130	13		30
sec-Butylbenzene	96		84		70-130	13		30
tert-Butylbenzene	91		81		70-130	12		30
o-Chlorotoluene	104		97		70-130	7		30
p-Chlorotoluene	103		96		70-130	7		30
1,2-Dibromo-3-chloropropane	75		80		68-130	6		30
Hexachlorobutadiene	85		74		67-130	14		30
Isopropylbenzene	93		83		70-130	11		30
p-Isopropyltoluene	91		80		70-130	13		30
Naphthalene	89		87		70-130	2		30
Acrylonitrile	128		128		70-130	0		30

Lab Control Sample Analysis
Batch Quality Control

Project Name: MCGUINNESS BOULEVARD
Project Number: Not Specified

Lab Number: L1428173
Report Date: 12/02/14

Parameter	LCS %Recovery	Qual	LCSD %Recovery	Qual	%Recovery Limits	RPD	Qual	RPD Limits
Volatile Organics by 8260/5035 - Westborough Lab Associated sample(s): 05,09-11 Batch: WG743236-4 WG743236-5								
Isopropyl Ether	125		122		66-130	2		30
tert-Butyl Alcohol	91		95		70-130	4		30
n-Propylbenzene	101		90		70-130	12		30
1,2,3-Trichlorobenzene	88		86		70-130	2		30
1,2,4-Trichlorobenzene	88		84		70-130	5		30
1,3,5-Trimethylbenzene	96		87		70-130	10		30
1,2,4-Trimethylbenzene	96		88		70-130	9		30
Methyl Acetate	130		132		51-146	2		30
Ethyl Acetate	115		120		70-130	4		30
Acrolein	123		123		70-130	0		30
Cyclohexane	118		98		59-142	19		30
1,4-Dioxane	101		102		65-136	1		30
1,1,2-Trichloro-1,2,2-Trifluoroethane	98		81		50-139	19		30
1,4-Diethylbenzene	92		82		70-130	11		30
4-Ethyltoluene	97		87		70-130	11		30
1,2,4,5-Tetramethylbenzene	89		82		70-130	8		30
Tetrahydrofuran	112		121		66-130	8		30
Ethyl ether	101		102		67-130	1		30
trans-1,4-Dichloro-2-butene	116		112		70-130	4		30
Methyl cyclohexane	105		88		70-130	18		30
Ethyl-Tert-Butyl-Ether	108		106		70-130	2		30

Lab Control Sample Analysis
Batch Quality Control

Project Name: MCGUINNESS BOULEVARD
Project Number: Not Specified
Lab Number: L1428173
Report Date: 12/02/14

Parameter	LCS %Recovery	Qual	LCSD %Recovery	Qual	%Recovery Limits	RPD	Qual	RPD Limits
Volatile Organics by 8260/5035 - Westborough Lab Associated sample(s): 05,09-11 Batch: WG743236-4 WG743236-5								
Tertiary-Amyl Methyl Ether	99		99		70-130	0		30

Surrogate	LCS %Recovery	Qual	LCSD %Recovery	Qual	Acceptance Criteria
1,2-Dichloroethane-d4	100		103		70-130
Toluene-d8	103		104		70-130
4-Bromofluorobenzene	105		105		70-130
Dibromofluoromethane	93		93		70-130

Lab Control Sample Analysis
Batch Quality Control

Project Name: MCGUINNESS BOULEVARD
Project Number: Not Specified

Lab Number: L1428173
Report Date: 12/02/14

Parameter	LCS %Recovery	Qual	LCSD %Recovery	Qual	%Recovery Limits	RPD	Qual	RPD Limits
Volatile Organics by 8260/5035 - Westborough Lab Associated sample(s): 02 Batch: WG743592-1 WG743592-2								
Methylene chloride	108		110		70-130	2		30
1,1-Dichloroethane	103		100		70-130	3		30
Chloroform	103		101		70-130	2		30
Carbon tetrachloride	105		101		70-130	4		30
1,2-Dichloropropane	103		103		70-130	0		30
Dibromochloromethane	101		102		70-130	1		30
2-Chloroethylvinyl ether	85		88		70-130	3		30
1,1,2-Trichloroethane	103		104		70-130	1		30
Tetrachloroethene	108		103		70-130	5		30
Chlorobenzene	103		100		70-130	3		30
Trichlorofluoromethane	104		100		70-139	4		30
1,2-Dichloroethane	100		103		70-130	3		30
1,1,1-Trichloroethane	105		104		70-130	1		30
Bromodichloromethane	100		102		70-130	2		30
trans-1,3-Dichloropropene	104		100		70-130	4		30
cis-1,3-Dichloropropene	104		106		70-130	2		30
1,1-Dichloropropene	106		103		70-130	3		30
Bromoform	97		104		70-130	7		30
1,1,2,2-Tetrachloroethane	97		98		70-130	1		30
Benzene	104		101		70-130	3		30
Toluene	105		102		70-130	3		30

Lab Control Sample Analysis
Batch Quality Control

Project Name: MCGUINNESS BOULEVARD
Project Number: Not Specified

Lab Number: L1428173
Report Date: 12/02/14

Parameter	LCS %Recovery	Qual	LCSD %Recovery	Qual	%Recovery Limits	RPD	Qual	RPD Limits
Volatile Organics by 8260/5035 - Westborough Lab Associated sample(s): 02 Batch: WG743592-1 WG743592-2								
Ethylbenzene	107		104		70-130	3		30
Chloromethane	101		95		52-130	6		30
Bromomethane	106		100		57-147	6		30
Vinyl chloride	104		98		67-130	6		30
Chloroethane	109		107		50-151	2		30
1,1-Dichloroethene	102		98		65-135	4		30
trans-1,2-Dichloroethene	103		100		70-130	3		30
Trichloroethene	107		103		70-130	4		30
1,2-Dichlorobenzene	97		104		70-130	7		30
1,3-Dichlorobenzene	103		105		70-130	2		30
1,4-Dichlorobenzene	102		103		70-130	1		30
Methyl tert butyl ether	99		100		66-130	1		30
p/m-Xylene	112		108		70-130	4		30
o-Xylene	109		107		70-130	2		30
cis-1,2-Dichloroethene	103		102		70-130	1		30
Dibromomethane	102		103		70-130	1		30
Styrene	109		108		70-130	1		30
Dichlorodifluoromethane	99		93		30-146	6		30
Acetone	89		91		54-140	2		30
Carbon disulfide	97		93		59-130	4		30
2-Butanone	83		89		70-130	7		30

Lab Control Sample Analysis
Batch Quality Control

Project Name: MCGUINNESS BOULEVARD
Project Number: Not Specified

Lab Number: L1428173
Report Date: 12/02/14

Parameter	LCS %Recovery	Qual	LCSD %Recovery	Qual	%Recovery Limits	RPD	Qual	RPD Limits
Volatile Organics by 8260/5035 - Westborough Lab Associated sample(s): 02 Batch: WG743592-1 WG743592-2								
Vinyl acetate	104		107		70-130	3		30
4-Methyl-2-pentanone	88		94		70-130	7		30
1,2,3-Trichloropropane	101		102		68-130	1		30
2-Hexanone	88		91		70-130	3		30
Bromochloromethane	103		104		70-130	1		30
2,2-Dichloropropane	106		101		70-130	5		30
1,2-Dibromoethane	100		104		70-130	4		30
1,3-Dichloropropane	102		102		69-130	0		30
1,1,1,2-Tetrachloroethane	104		104		70-130	0		30
Bromobenzene	100		100		70-130	0		30
n-Butylbenzene	104		108		70-130	4		30
sec-Butylbenzene	108		107		70-130	1		30
tert-Butylbenzene	108		106		70-130	2		30
o-Chlorotoluene	106		102		70-130	4		30
p-Chlorotoluene	103		104		70-130	1		30
1,2-Dibromo-3-chloropropane	79		87		68-130	10		30
Hexachlorobutadiene	102		104		67-130	2		30
Isopropylbenzene	112		107		70-130	5		30
p-Isopropyltoluene	109		108		70-130	1		30
Naphthalene	97		105		70-130	8		30
Acrylonitrile	99		106		70-130	7		30

Lab Control Sample Analysis
Batch Quality Control

Project Name: MCGUINNESS BOULEVARD
Project Number: Not Specified

Lab Number: L1428173
Report Date: 12/02/14

Parameter	LCS %Recovery	Qual	LCSD %Recovery	Qual	%Recovery Limits	RPD	Qual	RPD Limits
Volatile Organics by 8260/5035 - Westborough Lab Associated sample(s): 02 Batch: WG743592-1 WG743592-2								
Isopropyl Ether	102		102		66-130	0		30
tert-Butyl Alcohol	86		89		70-130	3		30
n-Propylbenzene	108		102		70-130	6		30
1,2,3-Trichlorobenzene	100		105		70-130	5		30
1,2,4-Trichlorobenzene	102		105		70-130	3		30
1,3,5-Trimethylbenzene	109		104		70-130	5		30
1,2,4-Trimethylbenzene	107		108		70-130	1		30
Methyl Acetate	99		102		51-146	3		30
Ethyl Acetate	94		96		70-130	2		30
Acrolein	88		90		70-130	2		30
Cyclohexane	108		104		59-142	4		30
1,4-Dioxane	102		106		65-136	4		30
1,1,2-Trichloro-1,2,2-Trifluoroethane	103		98		50-139	5		30
1,4-Diethylbenzene	109		110		70-130	1		30
4-Ethyltoluene	111		104		70-130	7		30
1,2,4,5-Tetramethylbenzene	109		112		70-130	3		30
Tetrahydrofuran	101		87		66-130	15		30
Ethyl ether	97		100		67-130	3		30
trans-1,4-Dichloro-2-butene	100		101		70-130	1		30
Methyl cyclohexane	108		102		70-130	6		30
Ethyl-Tert-Butyl-Ether	102		104		70-130	2		30

Lab Control Sample Analysis
Batch Quality Control

Project Name: MCGUINNESS BOULEVARD
Project Number: Not Specified

Lab Number: L1428173
Report Date: 12/02/14

Parameter	LCS %Recovery	Qual	LCSD %Recovery	Qual	%Recovery Limits	RPD	Qual	RPD Limits
Volatile Organics by 8260/5035 - Westborough Lab Associated sample(s): 02 Batch: WG743592-1 WG743592-2								
Tertiary-Amyl Methyl Ether	102		103		70-130	1		30

Surrogate	LCS %Recovery	Qual	LCSD %Recovery	Qual	Acceptance Criteria
1,2-Dichloroethane-d4	101		100		70-130
Toluene-d8	100		98		70-130
4-Bromofluorobenzene	101		98		70-130
Dibromofluoromethane	100		101		70-130

Lab Control Sample Analysis
Batch Quality Control

Project Name: MCGUINNESS BOULEVARD
Project Number: Not Specified

Lab Number: L1428173
Report Date: 12/02/14

Parameter	LCS %Recovery	Qual	LCSD %Recovery	Qual	%Recovery Limits	RPD	Qual	RPD Limits
Volatile Organics by 8260/5035 - Westborough Lab Associated sample(s): 01,03-04,06-07,12 Batch: WG743731-1 WG743731-2								
Methylene chloride	102		101		70-130	1		30
1,1-Dichloroethane	102		108		70-130	6		30
Chloroform	103		106		70-130	3		30
Carbon tetrachloride	100		104		70-130	4		30
1,2-Dichloropropane	102		107		70-130	5		30
Dibromochloromethane	99		102		70-130	3		30
2-Chloroethylvinyl ether	87		90		70-130	3		30
1,1,2-Trichloroethane	102		105		70-130	3		30
Tetrachloroethene	102		108		70-130	6		30
Chlorobenzene	100		103		70-130	3		30
Trichlorofluoromethane	98		101		70-139	3		30
1,2-Dichloroethane	104		107		70-130	3		30
1,1,1-Trichloroethane	104		107		70-130	3		30
Bromodichloromethane	101		104		70-130	3		30
trans-1,3-Dichloropropene	100		105		70-130	5		30
cis-1,3-Dichloropropene	105		109		70-130	4		30
1,1-Dichloropropene	104		105		70-130	1		30
Bromoform	95		100		70-130	5		30
1,1,2,2-Tetrachloroethane	100		102		70-130	2		30
Benzene	104		108		70-130	4		30
Toluene	102		106		70-130	4		30

Lab Control Sample Analysis
Batch Quality Control

Project Name: MCGUINNESS BOULEVARD
Project Number: Not Specified

Lab Number: L1428173
Report Date: 12/02/14

Parameter	LCS %Recovery	Qual	LCSD %Recovery	Qual	%Recovery Limits	RPD	Qual	RPD Limits
Volatile Organics by 8260/5035 - Westborough Lab Associated sample(s): 01,03-04,06-07,12 Batch: WG743731-1 WG743731-2								
Ethylbenzene	105		107		70-130	2		30
Chloromethane	109		102		52-130	7		30
Bromomethane	99		102		57-147	3		30
Vinyl chloride	108		104		67-130	4		30
Chloroethane	110		113		50-151	3		30
1,1-Dichloroethene	98		102		65-135	4		30
trans-1,2-Dichloroethene	102		105		70-130	3		30
Trichloroethene	106		108		70-130	2		30
1,2-Dichlorobenzene	101		104		70-130	3		30
1,3-Dichlorobenzene	104		106		70-130	2		30
1,4-Dichlorobenzene	101		105		70-130	4		30
Methyl tert butyl ether	99		104		66-130	5		30
p/m-Xylene	113		112		70-130	1		30
o-Xylene	112		111		70-130	1		30
cis-1,2-Dichloroethene	103		106		70-130	3		30
Dibromomethane	103		104		70-130	1		30
Styrene	112		112		70-130	0		30
Dichlorodifluoromethane	101		96		30-146	5		30
Acetone	90		92		54-140	2		30
Carbon disulfide	93		98		59-130	5		30
2-Butanone	88		89		70-130	1		30

Lab Control Sample Analysis
Batch Quality Control

Project Name: MCGUINNESS BOULEVARD
Project Number: Not Specified

Lab Number: L1428173
Report Date: 12/02/14

Parameter	LCS %Recovery	Qual	LCSD %Recovery	Qual	%Recovery Limits	RPD	Qual	RPD Limits
Volatile Organics by 8260/5035 - Westborough Lab Associated sample(s): 01,03-04,06-07,12 Batch: WG743731-1 WG743731-2								
Vinyl acetate	105		108		70-130	3		30
4-Methyl-2-pentanone	94		94		70-130	0		30
1,2,3-Trichloropropane	102		104		68-130	2		30
2-Hexanone	87		89		70-130	2		30
Bromochloromethane	108		111		70-130	3		30
2,2-Dichloropropane	101		104		70-130	3		30
1,2-Dibromoethane	101		105		70-130	4		30
1,3-Dichloropropane	99		104		69-130	5		30
1,1,1,2-Tetrachloroethane	101		105		70-130	4		30
Bromobenzene	100		104		70-130	4		30
n-Butylbenzene	106		109		70-130	3		30
sec-Butylbenzene	105		104		70-130	1		30
tert-Butylbenzene	104		107		70-130	3		30
o-Chlorotoluene	104		104		70-130	0		30
p-Chlorotoluene	104		107		70-130	3		30
1,2-Dibromo-3-chloropropane	77		80		68-130	4		30
Hexachlorobutadiene	102		105		67-130	3		30
Isopropylbenzene	112		111		70-130	1		30
p-Isopropyltoluene	106		109		70-130	3		30
Naphthalene	99		102		70-130	3		30
Acrylonitrile	105		106		70-130	1		30

Lab Control Sample Analysis
Batch Quality Control

Project Name: MCGUINNESS BOULEVARD
Project Number: Not Specified

Lab Number: L1428173
Report Date: 12/02/14

Parameter	LCS %Recovery	Qual	LCSD %Recovery	Qual	%Recovery Limits	RPD	Qual	RPD Limits
Volatile Organics by 8260/5035 - Westborough Lab Associated sample(s): 01,03-04,06-07,12 Batch: WG743731-1 WG743731-2								
Isopropyl Ether	102		107		66-130	5		30
tert-Butyl Alcohol	88		92		70-130	4		30
n-Propylbenzene	103		107		70-130	4		30
1,2,3-Trichlorobenzene	100		104		70-130	4		30
1,2,4-Trichlorobenzene	101		104		70-130	3		30
1,3,5-Trimethylbenzene	106		108		70-130	2		30
1,2,4-Trimethylbenzene	106		109		70-130	3		30
Methyl Acetate	101		104		51-146	3		30
Ethyl Acetate	97		100		70-130	3		30
Acrolein	90		92		70-130	2		30
Cyclohexane	102		107		59-142	5		30
1,4-Dioxane	98		106		65-136	8		30
1,1,2-Trichloro-1,2,2-Trifluoroethane	96		98		50-139	2		30
1,4-Diethylbenzene	118		116		70-130	2		30
4-Ethyltoluene	117		113		70-130	3		30
1,2,4,5-Tetramethylbenzene	116		115		70-130	1		30
Tetrahydrofuran	105		106		66-130	1		30
Ethyl ether	97		102		67-130	5		30
trans-1,4-Dichloro-2-butene	97		101		70-130	4		30
Methyl cyclohexane	102		104		70-130	2		30
Ethyl-Tert-Butyl-Ether	102		107		70-130	5		30

Lab Control Sample Analysis
Batch Quality Control

Project Name: MCGUINNESS BOULEVARD
Project Number: Not Specified
Lab Number: L1428173
Report Date: 12/02/14

Parameter	LCS %Recovery	Qual	LCSD %Recovery	Qual	%Recovery Limits	RPD	Qual	RPD Limits
Volatile Organics by 8260/5035 - Westborough Lab Associated sample(s): 01,03-04,06-07,12 Batch: WG743731-1 WG743731-2								
Tertiary-Amyl Methyl Ether	101		107		70-130	6		30

Surrogate	LCS %Recovery	Qual	LCSD %Recovery	Qual	Acceptance Criteria
1,2-Dichloroethane-d4	102		99		70-130
Toluene-d8	99		101		70-130
4-Bromofluorobenzene	99		97		70-130
Dibromofluoromethane	101		103		70-130

Lab Control Sample Analysis
Batch Quality Control

Project Name: MCGUINNESS BOULEVARD
Project Number: Not Specified

Lab Number: L1428173
Report Date: 12/02/14

Parameter	LCS %Recovery	Qual	LCSD %Recovery	Qual	%Recovery Limits	RPD	Qual	RPD Limits
Volatile Organics by 8260/5035 - Westborough Lab Associated sample(s): 03 Batch: WG743731-4 WG743731-5								
Methylene chloride	106		97		70-130	9		30
1,1-Dichloroethane	106		102		70-130	4		30
Chloroform	108		104		70-130	4		30
Carbon tetrachloride	116		110		70-130	5		30
1,2-Dichloropropane	100		98		70-130	2		30
Dibromochloromethane	105		102		70-130	3		30
2-Chloroethylvinyl ether	84		87		70-130	4		30
1,1,2-Trichloroethane	102		98		70-130	4		30
Tetrachloroethene	111		105		70-130	6		30
Chlorobenzene	102		98		70-130	4		30
Trichlorofluoromethane	120		110		70-139	9		30
1,2-Dichloroethane	111		111		70-130	0		30
1,1,1-Trichloroethane	118		111		70-130	6		30
Bromodichloromethane	103		105		70-130	2		30
trans-1,3-Dichloropropene	105		102		70-130	3		30
cis-1,3-Dichloropropene	105		103		70-130	2		30
1,1-Dichloropropene	113		106		70-130	6		30
Bromoform	98		97		70-130	1		30
1,1,2,2-Tetrachloroethane	94		93		70-130	1		30
Benzene	103		99		70-130	4		30
Toluene	104		98		70-130	6		30

Lab Control Sample Analysis
Batch Quality Control

Project Name: MCGUINNESS BOULEVARD
Project Number: Not Specified

Lab Number: L1428173
Report Date: 12/02/14

Parameter	LCS %Recovery	Qual	LCSD %Recovery	Qual	%Recovery Limits	RPD	Qual	RPD Limits
Volatile Organics by 8260/5035 - Westborough Lab Associated sample(s): 03 Batch: WG743731-4 WG743731-5								
Ethylbenzene	108		102		70-130	6		30
Chloromethane	101		90		52-130	12		30
Bromomethane	107		101		57-147	6		30
Vinyl chloride	110		101		67-130	9		30
Chloroethane	114		109		50-151	4		30
1,1-Dichloroethene	106		99		65-135	7		30
trans-1,2-Dichloroethene	104		99		70-130	5		30
Trichloroethene	110		107		70-130	3		30
1,2-Dichlorobenzene	100		96		70-130	4		30
1,3-Dichlorobenzene	103		99		70-130	4		30
1,4-Dichlorobenzene	102		97		70-130	5		30
Methyl tert butyl ether	103		102		66-130	1		30
p/m-Xylene	111		105		70-130	6		30
o-Xylene	108		104		70-130	4		30
cis-1,2-Dichloroethene	103		100		70-130	3		30
Dibromomethane	104		103		70-130	1		30
Styrene	109		105		70-130	4		30
Dichlorodifluoromethane	110		98		30-146	12		30
Acetone	94		96		54-140	2		30
Carbon disulfide	99		93		59-130	6		30
2-Butanone	90		89		70-130	1		30

Lab Control Sample Analysis
Batch Quality Control

Project Name: MCGUINNESS BOULEVARD
Project Number: Not Specified

Lab Number: L1428173
Report Date: 12/02/14

Parameter	LCS %Recovery	Qual	LCSD %Recovery	Qual	%Recovery Limits	RPD	Qual	RPD Limits
Volatile Organics by 8260/5035 - Westborough Lab Associated sample(s): 03 Batch: WG743731-4 WG743731-5								
Vinyl acetate	107		107		70-130	0		30
4-Methyl-2-pentanone	90		87		70-130	3		30
1,2,3-Trichloropropane	100		99		68-130	1		30
2-Hexanone	90		90		70-130	0		30
Bromochloromethane	107		104		70-130	3		30
2,2-Dichloropropane	113		108		70-130	5		30
1,2-Dibromoethane	102		101		70-130	1		30
1,3-Dichloropropane	101		100		69-130	1		30
1,1,1,2-Tetrachloroethane	107		104		70-130	3		30
Bromobenzene	99		96		70-130	3		30
n-Butylbenzene	109		103		70-130	6		30
sec-Butylbenzene	109		101		70-130	8		30
tert-Butylbenzene	106		100		70-130	6		30
o-Chlorotoluene	105		100		70-130	5		30
p-Chlorotoluene	105		100		70-130	5		30
1,2-Dibromo-3-chloropropane	82		83		68-130	1		30
Hexachlorobutadiene	110		103		67-130	7		30
Isopropylbenzene	113		107		70-130	5		30
p-Isopropyltoluene	110		103		70-130	7		30
Naphthalene	100		98		70-130	2		30
Acrylonitrile	99		101		70-130	2		30

Lab Control Sample Analysis
Batch Quality Control

Project Name: MCGUINNESS BOULEVARD
Project Number: Not Specified

Lab Number: L1428173
Report Date: 12/02/14

Parameter	LCS %Recovery	Qual	LCSD %Recovery	Qual	%Recovery Limits	RPD	Qual	RPD Limits
Volatile Organics by 8260/5035 - Westborough Lab Associated sample(s): 03 Batch: WG743731-4 WG743731-5								
Isopropyl Ether	103		103		66-130	0		30
tert-Butyl Alcohol	95		94		70-130	1		30
n-Propylbenzene	105		99		70-130	6		30
1,2,3-Trichlorobenzene	102		100		70-130	2		30
1,2,4-Trichlorobenzene	103		99		70-130	4		30
1,3,5-Trimethylbenzene	108		102		70-130	6		30
1,2,4-Trimethylbenzene	107		102		70-130	5		30
Methyl Acetate	101		102		51-146	1		30
Ethyl Acetate	97		89		70-130	9		30
Acrolein	87		85		70-130	2		30
Cyclohexane	114		107		59-142	6		30
1,4-Dioxane	100		104		65-136	4		30
1,1,2-Trichloro-1,2,2-Trifluoroethane	114		103		50-139	10		30
1,4-Diethylbenzene	116		114		70-130	2		30
4-Ethyltoluene	114		111		70-130	3		30
1,2,4,5-Tetramethylbenzene	115		112		70-130	3		30
Tetrahydrofuran	95		105		66-130	10		30
Ethyl ether	98		93		67-130	5		30
trans-1,4-Dichloro-2-butene	104		98		70-130	6		30
Methyl cyclohexane	111		105		70-130	6		30
Ethyl-Tert-Butyl-Ether	105		104		70-130	1		30

Lab Control Sample Analysis

Batch Quality Control

Project Name: MCGUINNESS BOULEVARD

Project Number: Not Specified

Lab Number: L1428173

Report Date: 12/02/14

Parameter	LCS %Recovery	Qual	LCSD %Recovery	Qual	%Recovery Limits	RPD	Qual	RPD Limits
Volatile Organics by 8260/5035 - Westborough Lab Associated sample(s): 03 Batch: WG743731-4 WG743731-5								
Tertiary-Amyl Methyl Ether	102		102		70-130	0		30

Surrogate	LCS %Recovery	Qual	LCSD %Recovery	Qual	Acceptance Criteria
1,2-Dichloroethane-d4	108		110		70-130
Toluene-d8	99		98		70-130
4-Bromofluorobenzene	98		98		70-130
Dibromofluoromethane	104		106		70-130

Lab Control Sample Analysis
Batch Quality Control

Project Name: MCGUINNESS BOULEVARD
Project Number: Not Specified

Lab Number: L1428173
Report Date: 12/02/14

Parameter	LCS %Recovery	Qual	LCSD %Recovery	Qual	%Recovery Limits	RPD	Qual	RPD Limits
Volatile Organics by GC/MS - Westborough Lab Associated sample(s): 08 Batch: WG744156-1 WG744156-2								
Methylene chloride	92		89		70-130	3		20
1,1-Dichloroethane	91		87		70-130	4		20
Chloroform	92		88		70-130	4		20
Carbon tetrachloride	83		79		63-132	5		20
1,2-Dichloropropane	95		91		70-130	4		20
Dibromochloromethane	91		90		63-130	1		20
1,1,2-Trichloroethane	95		94		70-130	1		20
Tetrachloroethene	86		82		70-130	5		20
Chlorobenzene	90		88		75-130	2		20
Trichlorofluoromethane	69		66		62-150	4		20
1,2-Dichloroethane	94		93		70-130	1		20
1,1,1-Trichloroethane	83		81		67-130	2		20
Bromodichloromethane	94		90		67-130	4		20
trans-1,3-Dichloropropene	83		82		70-130	1		20
cis-1,3-Dichloropropene	89		87		70-130	2		20
1,1-Dichloropropene	86		82		70-130	5		20
Bromoform	89		89		54-136	0		20
1,1,2,2-Tetrachloroethane	91		89		67-130	2		20
Benzene	98		95		70-130	3		20
Toluene	91		88		70-130	3		20
Ethylbenzene	93		91		70-130	2		20

Lab Control Sample Analysis
Batch Quality Control

Project Name: MCGUINNESS BOULEVARD
Project Number: Not Specified

Lab Number: L1428173
Report Date: 12/02/14

Parameter	LCS %Recovery	Qual	LCSD %Recovery	Qual	%Recovery Limits	RPD	Qual	RPD Limits
Volatile Organics by GC/MS - Westborough Lab Associated sample(s): 08 Batch: WG744156-1 WG744156-2								
Chloromethane	66		**62**	Q	64-130	6		20
Bromomethane	40		**36**	Q	39-139	11		20
Vinyl chloride	75		70		55-140	7		20
Chloroethane	81		78		55-138	4		20
1,1-Dichloroethene	79		77		61-145	3		20
trans-1,2-Dichloroethene	89		86		70-130	3		20
Trichloroethene	89		86		70-130	3		20
1,2-Dichlorobenzene	89		85		70-130	5		20
1,3-Dichlorobenzene	88		84		70-130	5		20
1,4-Dichlorobenzene	87		85		70-130	2		20
Methyl tert butyl ether	86		82		63-130	5		20
p/m-Xylene	93		90		70-130	3		20
o-Xylene	94		92		70-130	2		20
cis-1,2-Dichloroethene	94		90		70-130	4		20
Dibromomethane	94		92		70-130	2		20
1,2,3-Trichloropropane	88		86		64-130	2		20
Acrylonitrile	94		90		70-130	4		20
Styrene	99		97		70-130	2		20
Dichlorodifluoromethane	56		51		36-147	9		20
Acetone	82		80		58-148	2		20
Carbon disulfide	74		70		51-130	6		20

Lab Control Sample Analysis
Batch Quality Control

Project Name: MCGUINNESS BOULEVARD
Project Number: Not Specified

Lab Number: L1428173
Report Date: 12/02/14

Parameter	LCS %Recovery	Qual	LCSD %Recovery	Qual	%Recovery Limits	RPD	Qual	RPD Limits
Volatile Organics by GC/MS - Westborough Lab Associated sample(s): 08 Batch: WG744156-1 WG744156-2								
2-Butanone	89		88		63-138	1		20
Vinyl acetate	83		81		70-130	2		20
4-Methyl-2-pentanone	89		88		59-130	1		20
2-Hexanone	80		81		57-130	1		20
Bromochloromethane	98		93		70-130	5		20
2,2-Dichloropropane	74		68		63-133	8		20
1,2-Dibromoethane	90		87		70-130	3		20
1,3-Dichloropropane	93		92		70-130	1		20
1,1,1,2-Tetrachloroethane	90		89		64-130	1		20
Bromobenzene	88		86		70-130	2		20
n-Butylbenzene	84		82		53-136	2		20
sec-Butylbenzene	88		85		70-130	3		20
tert-Butylbenzene	85		83		70-130	2		20
o-Chlorotoluene	89		87		70-130	2		20
p-Chlorotoluene	91		88		70-130	3		20
1,2-Dibromo-3-chloropropane	84		85		41-144	1		20
Hexachlorobutadiene	76		73		63-130	4		20
Isopropylbenzene	89		86		70-130	3		20
p-Isopropyltoluene	86		84		70-130	2		20
Naphthalene	98		94		70-130	4		20
n-Propylbenzene	91		88		69-130	3		20

Lab Control Sample Analysis
Batch Quality Control

Project Name: MCGUINNESS BOULEVARD
Project Number: Not Specified
Lab Number: L1428173
Report Date: 12/02/14

Parameter	LCS %Recovery	Qual	LCSD %Recovery	Qual	%Recovery Limits	RPD	Qual	RPD Limits
Volatile Organics by GC/MS - Westborough Lab Associated sample(s): 08 Batch: WG744156-1 WG744156-2								
1,2,3-Trichlorobenzene	80		80		70-130	0		20
1,2,4-Trichlorobenzene	81		79		70-130	3		20
1,3,5-Trimethylbenzene	89		88		64-130	1		20
1,2,4-Trimethylbenzene	90		87		70-130	3		20
1,4-Dioxane	93		76		56-162	20		20
p-Diethylbenzene	87		83		70-130	5		20
p-Ethyltoluene	91		88		70-130	3		20
1,2,4,5-Tetramethylbenzene	98		96		70-130	2		20
Ethyl ether	92		90		59-134	2		20
trans-1,4-Dichloro-2-butene	81		76		70-130	6		20

Surrogate	LCS %Recovery	Qual	LCSD %Recovery	Qual	Acceptance Criteria
1,2-Dichloroethane-d4	105		102		70-130
Toluene-d8	103		103		70-130
4-Bromofluorobenzene	100		100		70-130
Dibromofluoromethane	104		103		70-130

SEMIVOLATILES

Project Name: MCGUINNESS BOULEVARD **Lab Number:** L1428173

Project Number: Not Specified **Report Date:** 12/02/14

SAMPLE RESULTS

Lab ID:	L1428173-01	Date Collected:	11/20/14 10:00
Client ID:	VHB SB-4 (0-2')	Date Received:	11/21/14
Sample Location:	209-235 MCGUINESS BLVD.	Field Prep:	Not Specified
Matrix:	Soil	Extraction Method:	EPA 3546
Analytical Method:	1,8270D	Extraction Date:	11/24/14 17:54
Analytical Date:	11/25/14 18:03		
Analyst:	JB		
Percent Solids:	86%		

Parameter	Result	Qualifier	Units	RL	MDL	Dilution Factor
Semivolatile Organics by GC/MS - Westborough Lab						
Acenaphthene	ND		ug/kg	150	39.	1
1,2,4-Trichlorobenzene	ND		ug/kg	190	61.	1
Hexachlorobenzene	ND		ug/kg	110	35.	1
Bis(2-chloroethyl)ether	ND		ug/kg	170	52.	1
2-Chloronaphthalene	ND		ug/kg	190	61.	1
1,2-Dichlorobenzene	ND		ug/kg	190	62.	1
1,3-Dichlorobenzene	ND		ug/kg	190	59.	1
1,4-Dichlorobenzene	ND		ug/kg	190	57.	1
3,3'-Dichlorobenzidine	ND		ug/kg	190	50.	1
2,4-Dinitrotoluene	ND		ug/kg	190	40.	1
2,6-Dinitrotoluene	ND		ug/kg	190	48.	1
Fluoranthene	390		ug/kg	110	34.	1
4-Chlorophenyl phenyl ether	ND		ug/kg	190	57.	1
4-Bromophenyl phenyl ether	ND		ug/kg	190	43.	1
Bis(2-chloroisopropyl)ether	ND		ug/kg	220	66.	1
Bis(2-chloroethoxy)methane	ND		ug/kg	200	57.	1
Hexachlorobutadiene	ND		ug/kg	190	53.	1
Hexachlorocyclopentadiene	ND		ug/kg	540	120	1
Hexachloroethane	ND		ug/kg	150	34.	1
Isophorone	ND		ug/kg	170	50.	1
Naphthalene	ND		ug/kg	190	62.	1
Nitrobenzene	ND		ug/kg	170	45.	1
NitrosoDiPhenylAmine(NDPA)/DPA	ND		ug/kg	150	39.	1
n-Nitrosodi-n-propylamine	ND		ug/kg	190	56.	1
Bis(2-Ethylhexyl)phthalate	ND		ug/kg	190	49.	1
Butyl benzyl phthalate	ND		ug/kg	190	37.	1
Di-n-butylphthalate	ND		ug/kg	190	36.	1
Di-n-octylphthalate	ND		ug/kg	190	46.	1
Diethyl phthalate	ND		ug/kg	190	40.	1
Dimethyl phthalate	ND		ug/kg	190	48.	1

Project Name: MCGUINNESS BOULEVARD **Lab Number:** L1428173

Project Number: Not Specified **Report Date:** 12/02/14

SAMPLE RESULTS

Lab ID: L1428173-01 Date Collected: 11/20/14 10:00

Client ID: VHB SB-4 (0-2') Date Received: 11/21/14

Sample Location: 209-235 MCGUINESS BLVD. Field Prep: Not Specified

Parameter	Result	Qualifier	Units	RL	MDL	Dilution Factor
Semivolatile Organics by GC/MS - Westborough Lab						
Benzo(a)anthracene	200		ug/kg	110	37.	1
Benzo(a)pyrene	190		ug/kg	150	46.	1
Benzo(b)fluoranthene	240		ug/kg	110	38.	1
Benzo(k)fluoranthene	95	J	ug/kg	110	36.	1
Chrysene	220		ug/kg	110	37.	1
Acenaphthylene	ND		ug/kg	150	35.	1
Anthracene	50	J	ug/kg	110	31.	1
Benzo(ghi)perylene	110	J	ug/kg	150	39.	1
Fluorene	ND		ug/kg	190	54.	1
Phenanthrene	270		ug/kg	110	37.	1
Dibenzo(a,h)anthracene	ND		ug/kg	110	36.	1
Indeno(1,2,3-cd)Pyrene	97	J	ug/kg	150	42.	1
Pyrene	350		ug/kg	110	36.	1
Biphenyl	ND		ug/kg	430	62.	1
4-Chloroaniline	ND		ug/kg	190	49.	1
2-Nitroaniline	ND		ug/kg	190	53.	1
3-Nitroaniline	ND		ug/kg	190	52.	1
4-Nitroaniline	ND		ug/kg	190	51.	1
Dibenzofuran	ND		ug/kg	190	62.	1
2-Methylnaphthalene	ND		ug/kg	220	60.	1
1,2,4,5-Tetrachlorobenzene	ND		ug/kg	190	58.	1
Acetophenone	ND		ug/kg	190	58.	1
2,4,6-Trichlorophenol	ND		ug/kg	110	35.	1
P-Chloro-M-Cresol	ND		ug/kg	190	54.	1
2-Chlorophenol	ND		ug/kg	190	57.	1
2,4-Dichlorophenol	ND		ug/kg	170	61.	1
2,4-Dimethylphenol	ND		ug/kg	190	56.	1
2-Nitrophenol	ND		ug/kg	400	58.	1
4-Nitrophenol	ND		ug/kg	260	61.	1
2,4-Dinitrophenol	ND		ug/kg	900	260	1
4,6-Dinitro-o-cresol	ND		ug/kg	490	69.	1
Pentachlorophenol	ND		ug/kg	150	40.	1
Phenol	ND		ug/kg	190	55.	1
2-Methylphenol	ND		ug/kg	190	60.	1
3-Methylphenol/4-Methylphenol	ND		ug/kg	270	61.	1
2,4,5-Trichlorophenol	ND		ug/kg	190	61.	1
Benzoic Acid	ND		ug/kg	610	190	1
Benzyl Alcohol	ND		ug/kg	190	58.	1
Carbazole	ND		ug/kg	190	40.	1

Project Name: MCGUINNESS BOULEVARD **Lab Number:** L1428173

Project Number: Not Specified **Report Date:** 12/02/14

SAMPLE RESULTS

Lab ID: L1428173-01 Date Collected: 11/20/14 10:00

Client ID: VHB SB-4 (0-2') Date Received: 11/21/14

Sample Location: 209-235 MCGUINESS BLVD. Field Prep: Not Specified

Parameter	Result	Qualifier	Units	RL	MDL	Dilution Factor

Semivolatile Organics by GC/MS - Westborough Lab

Surrogate	% Recovery	Qualifier	Acceptance Criteria
2-Fluorophenol	71		25-120
Phenol-d6	71		10-120
Nitrobenzene-d5	81		23-120
2-Fluorobiphenyl	80		30-120
2,4,6-Tribromophenol	76		0-136
4-Terphenyl-d14	66		18-120

Project Name: MCGUINNESS BOULEVARD **Lab Number:** L1428173

Project Number: Not Specified **Report Date:** 12/02/14

SAMPLE RESULTS

Lab ID:	L1428173-02	Date Collected:	11/20/14 10:25
Client ID:	VHB SB-4 (14-16')	Date Received:	11/21/14
Sample Location:	209-235 MCGUINESS BLVD.	Field Prep:	Not Specified
Matrix:	Soil	Extraction Method:	EPA 3546
Analytical Method:	1,8270D	Extraction Date:	11/24/14 17:54
Analytical Date:	11/25/14 18:29		
Analyst:	JB		
Percent Solids:	85%		

Parameter	Result	Qualifier	Units	RL	MDL	Dilution Factor
Semivolatile Organics by GC/MS - Westborough Lab						
Acenaphthene	ND		ug/kg	150	40.	1
1,2,4-Trichlorobenzene	ND		ug/kg	190	63.	1
Hexachlorobenzene	ND		ug/kg	120	36.	1
Bis(2-chloroethyl)ether	ND		ug/kg	170	54.	1
2-Chloronaphthalene	ND		ug/kg	190	63.	1
1,2-Dichlorobenzene	ND		ug/kg	190	63.	1
1,3-Dichlorobenzene	ND		ug/kg	190	61.	1
1,4-Dichlorobenzene	ND		ug/kg	190	59.	1
3,3'-Dichlorobenzidine	ND		ug/kg	190	51.	1
2,4-Dinitrotoluene	ND		ug/kg	190	42.	1
2,6-Dinitrotoluene	ND		ug/kg	190	49.	1
Fluoranthene	ND		ug/kg	120	35.	1
4-Chlorophenyl phenyl ether	ND		ug/kg	190	59.	1
4-Bromophenyl phenyl ether	ND		ug/kg	190	44.	1
Bis(2-chloroisopropyl)ether	ND		ug/kg	230	68.	1
Bis(2-chloroethoxy)methane	ND		ug/kg	210	58.	1
Hexachlorobutadiene	ND		ug/kg	190	54.	1
Hexachlorocyclopentadiene	ND		ug/kg	550	120	1
Hexachloroethane	ND		ug/kg	150	35.	1
Isophorone	ND		ug/kg	170	51.	1
Naphthalene	ND		ug/kg	190	64.	1
Nitrobenzene	ND		ug/kg	170	46.	1
NitrosoDiPhenylAmine(NDPA)/DPA	ND		ug/kg	150	40.	1
n-Nitrosodi-n-propylamine	ND		ug/kg	190	58.	1
Bis(2-Ethylhexyl)phthalate	ND		ug/kg	190	51.	1
Butyl benzyl phthalate	ND		ug/kg	190	38.	1
Di-n-butylphthalate	ND		ug/kg	190	37.	1
Di-n-octylphthalate	ND		ug/kg	190	48.	1
Diethyl phthalate	ND		ug/kg	190	41.	1
Dimethyl phthalate	ND		ug/kg	190	49.	1

Project Name: MCGUINNESS BOULEVARD **Lab Number:** L1428173

Project Number: Not Specified **Report Date:** 12/02/14

SAMPLE RESULTS

Lab ID: L1428173-02 Date Collected: 11/20/14 10:25

Client ID: VHB SB-4 (14-16') Date Received: 11/21/14

Sample Location: 209-235 MCGUINESS BLVD. Field Prep: Not Specified

Parameter	Result	Qualifier	Units	RL	MDL	Dilution Factor
Semivolatile Organics by GC/MS - Westborough Lab						
Benzo(a)anthracene	ND		ug/kg	120	38.	1
Benzo(a)pyrene	ND		ug/kg	150	47.	1
Benzo(b)fluoranthene	ND		ug/kg	120	39.	1
Benzo(k)fluoranthene	ND		ug/kg	120	37.	1
Chrysene	ND		ug/kg	120	38.	1
Acenaphthylene	ND		ug/kg	150	36.	1
Anthracene	ND		ug/kg	120	32.	1
Benzo(ghi)perylene	ND		ug/kg	150	40.	1
Fluorene	ND		ug/kg	190	55.	1
Phenanthrene	ND		ug/kg	120	38.	1
Dibenzo(a,h)anthracene	ND		ug/kg	120	37.	1
Indeno(1,2,3-cd)Pyrene	ND		ug/kg	150	43.	1
Pyrene	ND		ug/kg	120	38.	1
Biphenyl	ND		ug/kg	440	64.	1
4-Chloroaniline	ND		ug/kg	190	51.	1
2-Nitroaniline	ND		ug/kg	190	54.	1
3-Nitroaniline	ND		ug/kg	190	53.	1
4-Nitroaniline	ND		ug/kg	190	52.	1
Dibenzofuran	ND		ug/kg	190	64.	1
2-Methylnaphthalene	ND		ug/kg	230	62.	1
1,2,4,5-Tetrachlorobenzene	ND		ug/kg	190	60.	1
Acetophenone	ND		ug/kg	190	60.	1
2,4,6-Trichlorophenol	ND		ug/kg	120	36.	1
P-Chloro-M-Cresol	ND		ug/kg	190	56.	1
2-Chlorophenol	ND		ug/kg	190	58.	1
2,4-Dichlorophenol	ND		ug/kg	170	63.	1
2,4-Dimethylphenol	ND		ug/kg	190	58.	1
2-Nitrophenol	ND		ug/kg	420	60.	1
4-Nitrophenol	ND		ug/kg	270	63.	1
2,4-Dinitrophenol	ND		ug/kg	930	260	1
4,6-Dinitro-o-cresol	ND		ug/kg	500	71.	1
Pentachlorophenol	ND		ug/kg	150	41.	1
Phenol	ND		ug/kg	190	57.	1
2-Methylphenol	ND		ug/kg	190	62.	1
3-Methylphenol/4-Methylphenol	ND		ug/kg	280	63.	1
2,4,5-Trichlorophenol	ND		ug/kg	190	63.	1
Benzoic Acid	ND		ug/kg	630	200	1
Benzyl Alcohol	ND		ug/kg	190	60.	1
Carbazole	ND		ug/kg	190	42.	1

Project Name: MCGUINNESS BOULEVARD **Lab Number:** L1428173

Project Number: Not Specified **Report Date:** 12/02/14

SAMPLE RESULTS

Lab ID: L1428173-02 Date Collected: 11/20/14 10:25

Client ID: VHB SB-4 (14-16') Date Received: 11/21/14

Sample Location: 209-235 MCGUINESS BLVD. Field Prep: Not Specified

Parameter	Result	Qualifier	Units	RL	MDL	Dilution Factor

Semivolatile Organics by GC/MS - Westborough Lab

Surrogate	% Recovery	Qualifier	Acceptance Criteria
2-Fluorophenol	68		25-120
Phenol-d6	68		10-120
Nitrobenzene-d5	73		23-120
2-Fluorobiphenyl	71		30-120
2,4,6-Tribromophenol	74		0-136
4-Terphenyl-d14	54		18-120

Project Name: MCGUINNESS BOULEVARD **Lab Number:** L1428173

Project Number: Not Specified **Report Date:** 12/02/14

SAMPLE RESULTS

Lab ID:	L1428173-03	Date Collected:	11/20/14 11:15
Client ID:	VHB SB-1 (0-2')	Date Received:	11/21/14
Sample Location:	209-235 MCGUINESS BLVD.	Field Prep:	Not Specified
Matrix:	Soil	Extraction Method:	EPA 3546
Analytical Method:	1,8270D	Extraction Date:	11/24/14 17:54
Analytical Date:	11/25/14 18:58		
Analyst:	JB		
Percent Solids:	88%		

Parameter	Result	Qualifier	Units	RL	MDL	Dilution Factor
Semivolatile Organics by GC/MS - Westborough Lab						
Acenaphthene	230		ug/kg	150	38.	1
1,2,4-Trichlorobenzene	ND		ug/kg	180	60.	1
Hexachlorobenzene	ND		ug/kg	110	34.	1
Bis(2-chloroethyl)ether	ND		ug/kg	160	51.	1
2-Chloronaphthalene	ND		ug/kg	180	60.	1
1,2-Dichlorobenzene	ND		ug/kg	180	60.	1
1,3-Dichlorobenzene	ND		ug/kg	180	58.	1
1,4-Dichlorobenzene	ND		ug/kg	180	56.	1
3,3'-Dichlorobenzidine	ND		ug/kg	180	49.	1
2,4-Dinitrotoluene	ND		ug/kg	180	40.	1
2,6-Dinitrotoluene	ND		ug/kg	180	47.	1
Fluoranthene	3300		ug/kg	110	34.	1
4-Chlorophenyl phenyl ether	ND		ug/kg	180	56.	1
4-Bromophenyl phenyl ether	ND		ug/kg	180	42.	1
Bis(2-chloroisopropyl)ether	ND		ug/kg	220	64.	1
Bis(2-chloroethoxy)methane	ND		ug/kg	200	55.	1
Hexachlorobutadiene	ND		ug/kg	180	52.	1
Hexachlorocyclopentadiene	ND		ug/kg	520	120	1
Hexachloroethane	ND		ug/kg	150	33.	1
Isophorone	ND		ug/kg	160	49.	1
Naphthalene	440		ug/kg	180	61.	1
Nitrobenzene	ND		ug/kg	160	44.	1
NitrosoDiPhenylAmine(NDPA)/DPA	ND		ug/kg	150	38.	1
n-Nitrosodi-n-propylamine	ND		ug/kg	180	54.	1
Bis(2-Ethylhexyl)phthalate	ND		ug/kg	180	48.	1
Butyl benzyl phthalate	ND		ug/kg	180	36.	1
Di-n-butylphthalate	ND		ug/kg	180	35.	1
Di-n-octylphthalate	ND		ug/kg	180	45.	1
Diethyl phthalate	ND		ug/kg	180	39.	1
Dimethyl phthalate	ND		ug/kg	180	46.	1

Project Name: MCGUINNESS BOULEVARD **Lab Number:** L1428173

Project Number: Not Specified **Report Date:** 12/02/14

SAMPLE RESULTS

Lab ID: L1428173-03 Date Collected: 11/20/14 11:15

Client ID: VHB SB-1 (0-2') Date Received: 11/21/14

Sample Location: 209-235 MCGUINESS BLVD. Field Prep: Not Specified

Parameter	Result	Qualifier	Units	RL	MDL	Dilution Factor
Semivolatile Organics by GC/MS - Westborough Lab						
Benzo(a)anthracene	1300		ug/kg	110	36.	1
Benzo(a)pyrene	1100		ug/kg	150	45.	1
Benzo(b)fluoranthene	1400		ug/kg	110	37.	1
Benzo(k)fluoranthene	580		ug/kg	110	35.	1
Chrysene	1500		ug/kg	110	36.	1
Acenaphthylene	160		ug/kg	150	34.	1
Anthracene	540		ug/kg	110	30.	1
Benzo(ghi)perylene	650		ug/kg	150	38.	1
Fluorene	290		ug/kg	180	52.	1
Phenanthrene	3600		ug/kg	110	36.	1
Dibenzo(a,h)anthracene	160		ug/kg	110	35.	1
Indeno(1,2,3-cd)Pyrene	590		ug/kg	150	41.	1
Pyrene	2800		ug/kg	110	36.	1
Biphenyl	200	J	ug/kg	420	60.	1
4-Chloroaniline	ND		ug/kg	180	48.	1
2-Nitroaniline	ND		ug/kg	180	52.	1
3-Nitroaniline	ND		ug/kg	180	50.	1
4-Nitroaniline	ND		ug/kg	180	49.	1
Dibenzofuran	260		ug/kg	180	61.	1
2-Methylnaphthalene	560		ug/kg	220	58.	1
1,2,4,5-Tetrachlorobenzene	ND		ug/kg	180	57.	1
Acetophenone	ND		ug/kg	180	57.	1
2,4,6-Trichlorophenol	ND		ug/kg	110	34.	1
P-Chloro-M-Cresol	ND		ug/kg	180	53.	1
2-Chlorophenol	ND		ug/kg	180	55.	1
2,4-Dichlorophenol	ND		ug/kg	160	59.	1
2,4-Dimethylphenol	ND		ug/kg	180	54.	1
2-Nitrophenol	ND		ug/kg	400	57.	1
4-Nitrophenol	ND		ug/kg	260	59.	1
2,4-Dinitrophenol	ND		ug/kg	880	250	1
4,6-Dinitro-o-cresol	ND		ug/kg	480	67.	1
Pentachlorophenol	ND		ug/kg	150	39.	1
Phenol	ND		ug/kg	180	54.	1
2-Methylphenol	ND		ug/kg	180	59.	1
3-Methylphenol/4-Methylphenol	ND		ug/kg	260	60.	1
2,4,5-Trichlorophenol	ND		ug/kg	180	59.	1
Benzoic Acid	ND		ug/kg	590	180	1
Benzyl Alcohol	ND		ug/kg	180	56.	1
Carbazole	320		ug/kg	180	39.	1

Project Name: MCGUINNESS BOULEVARD **Lab Number:** L1428173

Project Number: Not Specified **Report Date:** 12/02/14

SAMPLE RESULTS

Lab ID: L1428173-03 Date Collected: 11/20/14 11:15

Client ID: VHB SB-1 (0-2') Date Received: 11/21/14

Sample Location: 209-235 MCGUINESS BLVD. Field Prep: Not Specified

Parameter	Result	Qualifier	Units	RL	MDL	Dilution Factor

Semivolatile Organics by GC/MS - Westborough Lab

Surrogate	% Recovery	Qualifier	Acceptance Criteria
2-Fluorophenol	74		25-120
Phenol-d6	75		10-120
Nitrobenzene-d5	86		23-120
2-Fluorobiphenyl	84		30-120
2,4,6-Tribromophenol	81		0-136
4-Terphenyl-d14	64		18-120

Project Name: MCGUINNESS BOULEVARD **Lab Number:** L1428173

Project Number: Not Specified **Report Date:** 12/02/14

SAMPLE RESULTS

Lab ID:	L1428173-04	Date Collected:	11/20/14 11:40
Client ID:	VHB SB-1 (14-16')	Date Received:	11/21/14
Sample Location:	209-235 MCGUINESS BLVD.	Field Prep:	Not Specified
Matrix:	Soil	Extraction Method:	EPA 3546
Analytical Method:	1,8270D	Extraction Date:	11/24/14 17:54
Analytical Date:	11/25/14 19:25		
Analyst:	JB		
Percent Solids:	86%		

Parameter	Result	Qualifier	Units	RL	MDL	Dilution Factor
Semivolatile Organics by GC/MS - Westborough Lab						
Acenaphthene	ND		ug/kg	150	40.	1
1,2,4-Trichlorobenzene	ND		ug/kg	190	63.	1
Hexachlorobenzene	ND		ug/kg	120	36.	1
Bis(2-chloroethyl)ether	ND		ug/kg	170	54.	1
2-Chloronaphthalene	ND		ug/kg	190	63.	1
1,2-Dichlorobenzene	ND		ug/kg	190	63.	1
1,3-Dichlorobenzene	ND		ug/kg	190	60.	1
1,4-Dichlorobenzene	ND		ug/kg	190	58.	1
3,3'-Dichlorobenzidine	ND		ug/kg	190	51.	1
2,4-Dinitrotoluene	ND		ug/kg	190	41.	1
2,6-Dinitrotoluene	ND		ug/kg	190	49.	1
Fluoranthene	ND		ug/kg	120	35.	1
4-Chlorophenyl phenyl ether	ND		ug/kg	190	58.	1
4-Bromophenyl phenyl ether	ND		ug/kg	190	44.	1
Bis(2-chloroisopropyl)ether	ND		ug/kg	230	68.	1
Bis(2-chloroethoxy)methane	ND		ug/kg	210	58.	1
Hexachlorobutadiene	ND		ug/kg	190	54.	1
Hexachlorocyclopentadiene	ND		ug/kg	550	120	1
Hexachloroethane	ND		ug/kg	150	35.	1
Isophorone	ND		ug/kg	170	51.	1
Naphthalene	ND		ug/kg	190	64.	1
Nitrobenzene	ND		ug/kg	170	46.	1
NitrosoDiPhenylAmine(NDPA)/DPA	ND		ug/kg	150	40.	1
n-Nitrosodi-n-propylamine	ND		ug/kg	190	57.	1
Bis(2-Ethylhexyl)phthalate	ND		ug/kg	190	50.	1
Butyl benzyl phthalate	ND		ug/kg	190	38.	1
Di-n-butylphthalate	ND		ug/kg	190	37.	1
Di-n-octylphthalate	ND		ug/kg	190	47.	1
Diethyl phthalate	ND		ug/kg	190	41.	1
Dimethyl phthalate	ND		ug/kg	190	49.	1

Project Name: MCGUINNESS BOULEVARD **Lab Number:** L1428173

Project Number: Not Specified **Report Date:** 12/02/14

SAMPLE RESULTS

Lab ID: L1428173-04 Date Collected: 11/20/14 11:40

Client ID: VHB SB-1 (14-16') Date Received: 11/21/14

Sample Location: 209-235 MCGUINESS BLVD. Field Prep: Not Specified

Parameter	Result	Qualifier	Units	RL	MDL	Dilution Factor
Semivolatile Organics by GC/MS - Westborough Lab						
Benzo(a)anthracene	ND		ug/kg	120	38.	1
Benzo(a)pyrene	ND		ug/kg	150	47.	1
Benzo(b)fluoranthene	ND		ug/kg	120	39.	1
Benzo(k)fluoranthene	ND		ug/kg	120	37.	1
Chrysene	ND		ug/kg	120	38.	1
Acenaphthylene	ND		ug/kg	150	36.	1
Anthracene	ND		ug/kg	120	32.	1
Benzo(ghi)perylene	ND		ug/kg	150	40.	1
Fluorene	ND		ug/kg	190	55.	1
Phenanthrene	ND		ug/kg	120	38.	1
Dibenzo(a,h)anthracene	ND		ug/kg	120	37.	1
Indeno(1,2,3-cd)Pyrene	ND		ug/kg	150	43.	1
Pyrene	ND		ug/kg	120	37.	1
Biphenyl	ND		ug/kg	440	63.	1
4-Chloroaniline	ND		ug/kg	190	51.	1
2-Nitroaniline	ND		ug/kg	190	54.	1
3-Nitroaniline	ND		ug/kg	190	53.	1
4-Nitroaniline	ND		ug/kg	190	52.	1
Dibenzofuran	ND		ug/kg	190	64.	1
2-Methylnaphthalene	ND		ug/kg	230	61.	1
1,2,4,5-Tetrachlorobenzene	ND		ug/kg	190	60.	1
Acetophenone	ND		ug/kg	190	60.	1
2,4,6-Trichlorophenol	ND		ug/kg	120	36.	1
P-Chloro-M-Cresol	ND		ug/kg	190	56.	1
2-Chlorophenol	ND		ug/kg	190	58.	1
2,4-Dichlorophenol	ND		ug/kg	170	62.	1
2,4-Dimethylphenol	ND		ug/kg	190	57.	1
2-Nitrophenol	ND		ug/kg	420	60.	1
4-Nitrophenol	ND		ug/kg	270	62.	1
2,4-Dinitrophenol	ND		ug/kg	920	260	1
4,6-Dinitro-o-cresol	ND		ug/kg	500	70.	1
Pentachlorophenol	ND		ug/kg	150	41.	1
Phenol	ND		ug/kg	190	57.	1
2-Methylphenol	ND		ug/kg	190	62.	1
3-Methylphenol/4-Methylphenol	ND		ug/kg	280	63.	1
2,4,5-Trichlorophenol	ND		ug/kg	190	62.	1
Benzoic Acid	ND		ug/kg	620	190	1
Benzyl Alcohol	ND		ug/kg	190	59.	1
Carbazole	ND		ug/kg	190	41.	1

Project Name: MCGUINNESS BOULEVARD **Lab Number:** L1428173

Project Number: Not Specified **Report Date:** 12/02/14

SAMPLE RESULTS

Lab ID: L1428173-04 Date Collected: 11/20/14 11:40

Client ID: VHB SB-1 (14-16') Date Received: 11/21/14

Sample Location: 209-235 MCGUINESS BLVD. Field Prep: Not Specified

Parameter	Result	Qualifier	Units	RL	MDL	Dilution Factor

Semivolatile Organics by GC/MS - Westborough Lab

Surrogate	% Recovery	Qualifier	Acceptance Criteria
2-Fluorophenol	91		25-120
Phenol-d6	91		10-120
Nitrobenzene-d5	94		23-120
2-Fluorobiphenyl	91		30-120
2,4,6-Tribromophenol	96		0-136
4-Terphenyl-d14	72		18-120

Project Name: MCGUINNESS BOULEVARD **Lab Number:** L1428173

Project Number: Not Specified **Report Date:** 12/02/14

SAMPLE RESULTS

Lab ID:	L1428173-05	Date Collected:	11/20/14 11:45
Client ID:	VHB SB-1 (8-10')	Date Received:	11/21/14
Sample Location:	209-235 MCGUINESS BLVD.	Field Prep:	Not Specified
Matrix:	Soil	Extraction Method:	EPA 3546
Analytical Method:	1,8270D	Extraction Date:	11/24/14 17:54
Analytical Date:	11/25/14 19:52		
Analyst:	JB		
Percent Solids:	85%		

Parameter	Result	Qualifier	Units	RL	MDL	Dilution Factor
Semivolatile Organics by GC/MS - Westborough Lab						
Acenaphthene	ND		ug/kg	150	40.	1
1,2,4-Trichlorobenzene	ND		ug/kg	190	63.	1
Hexachlorobenzene	ND		ug/kg	120	36.	1
Bis(2-chloroethyl)ether	ND		ug/kg	170	54.	1
2-Chloronaphthalene	ND		ug/kg	190	63.	1
1,2-Dichlorobenzene	ND		ug/kg	190	63.	1
1,3-Dichlorobenzene	ND		ug/kg	190	61.	1
1,4-Dichlorobenzene	ND		ug/kg	190	59.	1
3,3'-Dichlorobenzidine	ND		ug/kg	190	51.	1
2,4-Dinitrotoluene	ND		ug/kg	190	42.	1
2,6-Dinitrotoluene	ND		ug/kg	190	50.	1
Fluoranthene	ND		ug/kg	120	36.	1
4-Chlorophenyl phenyl ether	ND		ug/kg	190	59.	1
4-Bromophenyl phenyl ether	ND		ug/kg	190	44.	1
Bis(2-chloroisopropyl)ether	ND		ug/kg	230	68.	1
Bis(2-chloroethoxy)methane	ND		ug/kg	210	58.	1
Hexachlorobutadiene	ND		ug/kg	190	54.	1
Hexachlorocyclopentadiene	ND		ug/kg	550	120	1
Hexachloroethane	ND		ug/kg	150	35.	1
Isophorone	ND		ug/kg	170	51.	1
Naphthalene	ND		ug/kg	190	64.	1
Nitrobenzene	ND		ug/kg	170	46.	1
NitrosoDiPhenylAmine(NDPA)/DPA	ND		ug/kg	150	41.	1
n-Nitrosodi-n-propylamine	ND		ug/kg	190	58.	1
Bis(2-Ethylhexyl)phthalate	ND		ug/kg	190	51.	1
Butyl benzyl phthalate	ND		ug/kg	190	38.	1
Di-n-butylphthalate	ND		ug/kg	190	37.	1
Di-n-octylphthalate	ND		ug/kg	190	48.	1
Diethyl phthalate	ND		ug/kg	190	41.	1
Dimethyl phthalate	ND		ug/kg	190	49.	1

Project Name: MCGUINNESS BOULEVARD **Lab Number:** L1428173

Project Number: Not Specified **Report Date:** 12/02/14

SAMPLE RESULTS

Lab ID: L1428173-05 Date Collected: 11/20/14 11:45

Client ID: VHB SB-1 (8-10') Date Received: 11/21/14

Sample Location: 209-235 MCGUINESS BLVD. Field Prep: Not Specified

Parameter	Result	Qualifier	Units	RL	MDL	Dilution Factor
Semivolatile Organics by GC/MS - Westborough Lab						
Benzo(a)anthracene	ND		ug/kg	120	38.	1
Benzo(a)pyrene	ND		ug/kg	150	47.	1
Benzo(b)fluoranthene	ND		ug/kg	120	39.	1
Benzo(k)fluoranthene	ND		ug/kg	120	37.	1
Chrysene	ND		ug/kg	120	38.	1
Acenaphthylene	ND		ug/kg	150	36.	1
Anthracene	ND		ug/kg	120	32.	1
Benzo(ghi)perylene	ND		ug/kg	150	40.	1
Fluorene	ND		ug/kg	190	55.	1
Phenanthrene	ND		ug/kg	120	38.	1
Dibenzo(a,h)anthracene	ND		ug/kg	120	37.	1
Indeno(1,2,3-cd)Pyrene	ND		ug/kg	150	43.	1
Pyrene	ND		ug/kg	120	38.	1
Biphenyl	ND		ug/kg	440	64.	1
4-Chloroaniline	ND		ug/kg	190	51.	1
2-Nitroaniline	ND		ug/kg	190	54.	1
3-Nitroaniline	ND		ug/kg	190	53.	1
4-Nitroaniline	ND		ug/kg	190	52.	1
Dibenzofuran	ND		ug/kg	190	64.	1
2-Methylnaphthalene	ND		ug/kg	230	62.	1
1,2,4,5-Tetrachlorobenzene	ND		ug/kg	190	60.	1
Acetophenone	ND		ug/kg	190	60.	1
2,4,6-Trichlorophenol	ND		ug/kg	120	36.	1
P-Chloro-M-Cresol	ND		ug/kg	190	56.	1
2-Chlorophenol	ND		ug/kg	190	58.	1
2,4-Dichlorophenol	ND		ug/kg	170	63.	1
2,4-Dimethylphenol	ND		ug/kg	190	58.	1
2-Nitrophenol	ND		ug/kg	420	60.	1
4-Nitrophenol	ND		ug/kg	270	63.	1
2,4-Dinitrophenol	ND		ug/kg	930	260	1
4,6-Dinitro-o-cresol	ND		ug/kg	500	71.	1
Pentachlorophenol	ND		ug/kg	150	41.	1
Phenol	ND		ug/kg	190	57.	1
2-Methylphenol	ND		ug/kg	190	62.	1
3-Methylphenol/4-Methylphenol	ND		ug/kg	280	63.	1
2,4,5-Trichlorophenol	ND		ug/kg	190	63.	1
Benzoic Acid	ND		ug/kg	630	200	1
Benzyl Alcohol	ND		ug/kg	190	60.	1
Carbazole	ND		ug/kg	190	42.	1

Project Name: MCGUINNESS BOULEVARD **Lab Number:** L1428173

Project Number: Not Specified **Report Date:** 12/02/14

SAMPLE RESULTS

Lab ID: L1428173-05 Date Collected: 11/20/14 11:45

Client ID: VHB SB-1 (8-10') Date Received: 11/21/14

Sample Location: 209-235 MCGUINESS BLVD. Field Prep: Not Specified

Parameter	Result	Qualifier	Units	RL	MDL	Dilution Factor

Semivolatile Organics by GC/MS - Westborough Lab

Surrogate	% Recovery	Qualifier	Acceptance Criteria
2-Fluorophenol	68		25-120
Phenol-d6	74		10-120
Nitrobenzene-d5	106		23-120
2-Fluorobiphenyl	66		30-120
2,4,6-Tribromophenol	81		0-136
4-Terphenyl-d14	63		18-120

Project Name: MCGUINNESS BOULEVARD **Lab Number:** L1428173

Project Number: Not Specified **Report Date:** 12/02/14

SAMPLE RESULTS

Lab ID:	L1428173-06	Date Collected:	11/20/14 13:20
Client ID:	VHB SB-5 (0-2')	Date Received:	11/21/14
Sample Location:	209-235 MCGUINESS BLVD.	Field Prep:	Not Specified
Matrix:	Soil	Extraction Method:	EPA 3546
Analytical Method:	1,8270D	Extraction Date:	11/24/14 17:54
Analytical Date:	11/25/14 20:18		
Analyst:	PS		
Percent Solids:	85%		

Parameter	Result	Qualifier	Units	RL	MDL	Dilution Factor
Semivolatile Organics by GC/MS - Westborough Lab						
Acenaphthene	ND		ug/kg	150	40.	1
1,2,4-Trichlorobenzene	ND		ug/kg	190	63.	1
Hexachlorobenzene	ND		ug/kg	120	36.	1
Bis(2-chloroethyl)ether	ND		ug/kg	170	54.	1
2-Chloronaphthalene	ND		ug/kg	190	63.	1
1,2-Dichlorobenzene	ND		ug/kg	190	63.	1
1,3-Dichlorobenzene	ND		ug/kg	190	61.	1
1,4-Dichlorobenzene	ND		ug/kg	190	59.	1
3,3'-Dichlorobenzidine	ND		ug/kg	190	51.	1
2,4-Dinitrotoluene	ND		ug/kg	190	42.	1
2,6-Dinitrotoluene	ND		ug/kg	190	49.	1
Fluoranthene	470		ug/kg	120	35.	1
4-Chlorophenyl phenyl ether	ND		ug/kg	190	59.	1
4-Bromophenyl phenyl ether	ND		ug/kg	190	44.	1
Bis(2-chloroisopropyl)ether	ND		ug/kg	230	68.	1
Bis(2-chloroethoxy)methane	ND		ug/kg	210	58.	1
Hexachlorobutadiene	ND		ug/kg	190	54.	1
Hexachlorocyclopentadiene	ND		ug/kg	550	120	1
Hexachloroethane	ND		ug/kg	150	35.	1
Isophorone	ND		ug/kg	170	51.	1
Naphthalene	ND		ug/kg	190	64.	1
Nitrobenzene	ND		ug/kg	170	46.	1
NitrosoDiPhenylAmine(NDPA)/DPA	ND		ug/kg	150	40.	1
n-Nitrosodi-n-propylamine	ND		ug/kg	190	58.	1
Bis(2-Ethylhexyl)phthalate	ND		ug/kg	190	50.	1
Butyl benzyl phthalate	4600		ug/kg	190	38.	1
Di-n-butylphthalate	ND		ug/kg	190	37.	1
Di-n-octylphthalate	ND		ug/kg	190	47.	1
Diethyl phthalate	ND		ug/kg	190	41.	1
Dimethyl phthalate	ND		ug/kg	190	49.	1

Project Name: MCGUINNESS BOULEVARD **Lab Number:** L1428173

Project Number: Not Specified **Report Date:** 12/02/14

SAMPLE RESULTS

Lab ID: L1428173-06 Date Collected: 11/20/14 13:20

Client ID: VHB SB-5 (0-2') Date Received: 11/21/14

Sample Location: 209-235 MCGUINESS BLVD. Field Prep: Not Specified

Parameter	Result	Qualifier	Units	RL	MDL	Dilution Factor
Semivolatile Organics by GC/MS - Westborough Lab						
Benzo(a)anthracene	320		ug/kg	120	38.	1
Benzo(a)pyrene	250		ug/kg	150	47.	1
Benzo(b)fluoranthene	300		ug/kg	120	39.	1
Benzo(k)fluoranthene	140		ug/kg	120	37.	1
Chrysene	300		ug/kg	120	38.	1
Acenaphthylene	40	J	ug/kg	150	36.	1
Anthracene	76	J	ug/kg	120	32.	1
Benzo(ghi)perylene	120	J	ug/kg	150	40.	1
Fluorene	ND		ug/kg	190	55.	1
Phenanthrene	290		ug/kg	120	38.	1
Dibenzo(a,h)anthracene	ND		ug/kg	120	37.	1
Indeno(1,2,3-cd)Pyrene	110	J	ug/kg	150	43.	1
Pyrene	430		ug/kg	120	38.	1
Biphenyl	ND		ug/kg	440	64.	1
4-Chloroaniline	ND		ug/kg	190	51.	1
2-Nitroaniline	ND		ug/kg	190	54.	1
3-Nitroaniline	ND		ug/kg	190	53.	1
4-Nitroaniline	ND		ug/kg	190	52.	1
Dibenzofuran	ND		ug/kg	190	64.	1
2-Methylnaphthalene	ND		ug/kg	230	62.	1
1,2,4,5-Tetrachlorobenzene	ND		ug/kg	190	60.	1
Acetophenone	ND		ug/kg	190	60.	1
2,4,6-Trichlorophenol	ND		ug/kg	120	36.	1
P-Chloro-M-Cresol	ND		ug/kg	190	56.	1
2-Chlorophenol	ND		ug/kg	190	58.	1
2,4-Dichlorophenol	ND		ug/kg	170	62.	1
2,4-Dimethylphenol	ND		ug/kg	190	58.	1
2-Nitrophenol	ND		ug/kg	420	60.	1
4-Nitrophenol	ND		ug/kg	270	62.	1
2,4-Dinitrophenol	ND		ug/kg	930	260	1
4,6-Dinitro-o-cresol	ND		ug/kg	500	71.	1
Pentachlorophenol	ND		ug/kg	150	41.	1
Phenol	ND		ug/kg	190	57.	1
2-Methylphenol	ND		ug/kg	190	62.	1
3-Methylphenol/4-Methylphenol	ND		ug/kg	280	63.	1
2,4,5-Trichlorophenol	ND		ug/kg	190	62.	1
Benzoic Acid	ND		ug/kg	620	200	1
Benzyl Alcohol	63	J	ug/kg	190	59.	1
Carbazole	ND		ug/kg	190	41.	1

Project Name: MCGUINNESS BOULEVARD **Lab Number:** L1428173

Project Number: Not Specified **Report Date:** 12/02/14

SAMPLE RESULTS

Lab ID: L1428173-06 Date Collected: 11/20/14 13:20

Client ID: VHB SB-5 (0-2') Date Received: 11/21/14

Sample Location: 209-235 MCGUINESS BLVD. Field Prep: Not Specified

Parameter	Result	Qualifier	Units	RL	MDL	Dilution Factor

Semivolatile Organics by GC/MS - Westborough Lab

Surrogate	% Recovery	Qualifier	Acceptance Criteria
2-Fluorophenol	**3**	Q	25-120
Phenol-d6	21		10-120
Nitrobenzene-d5	58		23-120
2-Fluorobiphenyl	53		30-120
2,4,6-Tribromophenol	1		0-136
4-Terphenyl-d14	38		18-120

Project Name: MCGUINNESS BOULEVARD **Lab Number:** L1428173

Project Number: Not Specified **Report Date:** 12/02/14

SAMPLE RESULTS

Lab ID:	L1428173-06 RE	Date Collected:	11/20/14 13:20
Client ID:	VHB SB-5 (0-2')	Date Received:	11/21/14
Sample Location:	209-235 MCGUINESS BLVD.	Field Prep:	Not Specified
Matrix:	Soil	Extraction Method:	EPA 3546
Analytical Method:	1,8270D	Extraction Date:	11/26/14 10:28
Analytical Date:	11/26/14 22:42		
Analyst:	PS		
Percent Solids:	85%		

Parameter	Result	Qualifier	Units	RL	MDL	Dilution Factor
Semivolatile Organics by GC/MS - Westborough Lab						
Acenaphthene	ND		ug/kg	160	40.	1
1,2,4-Trichlorobenzene	ND		ug/kg	190	64.	1
Hexachlorobenzene	ND		ug/kg	120	36.	1
Bis(2-chloroethyl)ether	ND		ug/kg	170	54.	1
2-Chloronaphthalene	ND		ug/kg	190	63.	1
1,2-Dichlorobenzene	ND		ug/kg	190	64.	1
1,3-Dichlorobenzene	ND		ug/kg	190	61.	1
1,4-Dichlorobenzene	ND		ug/kg	190	59.	1
3,3'-Dichlorobenzidine	ND		ug/kg	190	52.	1
2,4-Dinitrotoluene	ND		ug/kg	190	42.	1
2,6-Dinitrotoluene	ND		ug/kg	190	50.	1
Fluoranthene	580		ug/kg	120	36.	1
4-Chlorophenyl phenyl ether	ND		ug/kg	190	59.	1
4-Bromophenyl phenyl ether	ND		ug/kg	190	45.	1
Bis(2-chloroisopropyl)ether	ND		ug/kg	230	68.	1
Bis(2-chloroethoxy)methane	ND		ug/kg	210	59.	1
Hexachlorobutadiene	ND		ug/kg	190	55.	1
Hexachlorocyclopentadiene	ND		ug/kg	560	120	1
Hexachloroethane	ND		ug/kg	160	35.	1
Isophorone	ND		ug/kg	170	52.	1
Naphthalene	ND		ug/kg	190	64.	1
Nitrobenzene	ND		ug/kg	170	46.	1
NitrosoDiPhenylAmine(NDPA)/DPA	ND		ug/kg	160	41.	1
n-Nitrosodi-n-propylamine	ND		ug/kg	190	58.	1
Bis(2-Ethylhexyl)phthalate	ND		ug/kg	190	51.	1
Butyl benzyl phthalate	2900		ug/kg	190	38.	1
Di-n-butylphthalate	ND		ug/kg	190	38.	1
Di-n-octylphthalate	ND		ug/kg	190	48.	1
Diethyl phthalate	ND		ug/kg	190	41.	1
Dimethyl phthalate	ND		ug/kg	190	49.	1

Project Name: MCGUINNESS BOULEVARD **Lab Number:** L1428173

Project Number: Not Specified **Report Date:** 12/02/14

SAMPLE RESULTS

Lab ID: L1428173-06 RE Date Collected: 11/20/14 13:20

Client ID: VHB SB-5 (0-2') Date Received: 11/21/14

Sample Location: 209-235 MCGUINESS BLVD. Field Prep: Not Specified

Parameter	Result	Qualifier	Units	RL	MDL	Dilution Factor
Semivolatile Organics by GC/MS - Westborough Lab						
Benzo(a)anthracene	390		ug/kg	120	38.	1
Benzo(a)pyrene	360		ug/kg	160	48.	1
Benzo(b)fluoranthene	420		ug/kg	120	39.	1
Benzo(k)fluoranthene	180		ug/kg	120	37.	1
Chrysene	330		ug/kg	120	38.	1
Acenaphthylene	52	J	ug/kg	160	36.	1
Anthracene	67	J	ug/kg	120	32.	1
Benzo(ghi)perylene	180		ug/kg	160	40.	1
Fluorene	ND		ug/kg	190	56.	1
Phenanthrene	260		ug/kg	120	38.	1
Dibenzo(a,h)anthracene	61	J	ug/kg	120	38.	1
Indeno(1,2,3-cd)Pyrene	270		ug/kg	160	43.	1
Pyrene	530		ug/kg	120	38.	1
Biphenyl	ND		ug/kg	440	64.	1
4-Chloroaniline	ND		ug/kg	190	51.	1
2-Nitroaniline	ND		ug/kg	190	55.	1
3-Nitroaniline	ND		ug/kg	190	54.	1
4-Nitroaniline	ND		ug/kg	190	52.	1
Dibenzofuran	ND		ug/kg	190	65.	1
2-Methylnaphthalene	ND		ug/kg	230	62.	1
1,2,4,5-Tetrachlorobenzene	ND		ug/kg	190	60.	1
Acetophenone	ND		ug/kg	190	60.	1
2,4,6-Trichlorophenol	ND		ug/kg	120	37.	1
P-Chloro-M-Cresol	ND		ug/kg	190	56.	1
2-Chlorophenol	ND		ug/kg	190	59.	1
2,4-Dichlorophenol	ND		ug/kg	170	63.	1
2,4-Dimethylphenol	ND		ug/kg	190	58.	1
2-Nitrophenol	ND		ug/kg	420	61.	1
4-Nitrophenol	ND		ug/kg	270	63.	1
2,4-Dinitrophenol	ND		ug/kg	930	260	1
4,6-Dinitro-o-cresol	ND		ug/kg	500	71.	1
Pentachlorophenol	ND		ug/kg	160	42.	1
Phenol	ND		ug/kg	190	58.	1
2-Methylphenol	ND		ug/kg	190	62.	1
3-Methylphenol/4-Methylphenol	ND		ug/kg	280	64.	1
2,4,5-Trichlorophenol	ND		ug/kg	190	63.	1
Benzoic Acid	ND		ug/kg	630	200	1
Benzyl Alcohol	77	J	ug/kg	190	60.	1
Carbazole	ND		ug/kg	190	42.	1

Project Name: MCGUINNESS BOULEVARD **Lab Number:** L1428173

Project Number: Not Specified **Report Date:** 12/02/14

SAMPLE RESULTS

Lab ID: L1428173-06 RE Date Collected: 11/20/14 13:20

Client ID: VHB SB-5 (0-2') Date Received: 11/21/14

Sample Location: 209-235 MCGUINESS BLVD. Field Prep: Not Specified

Parameter	Result	Qualifier	Units	RL	MDL	Dilution Factor

Semivolatile Organics by GC/MS - Westborough Lab

Surrogate	% Recovery	Qualifier	Acceptance Criteria
2-Fluorophenol	**5**	Q	25-120
Phenol-d6	34		10-120
Nitrobenzene-d5	80		23-120
2-Fluorobiphenyl	66		30-120
2,4,6-Tribromophenol	7		0-136
4-Terphenyl-d14	62		18-120

Project Name: MCGUINNESS BOULEVARD **Lab Number:** L1428173

Project Number: Not Specified **Report Date:** 12/02/14

SAMPLE RESULTS

Lab ID:	L1428173-07	Date Collected:	11/20/14 13:45
Client ID:	VHB SB-5 (14-16')	Date Received:	11/21/14
Sample Location:	209-235 MCGUINESS BLVD.	Field Prep:	Not Specified
Matrix:	Soil	Extraction Method:	EPA 3546
Analytical Method:	1,8270D	Extraction Date:	11/24/14 17:54
Analytical Date:	11/25/14 20:46		
Analyst:	JB		
Percent Solids:	67%		

Parameter	Result	Qualifier	Units	RL	MDL	Dilution Factor
Semivolatile Organics by GC/MS - Westborough Lab						
Acenaphthene	ND		ug/kg	190	50.	1
1,2,4-Trichlorobenzene	ND		ug/kg	240	79.	1
Hexachlorobenzene	ND		ug/kg	140	45.	1
Bis(2-chloroethyl)ether	ND		ug/kg	220	68.	1
2-Chloronaphthalene	ND		ug/kg	240	78.	1
1,2-Dichlorobenzene	ND		ug/kg	240	79.	1
1,3-Dichlorobenzene	ND		ug/kg	240	76.	1
1,4-Dichlorobenzene	ND		ug/kg	240	73.	1
3,3'-Dichlorobenzidine	ND		ug/kg	240	64.	1
2,4-Dinitrotoluene	ND		ug/kg	240	52.	1
2,6-Dinitrotoluene	ND		ug/kg	240	62.	1
Fluoranthene	110	J	ug/kg	140	44.	1
4-Chlorophenyl phenyl ether	ND		ug/kg	240	73.	1
4-Bromophenyl phenyl ether	ND		ug/kg	240	55.	1
Bis(2-chloroisopropyl)ether	ND		ug/kg	290	85.	1
Bis(2-chloroethoxy)methane	ND		ug/kg	260	73.	1
Hexachlorobutadiene	ND		ug/kg	240	68.	1
Hexachlorocyclopentadiene	ND		ug/kg	690	150	1
Hexachloroethane	ND		ug/kg	190	44.	1
Isophorone	ND		ug/kg	220	64.	1
Naphthalene	ND		ug/kg	240	80.	1
Nitrobenzene	ND		ug/kg	220	57.	1
NitrosoDiPhenylAmine(NDPA)/DPA	ND		ug/kg	190	50.	1
n-Nitrosodi-n-propylamine	ND		ug/kg	240	72.	1
Bis(2-Ethylhexyl)phthalate	ND		ug/kg	240	63.	1
Butyl benzyl phthalate	ND		ug/kg	240	47.	1
Di-n-butylphthalate	ND		ug/kg	240	46.	1
Di-n-octylphthalate	ND		ug/kg	240	59.	1
Diethyl phthalate	ND		ug/kg	240	51.	1
Dimethyl phthalate	ND		ug/kg	240	61.	1

Project Name: MCGUINNESS BOULEVARD **Lab Number:** L1428173

Project Number: Not Specified **Report Date:** 12/02/14

SAMPLE RESULTS

Lab ID: L1428173-07 Date Collected: 11/20/14 13:45

Client ID: VHB SB-5 (14-16') Date Received: 11/21/14

Sample Location: 209-235 MCGUINESS BLVD. Field Prep: Not Specified

Parameter	Result	Qualifier	Units	RL	MDL	Dilution Factor
Semivolatile Organics by GC/MS - Westborough Lab						
Benzo(a)anthracene	100	J	ug/kg	140	47.	1
Benzo(a)pyrene	84	J	ug/kg	190	59.	1
Benzo(b)fluoranthene	110	J	ug/kg	140	49.	1
Benzo(k)fluoranthene	ND		ug/kg	140	46.	1
Chrysene	100	J	ug/kg	140	47.	1
Acenaphthylene	ND		ug/kg	190	45.	1
Anthracene	ND		ug/kg	140	40.	1
Benzo(ghi)perylene	ND		ug/kg	190	50.	1
Fluorene	ND		ug/kg	240	69.	1
Phenanthrene	55	J	ug/kg	140	47.	1
Dibenzo(a,h)anthracene	ND		ug/kg	140	47.	1
Indeno(1,2,3-cd)Pyrene	ND		ug/kg	190	53.	1
Pyrene	97	J	ug/kg	140	47.	1
Biphenyl	ND		ug/kg	550	79.	1
4-Chloroaniline	ND		ug/kg	240	64.	1
2-Nitroaniline	ND		ug/kg	240	68.	1
3-Nitroaniline	ND		ug/kg	240	66.	1
4-Nitroaniline	ND		ug/kg	240	65.	1
Dibenzofuran	ND		ug/kg	240	80.	1
2-Methylnaphthalene	ND		ug/kg	290	77.	1
1,2,4,5-Tetrachlorobenzene	ND		ug/kg	240	74.	1
Acetophenone	ND		ug/kg	240	75.	1
2,4,6-Trichlorophenol	ND		ug/kg	140	45.	1
P-Chloro-M-Cresol	ND		ug/kg	240	70.	1
2-Chlorophenol	ND		ug/kg	240	73.	1
2,4-Dichlorophenol	ND		ug/kg	220	78.	1
2,4-Dimethylphenol	ND		ug/kg	240	72.	1
2-Nitrophenol	ND		ug/kg	520	75.	1
4-Nitrophenol	ND		ug/kg	340	78.	1
2,4-Dinitrophenol	ND		ug/kg	1200	330	1
4,6-Dinitro-o-cresol	ND		ug/kg	620	88.	1
Pentachlorophenol	ND		ug/kg	190	52.	1
Phenol	ND		ug/kg	240	71.	1
2-Methylphenol	ND		ug/kg	240	78.	1
3-Methylphenol/4-Methylphenol	220	J	ug/kg	350	79.	1
2,4,5-Trichlorophenol	ND		ug/kg	240	78.	1
Benzoic Acid	ND		ug/kg	780	240	1
Benzyl Alcohol	ND		ug/kg	240	74.	1
Carbazole	ND		ug/kg	240	52.	1

Project Name: MCGUINNESS BOULEVARD **Lab Number:** L1428173

Project Number: Not Specified **Report Date:** 12/02/14

SAMPLE RESULTS

Lab ID: L1428173-07 Date Collected: 11/20/14 13:45

Client ID: VHB SB-5 (14-16') Date Received: 11/21/14

Sample Location: 209-235 MCGUINESS BLVD. Field Prep: Not Specified

Parameter	Result	Qualifier	Units	RL	MDL	Dilution Factor

Semivolatile Organics by GC/MS - Westborough Lab

Surrogate	% Recovery	Qualifier	Acceptance Criteria
2-Fluorophenol	57		25-120
Phenol-d6	59		10-120
Nitrobenzene-d5	65		23-120
2-Fluorobiphenyl	60		30-120
2,4,6-Tribromophenol	67		0-136
4-Terphenyl-d14	35		18-120

Project Name: MCGUINNESS BOULEVARD **Lab Number:** L1428173

Project Number: Not Specified **Report Date:** 12/02/14

SAMPLE RESULTS

Lab ID:	L1428173-08	Date Collected:	11/20/14 13:50
Client ID:	VHB GW-1	Date Received:	11/21/14
Sample Location:	209-235 MCGUINESS BLVD.	Field Prep:	Not Specified
Matrix:	Water	Extraction Method:	EPA 3510C
Analytical Method:	1,8270D	Extraction Date:	11/24/14 16:33
Analytical Date:	11/26/14 22:51		
Analyst:	PS		

Parameter	Result	Qualifier	Units	RL	MDL	Dilution Factor
Semivolatile Organics by GC/MS - Westborough Lab						
1,2,4-Trichlorobenzene	ND		ug/l	5.0	0.21	1
Bis(2-chloroethyl)ether	ND		ug/l	2.0	0.41	1
1,2-Dichlorobenzene	ND		ug/l	2.0	0.30	1
1,3-Dichlorobenzene	ND		ug/l	2.0	0.35	1
1,4-Dichlorobenzene	ND		ug/l	2.0	0.32	1
3,3'-Dichlorobenzidine	ND		ug/l	5.0	0.48	1
2,4-Dinitrotoluene	ND		ug/l	5.0	1.0	1
2,6-Dinitrotoluene	ND		ug/l	5.0	0.89	1
4-Chlorophenyl phenyl ether	ND		ug/l	2.0	0.36	1
4-Bromophenyl phenyl ether	ND		ug/l	2.0	0.43	1
Bis(2-chloroisopropyl)ether	ND		ug/l	2.0	0.60	1
Bis(2-chloroethoxy)methane	ND		ug/l	5.0	0.60	1
Hexachlorocyclopentadiene	ND		ug/l	20	0.58	1
Isophorone	ND		ug/l	5.0	0.79	1
Nitrobenzene	ND		ug/l	2.0	0.40	1
NitrosoDiPhenylAmine(NDPA)/DPA	ND		ug/l	2.0	0.34	1
n-Nitrosodi-n-propylamine	ND		ug/l	5.0	0.64	1
Bis(2-Ethylhexyl)phthalate	1.5	J	ug/l	3.0	0.93	1
Butyl benzyl phthalate	1.3	J	ug/l	5.0	1.1	1
Di-n-butylphthalate	ND		ug/l	5.0	0.77	1
Di-n-octylphthalate	ND		ug/l	5.0	1.2	1
Diethyl phthalate	ND		ug/l	5.0	0.39	1
Dimethyl phthalate	ND		ug/l	5.0	0.33	1
Biphenyl	ND		ug/l	2.0	0.24	1
4-Chloroaniline	ND		ug/l	5.0	0.84	1
2-Nitroaniline	ND		ug/l	5.0	0.96	1
3-Nitroaniline	ND		ug/l	5.0	0.67	1
4-Nitroaniline	ND		ug/l	5.0	0.83	1
Dibenzofuran	ND		ug/l	2.0	0.22	1
1,2,4,5-Tetrachlorobenzene	ND		ug/l	10	0.36	1

Project Name: MCGUINNESS BOULEVARD **Lab Number:** L1428173

Project Number: Not Specified **Report Date:** 12/02/14

SAMPLE RESULTS

Lab ID: L1428173-08 Date Collected: 11/20/14 13:50

Client ID: VHB GW-1 Date Received: 11/21/14

Sample Location: 209-235 MCGUINESS BLVD. Field Prep: Not Specified

Parameter	Result	Qualifier	Units	RL	MDL	Dilution Factor
Semivolatile Organics by GC/MS - Westborough Lab						
Acetophenone	ND		ug/l	5.0	0.43	1
2,4,6-Trichlorophenol	ND		ug/l	5.0	0.78	1
P-Chloro-M-Cresol	ND		ug/l	2.0	0.54	1
2-Chlorophenol	ND		ug/l	2.0	0.58	1
2,4-Dichlorophenol	ND		ug/l	5.0	0.56	1
2,4-Dimethylphenol	ND		ug/l	5.0	0.58	1
2-Nitrophenol	ND		ug/l	10	1.0	1
4-Nitrophenol	ND		ug/l	10	1.1	1
2,4-Dinitrophenol	ND		ug/l	20	1.4	1
4,6-Dinitro-o-cresol	ND		ug/l	10	1.4	1
Phenol	ND		ug/l	5.0	0.27	1
2-Methylphenol	ND		ug/l	5.0	0.70	1
3-Methylphenol/4-Methylphenol	ND		ug/l	5.0	0.72	1
2,4,5-Trichlorophenol	ND		ug/l	5.0	0.75	1
Benzoic Acid	ND		ug/l	50	1.0	1
Benzyl Alcohol	ND		ug/l	2.0	0.68	1
Carbazole	ND		ug/l	2.0	0.37	1

Surrogate	% Recovery	Qualifier	Acceptance Criteria
2-Fluorophenol	34		21-120
Phenol-d6	27		10-120
Nitrobenzene-d5	62		23-120
2-Fluorobiphenyl	74		15-120
2,4,6-Tribromophenol	94		10-120
4-Terphenyl-d14	102		41-149

Project Name: MCGUINNESS BOULEVARD **Lab Number:** L1428173

Project Number: Not Specified **Report Date:** 12/02/14

SAMPLE RESULTS

Lab ID:	L1428173-08	Date Collected:	11/20/14 13:50
Client ID:	VHB GW-1	Date Received:	11/21/14
Sample Location:	209-235 MCGUINESS BLVD.	Field Prep:	Not Specified
Matrix:	Water	Extraction Method:	EPA 3510C
Analytical Method:	1,8270D-SIM	Extraction Date:	11/24/14 16:37
Analytical Date:	11/30/14 05:18		
Analyst:	MW		

Parameter	Result	Qualifier	Units	RL	MDL	Dilution Factor
Semivolatile Organics by GC/MS-SIM - Westborough Lab						
Acenaphthene	ND		ug/l	0.20	0.06	1
2-Chloronaphthalene	ND		ug/l	0.20	0.07	1
Fluoranthene	0.06	J	ug/l	0.20	0.04	1
Hexachlorobutadiene	ND		ug/l	0.50	0.07	1
Naphthalene	ND		ug/l	0.20	0.06	1
Benzo(a)anthracene	ND		ug/l	0.20	0.06	1
Benzo(a)pyrene	ND		ug/l	0.20	0.07	1
Benzo(b)fluoranthene	ND		ug/l	0.20	0.07	1
Benzo(k)fluoranthene	ND		ug/l	0.20	0.07	1
Chrysene	ND		ug/l	0.20	0.05	1
Acenaphthylene	ND		ug/l	0.20	0.05	1
Anthracene	ND		ug/l	0.20	0.06	1
Benzo(ghi)perylene	ND		ug/l	0.20	0.07	1
Fluorene	ND		ug/l	0.20	0.06	1
Phenanthrene	ND		ug/l	0.20	0.06	1
Dibenzo(a,h)anthracene	ND		ug/l	0.20	0.07	1
Indeno(1,2,3-cd)Pyrene	ND		ug/l	0.20	0.08	1
Pyrene	0.10	J	ug/l	0.20	0.06	1
2-Methylnaphthalene	ND		ug/l	0.20	0.06	1
Pentachlorophenol	ND		ug/l	0.80	0.19	1
Hexachlorobenzene	ND		ug/l	0.80	0.01	1
Hexachloroethane	ND		ug/l	0.80	0.07	1

Project Name: MCGUINNESS BOULEVARD **Lab Number:** L1428173

Project Number: Not Specified **Report Date:** 12/02/14

SAMPLE RESULTS

Lab ID: L1428173-08 Date Collected: 11/20/14 13:50

Client ID: VHB GW-1 Date Received: 11/21/14

Sample Location: 209-235 MCGUINESS BLVD. Field Prep: Not Specified

Parameter	Result	Qualifier	Units	RL	MDL	Dilution Factor

Semivolatile Organics by GC/MS-SIM - Westborough Lab

Surrogate	% Recovery	Qualifier	Acceptance Criteria
2-Fluorophenol	31		21-120
Phenol-d6	23		10-120
Nitrobenzene-d5	60		23-120
2-Fluorobiphenyl	80		15-120
2,4,6-Tribromophenol	**132**	Q	10-120
4-Terphenyl-d14	78		41-149

Project Name: MCGUINNESS BOULEVARD
Lab Number: L1428173
Project Number: Not Specified
Report Date: 12/02/14

SAMPLE RESULTS

Lab ID:	L1428173-09 D2	Date Collected:	11/20/14 14:40
Client ID:	VHB SB-3 (0-2')	Date Received:	11/21/14
Sample Location:	209-235 MCGUINESS BLVD.	Field Prep:	Not Specified
Matrix:	Soil	Extraction Method:	EPA 3546
Analytical Method:	1,8270D	Extraction Date:	11/24/14 17:54
Analytical Date:	11/27/14 00:27		
Analyst:	JB		
Percent Solids:	85%		

Parameter	Result	Qualifier	Units	RL	MDL	Dilution Factor
Semivolatile Organics by GC/MS - Westborough Lab						
Fluoranthene	150000		ug/kg	5800	1800	50
Benzo(a)anthracene	59000		ug/kg	5800	1900	50
Benzo(a)pyrene	47000		ug/kg	7800	2400	50
Benzo(b)fluoranthene	48000		ug/kg	5800	2000	50
Chrysene	59000		ug/kg	5800	1900	50
Phenanthrene	150000		ug/kg	5800	1900	50
Pyrene	110000		ug/kg	5800	1900	50

Project Name: MCGUINNESS BOULEVARD **Lab Number:** L1428173

Project Number: Not Specified **Report Date:** 12/02/14

SAMPLE RESULTS

Lab ID:	L1428173-09 D	Date Collected:	11/20/14 14:40
Client ID:	VHB SB-3 (0-2')	Date Received:	11/21/14
Sample Location:	209-235 MCGUINESS BLVD.	Field Prep:	Not Specified
Matrix:	Soil	Extraction Method:	EPA 3546
Analytical Method:	1,8270D	Extraction Date:	11/24/14 17:54
Analytical Date:	11/25/14 21:13		
Analyst:	JB		
Percent Solids:	85%		

Parameter	Result	Qualifier	Units	RL	MDL	Dilution Factor
Semivolatile Organics by GC/MS - Westborough Lab						
Acenaphthene	16000		ug/kg	780	200	5
1,2,4-Trichlorobenzene	ND		ug/kg	970	320	5
Hexachlorobenzene	ND		ug/kg	580	180	5
Bis(2-chloroethyl)ether	ND		ug/kg	870	270	5
2-Chloronaphthalene	ND		ug/kg	970	320	5
1,2-Dichlorobenzene	ND		ug/kg	970	320	5
1,3-Dichlorobenzene	ND		ug/kg	970	300	5
1,4-Dichlorobenzene	ND		ug/kg	970	290	5
3,3'-Dichlorobenzidine	ND		ug/kg	970	260	5
2,4-Dinitrotoluene	ND		ug/kg	970	210	5
2,6-Dinitrotoluene	ND		ug/kg	970	250	5
Fluoranthene	140000	E	ug/kg	580	180	5
4-Chlorophenyl phenyl ether	ND		ug/kg	970	290	5
4-Bromophenyl phenyl ether	ND		ug/kg	970	220	5
Bis(2-chloroisopropyl)ether	ND		ug/kg	1200	340	5
Bis(2-chloroethoxy)methane	ND		ug/kg	1000	290	5
Hexachlorobutadiene	ND		ug/kg	970	270	5
Hexachlorocyclopentadiene	ND		ug/kg	2800	620	5
Hexachloroethane	ND		ug/kg	780	180	5
Isophorone	ND		ug/kg	870	260	5
Naphthalene	16000		ug/kg	970	320	5
Nitrobenzene	ND		ug/kg	870	230	5
NitrosoDiPhenylAmine(NDPA)/DPA	ND		ug/kg	780	200	5
n-Nitrosodi-n-propylamine	ND		ug/kg	970	290	5
Bis(2-Ethylhexyl)phthalate	ND		ug/kg	970	250	5
Butyl benzyl phthalate	ND		ug/kg	970	190	5
Di-n-butylphthalate	ND		ug/kg	970	190	5
Di-n-octylphthalate	ND		ug/kg	970	240	5
Diethyl phthalate	ND		ug/kg	970	200	5
Dimethyl phthalate	ND		ug/kg	970	250	5

Project Name: MCGUINNESS BOULEVARD **Lab Number:** L1428173

Project Number: Not Specified **Report Date:** 12/02/14

SAMPLE RESULTS

Lab ID: L1428173-09 D Date Collected: 11/20/14 14:40

Client ID: VHB SB-3 (0-2') Date Received: 11/21/14

Sample Location: 209-235 MCGUINESS BLVD. Field Prep: Not Specified

Parameter	Result	Qualifier	Units	RL	MDL	Dilution Factor
Semivolatile Organics by GC/MS - Westborough Lab						
Benzo(a)anthracene	55000	E	ug/kg	580	190	5
Benzo(a)pyrene	51000	E	ug/kg	780	240	5
Benzo(b)fluoranthene	80000	E	ug/kg	580	200	5
Benzo(k)fluoranthene	23000		ug/kg	580	180	5
Chrysene	55000	E	ug/kg	580	190	5
Acenaphthylene	2900		ug/kg	780	180	5
Anthracene	34000		ug/kg	580	160	5
Benzo(ghi)perylene	26000		ug/kg	780	200	5
Fluorene	20000		ug/kg	970	280	5
Phenanthrene	130000	E	ug/kg	580	190	5
Dibenzo(a,h)anthracene	13000		ug/kg	580	190	5
Indeno(1,2,3-cd)Pyrene	29000		ug/kg	780	220	5
Pyrene	110000	E	ug/kg	580	190	5
Biphenyl	1600	J	ug/kg	2200	320	5
4-Chloroaniline	ND		ug/kg	970	260	5
2-Nitroaniline	ND		ug/kg	970	270	5
3-Nitroaniline	ND		ug/kg	970	270	5
4-Nitroaniline	ND		ug/kg	970	260	5
Dibenzofuran	14000		ug/kg	970	320	5
2-Methylnaphthalene	6200		ug/kg	1200	310	5
1,2,4,5-Tetrachlorobenzene	ND		ug/kg	970	300	5
Acetophenone	ND		ug/kg	970	300	5
2,4,6-Trichlorophenol	ND		ug/kg	580	180	5
P-Chloro-M-Cresol	ND		ug/kg	970	280	5
2-Chlorophenol	ND		ug/kg	970	290	5
2,4-Dichlorophenol	ND		ug/kg	870	310	5
2,4-Dimethylphenol	ND		ug/kg	970	290	5
2-Nitrophenol	ND		ug/kg	2100	300	5
4-Nitrophenol	ND		ug/kg	1400	310	5
2,4-Dinitrophenol	ND		ug/kg	4600	1300	5
4,6-Dinitro-o-cresol	ND		ug/kg	2500	350	5
Pentachlorophenol	ND		ug/kg	780	210	5
Phenol	ND		ug/kg	970	290	5
2-Methylphenol	ND		ug/kg	970	310	5
3-Methylphenol/4-Methylphenol	480	J	ug/kg	1400	320	5
2,4,5-Trichlorophenol	ND		ug/kg	970	310	5
Benzoic Acid	ND		ug/kg	3100	980	5
Benzyl Alcohol	ND		ug/kg	970	300	5
Carbazole	24000		ug/kg	970	210	5

Project Name: MCGUINNESS BOULEVARD **Lab Number:** L1428173

Project Number: Not Specified **Report Date:** 12/02/14

SAMPLE RESULTS

Lab ID: L1428173-09 D Date Collected: 11/20/14 14:40

Client ID: VHB SB-3 (0-2') Date Received: 11/21/14

Sample Location: 209-235 MCGUINESS BLVD. Field Prep: Not Specified

Parameter	Result	Qualifier	Units	RL	MDL	Dilution Factor

Semivolatile Organics by GC/MS - Westborough Lab

Surrogate	% Recovery	Qualifier	Acceptance Criteria
2-Fluorophenol	47		25-120
Phenol-d6	53		10-120
Nitrobenzene-d5	67		23-120
2-Fluorobiphenyl	60		30-120
2,4,6-Tribromophenol	53		0-136
4-Terphenyl-d14	59		18-120

Project Name: MCGUINNESS BOULEVARD **Lab Number:** L1428173

Project Number: Not Specified **Report Date:** 12/02/14

SAMPLE RESULTS

Lab ID:	L1428173-10 D2	Date Collected:	11/20/14 14:55
Client ID:	VHB SB-3 (14-16')	Date Received:	11/21/14
Sample Location:	209-235 MCGUINESS BLVD.	Field Prep:	Not Specified
Matrix:	Soil	Extraction Method:	EPA 3546
Analytical Method:	1,8270D	Extraction Date:	11/24/14 17:54
Analytical Date:	11/27/14 00:51		
Analyst:	JB		
Percent Solids:	86%		

Parameter	Result	Qualifier	Units	RL	MDL	Dilution Factor
Semivolatile Organics by GC/MS - Westborough Lab						
Fluoranthene	48000		ug/kg	1100	350	10
Benzo(a)anthracene	20000		ug/kg	1100	370	10
Benzo(a)pyrene	16000		ug/kg	1500	470	10
Benzo(b)fluoranthene	15000		ug/kg	1100	380	10
Chrysene	20000		ug/kg	1100	370	10
Phenanthrene	46000		ug/kg	1100	370	10
Pyrene	38000		ug/kg	1100	370	10

Project Name: MCGUINNESS BOULEVARD **Lab Number:** L1428173

Project Number: Not Specified **Report Date:** 12/02/14

SAMPLE RESULTS

Lab ID:	L1428173-10 D	Date Collected:	11/20/14 14:55
Client ID:	VHB SB-3 (14-16')	Date Received:	11/21/14
Sample Location:	209-235 MCGUINESS BLVD.	Field Prep:	Not Specified
Matrix:	Soil	Extraction Method:	EPA 3546
Analytical Method:	1,8270D	Extraction Date:	11/24/14 17:54
Analytical Date:	11/25/14 21:40		
Analyst:	JB		
Percent Solids:	86%		

Parameter	Result	Qualifier	Units	RL	MDL	Dilution Factor
Semivolatile Organics by GC/MS - Westborough Lab						
Acenaphthene	5500		ug/kg	300	79.	2
1,2,4-Trichlorobenzene	ND		ug/kg	380	120	2
Hexachlorobenzene	ND		ug/kg	230	71.	2
Bis(2-chloroethyl)ether	ND		ug/kg	340	110	2
2-Chloronaphthalene	ND		ug/kg	380	120	2
1,2-Dichlorobenzene	ND		ug/kg	380	120	2
1,3-Dichlorobenzene	ND		ug/kg	380	120	2
1,4-Dichlorobenzene	ND		ug/kg	380	120	2
3,3'-Dichlorobenzidine	ND		ug/kg	380	100	2
2,4-Dinitrotoluene	ND		ug/kg	380	82.	2
2,6-Dinitrotoluene	ND		ug/kg	380	98.	2
Fluoranthene	50000	E	ug/kg	230	70.	2
4-Chlorophenyl phenyl ether	ND		ug/kg	380	120	2
4-Bromophenyl phenyl ether	ND		ug/kg	380	88.	2
Bis(2-chloroisopropyl)ether	ND		ug/kg	460	130	2
Bis(2-chloroethoxy)methane	ND		ug/kg	410	120	2
Hexachlorobutadiene	ND		ug/kg	380	110	2
Hexachlorocyclopentadiene	ND		ug/kg	1100	240	2
Hexachloroethane	ND		ug/kg	300	69.	2
Isophorone	ND		ug/kg	340	100	2
Naphthalene	4300		ug/kg	380	130	2
Nitrobenzene	ND		ug/kg	340	91.	2
NitrosoDiPhenylAmine(NDPA)/DPA	ND		ug/kg	300	80.	2
n-Nitrosodi-n-propylamine	ND		ug/kg	380	110	2
Bis(2-Ethylhexyl)phthalate	ND		ug/kg	380	100	2
Butyl benzyl phthalate	ND		ug/kg	380	75.	2
Di-n-butylphthalate	ND		ug/kg	380	74.	2
Di-n-octylphthalate	ND		ug/kg	380	94.	2
Diethyl phthalate	ND		ug/kg	380	81.	2
Dimethyl phthalate	ND		ug/kg	380	97.	2

Project Name: MCGUINNESS BOULEVARD **Lab Number:** L1428173

Project Number: Not Specified **Report Date:** 12/02/14

SAMPLE RESULTS

Lab ID: L1428173-10 D Date Collected: 11/20/14 14:55

Client ID: VHB SB-3 (14-16') Date Received: 11/21/14

Sample Location: 209-235 MCGUINESS BLVD. Field Prep: Not Specified

Parameter	Result	Qualifier	Units	RL	MDL	Dilution Factor
Semivolatile Organics by GC/MS - Westborough Lab						
Benzo(a)anthracene	20000	E	ug/kg	230	75.	2
Benzo(a)pyrene	19000	E	ug/kg	300	93.	2
Benzo(b)fluoranthene	26000	E	ug/kg	230	77.	2
Benzo(k)fluoranthene	14000		ug/kg	230	73.	2
Chrysene	19000	E	ug/kg	230	75.	2
Acenaphthylene	1400		ug/kg	300	71.	2
Anthracene	11000		ug/kg	230	64.	2
Benzo(ghi)perylene	9100		ug/kg	300	79.	2
Fluorene	6000		ug/kg	380	110	2
Phenanthrene	45000	E	ug/kg	230	75.	2
Dibenzo(a,h)anthracene	3900		ug/kg	230	74.	2
Indeno(1,2,3-cd)Pyrene	9800		ug/kg	300	85.	2
Pyrene	40000	E	ug/kg	230	74.	2
Biphenyl	ND		ug/kg	870	120	2
4-Chloroaniline	ND		ug/kg	380	100	2
2-Nitroaniline	ND		ug/kg	380	110	2
3-Nitroaniline	ND		ug/kg	380	100	2
4-Nitroaniline	ND		ug/kg	380	100	2
Dibenzofuran	4500		ug/kg	380	130	2
2-Methylnaphthalene	2000		ug/kg	460	120	2
1,2,4,5-Tetrachlorobenzene	ND		ug/kg	380	120	2
Acetophenone	ND		ug/kg	380	120	2
2,4,6-Trichlorophenol	ND		ug/kg	230	72.	2
P-Chloro-M-Cresol	ND		ug/kg	380	110	2
2-Chlorophenol	ND		ug/kg	380	120	2
2,4-Dichlorophenol	ND		ug/kg	340	120	2
2,4-Dimethylphenol	ND		ug/kg	380	110	2
2-Nitrophenol	ND		ug/kg	820	120	2
4-Nitrophenol	ND		ug/kg	530	120	2
2,4-Dinitrophenol	ND		ug/kg	1800	520	2
4,6-Dinitro-o-cresol	ND		ug/kg	990	140	2
Pentachlorophenol	ND		ug/kg	300	82.	2
Phenol	ND		ug/kg	380	110	2
2-Methylphenol	ND		ug/kg	380	120	2
3-Methylphenol/4-Methylphenol	200	J	ug/kg	550	120	2
2,4,5-Trichlorophenol	ND		ug/kg	380	120	2
Benzoic Acid	ND		ug/kg	1200	390	2
Benzyl Alcohol	ND		ug/kg	380	120	2
Carbazole	7600		ug/kg	380	82.	2

Project Name: MCGUINNESS BOULEVARD **Lab Number:** L1428173

Project Number: Not Specified **Report Date:** 12/02/14

SAMPLE RESULTS

Lab ID: L1428173-10 D Date Collected: 11/20/14 14:55

Client ID: VHB SB-3 (14-16') Date Received: 11/21/14

Sample Location: 209-235 MCGUINESS BLVD. Field Prep: Not Specified

Parameter	Result	Qualifier	Units	RL	MDL	Dilution Factor
Semivolatile Organics by GC/MS - Westborough Lab						

Surrogate	% Recovery	Qualifier	Acceptance Criteria
2-Fluorophenol	63		25-120
Phenol-d6	68		10-120
Nitrobenzene-d5	76		23-120
2-Fluorobiphenyl	59		30-120
2,4,6-Tribromophenol	67		0-136
4-Terphenyl-d14	46		18-120

Project Name: MCGUINNESS BOULEVARD **Lab Number:** L1428173

Project Number: Not Specified **Report Date:** 12/02/14

SAMPLE RESULTS

Lab ID:	L1428173-11	Date Collected:	11/20/14 15:20
Client ID:	VHB SB-2 (0-2')	Date Received:	11/21/14
Sample Location:	209-235 MCGUINESS BLVD.	Field Prep:	Not Specified
Matrix:	Soil	Extraction Method:	EPA 3546
Analytical Method:	1,8270D	Extraction Date:	11/24/14 17:54
Analytical Date:	11/25/14 22:07		
Analyst:	JB		
Percent Solids:	89%		

Parameter	Result	Qualifier	Units	RL	MDL	Dilution Factor
Semivolatile Organics by GC/MS - Westborough Lab						
Acenaphthene	730		ug/kg	150	38.	1
1,2,4-Trichlorobenzene	ND		ug/kg	180	60.	1
Hexachlorobenzene	ND		ug/kg	110	34.	1
Bis(2-chloroethyl)ether	ND		ug/kg	160	51.	1
2-Chloronaphthalene	ND		ug/kg	180	60.	1
1,2-Dichlorobenzene	ND		ug/kg	180	60.	1
1,3-Dichlorobenzene	ND		ug/kg	180	58.	1
1,4-Dichlorobenzene	ND		ug/kg	180	56.	1
3,3'-Dichlorobenzidine	ND		ug/kg	180	49.	1
2,4-Dinitrotoluene	ND		ug/kg	180	40.	1
2,6-Dinitrotoluene	ND		ug/kg	180	47.	1
Fluoranthene	7400	E	ug/kg	110	34.	1
4-Chlorophenyl phenyl ether	ND		ug/kg	180	56.	1
4-Bromophenyl phenyl ether	ND		ug/kg	180	42.	1
Bis(2-chloroisopropyl)ether	ND		ug/kg	220	64.	1
Bis(2-chloroethoxy)methane	ND		ug/kg	200	55.	1
Hexachlorobutadiene	ND		ug/kg	180	52.	1
Hexachlorocyclopentadiene	ND		ug/kg	520	120	1
Hexachloroethane	ND		ug/kg	150	33.	1
Isophorone	ND		ug/kg	160	49.	1
Naphthalene	690		ug/kg	180	61.	1
Nitrobenzene	ND		ug/kg	160	44.	1
NitrosoDiPhenylAmine(NDPA)/DPA	ND		ug/kg	150	38.	1
n-Nitrosodi-n-propylamine	ND		ug/kg	180	54.	1
Bis(2-Ethylhexyl)phthalate	ND		ug/kg	180	48.	1
Butyl benzyl phthalate	96	J	ug/kg	180	36.	1
Di-n-butylphthalate	ND		ug/kg	180	35.	1
Di-n-octylphthalate	ND		ug/kg	180	45.	1
Diethyl phthalate	ND		ug/kg	180	39.	1
Dimethyl phthalate	ND		ug/kg	180	46.	1

Project Name: MCGUINNESS BOULEVARD **Lab Number:** L1428173

Project Number: Not Specified **Report Date:** 12/02/14

SAMPLE RESULTS

Lab ID: L1428173-11 Date Collected: 11/20/14 15:20

Client ID: VHB SB-2 (0-2') Date Received: 11/21/14

Sample Location: 209-235 MCGUINESS BLVD. Field Prep: Not Specified

Parameter	Result	Qualifier	Units	RL	MDL	Dilution Factor
Semivolatile Organics by GC/MS - Westborough Lab						
Benzo(a)anthracene	2900		ug/kg	110	36.	1
Benzo(a)pyrene	2700		ug/kg	150	45.	1
Benzo(b)fluoranthene	3600		ug/kg	110	37.	1
Benzo(k)fluoranthene	1100		ug/kg	110	35.	1
Chrysene	3200		ug/kg	110	36.	1
Acenaphthylene	140	J	ug/kg	150	34.	1
Anthracene	1400		ug/kg	110	30.	1
Benzo(ghi)perylene	1200		ug/kg	150	38.	1
Fluorene	540		ug/kg	180	52.	1
Phenanthrene	6400		ug/kg	110	36.	1
Dibenzo(a,h)anthracene	400		ug/kg	110	35.	1
Indeno(1,2,3-cd)Pyrene	1100		ug/kg	150	41.	1
Pyrene	6400		ug/kg	110	36.	1
Biphenyl	ND		ug/kg	420	60.	1
4-Chloroaniline	ND		ug/kg	180	48.	1
2-Nitroaniline	ND		ug/kg	180	52.	1
3-Nitroaniline	ND		ug/kg	180	50.	1
4-Nitroaniline	ND		ug/kg	180	49.	1
Dibenzofuran	410		ug/kg	180	61.	1
2-Methylnaphthalene	320		ug/kg	220	58.	1
1,2,4,5-Tetrachlorobenzene	ND		ug/kg	180	57.	1
Acetophenone	ND		ug/kg	180	57.	1
2,4,6-Trichlorophenol	ND		ug/kg	110	34.	1
P-Chloro-M-Cresol	ND		ug/kg	180	53.	1
2-Chlorophenol	ND		ug/kg	180	55.	1
2,4-Dichlorophenol	ND		ug/kg	160	59.	1
2,4-Dimethylphenol	ND		ug/kg	180	54.	1
2-Nitrophenol	ND		ug/kg	400	57.	1
4-Nitrophenol	ND		ug/kg	260	59.	1
2,4-Dinitrophenol	ND		ug/kg	880	250	1
4,6-Dinitro-o-cresol	ND		ug/kg	480	67.	1
Pentachlorophenol	ND		ug/kg	150	39.	1
Phenol	ND		ug/kg	180	54.	1
2-Methylphenol	ND		ug/kg	180	59.	1
3-Methylphenol/4-Methylphenol	ND		ug/kg	260	60.	1
2,4,5-Trichlorophenol	ND		ug/kg	180	59.	1
Benzoic Acid	ND		ug/kg	590	180	1
Benzyl Alcohol	ND		ug/kg	180	56.	1
Carbazole	640		ug/kg	180	39.	1

Project Name: MCGUINNESS BOULEVARD **Lab Number:** L1428173

Project Number: Not Specified **Report Date:** 12/02/14

SAMPLE RESULTS

Lab ID: L1428173-11 Date Collected: 11/20/14 15:20

Client ID: VHB SB-2 (0-2') Date Received: 11/21/14

Sample Location: 209-235 MCGUINESS BLVD. Field Prep: Not Specified

Parameter	Result	Qualifier	Units	RL	MDL	Dilution Factor

Semivolatile Organics by GC/MS - Westborough Lab

Surrogate	% Recovery	Qualifier	Acceptance Criteria
2-Fluorophenol	30		25-120
Phenol-d6	44		10-120
Nitrobenzene-d5	57		23-120
2-Fluorobiphenyl	53		30-120
2,4,6-Tribromophenol	22		0-136
4-Terphenyl-d14	42		18-120

Project Name: MCGUINNESS BOULEVARD **Lab Number:** L1428173

Project Number: Not Specified **Report Date:** 12/02/14

SAMPLE RESULTS

Lab ID:	L1428173-11 D	Date Collected:	11/20/14 15:20
Client ID:	VHB SB-2 (0-2')	Date Received:	11/21/14
Sample Location:	209-235 MCGUINESS BLVD.	Field Prep:	Not Specified
Matrix:	Soil	Extraction Method:	EPA 3546
Analytical Method:	1,8270D	Extraction Date:	11/24/14 17:54
Analytical Date:	11/27/14 01:15		
Analyst:	JB		
Percent Solids:	89%		

Parameter	Result	Qualifier	Units	RL	MDL	Dilution Factor
Semivolatile Organics by GC/MS - Westborough Lab						
Fluoranthene	7100		ug/kg	220	67.	2

Project Name: MCGUINNESS BOULEVARD **Lab Number:** L1428173

Project Number: Not Specified **Report Date:** 12/02/14

SAMPLE RESULTS

Lab ID:	L1428173-12	Date Collected:	11/20/14 15:40
Client ID:	VHB SB-2 (14-16')	Date Received:	11/21/14
Sample Location:	209-235 MCGUINESS BLVD.	Field Prep:	Not Specified
Matrix:	Soil	Extraction Method:	EPA 3546
Analytical Method:	1,8270D	Extraction Date:	11/24/14 17:54
Analytical Date:	11/25/14 22:34		
Analyst:	JB		
Percent Solids:	84%		

Parameter	Result	Qualifier	Units	RL	MDL	Dilution Factor
Semivolatile Organics by GC/MS - Westborough Lab						
Acenaphthene	ND		ug/kg	150	40.	1
1,2,4-Trichlorobenzene	ND		ug/kg	190	63.	1
Hexachlorobenzene	ND		ug/kg	120	36.	1
Bis(2-chloroethyl)ether	ND		ug/kg	170	54.	1
2-Chloronaphthalene	ND		ug/kg	190	63.	1
1,2-Dichlorobenzene	ND		ug/kg	190	63.	1
1,3-Dichlorobenzene	ND		ug/kg	190	61.	1
1,4-Dichlorobenzene	ND		ug/kg	190	58.	1
3,3'-Dichlorobenzidine	ND		ug/kg	190	51.	1
2,4-Dinitrotoluene	ND		ug/kg	190	42.	1
2,6-Dinitrotoluene	ND		ug/kg	190	49.	1
Fluoranthene	ND		ug/kg	120	35.	1
4-Chlorophenyl phenyl ether	ND		ug/kg	190	58.	1
4-Bromophenyl phenyl ether	ND		ug/kg	190	44.	1
Bis(2-chloroisopropyl)ether	ND		ug/kg	230	68.	1
Bis(2-chloroethoxy)methane	ND		ug/kg	210	58.	1
Hexachlorobutadiene	ND		ug/kg	190	54.	1
Hexachlorocyclopentadiene	ND		ug/kg	550	120	1
Hexachloroethane	ND		ug/kg	150	35.	1
Isophorone	ND		ug/kg	170	51.	1
Naphthalene	ND		ug/kg	190	64.	1
Nitrobenzene	ND		ug/kg	170	46.	1
NitrosoDiPhenylAmine(NDPA)/DPA	ND		ug/kg	150	40.	1
n-Nitrosodi-n-propylamine	ND		ug/kg	190	57.	1
Bis(2-Ethylhexyl)phthalate	ND		ug/kg	190	50.	1
Butyl benzyl phthalate	ND		ug/kg	190	38.	1
Di-n-butylphthalate	ND		ug/kg	190	37.	1
Di-n-octylphthalate	ND		ug/kg	190	47.	1
Diethyl phthalate	ND		ug/kg	190	41.	1
Dimethyl phthalate	ND		ug/kg	190	49.	1

Project Name: MCGUINNESS BOULEVARD **Lab Number:** L1428173

Project Number: Not Specified **Report Date:** 12/02/14

SAMPLE RESULTS

Lab ID: L1428173-12 Date Collected: 11/20/14 15:40

Client ID: VHB SB-2 (14-16') Date Received: 11/21/14

Sample Location: 209-235 MCGUINESS BLVD. Field Prep: Not Specified

Parameter	Result	Qualifier	Units	RL	MDL	Dilution Factor
Semivolatile Organics by GC/MS - Westborough Lab						
Benzo(a)anthracene	ND		ug/kg	120	38.	1
Benzo(a)pyrene	ND		ug/kg	150	47.	1
Benzo(b)fluoranthene	ND		ug/kg	120	39.	1
Benzo(k)fluoranthene	ND		ug/kg	120	37.	1
Chrysene	ND		ug/kg	120	38.	1
Acenaphthylene	ND		ug/kg	150	36.	1
Anthracene	ND		ug/kg	120	32.	1
Benzo(ghi)perylene	ND		ug/kg	150	40.	1
Fluorene	ND		ug/kg	190	55.	1
Phenanthrene	ND		ug/kg	120	38.	1
Dibenzo(a,h)anthracene	ND		ug/kg	120	37.	1
Indeno(1,2,3-cd)Pyrene	ND		ug/kg	150	43.	1
Pyrene	ND		ug/kg	120	37.	1
Biphenyl	ND		ug/kg	440	63.	1
4-Chloroaniline	ND		ug/kg	190	51.	1
2-Nitroaniline	ND		ug/kg	190	54.	1
3-Nitroaniline	ND		ug/kg	190	53.	1
4-Nitroaniline	ND		ug/kg	190	52.	1
Dibenzofuran	ND		ug/kg	190	64.	1
2-Methylnaphthalene	ND		ug/kg	230	61.	1
1,2,4,5-Tetrachlorobenzene	ND		ug/kg	190	60.	1
Acetophenone	ND		ug/kg	190	60.	1
2,4,6-Trichlorophenol	ND		ug/kg	120	36.	1
P-Chloro-M-Cresol	ND		ug/kg	190	56.	1
2-Chlorophenol	ND		ug/kg	190	58.	1
2,4-Dichlorophenol	ND		ug/kg	170	62.	1
2,4-Dimethylphenol	ND		ug/kg	190	57.	1
2-Nitrophenol	ND		ug/kg	420	60.	1
4-Nitrophenol	ND		ug/kg	270	62.	1
2,4-Dinitrophenol	ND		ug/kg	920	260	1
4,6-Dinitro-o-cresol	ND		ug/kg	500	70.	1
Pentachlorophenol	ND		ug/kg	150	41.	1
Phenol	ND		ug/kg	190	57.	1
2-Methylphenol	ND		ug/kg	190	62.	1
3-Methylphenol/4-Methylphenol	ND		ug/kg	280	63.	1
2,4,5-Trichlorophenol	ND		ug/kg	190	62.	1
Benzoic Acid	ND		ug/kg	620	190	1
Benzyl Alcohol	ND		ug/kg	190	59.	1
Carbazole	ND		ug/kg	190	41.	1

Project Name: MCGUINNESS BOULEVARD **Lab Number:** L1428173

Project Number: Not Specified **Report Date:** 12/02/14

SAMPLE RESULTS

Lab ID: L1428173-12 Date Collected: 11/20/14 15:40

Client ID: VHB SB-2 (14-16') Date Received: 11/21/14

Sample Location: 209-235 MCGUINESS BLVD. Field Prep: Not Specified

Parameter	Result	Qualifier	Units	RL	MDL	Dilution Factor
Semivolatile Organics by GC/MS - Westborough Lab						

Surrogate	% Recovery	Qualifier	Acceptance Criteria
2-Fluorophenol	61		25-120
Phenol-d6	63		10-120
Nitrobenzene-d5	66		23-120
2-Fluorobiphenyl	64		30-120
2,4,6-Tribromophenol	73		0-136
4-Terphenyl-d14	57		18-120

Project Name: MCGUINNESS BOULEVARD
Project Number: Not Specified

Lab Number: L1428173
Report Date: 12/02/14

Method Blank Analysis
Batch Quality Control

Analytical Method: 1,8270D
Analytical Date: 11/26/14 17:14
Analyst: PS

Extraction Method: EPA 3510C
Extraction Date: 11/24/14 16:33

Parameter	Result	Qualifier	Units	RL	MDL
Semivolatile Organics by GC/MS - Westborough Lab for sample(s): 08 Batch: WG743447-1					
Acenaphthene	ND		ug/l	2.0	0.28
1,2,4-Trichlorobenzene	ND		ug/l	5.0	0.21
Hexachlorobenzene	ND		ug/l	2.0	0.40
Bis(2-chloroethyl)ether	ND		ug/l	2.0	0.41
2-Chloronaphthalene	ND		ug/l	2.0	0.46
1,2-Dichlorobenzene	ND		ug/l	2.0	0.30
1,3-Dichlorobenzene	ND		ug/l	2.0	0.35
1,4-Dichlorobenzene	ND		ug/l	2.0	0.32
3,3'-Dichlorobenzidine	ND		ug/l	5.0	0.48
2,4-Dinitrotoluene	ND		ug/l	5.0	1.0
2,6-Dinitrotoluene	ND		ug/l	5.0	0.89
Fluoranthene	ND		ug/l	2.0	0.40
4-Chlorophenyl phenyl ether	ND		ug/l	2.0	0.36
4-Bromophenyl phenyl ether	ND		ug/l	2.0	0.43
Bis(2-chloroisopropyl)ether	ND		ug/l	2.0	0.60
Bis(2-chloroethoxy)methane	ND		ug/l	5.0	0.60
Hexachlorobutadiene	ND		ug/l	2.0	0.42
Hexachlorocyclopentadiene	ND		ug/l	20	0.58
Hexachloroethane	ND		ug/l	2.0	0.30
Isophorone	ND		ug/l	5.0	0.79
Naphthalene	ND		ug/l	2.0	0.33
Nitrobenzene	ND		ug/l	2.0	0.40
NitrosoDiPhenylAmine(NDPA)/DPA	ND		ug/l	2.0	0.34
n-Nitrosodi-n-propylamine	ND		ug/l	5.0	0.64
Bis(2-Ethylhexyl)phthalate	2.3	J	ug/l	3.0	0.93
Butyl benzyl phthalate	ND		ug/l	5.0	1.1
Di-n-butylphthalate	ND		ug/l	5.0	0.77
Di-n-octylphthalate	ND		ug/l	5.0	1.2
Diethyl phthalate	ND		ug/l	5.0	0.39

Project Name: MCGUINNESS BOULEVARD
Project Number: Not Specified

Lab Number: L1428173
Report Date: 12/02/14

Method Blank Analysis
Batch Quality Control

Analytical Method: 1,8270D
Analytical Date: 11/26/14 17:14
Analyst: PS

Extraction Method: EPA 3510C
Extraction Date: 11/24/14 16:33

Parameter	Result	Qualifier	Units	RL	MDL
Semivolatile Organics by GC/MS - Westborough Lab for sample(s): 08 Batch: WG743447-1					
Dimethyl phthalate	ND		ug/l	5.0	0.33
Benzo(a)anthracene	ND		ug/l	2.0	0.32
Benzo(a)pyrene	ND		ug/l	2.0	0.66
Benzo(b)fluoranthene	ND		ug/l	2.0	0.37
Benzo(k)fluoranthene	ND		ug/l	2.0	0.30
Chrysene	ND		ug/l	2.0	0.30
Acenaphthylene	ND		ug/l	2.0	0.37
Anthracene	ND		ug/l	2.0	0.20
Benzo(ghi)perylene	ND		ug/l	2.0	0.57
Fluorene	ND		ug/l	2.0	0.32
Phenanthrene	ND		ug/l	2.0	0.23
Dibenzo(a,h)anthracene	ND		ug/l	2.0	0.44
Indeno(1,2,3-cd)Pyrene	ND		ug/l	2.0	0.43
Pyrene	ND		ug/l	2.0	0.52
Biphenyl	ND		ug/l	2.0	0.24
4-Chloroaniline	ND		ug/l	5.0	0.84
2-Nitroaniline	ND		ug/l	5.0	0.96
3-Nitroaniline	ND		ug/l	5.0	0.67
4-Nitroaniline	ND		ug/l	5.0	0.83
Dibenzofuran	ND		ug/l	2.0	0.22
2-Methylnaphthalene	ND		ug/l	2.0	0.36
1,2,4,5-Tetrachlorobenzene	ND		ug/l	10	0.36
Acetophenone	ND		ug/l	5.0	0.43
2,4,6-Trichlorophenol	ND		ug/l	5.0	0.78
P-Chloro-M-Cresol	ND		ug/l	2.0	0.54
2-Chlorophenol	ND		ug/l	2.0	0.58
2,4-Dichlorophenol	ND		ug/l	5.0	0.56
2,4-Dimethylphenol	ND		ug/l	5.0	0.58
2-Nitrophenol	ND		ug/l	10	1.0

Project Name: MCGUINNESS BOULEVARD
Project Number: Not Specified

Lab Number: L1428173
Report Date: 12/02/14

Method Blank Analysis
Batch Quality Control

Analytical Method: 1,8270D
Analytical Date: 11/26/14 17:14
Analyst: PS

Extraction Method: EPA 3510C
Extraction Date: 11/24/14 16:33

Parameter	Result	Qualifier	Units	RL	MDL
Semivolatile Organics by GC/MS - Westborough Lab for sample(s): 08 Batch: WG743447-1					
4-Nitrophenol	ND		ug/l	10	1.1
2,4-Dinitrophenol	ND		ug/l	20	1.4
4,6-Dinitro-o-cresol	ND		ug/l	10	1.4
Pentachlorophenol	ND		ug/l	10	3.2
Phenol	ND		ug/l	5.0	0.27
2-Methylphenol	ND		ug/l	5.0	0.70
3-Methylphenol/4-Methylphenol	ND		ug/l	5.0	0.72
2,4,5-Trichlorophenol	ND		ug/l	5.0	0.75
Benzoic Acid	ND		ug/l	50	1.0
Benzyl Alcohol	ND		ug/l	2.0	0.68
Carbazole	ND		ug/l	2.0	0.37

Surrogate	%Recovery	Qualifier	Acceptance Criteria
2-Fluorophenol	36		21-120
Phenol-d6	26		10-120
Nitrobenzene-d5	67		23-120
2-Fluorobiphenyl	79		15-120
2,4,6-Tribromophenol	95		10-120
4-Terphenyl-d14	113		41-149

Project Name: MCGUINNESS BOULEVARD
Project Number: Not Specified

Lab Number: L1428173
Report Date: 12/02/14

Method Blank Analysis
Batch Quality Control

Analytical Method: 1,8270D-SIM
Analytical Date: 11/30/14 04:06
Analyst: MW

Extraction Method: EPA 3510C
Extraction Date: 11/24/14 16:37

Parameter	Result	Qualifier	Units	RL	MDL
Semivolatile Organics by GC/MS-SIM - Westborough Lab for sample(s): 08 Batch: WG743449-1					
Acenaphthene	ND		ug/l	0.20	0.06
2-Chloronaphthalene	ND		ug/l	0.20	0.07
Fluoranthene	ND		ug/l	0.20	0.04
Hexachlorobutadiene	ND		ug/l	0.50	0.07
Naphthalene	ND		ug/l	0.20	0.06
Benzo(a)anthracene	ND		ug/l	0.20	0.06
Benzo(a)pyrene	ND		ug/l	0.20	0.07
Benzo(b)fluoranthene	ND		ug/l	0.20	0.07
Benzo(k)fluoranthene	ND		ug/l	0.20	0.07
Chrysene	ND		ug/l	0.20	0.05
Acenaphthylene	ND		ug/l	0.20	0.05
Anthracene	ND		ug/l	0.20	0.06
Benzo(ghi)perylene	ND		ug/l	0.20	0.07
Fluorene	ND		ug/l	0.20	0.06
Phenanthrene	ND		ug/l	0.20	0.06
Dibenzo(a,h)anthracene	ND		ug/l	0.20	0.07
Indeno(1,2,3-cd)Pyrene	ND		ug/l	0.20	0.08
Pyrene	ND		ug/l	0.20	0.06
2-Methylnaphthalene	ND		ug/l	0.20	0.06
Pentachlorophenol	ND		ug/l	0.80	0.19
Hexachlorobenzene	ND		ug/l	0.80	0.01
Hexachloroethane	ND		ug/l	0.80	0.07

Project Name: MCGUINNESS BOULEVARD
Project Number: Not Specified

Lab Number: L1428173
Report Date: 12/02/14

Method Blank Analysis
Batch Quality Control

Analytical Method: 1,8270D-SIM
Analytical Date: 11/30/14 04:06
Analyst: MW

Extraction Method: EPA 3510C
Extraction Date: 11/24/14 16:37

Parameter	Result	Qualifier	Units	RL	MDL
Semivolatile Organics by GC/MS-SIM - Westborough Lab for sample(s): 08 Batch: WG743449-1					

Surrogate	%Recovery	Qualifier	Acceptance Criteria
2-Fluorophenol	37		21-120
Phenol-d6	26		10-120
Nitrobenzene-d5	72		23-120
2-Fluorobiphenyl	86		15-120
2,4,6-Tribromophenol	**135**	Q	10-120
4-Terphenyl-d14	95		41-149

Project Name: MCGUINNESS BOULEVARD **Lab Number:** L1428173

Project Number: Not Specified **Report Date:** 12/02/14

Method Blank Analysis
Batch Quality Control

Analytical Method: 1,8270D
Analytical Date: 11/25/14 16:42
Analyst: JB

Extraction Method: EPA 3546
Extraction Date: 11/24/14 17:54

Parameter	Result	Qualifier	Units	RL	MDL
Semivolatile Organics by GC/MS - Westborough Lab for sample(s): 01-05,07,09-12 Batch: WG743474-1					
Acenaphthene	ND		ug/kg	130	34.
1,2,4-Trichlorobenzene	ND		ug/kg	160	54.
Hexachlorobenzene	ND		ug/kg	98	30.
Bis(2-chloroethyl)ether	ND		ug/kg	150	46.
2-Chloronaphthalene	ND		ug/kg	160	53.
1,2-Dichlorobenzene	ND		ug/kg	160	54.
1,3-Dichlorobenzene	ND		ug/kg	160	52.
1,4-Dichlorobenzene	ND		ug/kg	160	50.
3,3'-Dichlorobenzidine	ND		ug/kg	160	43.
2,4-Dinitrotoluene	ND		ug/kg	160	35.
2,6-Dinitrotoluene	ND		ug/kg	160	42.
Fluoranthene	ND		ug/kg	98	30.
4-Chlorophenyl phenyl ether	ND		ug/kg	160	50.
4-Bromophenyl phenyl ether	ND		ug/kg	160	38.
Bis(2-chloroisopropyl)ether	ND		ug/kg	200	58.
Bis(2-chloroethoxy)methane	ND		ug/kg	180	50.
Hexachlorobutadiene	ND		ug/kg	160	46.
Hexachlorocyclopentadiene	ND		ug/kg	470	100
Hexachloroethane	ND		ug/kg	130	30.
Isophorone	ND		ug/kg	150	43.
Naphthalene	ND		ug/kg	160	54.
Nitrobenzene	ND		ug/kg	150	39.
NitrosoDiPhenylAmine(NDPA)/DPA	ND		ug/kg	130	34.
n-Nitrosodi-n-propylamine	ND		ug/kg	160	49.
Bis(2-Ethylhexyl)phthalate	ND		ug/kg	160	43.
Butyl benzyl phthalate	ND		ug/kg	160	32.
Di-n-butylphthalate	ND		ug/kg	160	32.
Di-n-octylphthalate	ND		ug/kg	160	40.
Diethyl phthalate	ND		ug/kg	160	34.

Project Name: MCGUINNESS BOULEVARD **Lab Number:** L1428173

Project Number: Not Specified **Report Date:** 12/02/14

Method Blank Analysis
Batch Quality Control

Analytical Method: 1,8270D
Analytical Date: 11/25/14 16:42
Analyst: JB

Extraction Method: EPA 3546
Extraction Date: 11/24/14 17:54

Parameter	Result	Qualifier	Units	RL	MDL
Semivolatile Organics by GC/MS - Westborough Lab for sample(s): 01-05,07,09-12 Batch: WG743474-1					
Dimethyl phthalate	ND		ug/kg	160	42.
Benzo(a)anthracene	ND		ug/kg	98	32.
Benzo(a)pyrene	ND		ug/kg	130	40.
Benzo(b)fluoranthene	ND		ug/kg	98	33.
Benzo(k)fluoranthene	ND		ug/kg	98	31.
Chrysene	ND		ug/kg	98	32.
Acenaphthylene	ND		ug/kg	130	30.
Anthracene	ND		ug/kg	98	27.
Benzo(ghi)perylene	ND		ug/kg	130	34.
Fluorene	ND		ug/kg	160	47.
Phenanthrene	ND		ug/kg	98	32.
Dibenzo(a,h)anthracene	ND		ug/kg	98	32.
Indeno(1,2,3-cd)Pyrene	ND		ug/kg	130	36.
Pyrene	ND		ug/kg	98	32.
Biphenyl	ND		ug/kg	370	54.
4-Chloroaniline	ND		ug/kg	160	43.
2-Nitroaniline	ND		ug/kg	160	46.
3-Nitroaniline	ND		ug/kg	160	45.
4-Nitroaniline	ND		ug/kg	160	44.
Dibenzofuran	ND		ug/kg	160	54.
2-Methylnaphthalene	ND		ug/kg	200	52.
1,2,4,5-Tetrachlorobenzene	ND		ug/kg	160	51.
Acetophenone	ND		ug/kg	160	51.
2,4,6-Trichlorophenol	ND		ug/kg	98	31.
P-Chloro-M-Cresol	ND		ug/kg	160	47.
2-Chlorophenol	ND		ug/kg	160	49.
2,4-Dichlorophenol	ND		ug/kg	150	53.
2,4-Dimethylphenol	ND		ug/kg	160	49.
2-Nitrophenol	ND		ug/kg	350	51.

Project Name: MCGUINNESS BOULEVARD
Project Number: Not Specified

Lab Number: L1428173
Report Date: 12/02/14

Method Blank Analysis
Batch Quality Control

Analytical Method: 1,8270D
Analytical Date: 11/25/14 16:42
Analyst: JB

Extraction Method: EPA 3546
Extraction Date: 11/24/14 17:54

Parameter	Result	Qualifier	Units	RL	MDL
Semivolatile Organics by GC/MS - Westborough Lab for sample(s): 01-05,07,09-12 Batch: WG743474-1					
4-Nitrophenol	ND		ug/kg	230	53.
2,4-Dinitrophenol	ND		ug/kg	780	220
4,6-Dinitro-o-cresol	ND		ug/kg	420	60.
Pentachlorophenol	ND		ug/kg	130	35.
Phenol	ND		ug/kg	160	48.
2-Methylphenol	ND		ug/kg	160	53.
3-Methylphenol/4-Methylphenol	ND		ug/kg	240	54.
2,4,5-Trichlorophenol	ND		ug/kg	160	53.
Benzoic Acid	ND		ug/kg	530	160
Benzyl Alcohol	ND		ug/kg	160	50.
Carbazole	ND		ug/kg	160	35.

Tentatively Identified Compounds

No Tentatively Identified Compounds	ND	ug/kg

Surrogate	%Recovery	Qualifier	Acceptance Criteria
2-Fluorophenol	55		25-120
Phenol-d6	63		10-120
Nitrobenzene-d5	61		23-120
2-Fluorobiphenyl	63		30-120
2,4,6-Tribromophenol	86		0-136
4-Terphenyl-d14	92		18-120

Project Name: MCGUINNESS BOULEVARD
Project Number: Not Specified

Lab Number: L1428173
Report Date: 12/02/14

Method Blank Analysis
Batch Quality Control

Analytical Method: 1,8270D
Analytical Date: 11/26/14 16:40
Analyst: PS

Extraction Method: EPA 3546
Extraction Date: 11/26/14 10:28

Parameter	Result	Qualifier	Units	RL	MDL
Semivolatile Organics by GC/MS - Westborough Lab for sample(s): 06 Batch: WG744091-1					
Acenaphthene	ND		ug/kg	130	33.
1,2,4-Trichlorobenzene	ND		ug/kg	160	53.
Hexachlorobenzene	ND		ug/kg	97	30.
Bis(2-chloroethyl)ether	ND		ug/kg	150	46.
2-Chloronaphthalene	ND		ug/kg	160	53.
1,2-Dichlorobenzene	ND		ug/kg	160	53.
1,3-Dichlorobenzene	ND		ug/kg	160	51.
1,4-Dichlorobenzene	ND		ug/kg	160	49.
3,3'-Dichlorobenzidine	ND		ug/kg	160	43.
2,4-Dinitrotoluene	ND		ug/kg	160	35.
2,6-Dinitrotoluene	ND		ug/kg	160	42.
Fluoranthene	ND		ug/kg	97	30.
4-Chlorophenyl phenyl ether	ND		ug/kg	160	49.
4-Bromophenyl phenyl ether	ND		ug/kg	160	37.
Bis(2-chloroisopropyl)ether	ND		ug/kg	190	57.
Bis(2-chloroethoxy)methane	ND		ug/kg	180	49.
Hexachlorobutadiene	ND		ug/kg	160	46.
Hexachlorocyclopentadiene	ND		ug/kg	460	100
Hexachloroethane	ND		ug/kg	130	30.
Isophorone	ND		ug/kg	150	43.
Naphthalene	ND		ug/kg	160	54.
Nitrobenzene	ND		ug/kg	150	39.
NitrosoDiPhenylAmine(NDPA)/DPA	ND		ug/kg	130	34.
n-Nitrosodi-n-propylamine	ND		ug/kg	160	48.
Bis(2-Ethylhexyl)phthalate	ND		ug/kg	160	42.
Butyl benzyl phthalate	ND		ug/kg	160	32.
Di-n-butylphthalate	ND		ug/kg	160	31.
Di-n-octylphthalate	ND		ug/kg	160	40.
Diethyl phthalate	ND		ug/kg	160	34.

Project Name: MCGUINNESS BOULEVARD
Project Number: Not Specified

Lab Number: L1428173
Report Date: 12/02/14

Method Blank Analysis
Batch Quality Control

Analytical Method: 1,8270D
Analytical Date: 11/26/14 16:40
Analyst: PS

Extraction Method: EPA 3546
Extraction Date: 11/26/14 10:28

Parameter	Result	Qualifier	Units	RL	MDL
Semivolatile Organics by GC/MS - Westborough Lab for sample(s): 06 Batch: WG744091-1					
Dimethyl phthalate	ND		ug/kg	160	41.
Benzo(a)anthracene	ND		ug/kg	97	32.
Benzo(a)pyrene	ND		ug/kg	130	40.
Benzo(b)fluoranthene	ND		ug/kg	97	33.
Benzo(k)fluoranthene	ND		ug/kg	97	31.
Chrysene	ND		ug/kg	97	32.
Acenaphthylene	ND		ug/kg	130	30.
Anthracene	ND		ug/kg	97	27.
Benzo(ghi)perylene	ND		ug/kg	130	34.
Fluorene	ND		ug/kg	160	46.
Phenanthrene	ND		ug/kg	97	32.
Dibenzo(a,h)anthracene	ND		ug/kg	97	31.
Indeno(1,2,3-cd)Pyrene	ND		ug/kg	130	36.
Pyrene	ND		ug/kg	97	32.
Biphenyl	ND		ug/kg	370	54.
4-Chloroaniline	ND		ug/kg	160	43.
2-Nitroaniline	ND		ug/kg	160	46.
3-Nitroaniline	ND		ug/kg	160	45.
4-Nitroaniline	ND		ug/kg	160	44.
Dibenzofuran	ND		ug/kg	160	54.
2-Methylnaphthalene	ND		ug/kg	190	52.
1,2,4,5-Tetrachlorobenzene	ND		ug/kg	160	50.
Acetophenone	ND		ug/kg	160	50.
2,4,6-Trichlorophenol	ND		ug/kg	97	31.
P-Chloro-M-Cresol	ND		ug/kg	160	47.
2-Chlorophenol	ND		ug/kg	160	49.
2,4-Dichlorophenol	ND		ug/kg	150	52.
2,4-Dimethylphenol	ND		ug/kg	160	48.
2-Nitrophenol	ND		ug/kg	350	51.

Project Name: MCGUINNESS BOULEVARD
Project Number: Not Specified

Lab Number: L1428173
Report Date: 12/02/14

Method Blank Analysis
Batch Quality Control

Analytical Method: 1,8270D
Analytical Date: 11/26/14 16:40
Analyst: PS

Extraction Method: EPA 3546
Extraction Date: 11/26/14 10:28

Parameter	Result	Qualifier	Units	RL	MDL
Semivolatile Organics by GC/MS - Westborough Lab for sample(s): 06 Batch: WG744091-1					
4-Nitrophenol	ND		ug/kg	230	52.
2,4-Dinitrophenol	ND		ug/kg	780	220
4,6-Dinitro-o-cresol	ND		ug/kg	420	59.
Pentachlorophenol	ND		ug/kg	130	35.
Phenol	ND		ug/kg	160	48.
2-Methylphenol	ND		ug/kg	160	52.
3-Methylphenol/4-Methylphenol	ND		ug/kg	230	53.
2,4,5-Trichlorophenol	ND		ug/kg	160	52.
Benzoic Acid	ND		ug/kg	520	160
Benzyl Alcohol	ND		ug/kg	160	50.
Carbazole	ND		ug/kg	160	35.

Surrogate	%Recovery	Qualifier	Acceptance Criteria
2-Fluorophenol	57		25-120
Phenol-d6	61		10-120
Nitrobenzene-d5	62		23-120
2-Fluorobiphenyl	56		30-120
2,4,6-Tribromophenol	66		0-136
4-Terphenyl-d14	75		18-120

Lab Control Sample Analysis
Batch Quality Control

Project Name: MCGUINNESS BOULEVARD
Project Number: Not Specified

Lab Number: L1428173
Report Date: 12/02/14

Parameter	LCS %Recovery	Qual	LCSD %Recovery	Qual	%Recovery Limits	RPD	Qual	RPD Limits
Semivolatile Organics by GC/MS - Westborough Lab Associated sample(s): 08 Batch: WG743447-2 WG743447-3								
Acenaphthene	68		66		37-111	3		30
1,2,4-Trichlorobenzene	47		44		39-98	7		30
Hexachlorobenzene	87		87		40-140	0		30
Bis(2-chloroethyl)ether	55		49		40-140	12		30
2-Chloronaphthalene	68		64		40-140	6		30
1,2-Dichlorobenzene	41		**39**	Q	40-140	5		30
1,3-Dichlorobenzene	**38**	Q	**36**	Q	40-140	5		30
1,4-Dichlorobenzene	37		36		36-97	3		30
3,3'-Dichlorobenzidine	86		86		40-140	0		30
2,4-Dinitrotoluene	90		89		24-96	1		30
2,6-Dinitrotoluene	91		90		40-140	1		30
Fluoranthene	92		92		40-140	0		30
4-Chlorophenyl phenyl ether	81		80		40-140	1		30
4-Bromophenyl phenyl ether	88		87		40-140	1		30
Bis(2-chloroisopropyl)ether	49		44		40-140	11		30
Bis(2-chloroethoxy)methane	67		65		40-140	3		30
Hexachlorobutadiene	42		40		40-140	5		30
Hexachlorocyclopentadiene	**38**	Q	**37**	Q	40-140	3		30
Hexachloroethane	**34**	Q	**32**	Q	40-140	6		30
Isophorone	73		70		40-140	4		30
Naphthalene	50		48		40-140	4		30

Lab Control Sample Analysis
Batch Quality Control

Project Name: MCGUINNESS BOULEVARD
Project Number: Not Specified

Lab Number: L1428173
Report Date: 12/02/14

Parameter	LCS %Recovery	Qual	LCSD %Recovery	Qual	%Recovery Limits	RPD	Qual	RPD Limits
Semivolatile Organics by GC/MS - Westborough Lab Associated sample(s): 08 Batch: WG743447-2 WG743447-3								
Nitrobenzene	60		54		40-140	11		30
NitrosoDiPhenylAmine(NDPA)/DPA	87		85		40-140	2		30
n-Nitrosodi-n-propylamine	69		65		29-132	6		30
Bis(2-Ethylhexyl)phthalate	101		100		40-140	1		30
Butyl benzyl phthalate	92		92		40-140	0		30
Di-n-butylphthalate	94		95		40-140	1		30
Di-n-octylphthalate	96		97		40-140	1		30
Diethyl phthalate	92		91		40-140	1		30
Dimethyl phthalate	89		87		40-140	2		30
Benzo(a)anthracene	86		87		40-140	1		30
Benzo(a)pyrene	87		87		40-140	0		30
Benzo(b)fluoranthene	89		86		40-140	3		30
Benzo(k)fluoranthene	92		94		40-140	2		30
Chrysene	86		86		40-140	0		30
Acenaphthylene	75		72		45-123	4		30
Anthracene	83		83		40-140	0		30
Benzo(ghi)perylene	86		85		40-140	1		30
Fluorene	80		79		40-140	1		30
Phenanthrene	85		85		40-140	0		30
Dibenzo(a,h)anthracene	89		88		40-140	1		30
Indeno(1,2,3-cd)Pyrene	87		87		40-140	0		30

Lab Control Sample Analysis
Batch Quality Control

Project Name: MCGUINNESS BOULEVARD
Project Number: Not Specified

Lab Number: L1428173
Report Date: 12/02/14

Parameter	LCS %Recovery	Qual	LCSD %Recovery	Qual	%Recovery Limits	RPD	Qual	RPD Limits
Semivolatile Organics by GC/MS - Westborough Lab Associated sample(s): 08 Batch: WG743447-2 WG743447-3								
Pyrene	91		92		26-127	1		30
Biphenyl	61		59			3		30
4-Chloroaniline	78		77		40-140	1		30
2-Nitroaniline	95		93		52-143	2		30
3-Nitroaniline	75		76		25-145	1		30
4-Nitroaniline	88		86		51-143	2		30
Dibenzofuran	80		79		40-140	1		30
2-Methylnaphthalene	60		58		40-140	3		30
1,2,4,5-Tetrachlorobenzene	53		50		2-134	6		30
Acetophenone	68		64		39-129	6		30
2,4,6-Trichlorophenol	97		93		30-130	4		30
P-Chloro-M-Cresol	90		89		23-97	1		30
2-Chlorophenol	61		56		27-123	9		30
2,4-Dichlorophenol	83		74		30-130	11		30
2,4-Dimethylphenol	55		53		30-130	4		30
2-Nitrophenol	71		65		30-130	9		30
4-Nitrophenol	47		49		10-80	4		30
2,4-Dinitrophenol	82		83		20-130	1		30
4,6-Dinitro-o-cresol	94		94		20-164	0		30
Pentachlorophenol	78		76		9-103	3		30
Phenol	32		30		12-110	6		30

Lab Control Sample Analysis
Batch Quality Control

Project Name: MCGUINNESS BOULEVARD
Project Number: Not Specified
Lab Number: L1428173
Report Date: 12/02/14

Parameter	LCS %Recovery	Qual	LCSD %Recovery	Qual	%Recovery Limits	RPD	Qual	RPD Limits
Semivolatile Organics by GC/MS - Westborough Lab Associated sample(s): 08 Batch: WG743447-2 WG743447-3								
2-Methylphenol	60		56		30-130	7		30
3-Methylphenol/4-Methylphenol	64		62		30-130	3		30
2,4,5-Trichlorophenol	103		97		30-130	6		30
Benzoic Acid	30		24			22		30
Benzyl Alcohol	62		58			7		30
Carbazole	93		95		55-144	2		30

Surrogate	LCS %Recovery	Qual	LCSD %Recovery	Qual	Acceptance Criteria
2-Fluorophenol	36		33		21-120
Phenol-d6	28		26		10-120
Nitrobenzene-d5	66		61		23-120
2-Fluorobiphenyl	79		74		15-120
2,4,6-Tribromophenol	89		88		10-120
4-Terphenyl-d14	98		96		41-149

Lab Control Sample Analysis
Batch Quality Control

Project Name: MCGUINNESS BOULEVARD
Project Number: Not Specified

Lab Number: L1428173
Report Date: 12/02/14

Parameter	LCS %Recovery	Qual	LCSD %Recovery	Qual	%Recovery Limits	RPD	Qual	RPD Limits
Semivolatile Organics by GC/MS-SIM - Westborough Lab Associated sample(s): 08 Batch: WG743449-2 WG743449-3								
Acenaphthene	67		72		37-111	7		40
2-Chloronaphthalene	73		76		40-140	4		40
Fluoranthene	85		91		40-140	7		40
Hexachlorobutadiene	62		64		40-140	3		40
Naphthalene	54		57		40-140	5		40
Benzo(a)anthracene	88		94		40-140	7		40
Benzo(a)pyrene	87		91		40-140	4		40
Benzo(b)fluoranthene	86		92		40-140	7		40
Benzo(k)fluoranthene	86		90		40-140	5		40
Chrysene	81		86		40-140	6		40
Acenaphthylene	72		74		40-140	3		40
Anthracene	74		79		40-140	7		40
Benzo(ghi)perylene	98		104		40-140	6		40
Fluorene	75		80		40-140	6		40
Phenanthrene	75		81		40-140	8		40
Dibenzo(a,h)anthracene	100		106		40-140	6		40
Indeno(1,2,3-cd)Pyrene	102		107		40-140	5		40
Pyrene	84		89		26-127	6		40
2-Methylnaphthalene	68		70		40-140	3		40
Pentachlorophenol	78		85		9-103	9		40
Hexachlorobenzene	88		95		40-140	8		40

Lab Control Sample Analysis
Batch Quality Control

Project Name: MCGUINNESS BOULEVARD
Project Number: Not Specified
Lab Number: L1428173
Report Date: 12/02/14

Parameter	LCS %Recovery	Qual	LCSD %Recovery	Qual	%Recovery Limits	RPD	Qual	RPD Limits
Semivolatile Organics by GC/MS-SIM - Westborough Lab Associated sample(s): 08 Batch: WG743449-2 WG743449-3								
Hexachloroethane	42		44		40-140	5		40

Surrogate	LCS %Recovery	Qual	LCSD %Recovery	Qual	Acceptance Criteria
2-Fluorophenol	32		35		21-120
Phenol-d6	24		26		10-120
Nitrobenzene-d5	61		64		23-120
2-Fluorobiphenyl	79		82		15-120
2,4,6-Tribromophenol	118		**124**	Q	10-120
4-Terphenyl-d14	81		86		41-149

Lab Control Sample Analysis
Batch Quality Control

Project Name: MCGUINNESS BOULEVARD
Project Number: Not Specified

Lab Number: L1428173
Report Date: 12/02/14

Parameter	LCS %Recovery	Qual	LCSD %Recovery	Qual	%Recovery Limits	RPD	Qual	RPD Limits
Semivolatile Organics by GC/MS - Westborough Lab Associated sample(s): 01-05,07,09-12 Batch: WG743474-2 WG743474-3								
Acenaphthene	70		74		31-137	6		50
1,2,4-Trichlorobenzene	73		76		38-107	4		50
Hexachlorobenzene	67		70		40-140	4		50
Bis(2-chloroethyl)ether	67		70		40-140	4		50
2-Chloronaphthalene	72		74		40-140	3		50
1,2-Dichlorobenzene	69		73		40-140	6		50
1,3-Dichlorobenzene	67		72		40-140	7		50
1,4-Dichlorobenzene	68		71		28-104	4		50
3,3'-Dichlorobenzidine	65		65		40-140	0		50
2,4-Dinitrotoluene	70		74		28-89	6		50
2,6-Dinitrotoluene	68		68		40-140	0		50
Fluoranthene	69		72		40-140	4		50
4-Chlorophenyl phenyl ether	70		74		40-140	6		50
4-Bromophenyl phenyl ether	67		72		40-140	7		50
Bis(2-chloroisopropyl)ether	71		74		40-140	4		50
Bis(2-chloroethoxy)methane	67		71		40-117	6		50
Hexachlorobutadiene	70		76		40-140	8		50
Hexachlorocyclopentadiene	69		74		40-140	7		50
Hexachloroethane	68		72		40-140	6		50
Isophorone	70		73		40-140	4		50
Naphthalene	68		72		40-140	6		50

Lab Control Sample Analysis
Batch Quality Control

Project Name: MCGUINNESS BOULEVARD
Project Number: Not Specified

Lab Number: L1428173
Report Date: 12/02/14

Parameter	LCS %Recovery	Qual	LCSD %Recovery	Qual	%Recovery Limits	RPD	Qual	RPD Limits
Semivolatile Organics by GC/MS - Westborough Lab Associated sample(s): 01-05,07,09-12 Batch: WG743474-2 WG743474-3								
Nitrobenzene	72		76		40-140	5		50
NitrosoDiPhenylAmine(NDPA)/DPA	73		77			5		50
n-Nitrosodi-n-propylamine	75		78		32-121	4		50
Bis(2-Ethylhexyl)phthalate	81		84		40-140	4		50
Butyl benzyl phthalate	70		71		40-140	1		50
Di-n-butylphthalate	76		78		40-140	3		50
Di-n-octylphthalate	79		81		40-140	3		50
Diethyl phthalate	71		74		40-140	4		50
Dimethyl phthalate	70		75		40-140	7		50
Benzo(a)anthracene	73		75		40-140	3		50
Benzo(a)pyrene	76		78		40-140	3		50
Benzo(b)fluoranthene	78		72		40-140	8		50
Benzo(k)fluoranthene	73		84		40-140	14		50
Chrysene	72		75		40-140	4		50
Acenaphthylene	70		73		40-140	4		50
Anthracene	73		76		40-140	4		50
Benzo(ghi)perylene	64		67		40-140	5		50
Fluorene	70		74		40-140	6		50
Phenanthrene	72		77		40-140	7		50
Dibenzo(a,h)anthracene	67		70		40-140	4		50
Indeno(1,2,3-cd)Pyrene	68		71		40-140	4		50

Lab Control Sample Analysis
Batch Quality Control

Project Name: MCGUINNESS BOULEVARD
Project Number: Not Specified

Lab Number: L1428173
Report Date: 12/02/14

Parameter	LCS %Recovery	Qual	LCSD %Recovery	Qual	%Recovery Limits	RPD	Qual	RPD Limits
Semivolatile Organics by GC/MS - Westborough Lab Associated sample(s): 01-05,07,09-12 Batch: WG743474-2 WG743474-3								
Pyrene	68		70		35-142	3		50
Biphenyl	76		82			8		50
4-Chloroaniline	73		70		40-140	4		50
2-Nitroaniline	74		75		47-134	1		50
3-Nitroaniline	59		59		26-129	0		50
4-Nitroaniline	68		69		41-125	1		50
Dibenzofuran	74		78		40-140	5		50
2-Methylnaphthalene	75		80		40-140	6		50
1,2,4,5-Tetrachlorobenzene	75		81		40-117	8		50
Acetophenone	77		79		14-144	3		50
2,4,6-Trichlorophenol	80		82		30-130	2		50
P-Chloro-M-Cresol	80		82		26-103	2		50
2-Chlorophenol	75		78		25-102	4		50
2,4-Dichlorophenol	80		83		30-130	4		50
2,4-Dimethylphenol	83		87		30-130	5		50
2-Nitrophenol	77		82		30-130	6		50
4-Nitrophenol	89		92		11-114	3		50
2,4-Dinitrophenol	49		50		4-130	2		50
4,6-Dinitro-o-cresol	66		67		10-130	2		50
Pentachlorophenol	61		64		17-109	5		50
Phenol	73		78		26-90	7		50

Lab Control Sample Analysis
Batch Quality Control

Project Name: MCGUINNESS BOULEVARD
Project Number: Not Specified
Lab Number: L1428173
Report Date: 12/02/14

Parameter	LCS %Recovery	Qual	LCSD %Recovery	Qual	%Recovery Limits	RPD	Qual	RPD Limits
Semivolatile Organics by GC/MS - Westborough Lab Associated sample(s): 01-05,07,09-12 Batch: WG743474-2 WG743474-3								
2-Methylphenol	74		78		30-130.	5		50
3-Methylphenol/4-Methylphenol	74		78		30-130	5		50
2,4,5-Trichlorophenol	80		81		30-130	1		50
Benzoic Acid	20		18			11		50
Benzyl Alcohol	83		86		40-140	4		50
Carbazole	75		78		54-128	4		50

Surrogate	LCS %Recovery	Qual	LCSD %Recovery	Qual	Acceptance Criteria
2-Fluorophenol	72		74		25-120
Phenol-d6	74		78		10-120
Nitrobenzene-d5	78		80		23-120
2-Fluorobiphenyl	75		78		30-120
2,4,6-Tribromophenol	81		83		0-136
4-Terphenyl-d14	72		74		18-120

Lab Control Sample Analysis
Batch Quality Control

Project Name: MCGUINNESS BOULEVARD
Project Number: Not Specified

Lab Number: L1428173
Report Date: 12/02/14

Parameter	LCS %Recovery	Qual	LCSD %Recovery	Qual	%Recovery Limits	RPD	Qual	RPD Limits
Semivolatile Organics by GC/MS - Westborough Lab Associated sample(s): 06 Batch: WG744091-2 WG744091-3								
Acenaphthene	59		67		31-137	13		50
1,2,4-Trichlorobenzene	57		60		38-107	5		50
Hexachlorobenzene	67		77		40-140	14		50
Bis(2-chloroethyl)ether	50		53		40-140	6		50
2-Chloronaphthalene	60		68		40-140	13		50
1,2-Dichlorobenzene	52		56		40-140	7		50
1,3-Dichlorobenzene	51		55		40-140	8		50
1,4-Dichlorobenzene	51		55		28-104	8		50
3,3'-Dichlorobenzidine	64		74		40-140	14		50
2,4-Dinitrotoluene	79		**91**	Q	28-89	14		50
2,6-Dinitrotoluene	77		87		40-140	12		50
Fluoranthene	69		81		40-140	16		50
4-Chlorophenyl phenyl ether	64		72		40-140	12		50
4-Bromophenyl phenyl ether	66		77		40-140	15		50
Bis(2-chloroisopropyl)ether	48		52		40-140	8		50
Bis(2-chloroethoxy)methane	55		60		40-117	9		50
Hexachlorobutadiene	56		58		40-140	4		50
Hexachlorocyclopentadiene	59		64		40-140	8		50
Hexachloroethane	50		55		40-140	10		50
Isophorone	57		64		40-140	12		50
Naphthalene	53		55		40-140	4		50

Lab Control Sample Analysis
Batch Quality Control

Project Name: MCGUINNESS BOULEVARD
Project Number: Not Specified

Lab Number: L1428173
Report Date: 12/02/14

Parameter	LCS %Recovery	Qual	LCSD %Recovery	Qual	%Recovery Limits	RPD	Qual	RPD Limits
Semivolatile Organics by GC/MS - Westborough Lab Associated sample(s): 06 Batch: WG744091-2 WG744091-3								
Nitrobenzene	64		68		40-140	6		50
NitrosoDiPhenylAmine(NDPA)/DPA	71		82			14		50
n-Nitrosodi-n-propylamine	58		65		32-121	11		50
Bis(2-Ethylhexyl)phthalate	64		76		40-140	17		50
Butyl benzyl phthalate	68		83		40-140	20		50
Di-n-butylphthalate	63		75		40-140	17		50
Di-n-octylphthalate	64		75		40-140	16		50
Diethyl phthalate	67		79		40-140	16		50
Dimethyl phthalate	66		77		40-140	15		50
Benzo(a)anthracene	70		79		40-140	12		50
Benzo(a)pyrene	65		74		40-140	13		50
Benzo(b)fluoranthene	64		74		40-140	14		50
Benzo(k)fluoranthene	64		76		40-140	17		50
Chrysene	64		71		40-140	10		50
Acenaphthylene	64		72		40-140	12		50
Anthracene	66		75		40-140	13		50
Benzo(ghi)perylene	68		77		40-140	12		50
Fluorene	64		74		40-140	14		50
Phenanthrene	65		73		40-140	12		50
Dibenzo(a,h)anthracene	67		78		40-140	15		50
Indeno(1,2,3-cd)Pyrene	62		72		40-140	15		50

Lab Control Sample Analysis
Batch Quality Control

Project Name: MCGUINNESS BOULEVARD
Project Number: Not Specified

Lab Number: L1428173
Report Date: 12/02/14

Parameter	LCS %Recovery	Qual	LCSD %Recovery	Qual	%Recovery Limits	RPD	Qual	RPD Limits
Semivolatile Organics by GC/MS - Westborough Lab Associated sample(s): 06 Batch: WG744091-2 WG744091-3								
Pyrene	67		80		35-142	18		50
Biphenyl	60		68			13		50
4-Chloroaniline	69		77		40-140	11		50
2-Nitroaniline	84		94		47-134	11		50
3-Nitroaniline	73		83		26-129	13		50
4-Nitroaniline	80		93		41-125	15		50
Dibenzofuran	65		74		40-140	13		50
2-Methylnaphthalene	62		67		40-140	8		50
1,2,4,5-Tetrachlorobenzene	60		65		40-117	8		50
Acetophenone	58		63		14-144	8		50
2,4,6-Trichlorophenol	76		85		30-130	11		50
P-Chloro-M-Cresol	72		83		26-103	14		50
2-Chlorophenol	64		69		25-102	8		50
2,4-Dichlorophenol	69		76		30-130	10		50
2,4-Dimethylphenol	64		71		30-130	10		50
2-Nitrophenol	82		90		30-130	9		50
4-Nitrophenol	83		97		11-114	16		50
2,4-Dinitrophenol	84		104		4-130	21		50
4,6-Dinitro-o-cresol	88		106		10-130	19		50
Pentachlorophenol	69		82		17-109	17		50
Phenol	62		66		26-90	6		50

Lab Control Sample Analysis
Batch Quality Control

Project Name: MCGUINNESS BOULEVARD
Project Number: Not Specified
Lab Number: L1428173
Report Date: 12/02/14

Parameter	LCS %Recovery	Qual	LCSD %Recovery	Qual	%Recovery Limits	RPD	Qual	RPD Limits
Semivolatile Organics by GC/MS - Westborough Lab Associated sample(s): 06 Batch: WG744091-2 WG744091-3								
2-Methylphenol	64		69		30-130.	8		50
3-Methylphenol/4-Methylphenol	67		74		30-130	10		50
2,4,5-Trichlorophenol	77		86		30-130	11		50
Benzoic Acid	67		80			18		50
Benzyl Alcohol	60		67		40-140	11		50
Carbazole	71		83		54-128	16		50

Surrogate	LCS %Recovery	Qual	LCSD %Recovery	Qual	Acceptance Criteria
2-Fluorophenol	61		65		25-120
Phenol-d6	66		70		10-120
Nitrobenzene-d5	69		74		23-120
2-Fluorobiphenyl	65		71		30-120
2,4,6-Tribromophenol	77		85		0-136
4-Terphenyl-d14	73		87		18-120

PCBS

Project Name: MCGUINNESS BOULEVARD **Lab Number:** L1428173

Project Number: Not Specified **Report Date:** 12/02/14

SAMPLE RESULTS

Lab ID:	L1428173-01	Date Collected:	11/20/14 10:00
Client ID:	VHB SB-4 (0-2')	Date Received:	11/21/14
Sample Location:	209-235 MCGUINESS BLVD.	Field Prep:	Not Specified
Matrix:	Soil	Extraction Method:	EPA 3546
Analytical Method:	1,8082A	Extraction Date:	11/23/14 09:39
Analytical Date:	11/25/14 20:44	Cleanup Method:	EPA 3665A
Analyst:	JW	Cleanup Date:	11/24/14
Percent Solids:	86%	Cleanup Method:	EPA 3660B
		Cleanup Date:	11/24/14

Parameter	Result	Qualifier	Units	RL	MDL	Dilution Factor	Column
Polychlorinated Biphenyls by GC - Westborough Lab							
Aroclor 1016	ND		ug/kg	36.7	2.90	1	A
Aroclor 1221	ND		ug/kg	36.7	3.38	1	A
Aroclor 1232	ND		ug/kg	36.7	4.30	1	A
Aroclor 1242	ND		ug/kg	36.7	4.49	1	A
Aroclor 1248	ND		ug/kg	36.7	3.10	1	A
Aroclor 1254	ND		ug/kg	36.7	3.02	1	A
Aroclor 1260	ND		ug/kg	36.7	2.80	1	A
Aroclor 1262	ND		ug/kg	36.7	1.82	1	A
Aroclor 1268	ND		ug/kg	36.7	5.32	1	A
PCBs, Total	ND		ug/kg	36.7	1.82	1	A

Surrogate	% Recovery	Qualifier	Acceptance Criteria	Column
2,4,5,6-Tetrachloro-m-xylene	80		30-150	A
Decachlorobiphenyl	66		30-150	A
2,4,5,6-Tetrachloro-m-xylene	79		30-150	B
Decachlorobiphenyl	78		30-150	B

Project Name: MCGUINNESS BOULEVARD **Lab Number:** L1428173

Project Number: Not Specified **Report Date:** 12/02/14

SAMPLE RESULTS

Lab ID:	L1428173-02	Date Collected:	11/20/14 10:25
Client ID:	VHB SB-4 (14-16')	Date Received:	11/21/14
Sample Location:	209-235 MCGUINESS BLVD.	Field Prep:	Not Specified
Matrix:	Soil	Extraction Method:	EPA 3546
Analytical Method:	1,8082A	Extraction Date:	11/23/14 09:39
Analytical Date:	11/25/14 20:58	Cleanup Method:	EPA 3665A
Analyst:	JW	Cleanup Date:	11/24/14
Percent Solids:	85%	Cleanup Method:	EPA 3660B
		Cleanup Date:	11/24/14

Parameter	Result	Qualifier	Units	RL	MDL	Dilution Factor	Column
Polychlorinated Biphenyls by GC - Westborough Lab							
Aroclor 1016	ND		ug/kg	38.9	3.08	1	A
Aroclor 1221	ND		ug/kg	38.9	3.59	1	A
Aroclor 1232	ND		ug/kg	38.9	4.56	1	A
Aroclor 1242	ND		ug/kg	38.9	4.76	1	A
Aroclor 1248	ND		ug/kg	38.9	3.29	1	A
Aroclor 1254	ND		ug/kg	38.9	3.20	1	A
Aroclor 1260	ND		ug/kg	38.9	2.97	1	A
Aroclor 1262	ND		ug/kg	38.9	1.93	1	A
Aroclor 1268	ND		ug/kg	38.9	5.64	1	A
PCBs, Total	ND		ug/kg	38.9	1.93	1	A

Surrogate	% Recovery	Qualifier	Acceptance Criteria	Column
2,4,5,6-Tetrachloro-m-xylene	69		30-150	A
Decachlorobiphenyl	60		30-150	A
2,4,5,6-Tetrachloro-m-xylene	70		30-150	B
Decachlorobiphenyl	74		30-150	B

Project Name: MCGUINNESS BOULEVARD **Lab Number:** L1428173

Project Number: Not Specified **Report Date:** 12/02/14

SAMPLE RESULTS

Lab ID:	L1428173-03	Date Collected:	11/20/14 11:15
Client ID:	VHB SB-1 (0-2')	Date Received:	11/21/14
Sample Location:	209-235 MCGUINESS BLVD.	Field Prep:	Not Specified
Matrix:	Soil	Extraction Method:	EPA 3546
Analytical Method:	1,8082A	Extraction Date:	11/23/14 09:39
Analytical Date:	11/25/14 21:12	Cleanup Method:	EPA 3665A
Analyst:	JW	Cleanup Date:	11/24/14
Percent Solids:	88%	Cleanup Method:	EPA 3660B
		Cleanup Date:	11/24/14

Parameter	Result	Qualifier	Units	RL	MDL	Dilution Factor	Column
Polychlorinated Biphenyls by GC - Westborough Lab							
Aroclor 1016	ND		ug/kg	36.7	2.90	1	A
Aroclor 1221	ND		ug/kg	36.7	3.38	1	A
Aroclor 1232	ND		ug/kg	36.7	4.30	1	A
Aroclor 1242	ND		ug/kg	36.7	4.49	1	A
Aroclor 1248	ND		ug/kg	36.7	3.10	1	A
Aroclor 1254	ND		ug/kg	36.7	3.02	1	A
Aroclor 1260	ND		ug/kg	36.7	2.80	1	A
Aroclor 1262	ND		ug/kg	36.7	1.82	1	A
Aroclor 1268	ND		ug/kg	36.7	5.32	1	A
PCBs, Total	ND		ug/kg	36.7	1.82	1	A

Surrogate	% Recovery	Qualifier	Acceptance Criteria	Column
2,4,5,6-Tetrachloro-m-xylene	72		30-150	A
Decachlorobiphenyl	71		30-150	A
2,4,5,6-Tetrachloro-m-xylene	72		30-150	B
Decachlorobiphenyl	82		30-150	B

Project Name: MCGUINNESS BOULEVARD **Lab Number:** L1428173

Project Number: Not Specified **Report Date:** 12/02/14

SAMPLE RESULTS

Lab ID:	L1428173-04	Date Collected:	11/20/14 11:40
Client ID:	VHB SB-1 (14-16')	Date Received:	11/21/14
Sample Location:	209-235 MCGUINESS BLVD.	Field Prep:	Not Specified
Matrix:	Soil	Extraction Method:	EPA 3546
Analytical Method:	1,8082A	Extraction Date:	11/23/14 09:39
Analytical Date:	11/25/14 21:26	Cleanup Method:	EPA 3665A
Analyst:	JW	Cleanup Date:	11/24/14
Percent Solids:	86%	Cleanup Method:	EPA 3660B
		Cleanup Date:	11/24/14

Parameter	Result	Qualifier	Units	RL	MDL	Dilution Factor	Column
Polychlorinated Biphenyls by GC - Westborough Lab							
Aroclor 1016	ND		ug/kg	37.6	2.97	1	A
Aroclor 1221	ND		ug/kg	37.6	3.47	1	A
Aroclor 1232	ND		ug/kg	37.6	4.41	1	A
Aroclor 1242	ND		ug/kg	37.6	4.61	1	A
Aroclor 1248	ND		ug/kg	37.6	3.18	1	A
Aroclor 1254	ND		ug/kg	37.6	3.09	1	A
Aroclor 1260	ND		ug/kg	37.6	2.87	1	A
Aroclor 1262	ND		ug/kg	37.6	1.87	1	A
Aroclor 1268	ND		ug/kg	37.6	5.46	1	A
PCBs, Total	ND		ug/kg	37.6	1.87	1	A

Surrogate	% Recovery	Qualifier	Acceptance Criteria	Column
2,4,5,6-Tetrachloro-m-xylene	77		30-150	A
Decachlorobiphenyl	68		30-150	A
2,4,5,6-Tetrachloro-m-xylene	77		30-150	B
Decachlorobiphenyl	82		30-150	B

Project Name: MCGUINNESS BOULEVARD **Lab Number:** L1428173

Project Number: Not Specified **Report Date:** 12/02/14

SAMPLE RESULTS

Lab ID:	L1428173-05	Date Collected:	11/20/14 11:45
Client ID:	VHB SB-1 (8-10')	Date Received:	11/21/14
Sample Location:	209-235 MCGUINESS BLVD.	Field Prep:	Not Specified
Matrix:	Soil	Extraction Method:	EPA 3546
Analytical Method:	1,8082A	Extraction Date:	11/23/14 09:39
Analytical Date:	11/25/14 21:40	Cleanup Method:	EPA 3665A
Analyst:	JW	Cleanup Date:	11/24/14
Percent Solids:	85%	Cleanup Method:	EPA 3660B
		Cleanup Date:	11/24/14

Parameter	Result	Qualifier	Units	RL	MDL	Dilution Factor	Column
Polychlorinated Biphenyls by GC - Westborough Lab							
Aroclor 1016	ND		ug/kg	37.8	2.99	1	A
Aroclor 1221	ND		ug/kg	37.8	3.49	1	A
Aroclor 1232	ND		ug/kg	37.8	4.43	1	A
Aroclor 1242	ND		ug/kg	37.8	4.63	1	A
Aroclor 1248	ND		ug/kg	37.8	3.19	1	A
Aroclor 1254	ND		ug/kg	37.8	3.11	1	A
Aroclor 1260	ND		ug/kg	37.8	2.88	1	A
Aroclor 1262	ND		ug/kg	37.8	1.88	1	A
Aroclor 1268	ND		ug/kg	37.8	5.48	1	A
PCBs, Total	ND		ug/kg	37.8	1.88	1	A

Surrogate	% Recovery	Qualifier	Acceptance Criteria	Column
2,4,5,6-Tetrachloro-m-xylene	70		30-150	A
Decachlorobiphenyl	80		30-150	A
2,4,5,6-Tetrachloro-m-xylene	71		30-150	B
Decachlorobiphenyl	90		30-150	B

Project Name: MCGUINNESS BOULEVARD **Lab Number:** L1428173

Project Number: Not Specified **Report Date:** 12/02/14

SAMPLE RESULTS

Lab ID:	L1428173-06	Date Collected:	11/20/14 13:20
Client ID:	VHB SB-5 (0-2')	Date Received:	11/21/14
Sample Location:	209-235 MCGUINESS BLVD.	Field Prep:	Not Specified
Matrix:	Soil	Extraction Method:	EPA 3546
Analytical Method:	1,8082A	Extraction Date:	11/23/14 09:39
Analytical Date:	11/25/14 21:53	Cleanup Method:	EPA 3665A
Analyst:	JW	Cleanup Date:	11/24/14
Percent Solids:	85%	Cleanup Method:	EPA 3660B
		Cleanup Date:	11/24/14

Parameter	Result	Qualifier	Units	RL	MDL	Dilution Factor	Column
Polychlorinated Biphenyls by GC - Westborough Lab							
Aroclor 1016	ND		ug/kg	38.5	3.04	1	A
Aroclor 1221	ND		ug/kg	38.5	3.55	1	A
Aroclor 1232	ND		ug/kg	38.5	4.51	1	A
Aroclor 1242	ND		ug/kg	38.5	4.71	1	A
Aroclor 1248	ND		ug/kg	38.5	3.25	1	A
Aroclor 1254	ND		ug/kg	38.5	3.16	1	A
Aroclor 1260	ND		ug/kg	38.5	2.93	1	A
Aroclor 1262	ND		ug/kg	38.5	1.91	1	A
Aroclor 1268	ND		ug/kg	38.5	5.58	1	A
PCBs, Total	ND		ug/kg	38.5	1.91	1	A

Surrogate	% Recovery	Qualifier	Acceptance Criteria	Column
2,4,5,6-Tetrachloro-m-xylene	73		30-150	A
Decachlorobiphenyl	65		30-150	A
2,4,5,6-Tetrachloro-m-xylene	73		30-150	B
Decachlorobiphenyl	75		30-150	B

Project Name: MCGUINNESS BOULEVARD **Lab Number:** L1428173

Project Number: Not Specified **Report Date:** 12/02/14

SAMPLE RESULTS

Lab ID:	L1428173-07	Date Collected:	11/20/14 13:45
Client ID:	VHB SB-5 (14-16')	Date Received:	11/21/14
Sample Location:	209-235 MCGUINESS BLVD.	Field Prep:	Not Specified
Matrix:	Soil	Extraction Method:	EPA 3546
Analytical Method:	1,8082A	Extraction Date:	11/23/14 09:39
Analytical Date:	11/25/14 22:07	Cleanup Method:	EPA 3665A
Analyst:	JW	Cleanup Date:	11/24/14
Percent Solids:	67%	Cleanup Method:	EPA 3660B
		Cleanup Date:	11/24/14

Parameter	Result	Qualifier	Units	RL	MDL	Dilution Factor	Column
Polychlorinated Biphenyls by GC - Westborough Lab							
Aroclor 1016	ND		ug/kg	47.9	3.78	1	A
Aroclor 1221	ND		ug/kg	47.9	4.42	1	A
Aroclor 1232	ND		ug/kg	47.9	5.61	1	A
Aroclor 1242	ND		ug/kg	47.9	5.86	1	A
Aroclor 1248	ND		ug/kg	47.9	4.04	1	A
Aroclor 1254	ND		ug/kg	47.9	3.94	1	A
Aroclor 1260	ND		ug/kg	47.9	3.65	1	A
Aroclor 1262	ND		ug/kg	47.9	2.38	1	A
Aroclor 1268	ND		ug/kg	47.9	6.94	1	A
PCBs, Total	ND		ug/kg	47.9	2.38	1	A

Surrogate	% Recovery	Qualifier	Acceptance Criteria	Column
2,4,5,6-Tetrachloro-m-xylene	79		30-150	A
Decachlorobiphenyl	71		30-150	A
2,4,5,6-Tetrachloro-m-xylene	78		30-150	B
Decachlorobiphenyl	85		30-150	B

Project Name: MCGUINNESS BOULEVARD **Lab Number:** L1428173

Project Number: Not Specified **Report Date:** 12/02/14

SAMPLE RESULTS

Lab ID:	L1428173-08	Date Collected:	11/20/14 13:50
Client ID:	VHB GW-1	Date Received:	11/21/14
Sample Location:	209-235 MCGUINESS BLVD.	Field Prep:	Not Specified
Matrix:	Water	Extraction Method:	EPA 3510C
Analytical Method:	1,8082A	Extraction Date:	11/24/14 16:28
Analytical Date:	11/25/14 20:31	Cleanup Method:	EPA 3665A
Analyst:	JW	Cleanup Date:	11/25/14
		Cleanup Method:	EPA 3660B
		Cleanup Date:	11/25/14

Parameter	Result	Qualifier	Units	RL	MDL	Dilution Factor	Column
Polychlorinated Biphenyls by GC - Westborough Lab							
Aroclor 1016	ND		ug/l	0.083	0.055	1	A
Aroclor 1221	ND		ug/l	0.083	0.053	1	A
Aroclor 1232	ND		ug/l	0.083	0.031	1	A
Aroclor 1242	ND		ug/l	0.083	0.060	1	A
Aroclor 1248	ND		ug/l	0.083	0.051	1	A
Aroclor 1254	ND		ug/l	0.083	0.034	1	A
Aroclor 1260	ND		ug/l	0.083	0.032	1	A
Aroclor 1262	ND		ug/l	0.083	0.029	1	A
Aroclor 1268	ND		ug/l	0.083	0.038	1	A
PCBs, Total	ND		ug/l	0.083	0.029	1	A

Surrogate	% Recovery	Qualifier	Acceptance Criteria	Column
2,4,5,6-Tetrachloro-m-xylene	63		30-150	B
Decachlorobiphenyl	71		30-150	B
2,4,5,6-Tetrachloro-m-xylene	54		30-150	A
Decachlorobiphenyl	74		30-150	A

Project Name: MCGUINNESS BOULEVARD **Lab Number:** L1428173

Project Number: Not Specified **Report Date:** 12/02/14

SAMPLE RESULTS

Lab ID:	L1428173-09	Date Collected:	11/20/14 14:40
Client ID:	VHB SB-3 (0-2')	Date Received:	11/21/14
Sample Location:	209-235 MCGUINESS BLVD.	Field Prep:	Not Specified
Matrix:	Soil	Extraction Method:	EPA 3546
Analytical Method:	1,8082A	Extraction Date:	11/23/14 09:39
Analytical Date:	11/25/14 22:21	Cleanup Method:	EPA 3665A
Analyst:	JW	Cleanup Date:	11/24/14
Percent Solids:	85%	Cleanup Method:	EPA 3660B
		Cleanup Date:	11/24/14

Parameter	Result	Qualifier	Units	RL	MDL	Dilution Factor	Column
Polychlorinated Biphenyls by GC - Westborough Lab							
Aroclor 1016	ND		ug/kg	39.0	3.08	1	A
Aroclor 1221	ND		ug/kg	39.0	3.59	1	A
Aroclor 1232	ND		ug/kg	39.0	4.57	1	A
Aroclor 1242	ND		ug/kg	39.0	4.77	1	A
Aroclor 1248	ND		ug/kg	39.0	3.29	1	A
Aroclor 1254	ND		ug/kg	39.0	3.20	1	A
Aroclor 1260	37.6	J	ug/kg	39.0	2.97	1	A
Aroclor 1262	ND		ug/kg	39.0	1.93	1	A
Aroclor 1268	16.6	J	ug/kg	39.0	5.65	1	B
PCBs, Total	54.2	J	ug/kg	39.0	1.93	1	A

Surrogate	% Recovery	Qualifier	Acceptance Criteria	Column
2,4,5,6-Tetrachloro-m-xylene	42		30-150	A
Decachlorobiphenyl	54		30-150	A
2,4,5,6-Tetrachloro-m-xylene	45		30-150	B
Decachlorobiphenyl	57		30-150	B

Project Name: MCGUINNESS BOULEVARD **Lab Number:** L1428173

Project Number: Not Specified **Report Date:** 12/02/14

SAMPLE RESULTS

Lab ID:	L1428173-10	Date Collected:	11/20/14 14:55
Client ID:	VHB SB-3 (14-16')	Date Received:	11/21/14
Sample Location:	209-235 MCGUINESS BLVD.	Field Prep:	Not Specified
Matrix:	Soil	Extraction Method:	EPA 3546
Analytical Method:	1,8082A	Extraction Date:	11/23/14 09:39
Analytical Date:	11/25/14 22:34	Cleanup Method:	EPA 3665A
Analyst:	JW	Cleanup Date:	11/24/14
Percent Solids:	86%	Cleanup Method:	EPA 3660B
		Cleanup Date:	11/24/14

Parameter	Result	Qualifier	Units	RL	MDL	Dilution Factor	Column
Polychlorinated Biphenyls by GC - Westborough Lab							
Aroclor 1016	ND		ug/kg	37.2	2.94	1	A
Aroclor 1221	ND		ug/kg	37.2	3.43	1	A
Aroclor 1232	ND		ug/kg	37.2	4.36	1	A
Aroclor 1242	ND		ug/kg	37.2	4.56	1	A
Aroclor 1248	ND		ug/kg	37.2	3.14	1	A
Aroclor 1254	ND		ug/kg	37.2	3.06	1	A
Aroclor 1260	30.4	J	ug/kg	37.2	2.84	1	B
Aroclor 1262	ND		ug/kg	37.2	1.84	1	A
Aroclor 1268	ND		ug/kg	37.2	5.40	1	A
PCBs, Total	30.4	J	ug/kg	37.2	1.84	1	A

Surrogate	% Recovery	Qualifier	Acceptance Criteria	Column
2,4,5,6-Tetrachloro-m-xylene	70		30-150	A
Decachlorobiphenyl	82		30-150	A
2,4,5,6-Tetrachloro-m-xylene	72		30-150	B
Decachlorobiphenyl	94		30-150	B

Project Name: MCGUINNESS BOULEVARD **Lab Number:** L1428173

Project Number: Not Specified **Report Date:** 12/02/14

SAMPLE RESULTS

Lab ID:	L1428173-11	Date Collected:	11/20/14 15:20
Client ID:	VHB SB-2 (0-2')	Date Received:	11/21/14
Sample Location:	209-235 MCGUINESS BLVD.	Field Prep:	Not Specified
Matrix:	Soil	Extraction Method:	EPA 3546
Analytical Method:	1,8082A	Extraction Date:	11/23/14 09:39
Analytical Date:	11/25/14 22:48	Cleanup Method:	EPA 3665A
Analyst:	JW	Cleanup Date:	11/24/14
Percent Solids:	89%	Cleanup Method:	EPA 3660B
		Cleanup Date:	11/24/14

Parameter	Result	Qualifier	Units	RL	MDL	Dilution Factor	Column
Polychlorinated Biphenyls by GC - Westborough Lab							
Aroclor 1016	ND		ug/kg	36.2	2.86	1	A
Aroclor 1221	ND		ug/kg	36.2	3.34	1	A
Aroclor 1232	ND		ug/kg	36.2	4.25	1	A
Aroclor 1242	ND		ug/kg	36.2	4.44	1	A
Aroclor 1248	ND		ug/kg	36.2	3.06	1	A
Aroclor 1254	ND		ug/kg	36.2	2.98	1	A
Aroclor 1260	ND		ug/kg	36.2	2.76	1	A
Aroclor 1262	ND		ug/kg	36.2	1.80	1	A
Aroclor 1268	ND		ug/kg	36.2	5.26	1	A
PCBs, Total	ND		ug/kg	36.2	1.80	1	A

Surrogate	% Recovery	Qualifier	Acceptance Criteria	Column
2,4,5,6-Tetrachloro-m-xylene	68		30-150	A
Decachlorobiphenyl	74		30-150	A
2,4,5,6-Tetrachloro-m-xylene	70		30-150	B
Decachlorobiphenyl	86		30-150	B

Project Name: MCGUINNESS BOULEVARD **Lab Number:** L1428173

Project Number: Not Specified **Report Date:** 12/02/14

SAMPLE RESULTS

Lab ID:	L1428173-12	Date Collected:	11/20/14 15:40
Client ID:	VHB SB-2 (14-16')	Date Received:	11/21/14
Sample Location:	209-235 MCGUINESS BLVD.	Field Prep:	Not Specified
Matrix:	Soil	Extraction Method:	EPA 3546
Analytical Method:	1,8082A	Extraction Date:	11/23/14 09:39
Analytical Date:	11/25/14 23:02	Cleanup Method:	EPA 3665A
Analyst:	JW	Cleanup Date:	11/24/14
Percent Solids:	84%	Cleanup Method:	EPA 3660B
		Cleanup Date:	11/24/14

Parameter	Result	Qualifier	Units	RL	MDL	Dilution Factor	Column
Polychlorinated Biphenyls by GC - Westborough Lab							
Aroclor 1016	ND		ug/kg	39.0	3.08	1	A
Aroclor 1221	ND		ug/kg	39.0	3.60	1	A
Aroclor 1232	ND		ug/kg	39.0	4.57	1	A
Aroclor 1242	ND		ug/kg	39.0	4.77	1	A
Aroclor 1248	ND		ug/kg	39.0	3.29	1	A
Aroclor 1254	ND		ug/kg	39.0	3.20	1	A
Aroclor 1260	ND		ug/kg	39.0	2.97	1	A
Aroclor 1262	ND		ug/kg	39.0	1.93	1	A
Aroclor 1268	ND		ug/kg	39.0	5.66	1	A
PCBs, Total	ND		ug/kg	39.0	1.93	1	A

Surrogate	% Recovery	Qualifier	Acceptance Criteria	Column
2,4,5,6-Tetrachloro-m-xylene	73		30-150	A
Decachlorobiphenyl	65		30-150	A
2,4,5,6-Tetrachloro-m-xylene	74		30-150	B
Decachlorobiphenyl	78		30-150	B

Project Name: MCGUINNESS BOULEVARD

Project Number: Not Specified

Lab Number: L1428173

Report Date: 12/02/14

Method Blank Analysis
Batch Quality Control

Analytical Method: 1,8082A
Analytical Date: 11/26/14 00:38
Analyst: JW

Extraction Method: EPA 3546
Extraction Date: 11/23/14 09:39
Cleanup Method: EPA 3665A
Cleanup Date: 11/24/14
Cleanup Method: EPA 3660B
Cleanup Date: 11/24/14

Parameter	Result	Qualifier	Units	RL	MDL	Column
Polychlorinated Biphenyls by GC - Westborough Lab for sample(s): 01-07,09-12 Batch: WG743113-1						
Aroclor 1016	ND		ug/kg	31.4	2.48	A
Aroclor 1221	ND		ug/kg	31.4	2.90	A
Aroclor 1232	ND		ug/kg	31.4	3.68	A
Aroclor 1242	ND		ug/kg	31.4	3.84	A
Aroclor 1248	ND		ug/kg	31.4	2.65	A
Aroclor 1260	ND		ug/kg	31.4	2.39	A
Aroclor 1262	ND		ug/kg	31.4	1.56	A
Aroclor 1268	ND		ug/kg	31.4	4.55	A
PCBs, Total	18.0	J	ug/kg	31.4	1.56	A
Aroclor 1254	18.0	J	ug/kg	31.4	2.58	B

Surrogate	%Recovery	Qualifier	Acceptance Criteria	Column
2,4,5,6-Tetrachloro-m-xylene	43		30-150	A
Decachlorobiphenyl	46		30-150	A
2,4,5,6-Tetrachloro-m-xylene	48		30-150	B
Decachlorobiphenyl	60		30-150	B

Project Name: MCGUINNESS BOULEVARD

Project Number: Not Specified

Lab Number: L1428173

Report Date: 12/02/14

Method Blank Analysis
Batch Quality Control

Analytical Method: 1,8082A
Analytical Date: 11/25/14 20:43
Analyst: JW

Extraction Method: EPA 3510C
Extraction Date: 11/24/14 16:28
Cleanup Method: EPA 3665A
Cleanup Date: 11/25/14
Cleanup Method: EPA 3660B
Cleanup Date: 11/25/14

Parameter	Result	Qualifier	Units	RL	MDL	Column
Polychlorinated Biphenyls by GC - Westborough Lab for sample(s): 08 Batch: WG743446-1						
Aroclor 1016	ND		ug/l	0.083	0.055	A
Aroclor 1221	ND		ug/l	0.083	0.053	A
Aroclor 1232	ND		ug/l	0.083	0.031	A
Aroclor 1242	ND		ug/l	0.083	0.060	A
Aroclor 1248	ND		ug/l	0.083	0.051	A
Aroclor 1254	ND		ug/l	0.083	0.034	A
Aroclor 1260	ND		ug/l	0.083	0.032	A
Aroclor 1262	ND		ug/l	0.083	0.029	A
Aroclor 1268	ND		ug/l	0.083	0.038	A
PCBs, Total	ND		ug/l	0.083	0.029	A

Surrogate	%Recovery	Qualifier	Acceptance Criteria	Column
2,4,5,6-Tetrachloro-m-xylene	57		30-150	B
Decachlorobiphenyl	65		30-150	B
2,4,5,6-Tetrachloro-m-xylene	51		30-150	A
Decachlorobiphenyl	73		30-150	A

Lab Control Sample Analysis
Batch Quality Control

Project Name: MCGUINNESS BOULEVARD
Project Number: Not Specified
Lab Number: L1428173
Report Date: 12/02/14

Parameter	LCS %Recovery	Qual	LCSD %Recovery	Qual	%Recovery Limits	RPD	Qual	RPD Limits	Column
Polychlorinated Biphenyls by GC - Westborough Lab Associated sample(s): 01-07,09-12 Batch: WG743113-2 WG743113-3									
Aroclor 1016	77		82		40-140	6		50	A
Aroclor 1260	59		62		40-140	5		50	A

Surrogate	LCS %Recovery	Qual	LCSD %Recovery	Qual	Acceptance Criteria	Column
2,4,5,6-Tetrachloro-m-xylene	63		61		30-150	A
Decachlorobiphenyl	57		47		30-150	A
2,4,5,6-Tetrachloro-m-xylene	69		63		30-150	B
Decachlorobiphenyl	76		62		30-150	B

Lab Control Sample Analysis
Batch Quality Control

Project Name: MCGUINNESS BOULEVARD
Project Number: Not Specified

Lab Number: L1428173
Report Date: 12/02/14

Parameter	LCS %Recovery	Qual	LCSD %Recovery	Qual	%Recovery Limits	RPD	Qual	RPD Limits	Column
Polychlorinated Biphenyls by GC - Westborough Lab Associated sample(s): 08 Batch: WG743446-2 WG743446-3									
Aroclor 1016	68		66		40-140	3		50	A
Aroclor 1260	73		75		40-140	2		50	A

Surrogate	LCS %Recovery	Qual	LCSD %Recovery	Qual	Acceptance Criteria	Column
2,4,5,6-Tetrachloro-m-xylene	53		55		30-150	B
Decachlorobiphenyl	64		62		30-150	B
2,4,5,6-Tetrachloro-m-xylene	50		50		30-150	A
Decachlorobiphenyl	69		66		30-150	A

PESTICIDES

Project Name: MCGUINNESS BOULEVARD **Lab Number:** L1428173

Project Number: Not Specified **Report Date:** 12/02/14

SAMPLE RESULTS

Lab ID:	L1428173-01	Date Collected:	11/20/14 10:00
Client ID:	VHB SB-4 (0-2')	Date Received:	11/21/14
Sample Location:	209-235 MCGUINESS BLVD.	Field Prep:	Not Specified
Matrix:	Soil	Extraction Method:	EPA 3546
Analytical Method:	1,8081B	Extraction Date:	11/23/14 15:38
Analytical Date:	11/25/14 16:32	Cleanup Method:	EPA 3620B
Analyst:	SS	Cleanup Date:	11/25/14
Percent Solids:	86%		

Parameter	Result	Qualifier	Units	RL	MDL	Dilution Factor	Column
Organochlorine Pesticides by GC - Westborough Lab							
Delta-BHC	ND		ug/kg	1.76	0.346	1	A
Lindane	ND		ug/kg	0.735	0.329	1	A
Alpha-BHC	ND		ug/kg	0.735	0.209	1	A
Beta-BHC	ND		ug/kg	1.76	0.669	1	A
Heptachlor	ND		ug/kg	0.882	0.396	1	A
Aldrin	ND		ug/kg	1.76	0.621	1	A
Heptachlor epoxide	ND		ug/kg	3.31	0.992	1	A
Endrin	ND		ug/kg	0.735	0.301	1	A
Endrin ketone	ND		ug/kg	1.76	0.454	1	A
Dieldrin	ND		ug/kg	1.10	0.551	1	A
4,4'-DDE	ND		ug/kg	1.76	0.408	1	A
4,4'-DDD	ND		ug/kg	1.76	0.629	1	A
4,4'-DDT	3.05	J	ug/kg	3.31	1.42	1	A
Endosulfan I	ND		ug/kg	1.76	0.417	1	A
Endosulfan II	ND		ug/kg	1.76	0.590	1	A
Endosulfan sulfate	ND		ug/kg	0.735	0.350	1	A
Methoxychlor	ND		ug/kg	3.31	1.03	1	A
Toxaphene	ND		ug/kg	33.1	9.26	1	A
cis-Chlordane	ND		ug/kg	2.20	0.615	1	A
trans-Chlordane	ND		ug/kg	2.20	0.582	1	A
Chlordane	ND		ug/kg	14.3	5.84	1	A

Surrogate	% Recovery	Qualifier	Acceptance Criteria	Column
2,4,5,6-Tetrachloro-m-xylene	83		30-150	B
Decachlorobiphenyl	78		30-150	B
2,4,5,6-Tetrachloro-m-xylene	76		30-150	A
Decachlorobiphenyl	66		30-150	A

Project Name: MCGUINNESS BOULEVARD **Lab Number:** L1428173

Project Number: Not Specified **Report Date:** 12/02/14

SAMPLE RESULTS

Lab ID:	L1428173-02	Date Collected:	11/20/14 10:25
Client ID:	VHB SB-4 (14-16')	Date Received:	11/21/14
Sample Location:	209-235 MCGUINESS BLVD.	Field Prep:	Not Specified
Matrix:	Soil	Extraction Method:	EPA 3546
Analytical Method:	1,8081B	Extraction Date:	11/23/14 15:38
Analytical Date:	11/25/14 16:48	Cleanup Method:	EPA 3620B
Analyst:	SS	Cleanup Date:	11/25/14
Percent Solids:	85%		

Parameter	Result	Qualifier	Units	RL	MDL	Dilution Factor	Column
Organochlorine Pesticides by GC - Westborough Lab							
Delta-BHC	ND		ug/kg	1.86	0.364	1	A
Lindane	ND		ug/kg	0.775	0.346	1	A
Alpha-BHC	ND		ug/kg	0.775	0.220	1	A
Beta-BHC	ND		ug/kg	1.86	0.705	1	A
Heptachlor	ND		ug/kg	0.930	0.417	1	A
Aldrin	ND		ug/kg	1.86	0.655	1	A
Heptachlor epoxide	ND		ug/kg	3.49	1.05	1	A
Endrin	ND		ug/kg	0.775	0.318	1	A
Endrin ketone	ND		ug/kg	1.86	0.479	1	A
Dieldrin	ND		ug/kg	1.16	0.581	1	A
4,4'-DDE	ND		ug/kg	1.86	0.430	1	A
4,4'-DDD	ND		ug/kg	1.86	0.663	1	A
4,4'-DDT	ND		ug/kg	3.49	1.50	1	A
Endosulfan I	ND		ug/kg	1.86	0.439	1	A
Endosulfan II	ND		ug/kg	1.86	0.622	1	A
Endosulfan sulfate	ND		ug/kg	0.775	0.369	1	A
Methoxychlor	ND		ug/kg	3.49	1.08	1	A
Toxaphene	ND		ug/kg	34.9	9.77	1	A
cis-Chlordane	ND		ug/kg	2.32	0.648	1	A
trans-Chlordane	ND		ug/kg	2.32	0.614	1	A
Chlordane	ND		ug/kg	15.1	6.16	1	A

Surrogate	% Recovery	Qualifier	Acceptance Criteria	Column
2,4,5,6-Tetrachloro-m-xylene	73		30-150	B
Decachlorobiphenyl	74		30-150	B
2,4,5,6-Tetrachloro-m-xylene	70		30-150	A
Decachlorobiphenyl	60		30-150	A

Project Name: MCGUINNESS BOULEVARD **Lab Number:** L1428173

Project Number: Not Specified **Report Date:** 12/02/14

SAMPLE RESULTS

Lab ID:	L1428173-03	Date Collected:	11/20/14 11:15
Client ID:	VHB SB-1 (0-2')	Date Received:	11/21/14
Sample Location:	209-235 MCGUINESS BLVD.	Field Prep:	Not Specified
Matrix:	Soil	Extraction Method:	EPA 3546
Analytical Method:	1,8081B	Extraction Date:	11/23/14 15:38
Analytical Date:	11/25/14 17:04	Cleanup Method:	EPA 3620B
Analyst:	SS	Cleanup Date:	11/25/14
Percent Solids:	88%		

Parameter	Result	Qualifier	Units	RL	MDL	Dilution Factor	Column
Organochlorine Pesticides by GC - Westborough Lab							
Delta-BHC	ND		ug/kg	1.79	0.351	1	A
Lindane	ND		ug/kg	0.748	0.334	1	A
Alpha-BHC	ND		ug/kg	0.748	0.212	1	A
Beta-BHC	ND		ug/kg	1.79	0.680	1	A
Heptachlor	ND		ug/kg	0.897	0.402	1	A
Aldrin	ND		ug/kg	1.79	0.632	1	A
Heptachlor epoxide	ND		ug/kg	3.36	1.01	1	A
Endrin	ND		ug/kg	0.748	0.306	1	A
Endrin ketone	ND		ug/kg	1.79	0.462	1	A
Dieldrin	ND		ug/kg	1.12	0.561	1	A
4,4'-DDE	ND		ug/kg	1.79	0.415	1	A
4,4'-DDD	ND		ug/kg	1.79	0.640	1	A
4,4'-DDT	ND		ug/kg	3.36	1.44	1	A
Endosulfan I	ND		ug/kg	1.79	0.424	1	A
Endosulfan II	ND		ug/kg	1.79	0.600	1	A
Endosulfan sulfate	ND		ug/kg	0.748	0.356	1	A
Methoxychlor	ND		ug/kg	3.36	1.05	1	A
Toxaphene	ND		ug/kg	33.6	9.42	1	A
cis-Chlordane	ND		ug/kg	2.24	0.625	1	A
trans-Chlordane	ND		ug/kg	2.24	0.592	1	A
Chlordane	ND		ug/kg	14.6	5.94	1	A

Surrogate	% Recovery	Qualifier	Acceptance Criteria	Column
2,4,5,6-Tetrachloro-m-xylene	80		30-150	B
Decachlorobiphenyl	75		30-150	B
2,4,5,6-Tetrachloro-m-xylene	75		30-150	A
Decachlorobiphenyl	82		30-150	A

Project Name: MCGUINNESS BOULEVARD **Lab Number:** L1428173

Project Number: Not Specified **Report Date:** 12/02/14

SAMPLE RESULTS

Lab ID:	L1428173-04	Date Collected:	11/20/14 11:40
Client ID:	VHB SB-1 (14-16')	Date Received:	11/21/14
Sample Location:	209-235 MCGUINESS BLVD.	Field Prep:	Not Specified
Matrix:	Soil	Extraction Method:	EPA 3546
Analytical Method:	1,8081B	Extraction Date:	11/23/14 15:38
Analytical Date:	11/25/14 17:20	Cleanup Method:	EPA 3620B
Analyst:	SS	Cleanup Date:	11/25/14
Percent Solids:	86%		

Parameter	Result	Qualifier	Units	RL	MDL	Dilution Factor	Column
Organochlorine Pesticides by GC - Westborough Lab							
Delta-BHC	ND		ug/kg	1.78	0.350	1	A
Lindane	ND		ug/kg	0.744	0.332	1	A
Alpha-BHC	ND		ug/kg	0.744	0.211	1	A
Beta-BHC	ND		ug/kg	1.78	0.677	1	A
Heptachlor	ND		ug/kg	0.892	0.400	1	A
Aldrin	ND		ug/kg	1.78	0.628	1	A
Heptachlor epoxide	ND		ug/kg	3.35	1.00	1	A
Endrin	ND		ug/kg	0.744	0.305	1	A
Endrin ketone	ND		ug/kg	1.78	0.460	1	A
Dieldrin	ND		ug/kg	1.12	0.558	1	A
4,4'-DDE	ND		ug/kg	1.78	0.413	1	A
4,4'-DDD	ND		ug/kg	1.78	0.637	1	A
4,4'-DDT	ND		ug/kg	3.35	1.44	1	A
Endosulfan I	ND		ug/kg	1.78	0.422	1	A
Endosulfan II	ND		ug/kg	1.78	0.596	1	A
Endosulfan sulfate	ND		ug/kg	0.744	0.354	1	A
Methoxychlor	ND		ug/kg	3.35	1.04	1	A
Toxaphene	ND		ug/kg	33.5	9.37	1	A
cis-Chlordane	ND		ug/kg	2.23	0.622	1	A
trans-Chlordane	ND		ug/kg	2.23	0.589	1	A
Chlordane	ND		ug/kg	14.5	5.91	1	A

Surrogate	% Recovery	Qualifier	Acceptance Criteria	Column
2,4,5,6-Tetrachloro-m-xylene	84		30-150	B
Decachlorobiphenyl	83		30-150	B
2,4,5,6-Tetrachloro-m-xylene	83		30-150	A
Decachlorobiphenyl	70		30-150	A

Project Name: MCGUINNESS BOULEVARD **Lab Number:** L1428173

Project Number: Not Specified **Report Date:** 12/02/14

SAMPLE RESULTS

Lab ID:	L1428173-05 D	Date Collected:	11/20/14 11:45
Client ID:	VHB SB-1 (8-10')	Date Received:	11/21/14
Sample Location:	209-235 MCGUINESS BLVD.	Field Prep:	Not Specified
Matrix:	Soil	Extraction Method:	EPA 3546
Analytical Method:	1,8081B	Extraction Date:	11/23/14 15:38
Analytical Date:	12/01/14 22:39	Cleanup Method:	EPA 3620B
Analyst:	SS	Cleanup Date:	11/25/14
Percent Solids:	85%		

Parameter	Result	Qualifier	Units	RL	MDL	Dilution Factor	Column
Organochlorine Pesticides by GC - Westborough Lab							
Delta-BHC	ND		ug/kg	18.2	3.56	10	A
Lindane	ND		ug/kg	7.57	3.38	10	A
Alpha-BHC	ND		ug/kg	7.57	2.15	10	A
Beta-BHC	ND		ug/kg	18.2	6.89	10	A
Heptachlor	ND		ug/kg	9.08	4.07	10	A
Aldrin	ND		ug/kg	18.2	6.40	10	A
Heptachlor epoxide	ND		ug/kg	34.0	10.2	10	A
Endrin	ND		ug/kg	7.57	3.10	10	A
Endrin ketone	ND		ug/kg	18.2	4.68	10	A
Dieldrin	ND		ug/kg	11.4	5.68	10	A
4,4'-DDE	ND		ug/kg	18.2	4.20	10	A
4,4'-DDD	ND		ug/kg	18.2	6.48	10	A
4,4'-DDT	ND		ug/kg	34.0	14.6	10	A
Endosulfan I	ND		ug/kg	18.2	4.29	10	A
Endosulfan II	ND		ug/kg	18.2	6.07	10	A
Endosulfan sulfate	ND		ug/kg	7.57	3.60	10	A
Methoxychlor	ND		ug/kg	34.0	10.6	10	A
Toxaphene	ND		ug/kg	340	95.4	10	A
cis-Chlordane	ND		ug/kg	22.7	6.33	10	A
trans-Chlordane	ND		ug/kg	22.7	5.99	10	A
Chlordane	ND		ug/kg	148	60.2	10	A

Surrogate	% Recovery	Qualifier	Acceptance Criteria	Column
2,4,5,6-Tetrachloro-m-xylene	82		30-150	B
Decachlorobiphenyl	79		30-150	B
2,4,5,6-Tetrachloro-m-xylene	**3710**	Q	30-150	A
Decachlorobiphenyl	62		30-150	A

Project Name: MCGUINNESS BOULEVARD **Lab Number:** L1428173

Project Number: Not Specified **Report Date:** 12/02/14

SAMPLE RESULTS

Lab ID:	L1428173-06	Date Collected:	11/20/14 13:20
Client ID:	VHB SB-5 (0-2')	Date Received:	11/21/14
Sample Location:	209-235 MCGUINESS BLVD.	Field Prep:	Not Specified
Matrix:	Soil	Extraction Method:	EPA 3546
Analytical Method:	1,8081B	Extraction Date:	11/23/14 15:38
Analytical Date:	11/25/14 17:53	Cleanup Method:	EPA 3620B
Analyst:	SS	Cleanup Date:	11/25/14
Percent Solids:	85%		

Parameter	Result	Qualifier	Units	RL	MDL	Dilution Factor	Column
Organochlorine Pesticides by GC - Westborough Lab							
Delta-BHC	ND		ug/kg	1.85	0.362	1	A
Lindane	ND		ug/kg	0.771	0.345	1	A
Alpha-BHC	ND		ug/kg	0.771	0.219	1	A
Beta-BHC	ND		ug/kg	1.85	0.702	1	A
Heptachlor	ND		ug/kg	0.926	0.415	1	A
Aldrin	ND		ug/kg	1.85	0.652	1	A
Heptachlor epoxide	ND		ug/kg	3.47	1.04	1	A
Endrin	ND		ug/kg	0.771	0.316	1	A
Endrin ketone	ND		ug/kg	1.85	0.477	1	A
Dieldrin	ND		ug/kg	1.16	0.578	1	A
4,4'-DDE	13.8		ug/kg	1.85	0.428	1	B
4,4'-DDD	ND		ug/kg	1.85	0.660	1	A
4,4'-DDT	ND		ug/kg	3.47	1.49	1	A
Endosulfan I	ND		ug/kg	1.85	0.437	1	A
Endosulfan II	ND		ug/kg	1.85	0.619	1	A
Endosulfan sulfate	ND		ug/kg	0.771	0.367	1	A
Methoxychlor	ND		ug/kg	3.47	1.08	1	A
Toxaphene	ND		ug/kg	34.7	9.72	1	A
cis-Chlordane	ND		ug/kg	2.31	0.645	1	A
trans-Chlordane	ND		ug/kg	2.31	0.611	1	A
Chlordane	ND		ug/kg	15.0	6.13	1	A

Surrogate	% Recovery	Qualifier	Acceptance Criteria	Column
2,4,5,6-Tetrachloro-m-xylene	92		30-150	B
Decachlorobiphenyl	98		30-150	B
2,4,5,6-Tetrachloro-m-xylene	70		30-150	A
Decachlorobiphenyl	61		30-150	A

Project Name: MCGUINNESS BOULEVARD **Lab Number:** L1428173

Project Number: Not Specified **Report Date:** 12/02/14

SAMPLE RESULTS

Lab ID:	L1428173-07	Date Collected:	11/20/14 13:45
Client ID:	VHB SB-5 (14-16')	Date Received:	11/21/14
Sample Location:	209-235 MCGUINESS BLVD.	Field Prep:	Not Specified
Matrix:	Soil	Extraction Method:	EPA 3546
Analytical Method:	1,8081B	Extraction Date:	11/23/14 15:38
Analytical Date:	11/25/14 18:09	Cleanup Method:	EPA 3620B
Analyst:	SS	Cleanup Date:	11/25/14
Percent Solids:	67%		

Parameter	Result	Qualifier	Units	RL	MDL	Dilution Factor	Column
Organochlorine Pesticides by GC - Westborough Lab							
Delta-BHC	ND		ug/kg	2.34	0.458	1	A
Lindane	ND		ug/kg	0.973	0.435	1	A
Alpha-BHC	ND		ug/kg	0.973	0.276	1	A
Beta-BHC	ND		ug/kg	2.34	0.886	1	A
Heptachlor	ND		ug/kg	1.17	0.524	1	A
Aldrin	ND		ug/kg	2.34	0.822	1	A
Heptachlor epoxide	ND		ug/kg	4.38	1.31	1	A
Endrin	ND		ug/kg	0.973	0.399	1	A
Endrin ketone	ND		ug/kg	2.34	0.602	1	A
Dieldrin	ND		ug/kg	1.46	0.730	1	A
4,4'-DDE	ND		ug/kg	2.34	0.540	1	A
4,4'-DDD	ND		ug/kg	2.34	0.833	1	A
4,4'-DDT	ND		ug/kg	4.38	1.88	1	A
Endosulfan I	ND		ug/kg	2.34	0.552	1	A
Endosulfan II	ND		ug/kg	2.34	0.781	1	A
Endosulfan sulfate	ND		ug/kg	0.973	0.463	1	A
Methoxychlor	ND		ug/kg	4.38	1.36	1	A
Toxaphene	ND		ug/kg	43.8	12.3	1	A
cis-Chlordane	ND		ug/kg	2.92	0.814	1	A
trans-Chlordane	ND		ug/kg	2.92	0.771	1	A
Chlordane	ND		ug/kg	19.0	7.74	1	A

Surrogate	% Recovery	Qualifier	Acceptance Criteria	Column
2,4,5,6-Tetrachloro-m-xylene	103		30-150	B
Decachlorobiphenyl	95		30-150	B
2,4,5,6-Tetrachloro-m-xylene	89		30-150	A
Decachlorobiphenyl	62		30-150	A

Project Name: MCGUINNESS BOULEVARD **Lab Number:** L1428173

Project Number: Not Specified **Report Date:** 12/02/14

SAMPLE RESULTS

Lab ID:	L1428173-08	Date Collected:	11/20/14 13:50
Client ID:	VHB GW-1	Date Received:	11/21/14
Sample Location:	209-235 MCGUINESS BLVD.	Field Prep:	Not Specified
Matrix:	Water	Extraction Method:	EPA 3510C
Analytical Method:	1,8081B	Extraction Date:	11/24/14 16:24
Analytical Date:	11/25/14 13:15	Cleanup Method:	EPA 3620B
Analyst:	SS	Cleanup Date:	11/25/14

Parameter	Result	Qualifier	Units	RL	MDL	Dilution Factor	Column
Organochlorine Pesticides by GC - Westborough Lab							
Delta-BHC	ND		ug/l	0.020	0.005	1	A
Lindane	ND		ug/l	0.020	0.004	1	A
Alpha-BHC	ND		ug/l	0.020	0.004	1	A
Beta-BHC	ND		ug/l	0.020	0.006	1	A
Heptachlor	ND		ug/l	0.020	0.003	1	A
Aldrin	ND		ug/l	0.020	0.002	1	A
Heptachlor epoxide	ND		ug/l	0.020	0.004	1	A
Endrin	ND		ug/l	0.040	0.004	1	A
Endrin ketone	ND		ug/l	0.040	0.005	1	A
Dieldrin	ND		ug/l	0.040	0.004	1	A
4,4'-DDE	ND		ug/l	0.040	0.004	1	A
4,4'-DDD	ND		ug/l	0.040	0.005	1	A
4,4'-DDT	ND		ug/l	0.040	0.004	1	A
Endosulfan I	ND		ug/l	0.020	0.003	1	A
Endosulfan II	ND		ug/l	0.040	0.005	1	A
Endosulfan sulfate	ND		ug/l	0.040	0.005	1	A
Methoxychlor	ND		ug/l	0.200	0.007	1	A
Toxaphene	ND		ug/l	0.200	0.063	1	A
cis-Chlordane	ND		ug/l	0.020	0.007	1	A
trans-Chlordane	ND		ug/l	0.020	0.006	1	A
Chlordane	ND		ug/l	0.200	0.046	1	A

Surrogate	% Recovery	Qualifier	Acceptance Criteria	Column
2,4,5,6-Tetrachloro-m-xylene	75		30-150	A
Decachlorobiphenyl	73		30-150	A
2,4,5,6-Tetrachloro-m-xylene	70		30-150	B
Decachlorobiphenyl	74		30-150	B

Project Name: MCGUINNESS BOULEVARD **Lab Number:** L1428173

Project Number: Not Specified **Report Date:** 12/02/14

SAMPLE RESULTS

Lab ID:	L1428173-09	Date Collected:	11/20/14 14:40
Client ID:	VHB SB-3 (0-2')	Date Received:	11/21/14
Sample Location:	209-235 MCGUINESS BLVD.	Field Prep:	Not Specified
Matrix:	Soil	Extraction Method:	EPA 3546
Analytical Method:	1,8081B	Extraction Date:	11/23/14 15:38
Analytical Date:	11/25/14 18:25	Cleanup Method:	EPA 3620B
Analyst:	SS	Cleanup Date:	11/25/14
Percent Solids:	85%		

Parameter	Result	Qualifier	Units	RL	MDL	Dilution Factor	Column
Organochlorine Pesticides by GC - Westborough Lab							
Delta-BHC	ND		ug/kg	1.82	0.357	1	A
Lindane	ND		ug/kg	0.760	0.340	1	A
Alpha-BHC	ND		ug/kg	0.760	0.216	1	A
Beta-BHC	ND		ug/kg	1.82	0.692	1	A
Heptachlor	ND		ug/kg	0.912	0.409	1	A
Aldrin	ND		ug/kg	1.82	0.642	1	A
Heptachlor epoxide	ND		ug/kg	3.42	1.03	1	A
Endrin	ND		ug/kg	0.760	0.312	1	A
Endrin ketone	ND		ug/kg	1.82	0.470	1	A
Dieldrin	ND		ug/kg	1.14	0.570	1	A
4,4'-DDE	ND		ug/kg	1.82	0.422	1	A
4,4'-DDD	ND		ug/kg	1.82	0.651	1	A
4,4'-DDT	ND		ug/kg	3.42	1.47	1	A
Endosulfan I	ND		ug/kg	1.82	0.431	1	A
Endosulfan II	ND		ug/kg	1.82	0.610	1	A
Endosulfan sulfate	ND		ug/kg	0.760	0.362	1	A
Methoxychlor	ND		ug/kg	3.42	1.06	1	A
Toxaphene	ND		ug/kg	34.2	9.58	1	A
cis-Chlordane	ND		ug/kg	2.28	0.636	1	A
trans-Chlordane	ND		ug/kg	2.28	0.602	1	A
Chlordane	ND		ug/kg	14.8	6.04	1	A

Surrogate	% Recovery	Qualifier	Acceptance Criteria	Column
2,4,5,6-Tetrachloro-m-xylene	67		30-150	B
Decachlorobiphenyl	**208**	Q	30-150	B
2,4,5,6-Tetrachloro-m-xylene	69		30-150	A
Decachlorobiphenyl	80		30-150	A

Project Name: MCGUINNESS BOULEVARD **Lab Number:** L1428173

Project Number: Not Specified **Report Date:** 12/02/14

SAMPLE RESULTS

Lab ID:	L1428173-10	Date Collected:	11/20/14 14:55
Client ID:	VHB SB-3 (14-16')	Date Received:	11/21/14
Sample Location:	209-235 MCGUINESS BLVD.	Field Prep:	Not Specified
Matrix:	Soil	Extraction Method:	EPA 3546
Analytical Method:	1,8081B	Extraction Date:	11/23/14 15:38
Analytical Date:	11/25/14 18:41	Cleanup Method:	EPA 3620B
Analyst:	SS	Cleanup Date:	11/25/14
Percent Solids:	86%		

Parameter	Result	Qualifier	Units	RL	MDL	Dilution Factor	Column
Organochlorine Pesticides by GC - Westborough Lab							
Delta-BHC	ND		ug/kg	1.79	0.350	1	A
Lindane	ND		ug/kg	0.746	0.333	1	A
Alpha-BHC	ND		ug/kg	0.746	0.212	1	A
Beta-BHC	ND		ug/kg	1.79	0.679	1	A
Heptachlor	ND		ug/kg	0.895	0.401	1	A
Aldrin	ND		ug/kg	1.79	0.630	1	A
Heptachlor epoxide	ND		ug/kg	3.36	1.01	1	A
Endrin	ND		ug/kg	0.746	0.306	1	A
Endrin ketone	ND		ug/kg	1.79	0.461	1	A
Dieldrin	ND		ug/kg	1.12	0.559	1	A
4,4'-DDE	ND		ug/kg	1.79	0.414	1	A
4,4'-DDD	ND		ug/kg	1.79	0.638	1	A
4,4'-DDT	ND		ug/kg	3.36	1.44	1	A
Endosulfan I	ND		ug/kg	1.79	0.423	1	A
Endosulfan II	ND		ug/kg	1.79	0.598	1	A
Endosulfan sulfate	ND		ug/kg	0.746	0.355	1	A
Methoxychlor	ND		ug/kg	3.36	1.04	1	A
Toxaphene	ND		ug/kg	33.6	9.40	1	A
cis-Chlordane	ND		ug/kg	2.24	0.623	1	A
trans-Chlordane	ND		ug/kg	2.24	0.591	1	A
Chlordane	ND		ug/kg	14.5	5.93	1	A

Surrogate	% Recovery	Qualifier	Acceptance Criteria	Column
2,4,5,6-Tetrachloro-m-xylene	81		30-150	B
Decachlorobiphenyl	90		30-150	B
2,4,5,6-Tetrachloro-m-xylene	80		30-150	A
Decachlorobiphenyl	117		30-150	A

Project Name: MCGUINNESS BOULEVARD **Lab Number:** L1428173

Project Number: Not Specified **Report Date:** 12/02/14

SAMPLE RESULTS

Lab ID:	L1428173-11	Date Collected:	11/20/14 15:20
Client ID:	VHB SB-2 (0-2')	Date Received:	11/21/14
Sample Location:	209-235 MCGUINESS BLVD.	Field Prep:	Not Specified
Matrix:	Soil	Extraction Method:	EPA 3546
Analytical Method:	1,8081B	Extraction Date:	11/23/14 15:38
Analytical Date:	11/25/14 18:57	Cleanup Method:	EPA 3620B
Analyst:	SS	Cleanup Date:	11/25/14
Percent Solids:	89%		

Parameter	Result	Qualifier	Units	RL	MDL	Dilution Factor	Column
Organochlorine Pesticides by GC - Westborough Lab							
Delta-BHC	ND		ug/kg	1.77	0.346	1	A
Lindane	ND		ug/kg	0.737	0.330	1	A
Alpha-BHC	ND		ug/kg	0.737	0.209	1	A
Beta-BHC	ND		ug/kg	1.77	0.671	1	A
Heptachlor	ND		ug/kg	0.885	0.397	1	A
Aldrin	ND		ug/kg	1.77	0.623	1	A
Heptachlor epoxide	ND		ug/kg	3.32	0.996	1	A
Endrin	ND		ug/kg	0.737	0.302	1	A
Endrin ketone	ND		ug/kg	1.77	0.456	1	A
Dieldrin	ND		ug/kg	1.11	0.553	1	A
4,4'-DDE	ND		ug/kg	1.77	0.409	1	A
4,4'-DDD	ND		ug/kg	1.77	0.631	1	A
4,4'-DDT	ND		ug/kg	3.32	1.42	1	A
Endosulfan I	ND		ug/kg	1.77	0.418	1	A
Endosulfan II	ND		ug/kg	1.77	0.591	1	A
Endosulfan sulfate	ND		ug/kg	0.737	0.351	1	A
Methoxychlor	ND		ug/kg	3.32	1.03	1	A
Toxaphene	ND		ug/kg	33.2	9.29	1	A
cis-Chlordane	ND		ug/kg	2.21	0.616	1	A
trans-Chlordane	ND		ug/kg	2.21	0.584	1	A
Chlordane	ND		ug/kg	14.4	5.86	1	A

Surrogate	% Recovery	Qualifier	Acceptance Criteria	Column
2,4,5,6-Tetrachloro-m-xylene	72		30-150	B
Decachlorobiphenyl	80		30-150	B
2,4,5,6-Tetrachloro-m-xylene	77		30-150	A
Decachlorobiphenyl	88		30-150	A

Project Name: MCGUINNESS BOULEVARD **Lab Number:** L1428173

Project Number: Not Specified **Report Date:** 12/02/14

SAMPLE RESULTS

Lab ID:	L1428173-12	Date Collected:	11/20/14 15:40
Client ID:	VHB SB-2 (14-16')	Date Received:	11/21/14
Sample Location:	209-235 MCGUINESS BLVD.	Field Prep:	Not Specified
Matrix:	Soil	Extraction Method:	EPA 3546
Analytical Method:	1,8081B	Extraction Date:	11/23/14 15:38
Analytical Date:	11/25/14 19:13	Cleanup Method:	EPA 3620B
Analyst:	SS	Cleanup Date:	11/25/14
Percent Solids:	84%		

Parameter	Result	Qualifier	Units	RL	MDL	Dilution Factor	Column
Organochlorine Pesticides by GC - Westborough Lab							
Delta-BHC	ND		ug/kg	1.86	0.364	1	A
Lindane	ND		ug/kg	0.775	0.346	1	A
Alpha-BHC	ND		ug/kg	0.775	0.220	1	A
Beta-BHC	ND		ug/kg	1.86	0.705	1	A
Heptachlor	ND		ug/kg	0.930	0.417	1	A
Aldrin	ND		ug/kg	1.86	0.655	1	A
Heptachlor epoxide	ND		ug/kg	3.49	1.05	1	A
Endrin	ND		ug/kg	0.775	0.318	1	A
Endrin ketone	ND		ug/kg	1.86	0.479	1	A
Dieldrin	ND		ug/kg	1.16	0.581	1	A
4,4'-DDE	ND		ug/kg	1.86	0.430	1	A
4,4'-DDD	ND		ug/kg	1.86	0.663	1	A
4,4'-DDT	ND		ug/kg	3.49	1.50	1	A
Endosulfan I	ND		ug/kg	1.86	0.439	1	A
Endosulfan II	ND		ug/kg	1.86	0.622	1	A
Endosulfan sulfate	ND		ug/kg	0.775	0.369	1	A
Methoxychlor	ND		ug/kg	3.49	1.08	1	A
Toxaphene	ND		ug/kg	34.9	9.76	1	A
cis-Chlordane	ND		ug/kg	2.32	0.648	1	A
trans-Chlordane	ND		ug/kg	2.32	0.614	1	A
Chlordane	ND		ug/kg	15.1	6.16	1	A

Surrogate	% Recovery	Qualifier	Acceptance Criteria	Column
2,4,5,6-Tetrachloro-m-xylene	62		30-150	B
Decachlorobiphenyl	46		30-150	B
2,4,5,6-Tetrachloro-m-xylene	68		30-150	A
Decachlorobiphenyl	57		30-150	A

Project Name: MCGUINNESS BOULEVARD
Project Number: Not Specified

Lab Number: L1428173
Report Date: 12/02/14

Method Blank Analysis
Batch Quality Control

Analytical Method: 1,8081B
Analytical Date: 11/25/14 15:44
Analyst: SS

Extraction Method: EPA 3546
Extraction Date: 11/23/14 15:38
Cleanup Method: EPA 3620B
Cleanup Date: 11/25/14

Parameter	Result	Qualifier	Units	RL	MDL	Column
Organochlorine Pesticides by GC - Westborough Lab for sample(s): 01-07,09-12 Batch: WG743135-1						
Delta-BHC	ND		ug/kg	1.54	0.301	A
Lindane	ND		ug/kg	0.641	0.286	A
Alpha-BHC	ND		ug/kg	0.641	0.182	A
Beta-BHC	ND		ug/kg	1.54	0.583	A
Heptachlor	ND		ug/kg	0.769	0.345	A
Aldrin	ND		ug/kg	1.54	0.542	A
Heptachlor epoxide	ND		ug/kg	2.88	0.865	A
Endrin	ND		ug/kg	0.641	0.263	A
Endrin ketone	ND		ug/kg	1.54	0.396	A
Dieldrin	ND		ug/kg	0.962	0.481	A
4,4'-DDE	ND		ug/kg	1.54	0.356	A
4,4'-DDD	ND		ug/kg	1.54	0.549	A
4,4'-DDT	ND		ug/kg	2.88	1.24	A
Endosulfan I	ND		ug/kg	1.54	0.363	A
Endosulfan II	ND		ug/kg	1.54	0.514	A
Endosulfan sulfate	ND		ug/kg	0.641	0.305	A
Methoxychlor	ND		ug/kg	2.88	0.897	A
Toxaphene	ND		ug/kg	28.8	8.08	A
cis-Chlordane	ND		ug/kg	1.92	0.536	A
trans-Chlordane	ND		ug/kg	1.92	0.508	A
Chlordane	ND		ug/kg	12.5	5.10	A

Project Name: MCGUINNESS BOULEVARD
Project Number: Not Specified

Lab Number: L1428173
Report Date: 12/02/14

Method Blank Analysis
Batch Quality Control

Analytical Method: 1,8081B
Analytical Date: 11/25/14 15:44
Analyst: SS

Extraction Method: EPA 3546
Extraction Date: 11/23/14 15:38
Cleanup Method: EPA 3620B
Cleanup Date: 11/25/14

Parameter	Result	Qualifier	Units	RL	MDL
Organochlorine Pesticides by GC - Westborough Lab for sample(s): 01-07,09-12 Batch: WG743135-1					

Surrogate	%Recovery	Qualifier	Acceptance Criteria	Column
2,4,5,6-Tetrachloro-m-xylene	79		30-150	B
Decachlorobiphenyl	78		30-150	B
2,4,5,6-Tetrachloro-m-xylene	77		30-150	A
Decachlorobiphenyl	72		30-150	A

Project Name: MCGUINNESS BOULEVARD
Project Number: Not Specified

Lab Number: L1428173
Report Date: 12/02/14

Method Blank Analysis
Batch Quality Control

Analytical Method: 1,8081B
Analytical Date: 11/25/14 12:37
Analyst: SS

Extraction Method: EPA 3510C
Extraction Date: 11/24/14 16:24
Cleanup Method: EPA 3620B
Cleanup Date: 11/25/14

Parameter	Result	Qualifier	Units	RL	MDL	Column
Organochlorine Pesticides by GC - Westborough Lab for sample(s): 08 Batch: WG743445-1						
Delta-BHC	ND		ug/l	0.020	0.005	A
Lindane	ND		ug/l	0.020	0.004	A
Alpha-BHC	ND		ug/l	0.020	0.004	A
Beta-BHC	ND		ug/l	0.020	0.006	A
Heptachlor	ND		ug/l	0.020	0.003	A
Aldrin	ND		ug/l	0.020	0.002	A
Heptachlor epoxide	ND		ug/l	0.020	0.004	A
Endrin	ND		ug/l	0.040	0.004	A
Endrin ketone	ND		ug/l	0.040	0.005	A
Dieldrin	ND		ug/l	0.040	0.004	A
4,4'-DDE	ND		ug/l	0.040	0.004	A
4,4'-DDD	ND		ug/l	0.040	0.005	A
4,4'-DDT	ND		ug/l	0.040	0.004	A
Endosulfan I	ND		ug/l	0.020	0.003	A
Endosulfan II	ND		ug/l	0.040	0.005	A
Endosulfan sulfate	ND		ug/l	0.040	0.005	A
Methoxychlor	ND		ug/l	0.200	0.007	A
Toxaphene	ND		ug/l	0.200	0.063	A
cis-Chlordane	ND		ug/l	0.020	0.007	A
trans-Chlordane	ND		ug/l	0.020	0.006	A
Chlordane	ND		ug/l	0.200	0.046	A

Surrogate	%Recovery	Qualifier	Acceptance Criteria	Column
2,4,5,6-Tetrachloro-m-xylene	87		30-150	A
Decachlorobiphenyl	82		30-150	A
2,4,5,6-Tetrachloro-m-xylene	86		30-150	B
Decachlorobiphenyl	93		30-150	B

Lab Control Sample Analysis
Batch Quality Control

Project Name: MCGUINNESS BOULEVARD
Project Number: Not Specified

Lab Number: L1428173
Report Date: 12/02/14

Parameter	LCS %Recovery	Qual	LCSD %Recovery	Qual	%Recovery Limits	RPD	Qual	RPD Limits	Column
Organochlorine Pesticides by GC - Westborough Lab Associated sample(s): 01-07,09-12 Batch: WG743135-2 WG743135-3									
Delta-BHC	79		71		30-150	11		30	A
Lindane	82		81		30-150	1		30	A
Alpha-BHC	92		91		30-150	1		30	A
Beta-BHC	90		82		30-150	9		30	A
Heptachlor	80		79		30-150	1		30	A
Aldrin	84		84		30-150	0		30	A
Heptachlor epoxide	79		79		30-150	0		30	A
Endrin	91		90		30-150	1		30	A
Endrin ketone	78		78		30-150	0		30	A
Dieldrin	85		85		30-150	0		30	A
4,4'-DDE	83		82		30-150	1		30	A
4,4'-DDD	82		81		30-150	1		30	A
4,4'-DDT	85		84		30-150	1		30	A
Endosulfan I	77		77		30-150	0		30	A
Endosulfan II	75		75		30-150	0		30	A
Endosulfan sulfate	78		78		30-150	0		30	A
Methoxychlor	89		93		30-150	4		30	A
cis-Chlordane	79		79		30-150	0		30	A
trans-Chlordane	83		84		30-150	1		30	A

Lab Control Sample Analysis

Batch Quality Control

Project Name: MCGUINNESS BOULEVARD

Project Number: Not Specified

Lab Number: L1428173

Report Date: 12/02/14

Parameter	LCS %Recovery	Qual	LCSD %Recovery	Qual	%Recovery Limits	RPD	Qual	RPD Limits
Organochlorine Pesticides by GC - Westborough Lab Associated sample(s): 01-07,09-12 Batch: WG743135-2 WG743135-3								

Surrogate	LCS %Recovery	Qual	LCSD %Recovery	Qual	Acceptance Criteria	Column
2,4,5,6-Tetrachloro-m-xylene	75		73		30-150	B
Decachlorobiphenyl	75		74		30-150	B
2,4,5,6-Tetrachloro-m-xylene	77		77		30-150	A
Decachlorobiphenyl	69		71		30-150	A

Lab Control Sample Analysis
Batch Quality Control

Project Name: MCGUINNESS BOULEVARD
Project Number: Not Specified

Lab Number: L1428173
Report Date: 12/02/14

Parameter	LCS %Recovery	Qual	LCSD %Recovery	Qual	%Recovery Limits	RPD	Qual	RPD Limits	Column
Organochlorine Pesticides by GC - Westborough Lab Associated sample(s): 08 Batch: WG743445-2 WG743445-3									
Delta-BHC	76		83		30-150	10		20	A
Lindane	94		104		30-150	10		20	A
Alpha-BHC	85		93		30-150	9		20	A
Beta-BHC	95		107		30-150	11		20	A
Heptachlor	85		98		30-150	14		20	A
Aldrin	79		92		30-150	15		20	A
Heptachlor epoxide	86		97		30-150	12		20	A
Endrin	94		108		30-150	13		20	A
Endrin ketone	72		81		30-150	12		20	A
Dieldrin	91		103		30-150	12		20	A
4,4'-DDE	84		95		30-150	12		20	A
4,4'-DDD	89		100		30-150	12		20	A
4,4'-DDT	85		98		30-150	14		20	A
Endosulfan I	89		117		30-150	**27**	Q	20	A
Endosulfan II	77		86		30-150	10		20	A
Endosulfan sulfate	76		84		30-150	11		20	A
Methoxychlor	75		85		30-150	13		20	A
cis-Chlordane	81		91		30-150	12		20	A
trans-Chlordane	85		99		30-150	14		20	A

Lab Control Sample Analysis

Batch Quality Control

Project Name: MCGUINNESS BOULEVARD

Project Number: Not Specified

Lab Number: L1428173

Report Date: 12/02/14

Parameter	LCS %Recovery	Qual	LCSD %Recovery	Qual	%Recovery Limits	RPD	Qual	RPD Limits
Organochlorine Pesticides by GC - Westborough Lab Associated sample(s): 08 Batch: WG743445-2 WG743445-3								

Surrogate	LCS %Recovery	Qual	LCSD %Recovery	Qual	Acceptance Criteria	Column
2,4,5,6-Tetrachloro-m-xylene	73		82		30-150	A
Decachlorobiphenyl	69		76		30-150	A
2,4,5,6-Tetrachloro-m-xylene	75		89		30-150	B
Decachlorobiphenyl	79		98		30-150	B

METALS

Project Name:	MCGUINNESS BOULEVARD	**Lab Number:**	L1428173
Project Number:	Not Specified	**Report Date:**	12/02/14

SAMPLE RESULTS

Lab ID:	L1428173-01	Date Collected:	11/20/14 10:00
Client ID:	VHB SB-4 (0-2')	Date Received:	11/21/14
Sample Location:	209-235 MCGUINESS BLVD.	Field Prep:	Not Specified
Matrix:	Soil		
Percent Solids:	86%		

Parameter	Result	Qualifier	Units	RL	MDL	Dilution Factor	Date Prepared	Date Analyzed	Prep Method	Analytical Method	Analyst
Total Metals - Westborough Lab											
Aluminum, Total	7500		mg/kg	9.1	1.8	2	11/24/14 20:11	11/25/14 21:33	EPA 3050B	1,6010C	TT
Antimony, Total	1.6	J	mg/kg	4.6	0.73	2	11/24/14 20:11	11/25/14 21:33	EPA 3050B	1,6010C	TT
Arsenic, Total	6.9		mg/kg	0.91	0.18	2	11/24/14 20:11	11/25/14 21:33	EPA 3050B	1,6010C	TT
Barium, Total	180		mg/kg	0.91	0.27	2	11/24/14 20:11	11/25/14 21:33	EPA 3050B	1,6010C	TT
Beryllium, Total	0.37	J	mg/kg	0.46	0.09	2	11/24/14 20:11	11/25/14 21:33	EPA 3050B	1,6010C	TT
Cadmium, Total	ND		mg/kg	0.91	0.06	2	11/24/14 20:11	11/25/14 21:33	EPA 3050B	1,6010C	TT
Calcium, Total	1500		mg/kg	9.1	2.7	2	11/24/14 20:11	11/25/14 21:33	EPA 3050B	1,6010C	TT
Chromium, Total	14		mg/kg	0.91	0.18	2	11/24/14 20:11	11/25/14 21:33	EPA 3050B	1,6010C	TT
Cobalt, Total	7.3		mg/kg	1.8	0.46	2	11/24/14 20:11	11/25/14 21:33	EPA 3050B	1,6010C	TT
Copper, Total	30		mg/kg	0.91	0.18	2	11/24/14 20:11	11/25/14 21:33	EPA 3050B	1,6010C	TT
Iron, Total	15000		mg/kg	4.6	1.8	2	11/24/14 20:11	11/25/14 21:33	EPA 3050B	1,6010C	TT
Lead, Total	280		mg/kg	4.6	0.18	2	11/24/14 20:11	11/25/14 21:33	EPA 3050B	1,6010C	TT
Magnesium, Total	1500		mg/kg	9.1	0.91	2	11/24/14 20:11	11/25/14 21:33	EPA 3050B	1,6010C	TT
Manganese, Total	320		mg/kg	0.91	0.18	2	11/24/14 20:11	11/25/14 21:33	EPA 3050B	1,6010C	TT
Mercury, Total	0.38		mg/kg	0.08	0.02	1	11/22/14 11:40	11/24/14 17:08	EPA 7471B	1,7471B	MC
Nickel, Total	10		mg/kg	2.3	0.36	2	11/24/14 20:11	11/25/14 21:33	EPA 3050B	1,6010C	TT
Potassium, Total	520		mg/kg	230	36.	2	11/24/14 20:11	11/25/14 21:33	EPA 3050B	1,6010C	TT
Selenium, Total	ND		mg/kg	1.8	0.27	2	11/24/14 20:11	11/25/14 21:33	EPA 3050B	1,6010C	TT
Silver, Total	ND		mg/kg	0.91	0.18	2	11/24/14 20:11	11/25/14 21:33	EPA 3050B	1,6010C	TT
Sodium, Total	67	J	mg/kg	180	27.	2	11/24/14 20:11	11/25/14 21:33	EPA 3050B	1,6010C	TT
Thallium, Total	ND		mg/kg	1.8	0.36	2	11/24/14 20:11	11/25/14 21:33	EPA 3050B	1,6010C	TT
Vanadium, Total	18		mg/kg	0.91	0.09	2	11/24/14 20:11	11/25/14 21:33	EPA 3050B	1,6010C	TT
Zinc, Total	140		mg/kg	4.6	0.64	2	11/24/14 20:11	11/25/14 21:33	EPA 3050B	1,6010C	TT

Project Name: MCGUINNESS BOULEVARD **Lab Number:** L1428173

Project Number: Not Specified **Report Date:** 12/02/14

SAMPLE RESULTS

Lab ID: L1428173-02 Date Collected: 11/20/14 10:25

Client ID: VHB SB-4 (14-16') Date Received: 11/21/14

Sample Location: 209-235 MCGUINESS BLVD. Field Prep: Not Specified

Matrix: Soil

Percent Solids: 85%

Parameter	Result	Qualifier	Units	RL	MDL	Dilution Factor	Date Prepared	Date Analyzed	Prep Method	Analytical Method	Analyst
Total Metals - Westborough Lab											
Aluminum, Total	4800		mg/kg	9.1	1.8	2	11/24/14 20:11	11/25/14 21:48	EPA 3050B	1,6010C	TT
Antimony, Total	ND		mg/kg	4.5	0.72	2	11/24/14 20:11	11/25/14 21:48	EPA 3050B	1,6010C	TT
Arsenic, Total	4.8		mg/kg	0.91	0.18	2	11/24/14 20:11	11/25/14 21:48	EPA 3050B	1,6010C	TT
Barium, Total	17		mg/kg	0.91	0.27	2	11/24/14 20:11	11/25/14 21:48	EPA 3050B	1,6010C	TT
Beryllium, Total	0.22	J	mg/kg	0.45	0.09	2	11/24/14 20:11	11/25/14 21:48	EPA 3050B	1,6010C	TT
Cadmium, Total	ND		mg/kg	0.91	0.06	2	11/24/14 20:11	11/25/14 21:48	EPA 3050B	1,6010C	TT
Calcium, Total	220		mg/kg	9.1	2.7	2	11/24/14 20:11	11/25/14 21:48	EPA 3050B	1,6010C	TT
Chromium, Total	8.0		mg/kg	0.91	0.18	2	11/24/14 20:11	11/25/14 21:48	EPA 3050B	1,6010C	TT
Cobalt, Total	5.0		mg/kg	1.8	0.45	2	11/24/14 20:11	11/25/14 21:48	EPA 3050B	1,6010C	TT
Copper, Total	7.1		mg/kg	0.91	0.18	2	11/24/14 20:11	11/25/14 21:48	EPA 3050B	1,6010C	TT
Iron, Total	12000		mg/kg	4.5	1.8	2	11/24/14 20:11	11/25/14 21:48	EPA 3050B	1,6010C	TT
Lead, Total	3.7	J	mg/kg	4.5	0.18	2	11/24/14 20:11	11/25/14 21:48	EPA 3050B	1,6010C	TT
Magnesium, Total	1600		mg/kg	9.1	0.91	2	11/24/14 20:11	11/25/14 21:48	EPA 3050B	1,6010C	TT
Manganese, Total	120		mg/kg	0.91	0.18	2	11/24/14 20:11	11/25/14 21:48	EPA 3050B	1,6010C	TT
Mercury, Total	ND		mg/kg	0.08	0.02	1	11/22/14 11:40	11/24/14 17:15	EPA 7471B	1,7471B	MC
Nickel, Total	9.2		mg/kg	2.3	0.36	2	11/24/14 20:11	11/25/14 21:48	EPA 3050B	1,6010C	TT
Potassium, Total	430		mg/kg	230	36.	2	11/24/14 20:11	11/25/14 21:48	EPA 3050B	1,6010C	TT
Selenium, Total	ND		mg/kg	1.8	0.27	2	11/24/14 20:11	11/25/14 21:48	EPA 3050B	1,6010C	TT
Silver, Total	ND		mg/kg	0.91	0.18	2	11/24/14 20:11	11/25/14 21:48	EPA 3050B	1,6010C	TT
Sodium, Total	ND		mg/kg	180	27.	2	11/24/14 20:11	11/25/14 21:48	EPA 3050B	1,6010C	TT
Thallium, Total	ND		mg/kg	1.8	0.36	2	11/24/14 20:11	11/25/14 21:48	EPA 3050B	1,6010C	TT
Vanadium, Total	11		mg/kg	0.91	0.09	2	11/24/14 20:11	11/25/14 21:48	EPA 3050B	1,6010C	TT
Zinc, Total	23		mg/kg	4.5	0.63	2	11/24/14 20:11	11/25/14 21:48	EPA 3050B	1,6010C	TT

Project Name:	MCGUINNESS BOULEVARD	**Lab Number:**	L1428173
Project Number:	Not Specified	**Report Date:**	12/02/14

SAMPLE RESULTS

Lab ID:	L1428173-03	Date Collected:	11/20/14 11:15
Client ID:	VHB SB-1 (0-2')	Date Received:	11/21/14
Sample Location:	209-235 MCGUINESS BLVD.	Field Prep:	Not Specified
Matrix:	Soil		
Percent Solids:	88%		

Parameter	Result	Qualifier	Units	RL	MDL	Dilution Factor	Date Prepared	Date Analyzed	Prep Method	Analytical Method	Analyst
Total Metals - Westborough Lab											
Aluminum, Total	1700		mg/kg	8.7	1.7	2	11/24/14 20:11	11/25/14 22:11	EPA 3050B	1,6010C	TT
Antimony, Total	2.6	J	mg/kg	4.4	0.70	2	11/24/14 20:11	11/25/14 22:11	EPA 3050B	1,6010C	TT
Arsenic, Total	12		mg/kg	0.87	0.17	2	11/24/14 20:11	11/25/14 22:11	EPA 3050B	1,6010C	TT
Barium, Total	57		mg/kg	0.87	0.26	2	11/24/14 20:11	11/25/14 22:11	EPA 3050B	1,6010C	TT
Beryllium, Total	0.15	J	mg/kg	0.44	0.09	2	11/24/14 20:11	11/25/14 22:11	EPA 3050B	1,6010C	TT
Cadmium, Total	1.3		mg/kg	0.87	0.06	2	11/24/14 20:11	11/25/14 22:11	EPA 3050B	1,6010C	TT
Calcium, Total	1600		mg/kg	8.7	2.6	2	11/24/14 20:11	11/25/14 22:11	EPA 3050B	1,6010C	TT
Chromium, Total	8.9		mg/kg	0.87	0.17	2	11/24/14 20:11	11/25/14 22:11	EPA 3050B	1,6010C	TT
Cobalt, Total	3.7		mg/kg	1.7	0.44	2	11/24/14 20:11	11/25/14 22:11	EPA 3050B	1,6010C	TT
Copper, Total	980		mg/kg	0.87	0.17	2	11/24/14 20:11	11/25/14 22:11	EPA 3050B	1,6010C	TT
Iron, Total	11000		mg/kg	4.4	1.7	2	11/24/14 20:11	11/25/14 22:11	EPA 3050B	1,6010C	TT
Lead, Total	530		mg/kg	4.4	0.17	2	11/24/14 20:11	11/25/14 22:11	EPA 3050B	1,6010C	TT
Magnesium, Total	490		mg/kg	8.7	0.87	2	11/24/14 20:11	11/25/14 22:11	EPA 3050B	1,6010C	TT
Manganese, Total	76		mg/kg	0.87	0.17	2	11/24/14 20:11	11/25/14 22:11	EPA 3050B	1,6010C	TT
Mercury, Total	0.39		mg/kg	0.08	0.02	1	11/22/14 11:40	11/24/14 17:17	EPA 7471B	1,7471B	MC
Nickel, Total	5.9		mg/kg	2.2	0.35	2	11/24/14 20:11	11/25/14 22:11	EPA 3050B	1,6010C	TT
Potassium, Total	350		mg/kg	220	35.	2	11/24/14 20:11	11/25/14 22:11	EPA 3050B	1,6010C	TT
Selenium, Total	1.4	J	mg/kg	1.7	0.26	2	11/24/14 20:11	11/25/14 22:11	EPA 3050B	1,6010C	TT
Silver, Total	ND		mg/kg	0.87	0.17	2	11/24/14 20:11	11/25/14 22:11	EPA 3050B	1,6010C	TT
Sodium, Total	120	J	mg/kg	170	26.	2	11/24/14 20:11	11/25/14 22:11	EPA 3050B	1,6010C	TT
Thallium, Total	ND		mg/kg	1.7	0.35	2	11/24/14 20:11	11/25/14 22:11	EPA 3050B	1,6010C	TT
Vanadium, Total	13		mg/kg	0.87	0.09	2	11/24/14 20:11	11/25/14 22:11	EPA 3050B	1,6010C	TT
Zinc, Total	1000		mg/kg	4.4	0.61	2	11/24/14 20:11	11/25/14 22:11	EPA 3050B	1,6010C	TT

Project Name: MCGUINNESS BOULEVARD **Lab Number:** L1428173

Project Number: Not Specified **Report Date:** 12/02/14

SAMPLE RESULTS

Lab ID: L1428173-04 Date Collected: 11/20/14 11:40

Client ID: VHB SB-1 (14-16') Date Received: 11/21/14

Sample Location: 209-235 MCGUINESS BLVD. Field Prep: Not Specified

Matrix: Soil

Percent Solids: 86%

Parameter	Result	Qualifier	Units	RL	MDL	Dilution Factor	Date Prepared	Date Analyzed	Prep Method	Analytical Method	Analyst
Total Metals - Westborough Lab											
Aluminum, Total	9200		mg/kg	9.0	1.8	2	11/24/14 20:11	11/25/14 22:14	EPA 3050B	1,6010C	TT
Antimony, Total	ND		mg/kg	4.5	0.72	2	11/24/14 20:11	11/25/14 22:14	EPA 3050B	1,6010C	TT
Arsenic, Total	6.8		mg/kg	0.90	0.18	2	11/24/14 20:11	11/25/14 22:14	EPA 3050B	1,6010C	TT
Barium, Total	22		mg/kg	0.90	0.27	2	11/24/14 20:11	11/25/14 22:14	EPA 3050B	1,6010C	TT
Beryllium, Total	0.34	J	mg/kg	0.45	0.09	2	11/24/14 20:11	11/25/14 22:14	EPA 3050B	1,6010C	TT
Cadmium, Total	ND		mg/kg	0.90	0.06	2	11/24/14 20:11	11/25/14 22:14	EPA 3050B	1,6010C	TT
Calcium, Total	1300		mg/kg	9.0	2.7	2	11/24/14 20:11	11/25/14 22:14	EPA 3050B	1,6010C	TT
Chromium, Total	17		mg/kg	0.90	0.18	2	11/24/14 20:11	11/25/14 22:14	EPA 3050B	1,6010C	TT
Cobalt, Total	7.8		mg/kg	1.8	0.45	2	11/24/14 20:11	11/25/14 22:14	EPA 3050B	1,6010C	TT
Copper, Total	9.8		mg/kg	0.90	0.18	2	11/24/14 20:11	11/25/14 22:14	EPA 3050B	1,6010C	TT
Iron, Total	22000		mg/kg	4.5	1.8	2	11/24/14 20:11	11/25/14 22:14	EPA 3050B	1,6010C	TT
Lead, Total	5.8		mg/kg	4.5	0.18	2	11/24/14 20:11	11/25/14 22:14	EPA 3050B	1,6010C	TT
Magnesium, Total	2100		mg/kg	9.0	0.90	2	11/24/14 20:11	11/25/14 22:14	EPA 3050B	1,6010C	TT
Manganese, Total	150		mg/kg	0.90	0.18	2	11/24/14 20:11	11/25/14 22:14	EPA 3050B	1,6010C	TT
Mercury, Total	ND		mg/kg	0.07	0.02	1	11/22/14 11:40	11/24/14 17:19	EPA 7471B	1,7471B	MC
Nickel, Total	9.7		mg/kg	2.3	0.36	2	11/24/14 20:11	11/25/14 22:14	EPA 3050B	1,6010C	TT
Potassium, Total	720		mg/kg	230	36.	2	11/24/14 20:11	11/25/14 22:14	EPA 3050B	1,6010C	TT
Selenium, Total	ND		mg/kg	1.8	0.27	2	11/24/14 20:11	11/25/14 22:14	EPA 3050B	1,6010C	TT
Silver, Total	ND		mg/kg	0.90	0.18	2	11/24/14 20:11	11/25/14 22:14	EPA 3050B	1,6010C	TT
Sodium, Total	59	J	mg/kg	180	27.	2	11/24/14 20:11	11/25/14 22:14	EPA 3050B	1,6010C	TT
Thallium, Total	ND		mg/kg	1.8	0.36	2	11/24/14 20:11	11/25/14 22:14	EPA 3050B	1,6010C	TT
Vanadium, Total	20		mg/kg	0.90	0.09	2	11/24/14 20:11	11/25/14 22:14	EPA 3050B	1,6010C	TT
Zinc, Total	37		mg/kg	4.5	0.63	2	11/24/14 20:11	11/25/14 22:14	EPA 3050B	1,6010C	TT

Project Name: MCGUINNESS BOULEVARD **Lab Number:** L1428173

Project Number: Not Specified **Report Date:** 12/02/14

SAMPLE RESULTS

Lab ID: L1428173-05 Date Collected: 11/20/14 11:45

Client ID: VHB SB-1 (8-10') Date Received: 11/21/14

Sample Location: 209-235 MCGUINESS BLVD. Field Prep: Not Specified

Matrix: Soil

Percent Solids: 85%

Parameter	Result	Qualifier	Units	RL	MDL	Dilution Factor	Date Prepared	Date Analyzed	Prep Method	Analytical Method	Analyst
Total Metals - Westborough Lab											
Aluminum, Total	6300		mg/kg	9.3	1.8	2	11/24/14 20:11	11/25/14 22:18	EPA 3050B	1,6010C	TT
Antimony, Total	3.2	J	mg/kg	4.6	0.74	2	11/24/14 20:11	11/25/14 22:18	EPA 3050B	1,6010C	TT
Arsenic, Total	8.0		mg/kg	0.93	0.18	2	11/24/14 20:11	11/25/14 22:18	EPA 3050B	1,6010C	TT
Barium, Total	49		mg/kg	0.93	0.28	2	11/24/14 20:11	11/25/14 22:18	EPA 3050B	1,6010C	TT
Beryllium, Total	0.35	J	mg/kg	0.46	0.09	2	11/24/14 20:11	11/25/14 22:18	EPA 3050B	1,6010C	TT
Cadmium, Total	ND		mg/kg	0.93	0.07	2	11/24/14 20:11	11/25/14 22:18	EPA 3050B	1,6010C	TT
Calcium, Total	3900		mg/kg	9.3	2.8	2	11/24/14 20:11	11/25/14 22:18	EPA 3050B	1,6010C	TT
Chromium, Total	10		mg/kg	0.93	0.18	2	11/24/14 20:11	11/25/14 22:18	EPA 3050B	1,6010C	TT
Cobalt, Total	7.1		mg/kg	1.8	0.46	2	11/24/14 20:11	11/25/14 22:18	EPA 3050B	1,6010C	TT
Copper, Total	20		mg/kg	0.93	0.18	2	11/24/14 20:11	11/25/14 22:18	EPA 3050B	1,6010C	TT
Iron, Total	18000		mg/kg	4.6	1.8	2	11/24/14 20:11	11/25/14 22:18	EPA 3050B	1,6010C	TT
Lead, Total	160		mg/kg	4.6	0.18	2	11/24/14 20:11	11/25/14 22:18	EPA 3050B	1,6010C	TT
Magnesium, Total	1400		mg/kg	9.3	0.93	2	11/24/14 20:11	11/25/14 22:18	EPA 3050B	1,6010C	TT
Manganese, Total	290		mg/kg	0.93	0.18	2	11/24/14 20:11	11/25/14 22:18	EPA 3050B	1,6010C	TT
Mercury, Total	0.22		mg/kg	0.08	0.02	1	11/22/14 11:40	11/24/14 17:21	EPA 7471B	1,7471B	MC
Nickel, Total	16		mg/kg	2.3	0.37	2	11/24/14 20:11	11/25/14 22:18	EPA 3050B	1,6010C	TT
Potassium, Total	450		mg/kg	230	37.	2	11/24/14 20:11	11/25/14 22:18	EPA 3050B	1,6010C	TT
Selenium, Total	1.2	J	mg/kg	1.8	0.28	2	11/24/14 20:11	11/25/14 22:18	EPA 3050B	1,6010C	TT
Silver, Total	ND		mg/kg	0.93	0.18	2	11/24/14 20:11	11/25/14 22:18	EPA 3050B	1,6010C	TT
Sodium, Total	87	J	mg/kg	180	28.	2	11/24/14 20:11	11/25/14 22:18	EPA 3050B	1,6010C	TT
Thallium, Total	ND		mg/kg	1.8	0.37	2	11/24/14 20:11	11/25/14 22:18	EPA 3050B	1,6010C	TT
Vanadium, Total	21		mg/kg	0.93	0.09	2	11/24/14 20:11	11/25/14 22:18	EPA 3050B	1,6010C	TT
Zinc, Total	88		mg/kg	4.6	0.65	2	11/24/14 20:11	11/25/14 22:18	EPA 3050B	1,6010C	TT

Project Name:	MCGUINNESS BOULEVARD	**Lab Number:**	L1428173
Project Number:	Not Specified	**Report Date:**	12/02/14

SAMPLE RESULTS

Lab ID:	L1428173-06	Date Collected:	11/20/14 13:20
Client ID:	VHB SB-5 (0-2')	Date Received:	11/21/14
Sample Location:	209-235 MCGUINESS BLVD.	Field Prep:	Not Specified
Matrix:	Soil		
Percent Solids:	85%		

Parameter	Result	Qualifier	Units	RL	MDL	Dilution Factor	Date Prepared	Date Analyzed	Prep Method	Analytical Method	Analyst
Total Metals - Westborough Lab											
Aluminum, Total	6900		mg/kg	9.0	1.8	2	11/24/14 20:11	11/25/14 22:22	EPA 3050B	1,6010C	TT
Antimony, Total	1.5	J	mg/kg	4.5	0.72	2	11/24/14 20:11	11/25/14 22:22	EPA 3050B	1,6010C	TT
Arsenic, Total	9.2		mg/kg	0.90	0.18	2	11/24/14 20:11	11/25/14 22:22	EPA 3050B	1,6010C	TT
Barium, Total	66		mg/kg	0.90	0.27	2	11/24/14 20:11	11/25/14 22:22	EPA 3050B	1,6010C	TT
Beryllium, Total	0.26	J	mg/kg	0.45	0.09	2	11/24/14 20:11	11/25/14 22:22	EPA 3050B	1,6010C	TT
Cadmium, Total	ND		mg/kg	0.90	0.06	2	11/24/14 20:11	11/25/14 22:22	EPA 3050B	1,6010C	TT
Calcium, Total	59000		mg/kg	9.0	2.7	2	11/24/14 20:11	11/25/14 22:22	EPA 3050B	1,6010C	TT
Chromium, Total	11		mg/kg	0.90	0.18	2	11/24/14 20:11	11/25/14 22:22	EPA 3050B	1,6010C	TT
Cobalt, Total	6.2		mg/kg	1.8	0.45	2	11/24/14 20:11	11/25/14 22:22	EPA 3050B	1,6010C	TT
Copper, Total	40		mg/kg	0.90	0.18	2	11/24/14 20:11	11/25/14 22:22	EPA 3050B	1,6010C	TT
Iron, Total	12000		mg/kg	4.5	1.8	2	11/24/14 20:11	11/25/14 22:22	EPA 3050B	1,6010C	TT
Lead, Total	54		mg/kg	4.5	0.18	2	11/24/14 20:11	11/25/14 22:22	EPA 3050B	1,6010C	TT
Magnesium, Total	4600		mg/kg	9.0	0.90	2	11/24/14 20:11	11/25/14 22:22	EPA 3050B	1,6010C	TT
Manganese, Total	360		mg/kg	0.90	0.18	2	11/24/14 20:11	11/25/14 22:22	EPA 3050B	1,6010C	TT
Mercury, Total	0.26		mg/kg	0.08	0.02	1	11/22/14 11:40	11/24/14 17:22	EPA 7471B	1,7471B	MC
Nickel, Total	8.2		mg/kg	2.2	0.36	2	11/24/14 20:11	11/25/14 22:22	EPA 3050B	1,6010C	TT
Potassium, Total	1200		mg/kg	220	36.	2	11/24/14 20:11	11/25/14 22:22	EPA 3050B	1,6010C	TT
Selenium, Total	0.30	J	mg/kg	1.8	0.27	2	11/24/14 20:11	11/25/14 22:22	EPA 3050B	1,6010C	TT
Silver, Total	0.22	J	mg/kg	0.90	0.18	2	11/24/14 20:11	11/25/14 22:22	EPA 3050B	1,6010C	TT
Sodium, Total	410		mg/kg	180	27.	2	11/24/14 20:11	11/25/14 22:22	EPA 3050B	1,6010C	TT
Thallium, Total	ND		mg/kg	1.8	0.36	2	11/24/14 20:11	11/25/14 22:22	EPA 3050B	1,6010C	TT
Vanadium, Total	17		mg/kg	0.90	0.09	2	11/24/14 20:11	11/25/14 22:22	EPA 3050B	1,6010C	TT
Zinc, Total	58		mg/kg	4.5	0.63	2	11/24/14 20:11	11/25/14 22:22	EPA 3050B	1,6010C	TT

Project Name: MCGUINNESS BOULEVARD **Lab Number:** L1428173

Project Number: Not Specified **Report Date:** 12/02/14

SAMPLE RESULTS

Lab ID: L1428173-07 Date Collected: 11/20/14 13:45

Client ID: VHB SB-5 (14-16') Date Received: 11/21/14

Sample Location: 209-235 MCGUINESS BLVD. Field Prep: Not Specified

Matrix: Soil

Percent Solids: 67%

Parameter	Result	Qualifier	Units	RL	MDL	Dilution Factor	Date Prepared	Date Analyzed	Prep Method	Analytical Method	Analyst
Total Metals - Westborough Lab											
Aluminum, Total	1600		mg/kg	11	2.3	2	11/24/14 20:11	11/25/14 22:26	EPA 3050B	1,6010C	TT
Antimony, Total	0.94	J	mg/kg	5.7	0.92	2	11/24/14 20:11	11/25/14 22:26	EPA 3050B	1,6010C	TT
Arsenic, Total	2.2		mg/kg	1.1	0.23	2	11/24/14 20:11	11/25/14 22:26	EPA 3050B	1,6010C	TT
Barium, Total	14		mg/kg	1.1	0.34	2	11/24/14 20:11	11/25/14 22:26	EPA 3050B	1,6010C	TT
Beryllium, Total	0.23	J	mg/kg	0.57	0.11	2	11/24/14 20:11	11/25/14 22:26	EPA 3050B	1,6010C	TT
Cadmium, Total	0.08	J	mg/kg	1.1	0.08	2	11/24/14 20:11	11/25/14 22:26	EPA 3050B	1,6010C	TT
Calcium, Total	1200		mg/kg	11	3.4	2	11/24/14 20:11	11/25/14 22:26	EPA 3050B	1,6010C	TT
Chromium, Total	3.4		mg/kg	1.1	0.23	2	11/24/14 20:11	11/25/14 22:26	EPA 3050B	1,6010C	TT
Cobalt, Total	2.3		mg/kg	2.3	0.57	2	11/24/14 20:11	11/25/14 22:26	EPA 3050B	1,6010C	TT
Copper, Total	31		mg/kg	1.1	0.23	2	11/24/14 20:11	11/25/14 22:26	EPA 3050B	1,6010C	TT
Iron, Total	3600		mg/kg	5.7	2.3	2	11/24/14 20:11	11/25/14 22:26	EPA 3050B	1,6010C	TT
Lead, Total	34		mg/kg	5.7	0.23	2	11/24/14 20:11	11/25/14 22:26	EPA 3050B	1,6010C	TT
Magnesium, Total	240		mg/kg	11	1.1	2	11/24/14 20:11	11/25/14 22:26	EPA 3050B	1,6010C	TT
Manganese, Total	25		mg/kg	1.1	0.23	2	11/24/14 20:11	11/25/14 22:26	EPA 3050B	1,6010C	TT
Mercury, Total	0.04	J	mg/kg	0.10	0.02	1	11/22/14 11:40	11/24/14 17:24	EPA 7471B	1,7471B	MC
Nickel, Total	4.7		mg/kg	2.9	0.46	2	11/24/14 20:11	11/25/14 22:26	EPA 3050B	1,6010C	TT
Potassium, Total	190	J	mg/kg	290	46.	2	11/24/14 20:11	11/25/14 22:26	EPA 3050B	1,6010C	TT
Selenium, Total	ND		mg/kg	2.3	0.34	2	11/24/14 20:11	11/25/14 22:26	EPA 3050B	1,6010C	TT
Silver, Total	ND		mg/kg	1.1	0.23	2	11/24/14 20:11	11/25/14 22:26	EPA 3050B	1,6010C	TT
Sodium, Total	90	J	mg/kg	230	34.	2	11/24/14 20:11	11/25/14 22:26	EPA 3050B	1,6010C	TT
Thallium, Total	ND		mg/kg	2.3	0.46	2	11/24/14 20:11	11/25/14 22:26	EPA 3050B	1,6010C	TT
Vanadium, Total	6.1		mg/kg	1.1	0.11	2	11/24/14 20:11	11/25/14 22:26	EPA 3050B	1,6010C	TT
Zinc, Total	41		mg/kg	5.7	0.80	2	11/24/14 20:11	11/25/14 22:26	EPA 3050B	1,6010C	TT

Project Name: MCGUINNESS BOULEVARD **Lab Number:** L1428173

Project Number: Not Specified **Report Date:** 12/02/14

SAMPLE RESULTS

Lab ID: L1428173-08 Date Collected: 11/20/14 13:50

Client ID: VHB GW-1 Date Received: 11/21/14

Sample Location: 209-235 MCGUINESS BLVD. Field Prep: Not Specified

Matrix: Water

Parameter	Result	Qualifier	Units	RL	MDL	Dilution Factor	Date Prepared	Date Analyzed	Prep Method	Analytical Method	Analyst
Total Metals - Westborough Lab											
Aluminum, Total	40.6		mg/l	2.00	0.338	200	11/25/14 08:45	11/25/14 20:56	EPA 3005A	1,6020A	BM
Antimony, Total	0.00310	J	mg/l	0.00400	0.00006	1	11/25/14 08:45	11/25/14 20:49	EPA 3005A	1,6020A	BM
Arsenic, Total	0.02274		mg/l	0.00050	0.00012	1	11/25/14 08:45	11/25/14 20:49	EPA 3005A	1,6020A	BM
Barium, Total	0.4372		mg/l	0.00050	0.00006	1	11/25/14 08:45	11/25/14 20:49	EPA 3005A	1,6020A	BM
Beryllium, Total	0.00521		mg/l	0.00050	0.00015	1	11/25/14 08:45	11/25/14 20:49	EPA 3005A	1,6020A	BM
Cadmium, Total	0.00128		mg/l	0.00020	0.00005	1	11/25/14 08:45	11/25/14 20:49	EPA 3005A	1,6020A	BM
Calcium, Total	221.		mg/l	2.00	0.640	20	11/25/14 08:45	11/25/14 20:53	EPA 3005A	1,6020A	BM
Chromium, Total	0.05571		mg/l	0.00100	0.00025	1	11/25/14 08:45	11/25/14 20:49	EPA 3005A	1,6020A	BM
Cobalt, Total	0.02845		mg/l	0.00020	0.00006	1	11/25/14 08:45	11/25/14 20:49	EPA 3005A	1,6020A	BM
Copper, Total	0.2736		mg/l	0.00100	0.00026	1	11/25/14 08:45	11/25/14 20:49	EPA 3005A	1,6020A	BM
Iron, Total	77.5		mg/l	1.00	0.240	20	11/25/14 08:45	11/25/14 20:53	EPA 3005A	1,6020A	BM
Lead, Total	0.7904		mg/l	0.02000	0.00258	20	11/25/14 08:45	11/25/14 20:53	EPA 3005A	1,6020A	BM
Magnesium, Total	29.7		mg/l	0.0700	0.0223	1	11/25/14 08:45	11/25/14 20:49	EPA 3005A	1,6020A	BM
Manganese, Total	1.997		mg/l	0.01000	0.00604	20	11/25/14 08:45	11/25/14 20:53	EPA 3005A	1,6020A	BM
Mercury, Total	0.00145		mg/l	0.00020	0.00006	1	11/25/14 13:13	11/25/14 17:39	EPA 7470A	1,7470A	AK
Nickel, Total	0.06206		mg/l	0.00050	0.00008	1	11/25/14 08:45	11/25/14 20:49	EPA 3005A	1,6020A	BM
Potassium, Total	10.2		mg/l	0.100	0.0193	1	11/25/14 08:45	11/25/14 20:49	EPA 3005A	1,6020A	BM
Selenium, Total	0.0116		mg/l	0.00500	0.00100	1	11/25/14 08:45	11/25/14 20:49	EPA 3005A	1,6020A	BM
Silver, Total	0.00077		mg/l	0.00040	0.00007	1	11/25/14 08:45	11/25/14 20:49	EPA 3005A	1,6020A	BM
Sodium, Total	20.5		mg/l	0.100	0.0161	1	11/25/14 08:45	11/25/14 20:49	EPA 3005A	1,6020A	BM
Thallium, Total	0.00082		mg/l	0.00050	0.00005	1	11/25/14 08:45	11/25/14 20:49	EPA 3005A	1,6020A	BM
Vanadium, Total	0.06764		mg/l	0.00500	0.00055	1	11/25/14 08:45	11/25/14 20:49	EPA 3005A	1,6020A	BM
Zinc, Total	0.7604		mg/l	0.2000	0.05120	20	11/25/14 08:45	11/25/14 20:53	EPA 3005A	1,6020A	BM
Dissolved Metals - Westborough Lab											
Aluminum, Dissolved	ND		mg/l	0.100	0.0169	10	11/22/14 02:50	11/29/14 17:16	NA	1,6020A	KL
Antimony, Dissolved	0.05073	J	mg/l	0.05500	0.00069	10	11/22/14 02:50	11/29/14 17:16	NA	1,6020A	KL
Arsenic, Dissolved	0.00329	J	mg/l	0.00500	0.00123	10	11/22/14 02:50	11/29/14 17:16	NA	1,6020A	KL
Barium, Dissolved	0.06183		mg/l	0.00500	0.00062	10	11/22/14 02:50	11/29/14 17:16	NA	1,6020A	KL
Beryllium, Dissolved	ND		mg/l	0.00500	0.00150	10	11/22/14 02:50	11/29/14 17:16	NA	1,6020A	KL
Cadmium, Dissolved	ND		mg/l	0.00200	0.00050	10	11/22/14 02:50	11/29/14 17:16	NA	1,6020A	KL

Project Name: MCGUINNESS BOULEVARD **Lab Number:** L1428173

Project Number: Not Specified **Report Date:** 12/02/14

SAMPLE RESULTS

Lab ID: L1428173-08 Date Collected: 11/20/14 13:50

Client ID: VHB GW-1 Date Received: 11/21/14

Sample Location: 209-235 MCGUINESS BLVD. Field Prep: Not Specified

Matrix: Water

Parameter	Result	Qualifier	Units	RL	MDL	Dilution Factor	Date Prepared	Date Analyzed	Prep Method	Analytical Method	Analyst
Calcium, Dissolved	210.		mg/l	1.00	0.320	10	11/22/14 02:50	11/29/14 17:16	NA	1,6020A	KL
Chromium, Dissolved	ND		mg/l	0.01500	0.00253	10	11/22/14 02:50	11/29/14 17:16	NA	1,6020A	KL
Cobalt, Dissolved	0.00126	J	mg/l	0.00200	0.00062	10	11/22/14 02:50	11/29/14 17:16	NA	1,6020A	KL
Copper, Dissolved	ND		mg/l	0.01000	0.00262	10	11/22/14 02:50	11/29/14 17:16	NA	1,6020A	KL
Iron, Dissolved	0.190	J	mg/l	0.500	0.120	10	11/22/14 02:50	11/29/14 17:16	NA	1,6020A	KL
Lead, Dissolved	ND		mg/l	0.01000	0.00129	10	11/22/14 02:50	11/29/14 17:16	NA	1,6020A	KL
Magnesium, Dissolved	34.9		mg/l	0.700	0.223	10	11/22/14 02:50	11/29/14 17:16	NA	1,6020A	KL
Manganese, Dissolved	1.078		mg/l	0.00500	0.00302	10	11/22/14 02:50	11/29/14 17:16	NA	1,6020A	KL
Mercury, Dissolved	ND		mg/l	0.00020	0.00006	1	11/24/14 15:06	11/24/14 21:25	EPA 7470A	1,7470A	AK
Nickel, Dissolved	0.00380	J	mg/l	0.00500	0.00086	10	11/22/14 02:50	11/29/14 17:16	NA	1,6020A	KL
Potassium, Dissolved	4.01		mg/l	1.00	0.193	10	11/22/14 02:50	11/29/14 17:16	NA	1,6020A	KL
Selenium, Dissolved	ND		mg/l	0.0500	0.0100	10	11/22/14 02:50	11/29/14 17:16	NA	1,6020A	KL
Silver, Dissolved	ND		mg/l	0.00400	0.00077	10	11/22/14 02:50	11/29/14 17:16	NA	1,6020A	KL
Sodium, Dissolved	25.6		mg/l	1.00	0.161	10	11/22/14 02:50	11/29/14 17:16	NA	1,6020A	KL
Thallium, Dissolved	ND		mg/l	0.00500	0.00056	10	11/22/14 02:50	11/29/14 17:16	NA	1,6020A	KL
Vanadium, Dissolved	ND		mg/l	0.05000	0.00551	10	11/22/14 02:50	11/29/14 17:16	NA	1,6020A	KL
Zinc, Dissolved	ND		mg/l	0.1000	0.02560	10	11/22/14 02:50	11/29/14 17:16	NA	1,6020A	KL

Project Name: MCGUINNESS BOULEVARD **Lab Number:** L1428173

Project Number: Not Specified **Report Date:** 12/02/14

SAMPLE RESULTS

Lab ID: L1428173-09 Date Collected: 11/20/14 14:40

Client ID: VHB SB-3 (0-2') Date Received: 11/21/14

Sample Location: 209-235 MCGUINESS BLVD. Field Prep: Not Specified

Matrix: Soil

Percent Solids: 85%

Parameter	Result	Qualifier	Units	RL	MDL	Dilution Factor	Date Prepared	Date Analyzed	Prep Method	Analytical Method	Analyst
Total Metals - Westborough Lab											
Aluminum, Total	5800		mg/kg	9.1	1.8	2	11/24/14 20:11	11/25/14 22:30	EPA 3050B	1,6010C	TT
Antimony, Total	9.9		mg/kg	4.6	0.73	2	11/24/14 20:11	11/25/14 22:30	EPA 3050B	1,6010C	TT
Arsenic, Total	35		mg/kg	0.91	0.18	2	11/24/14 20:11	11/25/14 22:30	EPA 3050B	1,6010C	TT
Barium, Total	330		mg/kg	0.91	0.27	2	11/24/14 20:11	11/25/14 22:30	EPA 3050B	1,6010C	TT
Beryllium, Total	0.60		mg/kg	0.46	0.09	2	11/24/14 20:11	11/25/14 22:30	EPA 3050B	1,6010C	TT
Cadmium, Total	2.8		mg/kg	0.91	0.06	2	11/24/14 20:11	11/25/14 22:30	EPA 3050B	1,6010C	TT
Calcium, Total	18000		mg/kg	9.1	2.7	2	11/24/14 20:11	11/25/14 22:30	EPA 3050B	1,6010C	TT
Chromium, Total	23		mg/kg	0.91	0.18	2	11/24/14 20:11	11/25/14 22:30	EPA 3050B	1,6010C	TT
Cobalt, Total	6.9		mg/kg	1.8	0.46	2	11/24/14 20:11	11/25/14 22:30	EPA 3050B	1,6010C	TT
Copper, Total	340		mg/kg	0.91	0.18	2	11/24/14 20:11	11/25/14 22:30	EPA 3050B	1,6010C	TT
Iron, Total	26000		mg/kg	4.6	1.8	2	11/24/14 20:11	11/25/14 22:30	EPA 3050B	1,6010C	TT
Lead, Total	680		mg/kg	4.6	0.18	2	11/24/14 20:11	11/25/14 22:30	EPA 3050B	1,6010C	TT
Magnesium, Total	2900		mg/kg	9.1	0.91	2	11/24/14 20:11	11/25/14 22:30	EPA 3050B	1,6010C	TT
Manganese, Total	270		mg/kg	0.91	0.18	2	11/24/14 20:11	11/25/14 22:30	EPA 3050B	1,6010C	TT
Mercury, Total	0.77		mg/kg	0.07	0.02	1	11/22/14 11:40	11/24/14 17:29	EPA 7471B	1,7471B	MC
Nickel, Total	21		mg/kg	2.3	0.36	2	11/24/14 20:11	11/25/14 22:30	EPA 3050B	1,6010C	TT
Potassium, Total	930		mg/kg	230	36.	2	11/24/14 20:11	11/25/14 22:30	EPA 3050B	1,6010C	TT
Selenium, Total	2.3		mg/kg	1.8	0.27	2	11/24/14 20:11	11/25/14 22:30	EPA 3050B	1,6010C	TT
Silver, Total	0.58	J	mg/kg	0.91	0.18	2	11/24/14 20:11	11/25/14 22:30	EPA 3050B	1,6010C	TT
Sodium, Total	460		mg/kg	180	27.	2	11/24/14 20:11	11/25/14 22:30	EPA 3050B	1,6010C	TT
Thallium, Total	ND		mg/kg	1.8	0.36	2	11/24/14 20:11	11/25/14 22:30	EPA 3050B	1,6010C	TT
Vanadium, Total	40		mg/kg	0.91	0.09	2	11/24/14 20:11	11/25/14 22:30	EPA 3050B	1,6010C	TT
Zinc, Total	580		mg/kg	4.6	0.64	2	11/24/14 20:11	11/25/14 22:30	EPA 3050B	1,6010C	TT

Project Name:	MCGUINNESS BOULEVARD	**Lab Number:**	L1428173
Project Number:	Not Specified	**Report Date:**	12/02/14

SAMPLE RESULTS

Lab ID:	L1428173-10	Date Collected:	11/20/14 14:55
Client ID:	VHB SB-3 (14-16')	Date Received:	11/21/14
Sample Location:	209-235 MCGUINESS BLVD.	Field Prep:	Not Specified
Matrix:	Soil		
Percent Solids:	86%		

Parameter	Result	Qualifier	Units	RL	MDL	Dilution Factor	Date Prepared	Date Analyzed	Prep Method	Analytical Method	Analyst
Total Metals - Westborough Lab											
Aluminum, Total	2900		mg/kg	9.0	1.8	2	11/24/14 20:11	11/25/14 22:33	EPA 3050B	1,6010C	TT
Antimony, Total	4.3	J	mg/kg	4.5	0.72	2	11/24/14 20:11	11/25/14 22:33	EPA 3050B	1,6010C	TT
Arsenic, Total	13		mg/kg	0.90	0.18	2	11/24/14 20:11	11/25/14 22:33	EPA 3050B	1,6010C	TT
Barium, Total	120		mg/kg	0.90	0.27	2	11/24/14 20:11	11/25/14 22:33	EPA 3050B	1,6010C	TT
Beryllium, Total	0.22	J	mg/kg	0.45	0.09	2	11/24/14 20:11	11/25/14 22:33	EPA 3050B	1,6010C	TT
Cadmium, Total	1.1		mg/kg	0.90	0.06	2	11/24/14 20:11	11/25/14 22:33	EPA 3050B	1,6010C	TT
Calcium, Total	8000		mg/kg	9.0	2.7	2	11/24/14 20:11	11/25/14 22:33	EPA 3050B	1,6010C	TT
Chromium, Total	12		mg/kg	0.90	0.18	2	11/24/14 20:11	11/25/14 22:33	EPA 3050B	1,6010C	TT
Cobalt, Total	3.4		mg/kg	1.8	0.45	2	11/24/14 20:11	11/25/14 22:33	EPA 3050B	1,6010C	TT
Copper, Total	87		mg/kg	0.90	0.18	2	11/24/14 20:11	11/25/14 22:33	EPA 3050B	1,6010C	TT
Iron, Total	16000		mg/kg	4.5	1.8	2	11/24/14 20:11	11/25/14 22:33	EPA 3050B	1,6010C	TT
Lead, Total	360		mg/kg	4.5	0.18	2	11/24/14 20:11	11/25/14 22:33	EPA 3050B	1,6010C	TT
Magnesium, Total	1600		mg/kg	9.0	0.90	2	11/24/14 20:11	11/25/14 22:33	EPA 3050B	1,6010C	TT
Manganese, Total	140		mg/kg	0.90	0.18	2	11/24/14 20:11	11/25/14 22:33	EPA 3050B	1,6010C	TT
Mercury, Total	0.48		mg/kg	0.08	0.02	1	11/22/14 11:40	11/24/14 17:31	EPA 7471B	1,7471B	MC
Nickel, Total	11		mg/kg	2.2	0.36	2	11/24/14 20:11	11/25/14 22:33	EPA 3050B	1,6010C	TT
Potassium, Total	420		mg/kg	220	36.	2	11/24/14 20:11	11/25/14 22:33	EPA 3050B	1,6010C	TT
Selenium, Total	0.59	J	mg/kg	1.8	0.27	2	11/24/14 20:11	11/25/14 22:33	EPA 3050B	1,6010C	TT
Silver, Total	0.18	J	mg/kg	0.90	0.18	2	11/24/14 20:11	11/25/14 22:33	EPA 3050B	1,6010C	TT
Sodium, Total	190		mg/kg	180	27.	2	11/24/14 20:11	11/25/14 22:33	EPA 3050B	1,6010C	TT
Thallium, Total	ND		mg/kg	1.8	0.36	2	11/24/14 20:11	11/25/14 22:33	EPA 3050B	1,6010C	TT
Vanadium, Total	15		mg/kg	0.90	0.09	2	11/24/14 20:11	11/25/14 22:33	EPA 3050B	1,6010C	TT
Zinc, Total	340		mg/kg	4.5	0.63	2	11/24/14 20:11	11/25/14 22:33	EPA 3050B	1,6010C	TT

Project Name:	MCGUINNESS BOULEVARD	**Lab Number:**	L1428173
Project Number:	Not Specified	**Report Date:**	12/02/14

SAMPLE RESULTS

Lab ID:	L1428173-11	Date Collected:	11/20/14 15:20
Client ID:	VHB SB-2 (0-2')	Date Received:	11/21/14
Sample Location:	209-235 MCGUINESS BLVD.	Field Prep:	Not Specified
Matrix:	Soil		
Percent Solids:	89%		

Parameter	Result	Qualifier	Units	RL	MDL	Dilution Factor	Date Prepared	Date Analyzed	Prep Method	Analytical Method	Analyst
Total Metals - Westborough Lab											
Aluminum, Total	2700		mg/kg	8.7	1.7	2	11/24/14 20:11	11/25/14 22:38	EPA 3050B	1,6010C	TT
Antimony, Total	3.6	J	mg/kg	4.3	0.69	2	11/24/14 20:11	11/25/14 22:38	EPA 3050B	1,6010C	TT
Arsenic, Total	3.7		mg/kg	0.87	0.17	2	11/24/14 20:11	11/25/14 22:38	EPA 3050B	1,6010C	TT
Barium, Total	47		mg/kg	0.87	0.26	2	11/24/14 20:11	11/25/14 22:38	EPA 3050B	1,6010C	TT
Beryllium, Total	0.42	J	mg/kg	0.43	0.09	2	11/24/14 20:11	11/25/14 22:38	EPA 3050B	1,6010C	TT
Cadmium, Total	ND		mg/kg	0.87	0.06	2	11/24/14 20:11	11/25/14 22:38	EPA 3050B	1,6010C	TT
Calcium, Total	21000		mg/kg	8.7	2.6	2	11/24/14 20:11	11/25/14 22:38	EPA 3050B	1,6010C	TT
Chromium, Total	9.6		mg/kg	0.87	0.17	2	11/24/14 20:11	11/25/14 22:38	EPA 3050B	1,6010C	TT
Cobalt, Total	4.6		mg/kg	1.7	0.43	2	11/24/14 20:11	11/25/14 22:38	EPA 3050B	1,6010C	TT
Copper, Total	38		mg/kg	0.87	0.17	2	11/24/14 20:11	11/25/14 22:38	EPA 3050B	1,6010C	TT
Iron, Total	7400		mg/kg	4.3	1.7	2	11/24/14 20:11	11/25/14 22:38	EPA 3050B	1,6010C	TT
Lead, Total	150		mg/kg	4.3	0.17	2	11/24/14 20:11	11/25/14 22:38	EPA 3050B	1,6010C	TT
Magnesium, Total	560		mg/kg	8.7	0.87	2	11/24/14 20:11	11/25/14 22:38	EPA 3050B	1,6010C	TT
Manganese, Total	46		mg/kg	0.87	0.17	2	11/24/14 20:11	11/25/14 22:38	EPA 3050B	1,6010C	TT
Mercury, Total	1.9		mg/kg	0.07	0.02	1	11/22/14 11:40	11/24/14 17:33	EPA 7471B	1,7471B	MC
Nickel, Total	9.0		mg/kg	2.2	0.35	2	11/24/14 20:11	11/25/14 22:38	EPA 3050B	1,6010C	TT
Potassium, Total	490		mg/kg	220	35.	2	11/24/14 20:11	11/25/14 22:38	EPA 3050B	1,6010C	TT
Selenium, Total	0.32	J	mg/kg	1.7	0.26	2	11/24/14 20:11	11/25/14 22:38	EPA 3050B	1,6010C	TT
Silver, Total	ND		mg/kg	0.87	0.17	2	11/24/14 20:11	11/25/14 22:38	EPA 3050B	1,6010C	TT
Sodium, Total	200		mg/kg	170	26.	2	11/24/14 20:11	11/25/14 22:38	EPA 3050B	1,6010C	TT
Thallium, Total	ND		mg/kg	1.7	0.35	2	11/24/14 20:11	11/25/14 22:38	EPA 3050B	1,6010C	TT
Vanadium, Total	16		mg/kg	0.87	0.09	2	11/24/14 20:11	11/25/14 22:38	EPA 3050B	1,6010C	TT
Zinc, Total	91		mg/kg	4.3	0.61	2	11/24/14 20:11	11/25/14 22:38	EPA 3050B	1,6010C	TT

Project Name: MCGUINNESS BOULEVARD **Lab Number:** L1428173

Project Number: Not Specified **Report Date:** 12/02/14

SAMPLE RESULTS

Lab ID: L1428173-12 Date Collected: 11/20/14 15:40

Client ID: VHB SB-2 (14-16') Date Received: 11/21/14

Sample Location: 209-235 MCGUINESS BLVD. Field Prep: Not Specified

Matrix: Soil

Percent Solids: 84%

Parameter	Result	Qualifier	Units	RL	MDL	Dilution Factor	Date Prepared	Date Analyzed	Prep Method	Analytical Method	Analyst
Total Metals - Westborough Lab											
Aluminum, Total	11000		mg/kg	9.5	1.9	2	11/24/14 20:11	11/25/14 22:58	EPA 3050B	1,6010C	TT
Antimony, Total	ND		mg/kg	4.8	0.76	2	11/24/14 20:11	11/25/14 22:58	EPA 3050B	1,6010C	TT
Arsenic, Total	7.1		mg/kg	0.95	0.19	2	11/24/14 20:11	11/25/14 22:58	EPA 3050B	1,6010C	TT
Barium, Total	17		mg/kg	0.95	0.28	2	11/24/14 20:11	11/25/14 22:58	EPA 3050B	1,6010C	TT
Beryllium, Total	0.32	J	mg/kg	0.48	0.10	2	11/24/14 20:11	11/25/14 22:58	EPA 3050B	1,6010C	TT
Cadmium, Total	ND		mg/kg	0.95	0.07	2	11/24/14 20:11	11/25/14 22:58	EPA 3050B	1,6010C	TT
Calcium, Total	1400		mg/kg	9.5	2.8	2	11/24/14 20:11	11/25/14 22:58	EPA 3050B	1,6010C	TT
Chromium, Total	16		mg/kg	0.95	0.19	2	11/24/14 20:11	11/25/14 22:58	EPA 3050B	1,6010C	TT
Cobalt, Total	6.7		mg/kg	1.9	0.48	2	11/24/14 20:11	11/25/14 22:58	EPA 3050B	1,6010C	TT
Copper, Total	14		mg/kg	0.95	0.19	2	11/24/14 20:11	11/25/14 22:58	EPA 3050B	1,6010C	TT
Iron, Total	24000		mg/kg	4.8	1.9	2	11/24/14 20:11	11/25/14 22:58	EPA 3050B	1,6010C	TT
Lead, Total	8.2		mg/kg	4.8	0.19	2	11/24/14 20:11	11/25/14 22:58	EPA 3050B	1,6010C	TT
Magnesium, Total	2800		mg/kg	9.5	0.95	2	11/24/14 20:11	11/25/14 22:58	EPA 3050B	1,6010C	TT
Manganese, Total	430		mg/kg	0.95	0.19	2	11/24/14 20:11	11/25/14 22:58	EPA 3050B	1,6010C	TT
Mercury, Total	ND		mg/kg	0.08	0.02	1	11/22/14 11:40	11/24/14 17:35	EPA 7471B	1,7471B	MC
Nickel, Total	13		mg/kg	2.4	0.38	2	11/24/14 20:11	11/25/14 22:58	EPA 3050B	1,6010C	TT
Potassium, Total	530		mg/kg	240	38.	2	11/24/14 20:11	11/25/14 22:58	EPA 3050B	1,6010C	TT
Selenium, Total	ND		mg/kg	1.9	0.28	2	11/24/14 20:11	11/25/14 22:58	EPA 3050B	1,6010C	TT
Silver, Total	ND		mg/kg	0.95	0.19	2	11/24/14 20:11	11/25/14 22:58	EPA 3050B	1,6010C	TT
Sodium, Total	76	J	mg/kg	190	28.	2	11/24/14 20:11	11/25/14 22:58	EPA 3050B	1,6010C	TT
Thallium, Total	ND		mg/kg	1.9	0.38	2	11/24/14 20:11	11/25/14 22:58	EPA 3050B	1,6010C	TT
Vanadium, Total	19		mg/kg	0.95	0.10	2	11/24/14 20:11	11/25/14 22:58	EPA 3050B	1,6010C	TT
Zinc, Total	38		mg/kg	4.8	0.66	2	11/24/14 20:11	11/25/14 22:58	EPA 3050B	1,6010C	TT

Project Name: MCGUINNESS BOULEVARD **Lab Number:** L1428173

Project Number: Not Specified **Report Date:** 12/02/14

Method Blank Analysis
Batch Quality Control

Parameter	Result	Qualifier	Units	RL	MDL	Dilution Factor	Date Prepared	Date Analyzed	Analytical Method	Analyst
Total Metals - Westborough Lab for sample(s): 01-07,09-12 Batch: WG742947-1										
Mercury, Total	ND		mg/kg	0.08	0.02	1	11/22/14 11:40	11/24/14 17:00	1,7471B	MC

Prep Information

Digestion Method: EPA 7471B

Parameter	Result	Qualifier	Units	RL	MDL	Dilution Factor	Date Prepared	Date Analyzed	Analytical Method	Analyst
Dissolved Metals - Westborough Lab for sample(s): 08 Batch: WG743366-1										
Mercury, Dissolved	ND		mg/l	0.00020	0.00006	1	11/24/14 15:06	11/24/14 21:22	1,7470A	AK

Prep Information

Digestion Method: EPA 7470A

Parameter	Result	Qualifier	Units	RL	MDL	Dilution Factor	Date Prepared	Date Analyzed	Analytical Method	Analyst
Total Metals - Westborough Lab for sample(s): 08 Batch: WG743404-1										
Aluminum, Total	ND		mg/l	0.0100	0.00169	1	11/25/14 08:45	11/25/14 19:51	1,6020A	BM
Antimony, Total	0.00069	J	mg/l	0.00400	0.00006	1	11/25/14 08:45	11/25/14 19:51	1,6020A	BM
Arsenic, Total	ND		mg/l	0.00050	0.00012	1	11/25/14 08:45	11/25/14 19:51	1,6020A	BM
Barium, Total	ND		mg/l	0.00050	0.00006	1	11/25/14 08:45	11/25/14 19:51	1,6020A	BM
Beryllium, Total	ND		mg/l	0.00050	0.00015	1	11/25/14 08:45	11/25/14 19:51	1,6020A	BM
Cadmium, Total	ND		mg/l	0.00020	0.00005	1	11/25/14 08:45	11/25/14 19:51	1,6020A	BM
Calcium, Total	ND		mg/l	0.100	0.0320	1	11/25/14 08:45	11/25/14 19:51	1,6020A	BM
Chromium, Total	0.00046	J	mg/l	0.00100	0.00025	1	11/25/14 08:45	11/25/14 19:51	1,6020A	BM
Cobalt, Total	ND		mg/l	0.00020	0.00006	1	11/25/14 08:45	11/25/14 19:51	1,6020A	BM
Copper, Total	0.00031	J	mg/l	0.00100	0.00026	1	11/25/14 08:45	11/25/14 19:51	1,6020A	BM
Iron, Total	ND		mg/l	0.0500	0.0120	1	11/25/14 08:45	11/25/14 19:51	1,6020A	BM
Lead, Total	ND		mg/l	0.00100	0.00012	1	11/25/14 08:45	11/25/14 19:51	1,6020A	BM
Magnesium, Total	ND		mg/l	0.0700	0.0223	1	11/25/14 08:45	11/25/14 19:51	1,6020A	BM
Manganese, Total	ND		mg/l	0.00050	0.00030	1	11/25/14 08:45	11/25/14 19:51	1,6020A	BM
Nickel, Total	0.00010	J	mg/l	0.00050	0.00008	1	11/25/14 08:45	11/25/14 19:51	1,6020A	BM
Potassium, Total	ND		mg/l	0.100	0.0193	1	11/25/14 08:45	11/25/14 19:51	1,6020A	BM

Project Name: MCGUINNESS BOULEVARD **Lab Number:** L1428173

Project Number: Not Specified **Report Date:** 12/02/14

Method Blank Analysis
Batch Quality Control

Selenium, Total	ND		mg/l	0.00500	0.00100	1	11/25/14 08:45	11/25/14 19:51	1,6020A	BM
Silver, Total	ND		mg/l	0.00040	0.00007	1	11/25/14 08:45	11/25/14 19:51	1,6020A	BM
Sodium, Total	0.0207	J	mg/l	0.100	0.0161	1	11/25/14 08:45	11/25/14 19:51	1,6020A	BM
Thallium, Total	ND		mg/l	0.00050	0.00005	1	11/25/14 08:45	11/25/14 19:51	1,6020A	BM
Vanadium, Total	ND		mg/l	0.00500	0.00055	1	11/25/14 08:45	11/25/14 19:51	1,6020A	BM
Zinc, Total	ND		mg/l	0.01000	0.00256	1	11/25/14 08:45	11/25/14 19:51	1,6020A	BM

Prep Information

Digestion Method: EPA 3005A

Parameter	Result	Qualifier	Units	RL	MDL	Dilution Factor	Date Prepared	Date Analyzed	Analytical Method	Analyst
Total Metals - Westborough Lab for sample(s): 01-07,09-12 Batch: WG743496-1										
Aluminum, Total	ND		mg/kg	4.0	0.80	1	11/24/14 20:11	11/25/14 21:25	1,6010C	TT
Antimony, Total	ND		mg/kg	2.0	0.32	1	11/24/14 20:11	11/25/14 21:25	1,6010C	TT
Arsenic, Total	ND		mg/kg	0.40	0.08	1	11/24/14 20:11	11/25/14 21:25	1,6010C	TT
Barium, Total	ND		mg/kg	0.40	0.12	1	11/24/14 20:11	11/25/14 21:25	1,6010C	TT
Beryllium, Total	ND		mg/kg	0.20	0.04	1	11/24/14 20:11	11/25/14 21:25	1,6010C	TT
Cadmium, Total	ND		mg/kg	0.40	0.03	1	11/24/14 20:11	11/25/14 21:25	1,6010C	TT
Calcium, Total	ND		mg/kg	4.0	1.2	1	11/24/14 20:11	11/25/14 21:25	1,6010C	TT
Chromium, Total	ND		mg/kg	0.40	0.08	1	11/24/14 20:11	11/25/14 21:25	1,6010C	TT
Cobalt, Total	ND		mg/kg	0.80	0.20	1	11/24/14 20:11	11/25/14 21:25	1,6010C	TT
Copper, Total	ND		mg/kg	0.40	0.08	1	11/24/14 20:11	11/25/14 21:25	1,6010C	TT
Iron, Total	ND		mg/kg	2.0	0.80	1	11/24/14 20:11	11/25/14 21:25	1,6010C	TT
Lead, Total	ND		mg/kg	2.0	0.08	1	11/24/14 20:11	11/25/14 21:25	1,6010C	TT
Magnesium, Total	ND		mg/kg	4.0	0.40	1	11/24/14 20:11	11/25/14 21:25	1,6010C	TT
Manganese, Total	ND		mg/kg	0.40	0.08	1	11/24/14 20:11	11/25/14 21:25	1,6010C	TT
Nickel, Total	ND		mg/kg	1.0	0.16	1	11/24/14 20:11	11/25/14 21:25	1,6010C	TT
Potassium, Total	ND		mg/kg	100	16.	1	11/24/14 20:11	11/25/14 21:25	1,6010C	TT
Selenium, Total	ND		mg/kg	0.80	0.12	1	11/24/14 20:11	11/25/14 21:25	1,6010C	TT
Silver, Total	ND		mg/kg	0.40	0.08	1	11/24/14 20:11	11/25/14 21:25	1,6010C	TT
Sodium, Total	ND		mg/kg	80	12.	1	11/24/14 20:11	11/25/14 21:25	1,6010C	TT
Thallium, Total	ND		mg/kg	0.80	0.16	1	11/24/14 20:11	11/25/14 21:25	1,6010C	TT
Vanadium, Total	ND		mg/kg	0.40	0.04	1	11/24/14 20:11	11/25/14 21:25	1,6010C	TT
Zinc, Total	ND		mg/kg	2.0	0.28	1	11/24/14 20:11	11/25/14 21:25	1,6010C	TT

Project Name: MCGUINNESS BOULEVARD **Lab Number:** L1428173

Project Number: Not Specified **Report Date:** 12/02/14

Method Blank Analysis
Batch Quality Control

Prep Information

Digestion Method: EPA 3050B

Parameter	Result	Qualifier	Units	RL	MDL	Dilution Factor	Date Prepared	Date Analyzed	Analytical Method	Analyst
Total Metals - Westborough Lab for sample(s): 08 Batch: WG743708-1										
Mercury, Total	ND		mg/l	0.00020	0.00006	1	11/25/14 13:13	11/25/14 17:28	1,7470A	AK

Prep Information

Digestion Method: EPA 7470A

Parameter	Result	Qualifier	Units	RL	MDL	Dilution Factor	Date Prepared	Date Analyzed	Analytical Method	Analyst
Dissolved Metals - Westborough Lab for sample(s): 08 Batch: WG744093-1										
Aluminum, Dissolved	0.00502	J	mg/l	0.0100	0.00169	1	11/22/14 02:50	11/29/14 15:48	1,6020A	KL
Antimony, Dissolved	0.00251	J	mg/l	0.00550	0.00006	1	11/22/14 02:50	11/29/14 15:48	1,6020A	KL
Arsenic, Dissolved	ND		mg/l	0.00050	0.00012	1	11/22/14 02:50	11/29/14 15:48	1,6020A	KL
Barium, Dissolved	ND		mg/l	0.00050	0.00006	1	11/22/14 02:50	11/29/14 15:48	1,6020A	KL
Beryllium, Dissolved	ND		mg/l	0.00050	0.00015	1	11/22/14 02:50	11/29/14 15:48	1,6020A	KL
Cadmium, Dissolved	ND		mg/l	0.00020	0.00005	1	11/22/14 02:50	11/29/14 15:48	1,6020A	KL
Calcium, Dissolved	0.0374	J	mg/l	0.100	0.0320	1	11/22/14 02:50	11/29/14 15:48	1,6020A	KL
Chromium, Dissolved	0.00110	J	mg/l	0.00150	0.00025	1	11/22/14 02:50	11/29/14 15:48	1,6020A	KL
Cobalt, Dissolved	ND		mg/l	0.00020	0.00006	1	11/22/14 02:50	11/29/14 15:48	1,6020A	KL
Copper, Dissolved	0.00041	J	mg/l	0.00100	0.00026	1	11/22/14 02:50	11/29/14 15:48	1,6020A	KL
Iron, Dissolved	ND		mg/l	0.0500	0.0120	1	11/22/14 02:50	11/29/14 15:48	1,6020A	KL
Lead, Dissolved	ND		mg/l	0.00100	0.00012	1	11/22/14 02:50	11/29/14 15:48	1,6020A	KL
Magnesium, Dissolved	ND		mg/l	0.0700	0.0223	1	11/22/14 02:50	11/29/14 15:48	1,6020A	KL
Manganese, Dissolved	ND		mg/l	0.00050	0.00030	1	11/22/14 02:50	11/29/14 15:48	1,6020A	KL
Nickel, Dissolved	0.00026	J	mg/l	0.00050	0.00008	1	11/22/14 02:50	11/29/14 15:48	1,6020A	KL
Potassium, Dissolved	0.0201	J	mg/l	0.100	0.0193	1	11/22/14 02:50	11/29/14 15:48	1,6020A	KL
Selenium, Dissolved	ND		mg/l	0.00500	0.00100	1	11/22/14 02:50	11/29/14 15:48	1,6020A	KL
Silver, Dissolved	0.00010	J	mg/l	0.00040	0.00007	1	11/22/14 02:50	11/29/14 15:48	1,6020A	KL
Sodium, Dissolved	0.0288	J	mg/l	0.100	0.0161	1	11/22/14 02:50	11/29/14 15:48	1,6020A	KL
Thallium, Dissolved	ND		mg/l	0.00050	0.00005	1	11/22/14 02:50	11/29/14 15:48	1,6020A	KL
Vanadium, Dissolved	ND		mg/l	0.00500	0.00055	1	11/22/14 02:50	11/29/14 15:48	1,6020A	KL

Project Name: MCGUINNESS BOULEVARD **Lab Number:** L1428173

Project Number: Not Specified **Report Date:** 12/02/14

Method Blank Analysis
Batch Quality Control

Zinc, Dissolved	0.00628	J	mg/l	0.01000	0.00256	1	11/22/14 02:50	11/29/14 15:48	1,6020A	KL

Prep Information

Digestion Method: NA

Lab Control Sample Analysis
Batch Quality Control

Project Name: MCGUINNESS BOULEVARD
Project Number: Not Specified

Lab Number: L1428173
Report Date: 12/02/14

Parameter	LCS %Recovery	Qual	LCSD %Recovery	Qual	%Recovery Limits	RPD	Qual	RPD Limits
Total Metals - Westborough Lab Associated sample(s): 01-07,09-12 Batch: WG742947-2 SRM Lot Number: D083-540								
Mercury, Total	90		-		75-126	-		
Dissolved Metals - Westborough Lab Associated sample(s): 08 Batch: WG743366-2								
Mercury, Dissolved	110		-		70-130	-		

Lab Control Sample Analysis
Batch Quality Control

Project Name: MCGUINNESS BOULEVARD
Project Number: Not Specified

Lab Number: L1428173
Report Date: 12/02/14

Parameter	LCS %Recovery	LCSD %Recovery	%Recovery Limits	RPD	RPD Limits
Total Metals - Westborough Lab Associated sample(s): 08 Batch: WG743404-2					
Aluminum, Total	98	-	80-120	-	
Antimony, Total	111	-	80-120	-	
Arsenic, Total	88	-	80-120	-	
Barium, Total	96	-	80-120	-	
Beryllium, Total	102	-	80-120	-	
Cadmium, Total	97	-	80-120	-	
Calcium, Total	97	-	80-120	-	
Chromium, Total	93	-	80-120	-	
Cobalt, Total	97	-	80-120	-	
Copper, Total	92	-	80-120	-	
Iron, Total	89	-	80-120	-	
Lead, Total	98	-	80-120	-	
Magnesium, Total	106	-	80-120	-	
Manganese, Total	98	-	80-120	-	
Nickel, Total	92	-	80-120	-	
Potassium, Total	98	-	80-120	-	
Selenium, Total	109	-	80-120	-	
Silver, Total	93	-	80-120	-	
Sodium, Total	109	-	80-120	-	
Thallium, Total	93	-	80-120	-	
Vanadium, Total	97	-	80-120	-	

Lab Control Sample Analysis
Batch Quality Control

Project Name: MCGUINNESS BOULEVARD
Project Number: Not Specified

Lab Number: L1428173
Report Date: 12/02/14

Parameter	LCS %Recovery	LCSD %Recovery	%Recovery Limits	RPD	RPD Limits
Total Metals - Westborough Lab Associated sample(s): 08 Batch: WG743404-2					
Zinc, Total	102	-	80-120	-	

Lab Control Sample Analysis
Batch Quality Control

Project Name: MCGUINNESS BOULEVARD
Project Number: Not Specified

Lab Number: L1428173
Report Date: 12/02/14

Parameter	LCS %Recovery	LCSD %Recovery	%Recovery Limits	RPD	RPD Limits
Total Metals - Westborough Lab Associated sample(s): 01-07,09-12 Batch: WG743496-2 SRM Lot Number: D083-540					
Aluminum, Total	76	-	51-148	-	
Antimony, Total	164	-	1-210	-	
Arsenic, Total	98	-	78-122	-	
Barium, Total	96	-	82-117	-	
Beryllium, Total	98	-	82-118	-	
Cadmium, Total	94	-	82-118	-	
Calcium, Total	91	-	82-118	-	
Chromium, Total	96	-	79-121	-	
Cobalt, Total	96	-	83-117	-	
Copper, Total	97	-	80-120	-	
Iron, Total	99	-	47-153	-	
Lead, Total	93	-	81-119	-	
Magnesium, Total	86	-	75-124	-	
Manganese, Total	95	-	81-119	-	
Nickel, Total	92	-	82-118	-	
Potassium, Total	88	-	70-130	-	
Selenium, Total	96	-	78-123	-	
Silver, Total	96	-	74-125	-	
Sodium, Total	98	-	70-130	-	
Thallium, Total	95	-	78-122	-	
Vanadium, Total	95	-	65-135	-	

Lab Control Sample Analysis
Batch Quality Control

Project Name: MCGUINNESS BOULEVARD
Project Number: Not Specified

Lab Number: L1428173
Report Date: 12/02/14

Parameter	LCS %Recovery	LCSD %Recovery	%Recovery Limits	RPD	RPD Limits
Total Metals - Westborough Lab Associated sample(s): 01-07,09-12 Batch: WG743496-2 SRM Lot Number: D083-540					
Zinc, Total	97	-	80-121	-	
Total Metals - Westborough Lab Associated sample(s): 08 Batch: WG743708-2					
Mercury, Total	112	-	80-120	-	

Lab Control Sample Analysis
Batch Quality Control

Project Name: MCGUINNESS BOULEVARD
Project Number: Not Specified

Lab Number: L1428173
Report Date: 12/02/14

Parameter	LCS %Recovery	LCSD %Recovery	%Recovery Limits	RPD	RPD Limits
Dissolved Metals - Westborough Lab Associated sample(s): 08 Batch: WG744093-2					
Aluminum, Dissolved	102	-	80-120	-	
Antimony, Dissolved	86	-	80-120	-	
Arsenic, Dissolved	99	-	80-120	-	
Barium, Dissolved	99	-	80-120	-	
Beryllium, Dissolved	101	-	80-120	-	
Cadmium, Dissolved	111	-	80-120	-	
Calcium, Dissolved	102	-	80-120	-	
Chromium, Dissolved	98	-	80-120	-	
Cobalt, Dissolved	102	-	80-120	-	
Copper, Dissolved	99	-	80-120	-	
Iron, Dissolved	108	-	80-120	-	
Lead, Dissolved	97	-	80-120	-	
Magnesium, Dissolved	117	-	80-120	-	
Manganese, Dissolved	100	-	80-120	-	
Nickel, Dissolved	101	-	80-120	-	
Potassium, Dissolved	104	-	80-120	-	
Selenium, Dissolved	105	-	80-120	-	
Silver, Dissolved	102	-	80-120	-	
Sodium, Dissolved	108	-	80-120	-	
Thallium, Dissolved	95	-	80-120	-	
Vanadium, Dissolved	102	-	80-120	-	

Lab Control Sample Analysis
Batch Quality Control

Project Name: MCGUINNESS BOULEVARD
Project Number: Not Specified

Lab Number: L1428173
Report Date: 12/02/14

Parameter	LCS %Recovery	LCSD %Recovery	%Recovery Limits	RPD	RPD Limits
Dissolved Metals - Westborough Lab Associated sample(s): 08 Batch: WG744093-2					
Zinc, Dissolved	107	-	80-120	-	

Matrix Spike Analysis
Batch Quality Control

Project Name: MCGUINNESS BOULEVARD
Project Number: Not Specified

Lab Number: L1428173
Report Date: 12/02/14

Parameter	Native Sample	MS Added	MS Found	MS %Recovery	Qual	MSD Found	MSD %Recovery	Qual	Recovery Limits	RPD	Qual	RPD Limits
Total Metals - Westborough Lab Associated sample(s): 01-07,09-12 QC Batch ID: WG742947-4 QC Sample: L1428173-01 Client ID: VHB SB-4 (0-2')												
Mercury, Total	0.38	0.145	0.65	**186**	Q	-	-		80-120	-		20
Dissolved Metals - Westborough Lab Associated sample(s): 08 QC Batch ID: WG743366-4 QC Sample: L1428173-08 Client ID: VHB GW-1												
Mercury, Dissolved	ND	0.005	0.00525	105		-	-		75-125	-		20

Matrix Spike Analysis
Batch Quality Control

Project Name: MCGUINNESS BOULEVARD
Project Number: Not Specified

Lab Number: L1428173
Report Date: 12/02/14

Parameter	Native Sample	MS Added	MS Found	MS %Recovery		MSD Found	MSD %Recovery	Recovery Limits	RPD	RPD Limits
Total Metals - Westborough Lab Associated sample(s): 08 QC Batch ID: WG743404-4 QC Sample: L1428158-02 Client ID: MS Sample										
Aluminum, Total	0.083	2	2.07	99		-	-	75-125	-	20
Antimony, Total	0.0057	0.5	0.5584	110		-	-	75-125	-	20
Arsenic, Total	0.00495	0.12	0.1196	96		-	-	75-125	-	20
Barium, Total	0.0901	2	2.108	101		-	-	75-125	-	20
Beryllium, Total	ND	0.05	0.05288	106		-	-	75-125	-	20
Cadmium, Total	ND	0.051	0.04964	97		-	-	75-125	-	20
Calcium, Total	112.	10	124	120		-	-	75-125	-	20
Chromium, Total	0.0155	0.2	0.2020	93		-	-	75-125	-	20
Cobalt, Total	0.0004	0.5	0.4860	97		-	-	75-125	-	20
Copper, Total	ND	0.25	0.2340	94		-	-	75-125	-	20
Iron, Total	0.036J	1	0.892	89		-	-	75-125	-	20
Lead, Total	0.00017J	0.51	0.5028	98		-	-	75-125	-	20
Magnesium, Total	11.9	10	23.2	113		-	-	75-125	-	20
Manganese, Total	0.0079	0.5	0.4846	95		-	-	75-125	-	20
Nickel, Total	0.00024J	0.5	0.4500	90		-	-	75-125	-	20
Potassium, Total	9.17	10	20.7	115		-	-	75-125	-	20
Selenium, Total	ND	0.12	0.119	99		-	-	75-125	-	20
Silver, Total	ND	0.05	0.04682	94		-	-	75-125	-	20
Sodium, Total	101.	10	234	**1330**	Q	-	-	75-125	-	20
Thallium, Total	ND	0.12	0.1106	92		-	-	75-125	-	20
Vanadium, Total	0.0113	0.5	0.4966	97		-	-	75-125	-	20

Matrix Spike Analysis
Batch Quality Control

Project Name: MCGUINNESS BOULEVARD
Project Number: Not Specified

Lab Number: L1428173
Report Date: 12/02/14

Parameter	Native Sample	MS Added	MS Found	MS %Recovery	MSD Found	MSD %Recovery	Recovery Limits	RPD	RPD Limits
Total Metals - Westborough Lab Associated sample(s): 08 QC Batch ID: WG743404-4 QC Sample: L1428158-02 Client ID: MS Sample									
Zinc, Total	ND	0.5	0.4956	99	-	-	75-125	-	20

Matrix Spike Analysis
Batch Quality Control

Project Name: MCGUINNESS BOULEVARD
Project Number: Not Specified

Lab Number: L1428173
Report Date: 12/02/14

Parameter	Native Sample	MS Added	MS Found	MS %Recovery		MSD Found	MSD %Recovery	Recovery Limits	RPD	RPD Limits
Total Metals - Westborough Lab Associated sample(s): 01-07,09-12 QC Batch ID: WG743496-4 QC Sample: L1428173-01 Client ID: VHB SB-4 (0-2')										
Aluminum, Total	7500	178	8100	**337**	Q	-	-	75-125	-	20
Antimony, Total	1.6J	44.5	40	90		-	-	75-125	-	20
Arsenic, Total	6.9	10.7	16	85		-	-	75-125	-	20
Barium, Total	180	178	290	**62**	Q	-	-	75-125	-	20
Beryllium, Total	0.37J	4.45	4.4	99		-	-	75-125	-	20
Cadmium, Total	ND	4.54	4.3	95		-	-	75-125	-	20
Calcium, Total	1500	890	2400	101		-	-	75-125	-	20
Chromium, Total	14.	17.8	29	84		-	-	75-125	-	20
Cobalt, Total	7.3	44.5	47	89		-	-	75-125	-	20
Copper, Total	30.	22.2	46	**72**	Q	-	-	75-125	-	20
Iron, Total	15000	89	16000	**1120**	Q	-	-	75-125	-	20
Lead, Total	280	45.4	240	**0**	Q	-	-	75-125	-	20
Magnesium, Total	1500	890	2500	112		-	-	75-125	-	20
Manganese, Total	320	44.5	340	**45**	Q	-	-	75-125	-	20
Nickel, Total	10.	44.5	50	90		-	-	75-125	-	20
Potassium, Total	520	890	1500	110		-	-	75-125	-	20
Selenium, Total	ND	10.7	9.5	89		-	-	75-125	-	20
Silver, Total	ND	26.7	25	94		-	-	75-125	-	20
Sodium, Total	67.J	890	940	106		-	-	75-125	-	20
Thallium, Total	ND	10.7	8.0	75		-	-	75-125	-	20
Vanadium, Total	18.	44.5	60	94		-	-	75-125	-	20

Matrix Spike Analysis
Batch Quality Control

Project Name: MCGUINNESS BOULEVARD
Project Number: Not Specified

Lab Number: L1428173
Report Date: 12/02/14

Parameter	Native Sample	MS Added	MS Found	MS %Recovery		MSD Found	MSD %Recovery	Recovery Limits	RPD	RPD Limits
Total Metals - Westborough Lab Associated sample(s): 01-07,09-12 QC Batch ID: WG743496-4 QC Sample: L1428173-01 Client ID: VHB SB-4 (0-2')										
Zinc, Total	140	44.5	170	**67**	Q	-	-	75-125	-	20
Total Metals - Westborough Lab Associated sample(s): 08 QC Batch ID: WG743708-4 QC Sample: L1428116-01 Client ID: MS Sample										
Mercury, Total	ND	0.005	0.00536	107		-	-	75-125	-	20

Matrix Spike Analysis
Batch Quality Control

Project Name: MCGUINNESS BOULEVARD
Project Number: Not Specified

Lab Number: L1428173
Report Date: 12/02/14

Parameter	Native Sample	MS Added	MS Found	MS %Recovery		MSD Found	MSD %Recovery	Recovery Limits	RPD	RPD Limits
Dissolved Metals - Westborough Lab Associated sample(s): 08 QC Batch ID: WG744093-4 QC Sample: L1428173-08 Client ID: VHB GW-1										
Aluminum, Dissolved	ND	2	2.33	116		-	-	75-125	-	20
Antimony, Dissolved	0.05073J	0.5	0.6028	120		-	-	75-125	-	20
Arsenic, Dissolved	0.00329J	0.12	0.1485	124		-	-	75-125	-	20
Barium, Dissolved	0.06183	2	2.362	115		-	-	75-125	-	20
Beryllium, Dissolved	ND	0.05	0.05980	120		-	-	75-125	-	20
Cadmium, Dissolved	ND	0.051	0.06756	**132**	Q	-	-	75-125	-	20
Calcium, Dissolved	210.	10	242	**320**	Q	-	-	75-125	-	20
Chromium, Dissolved	ND	0.2	0.2304	115		-	-	75-125	-	20
Cobalt, Dissolved	0.00126J	0.5	0.6044	121		-	-	75-125	-	20
Copper, Dissolved	ND	0.25	0.2886	115		-	-	75-125	-	20
Iron, Dissolved	0.190J	1	1.31	**131**	Q	-	-	75-125	-	20
Lead, Dissolved	ND	0.51	0.5684	111		-	-	75-125	-	20
Magnesium, Dissolved	34.9	10	20.5	**0**	Q	-	-	75-125	-	20
Manganese, Dissolved	1.078	0.5	1.822	**149**	Q	-	-	75-125	-	20
Nickel, Dissolved	0.00380J	0.5	0.5796	116		-	-	75-125	-	20
Potassium, Dissolved	4.01	10	9.36	**54**	Q	-	-	75-125	-	20
Selenium, Dissolved	ND	0.12	0.145	121		-	-	75-125	-	20
Silver, Dissolved	ND	0.05	0.05276	106		-	-	75-125	-	20
Sodium, Dissolved	25.6	10	35.2	96		-	-	75-125	-	20
Thallium, Dissolved	ND	0.12	0.1268	106		-	-	75-125	-	20
Vanadium, Dissolved	ND	0.5	0.6034	121		-	-	75-125	-	20

Matrix Spike Analysis
Batch Quality Control

Project Name: MCGUINNESS BOULEVARD
Project Number: Not Specified

Lab Number: L1428173
Report Date: 12/02/14

Parameter	Native Sample	MS Added	MS Found	MS %Recovery	MSD Found	MSD %Recovery	Recovery Limits	RPD	RPD Limits
Dissolved Metals - Westborough Lab Associated sample(s): 08 QC Batch ID: WG744093-4 QC Sample: L1428173-08 Client ID: VHB GW-1									
Zinc, Dissolved	ND	0.5	0.6248	125	-	-	75-125	-	20

Lab Duplicate Analysis
Batch Quality Control

Project Name: MCGUINNESS BOULEVARD
Project Number: Not Specified

Lab Number: L1428173
Report Date: 12/02/14

Parameter	Native Sample	Duplicate Sample	Units	RPD	Qual	RPD Limits
Total Metals - Westborough Lab Associated sample(s): 01-07,09-12 QC Batch ID: WG742947-3 QC Sample: L1428173-01 Client ID: VHB SB-4 (0-2')						
Mercury, Total	0.38	0.52	mg/kg	**31**	Q	20
Dissolved Metals - Westborough Lab Associated sample(s): 08 QC Batch ID: WG743366-3 QC Sample: L1428173-08 Client ID: VHB GW-1						
Mercury, Dissolved	ND	ND	mg/l	NC		20
Total Metals - Westborough Lab Associated sample(s): 08 QC Batch ID: WG743404-3 QC Sample: L1428158-02 Client ID: DUP Sample						
Arsenic, Total	0.00495	0.00496	mg/l	0		20
Cadmium, Total	ND	ND	mg/l	NC		20
Copper, Total	ND	ND	mg/l	NC		20
Lead, Total	0.00017J	ND	mg/l	NC		20
Nickel, Total	0.00024J	0.00033J	mg/l	NC		20
Zinc, Total	ND	ND	mg/l	NC		20

Lab Duplicate Analysis
Batch Quality Control

Project Name: MCGUINNESS BOULEVARD
Project Number: Not Specified

Lab Number: L1428173
Report Date: 12/02/14

Parameter	Native Sample	Duplicate Sample	Units	RPD	RPD Limits
Total Metals - Westborough Lab Associated sample(s): 01-07,09-12 QC Batch ID: WG743496-3 QC Sample: L1428173-01 Client ID: VHB SB-4 (0-2')					
Aluminum, Total	7500	6900	mg/kg	8	20
Antimony, Total	1.6J	1.4J	mg/kg	NC	20
Arsenic, Total	6.9	7.0	mg/kg	1	20
Barium, Total	180	180	mg/kg	0	20
Beryllium, Total	0.37J	0.33J	mg/kg	NC	20
Cadmium, Total	ND	0.07J	mg/kg	NC	20
Calcium, Total	1500	1500	mg/kg	0	20
Chromium, Total	14.	14	mg/kg	0	20
Cobalt, Total	7.3	6.0	mg/kg	20	20
Copper, Total	30.	27	mg/kg	11	20
Iron, Total	15000	15000	mg/kg	0	20
Lead, Total	280	280	mg/kg	0	20
Magnesium, Total	1500	1600	mg/kg	6	20
Manganese, Total	320	280	mg/kg	13	20
Nickel, Total	10.	10	mg/kg	0	20
Potassium, Total	520	520	mg/kg	0	20
Selenium, Total	ND	ND	mg/kg	NC	20
Silver, Total	ND	ND	mg/kg	NC	20
Sodium, Total	67.J	47J	mg/kg	NC	20

Lab Duplicate Analysis
Batch Quality Control

Project Name: MCGUINNESS BOULEVARD
Project Number: Not Specified

Lab Number: L1428173
Report Date: 12/02/14

Parameter	Native Sample	Duplicate Sample	Units	RPD	RPD Limits
Total Metals - Westborough Lab Associated sample(s): 01-07,09-12 QC Batch ID: WG743496-3 QC Sample: L1428173-01 Client ID: VHB SB-4 (0-2')					
Thallium, Total	ND	ND	mg/kg	NC	20
Vanadium, Total	18.	18	mg/kg	0	20
Zinc, Total	140	170	mg/kg	19	20
Total Metals - Westborough Lab Associated sample(s): 08 QC Batch ID: WG743708-3 QC Sample: L1428116-01 Client ID: DUP Sample					
Mercury, Total	ND	ND	mg/l	NC	20

Lab Duplicate Analysis
Batch Quality Control

Project Name: MCGUINNESS BOULEVARD
Project Number: Not Specified

Lab Number: L1428173
Report Date: 12/02/14

Parameter	Native Sample	Duplicate Sample	Units	RPD	RPD Limits
Dissolved Metals - Westborough Lab Associated sample(s): 08 QC Batch ID: WG744093-3 QC Sample: L1428173-08 Client ID: VHB GW-1					
Aluminum, Dissolved	ND	ND	mg/l	NC	20
Antimony, Dissolved	0.05073J	ND	mg/l	NC	20
Arsenic, Dissolved	0.00329J	0.00249J	mg/l	NC	20
Barium, Dissolved	0.06183	0.06260	mg/l	1	20
Beryllium, Dissolved	ND	ND	mg/l	NC	20
Cadmium, Dissolved	ND	ND	mg/l	NC	20
Calcium, Dissolved	210.	203	mg/l	3	20
Chromium, Dissolved	ND	ND	mg/l	NC	20
Cobalt, Dissolved	0.00126J	0.00127J	mg/l	NC	20
Copper, Dissolved	ND	ND	mg/l	NC	20
Iron, Dissolved	0.190J	ND	mg/l	NC	20
Lead, Dissolved	ND	ND	mg/l	NC	20
Magnesium, Dissolved	34.9	35.2	mg/l	1	20
Manganese, Dissolved	1.078	1.090	mg/l	1	20
Nickel, Dissolved	0.00380J	0.00395J	mg/l	NC	20
Potassium, Dissolved	4.01	4.02	mg/l	0	20
Selenium, Dissolved	ND	ND	mg/l	NC	20
Silver, Dissolved	ND	ND	mg/l	NC	20
Sodium, Dissolved	25.6	25.7	mg/l	0	20

Lab Duplicate Analysis
Batch Quality Control

Project Name: MCGUINNESS BOULEVARD
Project Number: Not Specified

Lab Number: L1428173
Report Date: 12/02/14

Parameter	Native Sample	Duplicate Sample	Units	RPD	RPD Limits
Dissolved Metals - Westborough Lab Associated sample(s): 08 QC Batch ID: WG744093-3 QC Sample: L1428173-08 Client ID: VHB GW-1					
Thallium, Dissolved	ND	ND	mg/l	NC	20
Vanadium, Dissolved	ND	ND	mg/l	NC	20
Zinc, Dissolved	ND	ND	mg/l	NC	20

INORGANICS
&
MISCELLANEOUS

Project Name: MCGUINNESS BOULEVARD
Project Number: Not Specified

Lab Number: L1428173
Report Date: 12/02/14

SAMPLE RESULTS

Lab ID: L1428173-01
Client ID: VHB SB-4 (0-2')
Sample Location: 209-235 MCGUINESS BLVD.
Matrix: Soil

Date Collected: 11/20/14 10:00
Date Received: 11/21/14
Field Prep: Not Specified

Parameter	Result	Qualifier	Units	RL	MDL	Dilution Factor	Date Prepared	Date Analyzed	Analytical Method	Analyst
General Chemistry - Westborough Lab										
Solids, Total	86.3		%	0.100	NA	1	-	11/22/14 13:24	30,2540G	RT

Project Name: MCGUINNESS BOULEVARD
Project Number: Not Specified

Lab Number: L1428173
Report Date: 12/02/14

SAMPLE RESULTS

Lab ID: L1428173-02
Client ID: VHB SB-4 (14-16')
Sample Location: 209-235 MCGUINESS BLVD.
Matrix: Soil

Date Collected: 11/20/14 10:25
Date Received: 11/21/14
Field Prep: Not Specified

Parameter	Result	Qualifier	Units	RL	MDL	Dilution Factor	Date Prepared	Date Analyzed	Analytical Method	Analyst
General Chemistry - Westborough Lab										
Solids, Total	84.6		%	0.100	NA	1	-	11/22/14 13:24	30,2540G	RT

Project Name: MCGUINNESS BOULEVARD
Project Number: Not Specified

Lab Number: L1428173
Report Date: 12/02/14

SAMPLE RESULTS

Lab ID: L1428173-03
Client ID: VHB SB-1 (0-2')
Sample Location: 209-235 MCGUINESS BLVD.
Matrix: Soil

Date Collected: 11/20/14 11:15
Date Received: 11/21/14
Field Prep: Not Specified

Parameter	Result	Qualifier	Units	RL	MDL	Dilution Factor	Date Prepared	Date Analyzed	Analytical Method	Analyst
General Chemistry - Westborough Lab										
Solids, Total	88.4		%	0.100	NA	1	-	11/22/14 13:24	30,2540G	RT

Project Name: MCGUINNESS BOULEVARD
Project Number: Not Specified

Lab Number: L1428173
Report Date: 12/02/14

SAMPLE RESULTS

Lab ID: L1428173-04
Client ID: VHB SB-1 (14-16')
Sample Location: 209-235 MCGUINESS BLVD.
Matrix: Soil

Date Collected: 11/20/14 11:40
Date Received: 11/21/14
Field Prep: Not Specified

Parameter	Result	Qualifier	Units	RL	MDL	Dilution Factor	Date Prepared	Date Analyzed	Analytical Method	Analyst
General Chemistry - Westborough Lab										
Solids, Total	86.3		%	0.100	NA	1	-	11/22/14 13:24	30,2540G	RT

Project Name: MCGUINNESS BOULEVARD
Project Number: Not Specified

Lab Number: L1428173
Report Date: 12/02/14

SAMPLE RESULTS

Lab ID: L1428173-05
Client ID: VHB SB-1 (8-10')
Sample Location: 209-235 MCGUINESS BLVD.
Matrix: Soil

Date Collected: 11/20/14 11:45
Date Received: 11/21/14
Field Prep: Not Specified

Parameter	Result	Qualifier	Units	RL	MDL	Dilution Factor	Date Prepared	Date Analyzed	Analytical Method	Analyst
General Chemistry - Westborough Lab										
Solids, Total	84.7		%	0.100	NA	1	-	11/22/14 13:24	30,2540G	RT

Project Name: MCGUINNESS BOULEVARD
Project Number: Not Specified

Lab Number: L1428173
Report Date: 12/02/14

SAMPLE RESULTS

Lab ID: L1428173-06
Client ID: VHB SB-5 (0-2')
Sample Location: 209-235 MCGUINESS BLVD.
Matrix: Soil

Date Collected: 11/20/14 13:20
Date Received: 11/21/14
Field Prep: Not Specified

Parameter	Result	Qualifier	Units	RL	MDL	Dilution Factor	Date Prepared	Date Analyzed	Analytical Method	Analyst
General Chemistry - Westborough Lab										
Solids, Total	84.9		%	0.100	NA	1	-	11/22/14 13:24	30,2540G	RT

Project Name: MCGUINNESS BOULEVARD
Project Number: Not Specified

Lab Number: L1428173
Report Date: 12/02/14

SAMPLE RESULTS

Lab ID: L1428173-07
Client ID: VHB SB-5 (14-16')
Sample Location: 209-235 MCGUINESS BLVD.
Matrix: Soil

Date Collected: 11/20/14 13:45
Date Received: 11/21/14
Field Prep: Not Specified

Parameter	Result	Qualifier	Units	RL	MDL	Dilution Factor	Date Prepared	Date Analyzed	Analytical Method	Analyst
General Chemistry - Westborough Lab										
Solids, Total	67.1		%	0.100	NA	1	-	11/22/14 13:24	30,2540G	RT

Project Name: MCGUINNESS BOULEVARD
Project Number: Not Specified

Lab Number: L1428173
Report Date: 12/02/14

SAMPLE RESULTS

Lab ID: L1428173-09
Client ID: VHB SB-3 (0-2')
Sample Location: 209-235 MCGUINESS BLVD.
Matrix: Soil

Date Collected: 11/20/14 14:40
Date Received: 11/21/14
Field Prep: Not Specified

Parameter	Result	Qualifier	Units	RL	MDL	Dilution Factor	Date Prepared	Date Analyzed	Analytical Method	Analyst
General Chemistry - Westborough Lab										
Solids, Total	85.2		%	0.100	NA	1	-	11/22/14 13:24	30,2540G	RT

Project Name: MCGUINNESS BOULEVARD
Project Number: Not Specified

Lab Number: L1428173
Report Date: 12/02/14

SAMPLE RESULTS

Lab ID: L1428173-10
Client ID: VHB SB-3 (14-16')
Sample Location: 209-235 MCGUINESS BLVD.
Matrix: Soil

Date Collected: 11/20/14 14:55
Date Received: 11/21/14
Field Prep: Not Specified

Parameter	Result	Qualifier	Units	RL	MDL	Dilution Factor	Date Prepared	Date Analyzed	Analytical Method	Analyst
General Chemistry - Westborough Lab										
Solids, Total	86.4		%	0.100	NA	1	-	11/22/14 13:24	30,2540G	RT

Project Name: MCGUINNESS BOULEVARD
Project Number: Not Specified

Lab Number: L1428173
Report Date: 12/02/14

SAMPLE RESULTS

Lab ID: L1428173-11
Client ID: VHB SB-2 (0-2')
Sample Location: 209-235 MCGUINESS BLVD.
Matrix: Soil

Date Collected: 11/20/14 15:20
Date Received: 11/21/14
Field Prep: Not Specified

Parameter	Result	Qualifier	Units	RL	MDL	Dilution Factor	Date Prepared	Date Analyzed	Analytical Method	Analyst
General Chemistry - Westborough Lab										
Solids, Total	89.1		%	0.100	NA	1	-	11/22/14 13:24	30,2540G	RT

Project Name: MCGUINNESS BOULEVARD
Project Number: Not Specified

Lab Number: L1428173
Report Date: 12/02/14

SAMPLE RESULTS

Lab ID: L1428173-12
Client ID: VHB SB-2 (14-16')
Sample Location: 209-235 MCGUINESS BLVD.
Matrix: Soil

Date Collected: 11/20/14 15:40
Date Received: 11/21/14
Field Prep: Not Specified

Parameter	Result	Qualifier	Units	RL	MDL	Dilution Factor	Date Prepared	Date Analyzed	Analytical Method	Analyst
General Chemistry - Westborough Lab										
Solids, Total	83.9		%	0.100	NA	1	-	11/22/14 13:24	30,2540G	RT

Lab Duplicate Analysis
Batch Quality Control

Project Name: MCGUINNESS BOULEVARD
Project Number: Not Specified

Lab Number: L1428173
Report Date: 12/02/14

Parameter	Native Sample	Duplicate Sample	Units	RPD	Qual	RPD Limits
General Chemistry - Westborough Lab Associated sample(s): 01-07,09-12 QC Batch ID: WG743022-1 QC Sample: L1428173-11 Client ID: VHB SB-2 (0-2')						
Solids, Total	89.1	88.0	%	1		20

Project Name: MCGUINNESS BOULEVARD
Project Number: Not Specified

Lab Number: L1428173
Report Date: 12/02/14

Sample Receipt and Container Information

Were project specific reporting limits specified? YES

Reagent H2O Preserved Vials Frozen on: 11/22/2014 01:40

Cooler Information	Custody Seal
Cooler	
A	Absent
B	Absent

Container Information

Container ID	Container Type	Cooler	pH	Temp deg C	Pres	Seal	Analysis(*)
L1428173-01A	Vial MeOH preserved	A	N/A	2.9	Y	Absent	NYTCL-8260HLW(14)
L1428173-01B	Vial water preserved	A	N/A	2.9	Y	Absent	NYTCL-8260HLW(14)
L1428173-01C	Vial water preserved	A	N/A	2.9	Y	Absent	NYTCL-8260HLW(14)
L1428173-01D	Plastic 2oz unpreserved for TS	A	N/A	2.9	Y	Absent	TS(7)
L1428173-01E	Amber 500ml unpreserved	A	N/A	2.9	Y	Absent	BE-TI(180),NYTCL-8270(14),AS-TI(180),BA-TI(180),AG-TI(180),AL-TI(180),CR-TI(180),NI-TI(180),TL-TI(180),CU-TI(180),PB-TI(180),SB-TI(180),SE-TI(180),ZN-TI(180),CO-TI(180),NYTCL-8081(14),V-TI(180),FE-TI(180),HG-T(28),MG-TI(180),MN-TI(180),NYTCL-8082(14),CA-TI(180),CD-TI(180),K-TI(180),NA-TI(180)
L1428173-02A	Vial MeOH preserved	A	N/A	2.9	Y	Absent	NYTCL-8260HLW(14)
L1428173-02B	Vial water preserved	A	N/A	2.9	Y	Absent	NYTCL-8260HLW(14)
L1428173-02C	Vial water preserved	A	N/A	2.9	Y	Absent	NYTCL-8260HLW(14)
L1428173-02D	Plastic 2oz unpreserved for TS	A	N/A	2.9	Y	Absent	TS(7)
L1428173-02E	Amber 500ml unpreserved	A	N/A	2.9	Y	Absent	BE-TI(180),NYTCL-8270(14),AS-TI(180),BA-TI(180),AG-TI(180),AL-TI(180),CR-TI(180),NI-TI(180),TL-TI(180),CU-TI(180),PB-TI(180),SB-TI(180),SE-TI(180),ZN-TI(180),CO-TI(180),NYTCL-8081(14),V-TI(180),FE-TI(180),HG-T(28),MG-TI(180),MN-TI(180),NYTCL-8082(14),CA-TI(180),CD-TI(180),K-TI(180),NA-TI(180)
L1428173-03A	Vial MeOH preserved	B	N/A	2.8	Y	Absent	NYTCL-8260HLW(14)
L1428173-03B	Vial water preserved	B	N/A	2.8	Y	Absent	NYTCL-8260HLW(14)

*Values in parentheses indicate holding time in days

Project Name: MCGUINNESS BOULEVARD
Project Number: Not Specified

Lab Number: L1428173
Report Date: 12/02/14

Container Information

Container ID	Container Type	Cooler	pH	Temp deg C	Pres	Seal	Analysis(*)
L1428173-03C	Vial water preserved	B	N/A	2.8	Y	Absent	NYTCL-8260HLW(14)
L1428173-03D	Plastic 2oz unpreserved for TS	B	N/A	2.8	Y	Absent	TS(7)
L1428173-03E	Amber 500ml unpreserved	B	N/A	2.8	Y	Absent	BE-TI(180),NYTCL-8270(14),AS-TI(180),BA-TI(180),AG-TI(180),AL-TI(180),CR-TI(180),NI-TI(180),TL-TI(180),CU-TI(180),PB-TI(180),SB-TI(180),SE-TI(180),ZN-TI(180),CO-TI(180),NYTCL-8081(14),V-TI(180),FE-TI(180),HG-T(28),MG-TI(180),MN-TI(180),NYTCL-8082(14),CA-TI(180),CD-TI(180),K-TI(180),NA-TI(180)
L1428173-04A	Vial MeOH preserved	B	N/A	2.8	Y	Absent	NYTCL-8260HLW(14)
L1428173-04B	Vial water preserved	B	N/A	2.8	Y	Absent	NYTCL-8260HLW(14)
L1428173-04C	Vial water preserved	B	N/A	2.8	Y	Absent	NYTCL-8260HLW(14)
L1428173-04D	Plastic 2oz unpreserved for TS	B	N/A	2.8	Y	Absent	TS(7)
L1428173-04E	Amber 500ml unpreserved	B	N/A	2.8	Y	Absent	BE-TI(180),NYTCL-8270(14),AS-TI(180),BA-TI(180),AG-TI(180),AL-TI(180),CR-TI(180),NI-TI(180),TL-TI(180),CU-TI(180),PB-TI(180),SB-TI(180),SE-TI(180),ZN-TI(180),CO-TI(180),NYTCL-8081(14),V-TI(180),FE-TI(180),HG-T(28),MG-TI(180),MN-TI(180),NYTCL-8082(14),CA-TI(180),CD-TI(180),K-TI(180),NA-TI(180)
L1428173-05A	Vial MeOH preserved	B	N/A	2.8	Y	Absent	NYTCL-8260HLW(14)
L1428173-05B	Vial water preserved	B	N/A	2.8	Y	Absent	NYTCL-8260HLW(14)
L1428173-05C	Vial water preserved	B	N/A	2.8	Y	Absent	NYTCL-8260HLW(14)
L1428173-05D	Plastic 2oz unpreserved for TS	B	N/A	2.8	Y	Absent	TS(7)
L1428173-05E	Amber 500ml unpreserved	B	N/A	2.8	Y	Absent	BE-TI(180),NYTCL-8270(14),AS-TI(180),BA-TI(180),AG-TI(180),AL-TI(180),CR-TI(180),NI-TI(180),TL-TI(180),CU-TI(180),PB-TI(180),SB-TI(180),SE-TI(180),ZN-TI(180),CO-TI(180),NYTCL-8081(14),V-TI(180),FE-TI(180),HG-T(28),MG-TI(180),MN-TI(180),NYTCL-8082(14),CA-TI(180),CD-TI(180),K-TI(180),NA-TI(180)
L1428173-06A	Vial MeOH preserved	A	N/A	2.9	Y	Absent	NYTCL-8260HLW(14)
L1428173-06B	Vial water preserved	A	N/A	2.9	Y	Absent	NYTCL-8260HLW(14)
L1428173-06C	Vial water preserved	A	N/A	2.9	Y	Absent	NYTCL-8260HLW(14)

*Values in parentheses indicate holding time in days

Project Name: MCGUINNESS BOULEVARD
Project Number: Not Specified

Lab Number: L1428173
Report Date: 12/02/14

Container Information

Container ID	Container Type	Cooler	pH	Temp deg C	Pres	Seal	Analysis(*)
L1428173-06D	Plastic 2oz unpreserved for TS	A	N/A	2.9	Y	Absent	BE-TI(180),NYTCL-8270(14),AS-TI(180),BA-TI(180),AG-TI(180),AL-TI(180),CR-TI(180),NI-TI(180),TL-TI(180),CU-TI(180),PB-TI(180),SB-TI(180),SE-TI(180),ZN-TI(180),CO-TI(180),NYTCL-8081(14),V-TI(180),FE-TI(180),HG-T(28),MG-TI(180),MN-TI(180),NYTCL-8082(14),CA-TI(180),CD-TI(180),K-TI(180),NA-TI(180)
L1428173-06E	Amber 500ml unpreserved	A	N/A	2.9	Y	Absent	BE-TI(180),NYTCL-8270(14),AS-TI(180),BA-TI(180),AG-TI(180),AL-TI(180),CR-TI(180),NI-TI(180),TL-TI(180),CU-TI(180),PB-TI(180),SB-TI(180),SE-TI(180),ZN-TI(180),CO-TI(180),NYTCL-8081(14),V-TI(180),FE-TI(180),HG-T(28),MG-TI(180),MN-TI(180),NYTCL-8082(14),CA-TI(180),CD-TI(180),K-TI(180),NA-TI(180)
L1428173-07A	Vial MeOH preserved	B	N/A	2.8	Y	Absent	NYTCL-8260HLW(14)
L1428173-07B	Vial water preserved	B	N/A	2.8	Y	Absent	NYTCL-8260HLW(14)
L1428173-07C	Vial water preserved	B	N/A	2.8	Y	Absent	NYTCL-8260HLW(14)
L1428173-07D	Plastic 2oz unpreserved for TS	B	N/A	2.8	Y	Absent	TS(7)
L1428173-07E	Amber 500ml unpreserved	B	N/A	2.8	Y	Absent	BE-TI(180),NYTCL-8270(14),AS-TI(180),BA-TI(180),AG-TI(180),AL-TI(180),CR-TI(180),NI-TI(180),TL-TI(180),CU-TI(180),PB-TI(180),SB-TI(180),SE-TI(180),ZN-TI(180),CO-TI(180),NYTCL-8081(14),V-TI(180),FE-TI(180),HG-T(28),MG-TI(180),MN-TI(180),NYTCL-8082(14),CA-TI(180),CD-TI(180),K-TI(180),NA-TI(180)
L1428173-08A	Vial HCl preserved	B	N/A	2.8	Y	Absent	NYTCL-8260(14)
L1428173-08B	Vial HCl preserved	B	N/A	2.8	Y	Absent	NYTCL-8260(14)
L1428173-08C	Vial HCl preserved	B	N/A	2.8	Y	Absent	NYTCL-8260(14)

*Values in parentheses indicate holding time in days

Project Name: MCGUINNESS BOULEVARD
Project Number: Not Specified

Lab Number: L1428173
Report Date: 12/02/14

Container Information

Container ID	Container Type	Cooler	pH	Temp deg C	Pres	Seal	Analysis(*)
L1428173-08D	Plastic 250ml HNO3 preserved	B	N/A	2.8	Y	Absent	BA-6020T(180),FE-6020T(180),SE-6020T(180),TL-6020T(180),CA-6020T(180),CR-6020T(180),K-6020T(180),NI-6020T(180),CU-6020T(180),NA-6020T(180),ZN-6020T(180),PB-6020T(180),BE-6020T(180),MN-6020T(180),AS-6020T(180),SB-6020T(180),V-6020T(180),AG-6020T(180),AL-6020T(180),CD-6020T(180),HG-T(28),MG-6020T(180),CO-6020T(180)
L1428173-08E	Plastic 500ml unpreserved	B	N/A	2.8	Y	Absent	FILTER-MET(1)
L1428173-08F	Amber 1000ml unpreserved	B	N/A	2.8	Y	Absent	NYTCL-8270(7),NYTCL-8270-SIM(7)
L1428173-08G	Amber 1000ml unpreserved	B	N/A	2.8	Y	Absent	NYTCL-8270(7),NYTCL-8270-SIM(7)
L1428173-08H	Amber 500ml unpreserved	B	N/A	2.8	Y	Absent	NYTCL-8081(7)
L1428173-08I	Amber 500ml unpreserved	B	N/A	2.8	Y	Absent	NYTCL-8081(7)
L1428173-08J	Amber 1000ml unpreserved	B	N/A	2.8	Y	Absent	NYTCL-8082-1200ML(7)
L1428173-08K	Amber 1000ml unpreserved	B	N/A	2.8	Y	Absent	NYTCL-8082-1200ML(7)
L1428173-08X	Plastic 120ml HNO3 preserved spl	B	N/A	2.8	Y	Absent	CU-6020S(180),K-6020S(180),SE-6020S(180),V-6020S(180),MN-6020S(180),BE-6020S(180),CO-6020S(180),MG-6020S(180),ZN-6020S(180),CA-6020S(180),CR-6020S(180),FE-6020S(180),BA-6020S(180),NA-6020S(180),NI-6020S(180),PB-6020S(180),TL-6020S(180),AG-6020S(180),AS-6020S(180),SB-6020S(180),AL-6020S(180),CD-6020S(180),HG-S(28)
L1428173-09A	Vial MeOH preserved	A	N/A	2.9	Y	Absent	NYTCL-8260HLW(14)
L1428173-09B	Vial water preserved	A	N/A	2.9	Y	Absent	NYTCL-8260HLW(14)
L1428173-09C	Vial water preserved	A	N/A	2.9	Y	Absent	NYTCL-8260HLW(14)
L1428173-09D	Plastic 2oz unpreserved for TS	A	N/A	2.9	Y	Absent	TS(7)
L1428173-09E	Amber 500ml unpreserved	A	N/A	2.9	Y	Absent	BE-TI(180),NYTCL-8270(14),AS-TI(180),BA-TI(180),AG-TI(180),AL-TI(180),CR-TI(180),NI-TI(180),TL-TI(180),CU-TI(180),PB-TI(180),SB-TI(180),SE-TI(180),ZN-TI(180),CO-TI(180),NYTCL-8081(14),V-TI(180),FE-TI(180),HG-T(28),MG-TI(180),MN-TI(180),NYTCL-8082(14),CA-TI(180),CD-TI(180),K-TI(180),NA-TI(180)
L1428173-10A	Vial MeOH preserved	A	N/A	2.9	Y	Absent	NYTCL-8260HLW(14)

*Values in parentheses indicate holding time in days

Project Name: MCGUINNESS BOULEVARD
Project Number: Not Specified

Lab Number: L1428173
Report Date: 12/02/14

Container Information

Container ID	Container Type	Cooler	pH	Temp deg C	Pres	Seal	Analysis(*)
L1428173-10B	Vial water preserved	A	N/A	2.9	Y	Absent	NYTCL-8260HLW(14)
L1428173-10C	Vial water preserved	A	N/A	2.9	Y	Absent	NYTCL-8260HLW(14)
L1428173-10D	Plastic 2oz unpreserved for TS	A	N/A	2.9	Y	Absent	TS(7)
L1428173-10E	Amber 500ml unpreserved	A	N/A	2.9	Y	Absent	BE-TI(180),NYTCL-8270(14),AS-TI(180),BA-TI(180),AG-TI(180),AL-TI(180),CR-TI(180),NI-TI(180),TL-TI(180),CU-TI(180),PB-TI(180),SB-TI(180),SE-TI(180),ZN-TI(180),CO-TI(180),NYTCL-8081(14),V-TI(180),FE-TI(180),HG-T(28),MG-TI(180),MN-TI(180),NYTCL-8082(14),CA-TI(180),CD-TI(180),K-TI(180),NA-TI(180)
L1428173-11A	Vial MeOH preserved	A	N/A	2.9	Y	Absent	NYTCL-8260HLW(14)
L1428173-11B	Vial water preserved	A	N/A	2.9	Y	Absent	NYTCL-8260HLW(14)
L1428173-11C	Vial water preserved	A	N/A	2.9	Y	Absent	NYTCL-8260HLW(14)
L1428173-11D	Glass 250ml/8oz unpreserved	A	N/A	2.9	Y	Absent	BE-TI(180),NYTCL-8270(14),AS-TI(180),BA-TI(180),AG-TI(180),AL-TI(180),CR-TI(180),NI-TI(180),TL-TI(180),TS(7),CU-TI(180),PB-TI(180),SB-TI(180),SE-TI(180),ZN-TI(180),CO-TI(180),NYTCL-8081(14),V-TI(180),FE-TI(180),HG-T(28),MG-TI(180),MN-TI(180),NYTCL-8082(14),CA-TI(180),CD-TI(180),K-TI(180),NA-TI(180)
L1428173-12A	Vial MeOH preserved	A	N/A	2.9	Y	Absent	NYTCL-8260HLW(14)
L1428173-12B	Vial water preserved	A	N/A	2.9	Y	Absent	NYTCL-8260HLW(14)
L1428173-12C	Vial water preserved	A	N/A	2.9	Y	Absent	NYTCL-8260HLW(14)
L1428173-12D	Plastic 2oz unpreserved for TS	A	N/A	2.9	Y	Absent	TS(7)
L1428173-12E	Amber 500ml unpreserved	A	N/A	2.9	Y	Absent	BE-TI(180),NYTCL-8270(14),AS-TI(180),BA-TI(180),AG-TI(180),AL-TI(180),CR-TI(180),NI-TI(180),TL-TI(180),CU-TI(180),PB-TI(180),SB-TI(180),SE-TI(180),ZN-TI(180),CO-TI(180),NYTCL-8081(14),V-TI(180),FE-TI(180),HG-T(28),MG-TI(180),MN-TI(180),NYTCL-8082(14),CA-TI(180),CD-TI(180),K-TI(180),NA-TI(180)

*Values in parentheses indicate holding time in days

Project Name:	MCGUINNESS BOULEVARD	**Lab Number:**	L1428173
Project Number:	Not Specified	**Report Date:**	12/02/14

GLOSSARY

Acronyms

EDL - Estimated Detection Limit: This value represents the level to which target analyte concentrations are reported as estimated values, when those target analyte concentrations are quantified below the reporting limit (RL). The EDL includes any adjustments from dilutions, concentrations or moisture content, where applicable. The use of EDLs is specific to the analysis of PAHs using Solid-Phase Microextraction (SPME).

EPA - Environmental Protection Agency.

LCS - Laboratory Control Sample: A sample matrix, free from the analytes of interest, spiked with verified known amounts of analytes or a material containing known and verified amounts of analytes.

LCSD - Laboratory Control Sample Duplicate: Refer to LCS.

LFB - Laboratory Fortified Blank: A sample matrix, free from the analytes of interest, spiked with verified known amounts of analytes or a material containing known and verified amounts of analytes.

MDL - Method Detection Limit: This value represents the level to which target analyte concentrations are reported as estimated values, when those target analyte concentrations are quantified below the reporting limit (RL). The MDL includes any adjustments from dilutions, concentrations or moisture content, where applicable.

MS - Matrix Spike Sample: A sample prepared by adding a known mass of target analyte to a specified amount of matrix sample for which an independent estimate of target analyte concentration is available.

MSD - Matrix Spike Sample Duplicate: Refer to MS.

NA - Not Applicable.

NC - Not Calculated: Term is utilized when one or more of the results utilized in the calculation are non-detect at the parameter's reporting unit.

NI - Not Ignitable.

RL - Reporting Limit: The value at which an instrument can accurately measure an analyte at a specific concentration. The RL includes any adjustments from dilutions, concentrations or moisture content, where applicable.

RPD - Relative Percent Difference: The results from matrix and/or matrix spike duplicates are primarily designed to assess the precision of analytical results in a given matrix and are expressed as relative percent difference (RPD). Values which are less than five times the reporting limit for any individual parameter are evaluated by utilizing the absolute difference between the values; although the RPD value will be provided in the report.

SRM - Standard Reference Material: A reference sample of a known or certified value that is of the same or similar matrix as the associated field samples.

Footnotes

1 - The reference for this analyte should be considered modified since this analyte is absent from the target analyte list of the original method.

Terms

Total: With respect to Organic analyses, a 'Total' result is defined as the summation of results for individual isomers or Aroclors. If a 'Total' result is requested, the results of its individual components will also be reported. This is applicable to 'Total' results for methods 8260, 8081 and 8082.

Analytical Method: Both the document from which the method originates and the analytical reference method. (Example: EPA 8260B is shown as 1,8260B.) The codes for the reference method documents are provided in the References section of the Addendum.

Data Qualifiers

A - Spectra identified as "Aldol Condensation Product".

B - The analyte was detected above the reporting limit in the associated method blank. Flag only applies to associated field samples that have detectable concentrations of the analyte at less than ten times (10x) the concentration found in the blank. For MCP-related projects, flag only applies to associated field samples that have detectable concentrations of the analyte at less than ten times (10x) the concentration found in the blank. For DOD-related projects, flag only applies to associated field samples that have detectable concentrations of the analyte at less than ten times (10x) the concentration found in the blank AND the analyte was detected above one-half the reporting limit (or above the reporting limit for common lab contaminants) in the associated method blank. For NJ-Air-related projects, flag only applies to associated field samples that have detectable concentrations of the analyte above the reporting limit. For NJ-related projects (excluding Air), flag only applies to associated field samples that have detectable concentrations of the analyte, which was detected above the reporting limit in the associated method blank or above five times the reporting limit for common lab contaminants (Phthalates, Acetone, Methylene Chloride, 2-Butanone).

C - Co-elution: The target analyte co-elutes with a known lab standard (i.e. surrogate, internal standards, etc.) for co-extracted analyses.

D - Concentration of analyte was quantified from diluted analysis. Flag only applies to field samples that have detectable concentrations of the analyte.

E - Concentration of analyte exceeds the range of the calibration curve and/or linear range of the instrument.

Report Format: DU Report with 'J' Qualifiers

Project Name:	MCGUINNESS BOULEVARD	**Lab Number:**	L1428173
Project Number:	Not Specified	**Report Date:**	12/02/14

Data Qualifiers

G - The concentration may be biased high due to matrix interferences (i.e, co-elution) with non-target compound(s). The result should be considered estimated.

H - The analysis of pH was performed beyond the regulatory-required holding time of 15 minutes from the time of sample collection.

I - The lower value for the two columns has been reported due to obvious interference.

M - Reporting Limit (RL) exceeds the MCP CAM Reporting Limit for this analyte.

NJ - Presumptive evidence of compound. This represents an estimated concentration for Tentatively Identified Compounds (TICs), where the identification is based on a mass spectral library search.

P - The RPD between the results for the two columns exceeds the method-specified criteria.

Q - The quality control sample exceeds the associated acceptance criteria. For DOD-related projects, LCS and/or Continuing Calibration Standard exceedences are also qualified on all associated sample results. Note: This flag is not applicable for matrix spike recoveries when the sample concentration is greater than 4x the spike added or for batch duplicate RPD when the sample concentrations are less than 5x the RL. (Metals only.)

R - Analytical results are from sample re-analysis.

RE - Analytical results are from sample re-extraction.

S - Analytical results are from modified screening analysis.

J - Estimated value. The Target analyte concentration is below the quantitation limit (RL), but above the Method Detection Limit (MDL) or Estimated Detection Limit (EDL) for SPME-related analyses. This represents an estimated concentration for Tentatively Identified Compounds (TICs).

ND - Not detected at the method detection limit (MDL) for the sample, or estimated detection limit (EDL) for SPME-related analyses.

Report Format: DU Report with 'J' Qualifiers

Project Name:	MCGUINNESS BOULEVARD	**Lab Number:**	L1428173
Project Number:	Not Specified	**Report Date:**	12/02/14

REFERENCES

1 Test Methods for Evaluating Solid Waste: Physical/Chemical Methods. EPA SW-846. Third Edition. Updates I - IV, 2007.

30 Standard Methods for the Examination of Water and Wastewater. APHA-AWWA-WPCF. 18th Edition. 1992.

LIMITATION OF LIABILITIES

Alpha Analytical performs services with reasonable care and diligence normal to the analytical testing laboratory industry. In the event of an error, the sole and exclusive responsibility of Alpha Analytical shall be to re-perform the work at it's own expense. In no event shall Alpha Analytical be held liable for any incidental, consequential or special damages, including but not limited to, damages in any way connected with the use of, interpretation of, information or analysis provided by Alpha Analytical.

We strongly urge our clients to comply with EPA protocol regarding sample volume, preservation, cooling, containers, sampling procedures, holding time and splitting of samples in the field.

Certification Information

Last revised April 15, 2014

The following analytes are not included in our NELAP Scope of Accreditation:

Westborough Facility
EPA 524.2: Acetone, 2-Butanone (Methyl ethyl ketone (MEK)), Tert-butyl alcohol, 2-Hexanone, Tetrahydrofuran, 1,3,5-Trichlorobenzene, 4-Methyl-2-pentanone (MIBK), Carbon disulfide, Diethyl ether.
EPA 8260C: 1,2,4,5-Tetramethylbenzene, 4-Ethyltoluene, Iodomethane (methyl iodide), Methyl methacrylate, Azobenzene.
EPA 8330A/B: PETN, Picric Acid, Nitroglycerine, 2,6-DANT, 2,4-DANT.
EPA 8270D: 1-Methylnaphthalene, Dimethylnaphthalene,1,4-Diphenylhydrazine.
EPA 625: 4-Chloroaniline, 4-Methylphenol.
SM4500: Soil: Total Phosphorus, TKN, NO2, NO3.
EPA 9071: Total Petroleum Hydrocarbons, Oil & Grease.

Mansfield Facility
EPA 8270D: Biphenyl.
EPA 2540D: TSS
EPA TO-15: Halothane, 2,4,4-Trimethyl-2-pentene, 2,4,4-Trimethyl-1-pentene, Thiophene, 2-Methylthiophene, 3-Methylthiophene, 2-Ethylthiophene, 1,2,3-Trimethylbenzene, Indan, Indene, 1,2,4,5-Tetramethylbenzene, Benzothiophene, 1-Methylnaphthalene.

The following analytes are included in our Massachusetts DEP Scope of Accreditation, Westborough Facility:

Drinking Water
EPA 200.8: Sb,As,Ba,Be,Cd,Cr,Cu,Pb,Ni,Se,Tl; **EPA 200.7**: Ba,Be,Ca,Cd,Cr,Cu,Na; **EPA 245.1:** Mercury;
EPA 300.0: Nitrate-N, Fluoride, Sulfate; **EPA 353.2**: Nitrate-N, Nitrite-N; **SM4500NO3-F**: Nitrate-N, Nitrite-N; **SM4500F-C, SM4500CN-CE, EPA 180.1, SM2130B, SM4500Cl-D, SM2320B, SM2540C, SM4500H-B**
EPA 332: Perchlorate.
Microbiology: **SM9215B; SM9223-P/A, SM9223B-Colilert-QT, Enterolert-QT.**

Non-Potable Water
EPA 200.8: Al,Sb,As,Be,Cd,Cr,Cu,Pb,Mn,Ni,Se,Ag,Tl,Zn;
EPA 200.7: Al,Sb,As,Be,Cd,Ca,Cr,Co,Cu,Fe,Pb,Mg,Mn,Mo,Ni,K,Se,Ag,Na,Sr,Ti,Tl,V,Zn;
EPA 245.1, SM4500H,B, EPA 120.1, SM2510B, SM2540C, SM2340B, SM2320B, SM4500CL-E, SM4500F-BC, SM426C, SM4500NH3-BH, **EPA 350.1**: Ammonia-N, **LACHAT 10-107-06-1-B**: Ammonia-N, **SM4500NO3-F, EPA 353.2**: Nitrate-N**, SM4500NH3-BC-NES, EPA 351.1, SM4500P-E, SM4500P-B, E, SM5220D, EPA 410.4, SM5210B, SM5310C, SM4500CL-D, EPA 1664, SM14 510AC, EPA 420.1, SM4500-CN-CE, SM2540D.**
EPA 624: Volatile Halocarbons & Aromatics,
EPA 608: Chlordane, Toxaphene, Aldrin, alpha-BHC, beta-BHC, gamma-BHC, delta-BHC, Dieldrin, DDD, DDE, DDT, Endosulfan I, Endosulfan II, Endosulfan sulfate, Endrin, Endrin Aldehyde, Heptachlor, Heptachlor Epoxide, PCBs
EPA 625: SVOC (Acid/Base/Neutral Extractables), **EPA 600/4-81-045**: PCB-Oil.
Microbiology: **SM9223B-Colilert-QT; Enterolert-QT, SM9222D-MF**.

For a complete listing of analytes and methods, please contact your Alpha Project Manager.

NEW YORK CHAIN OF CUSTODY

ALPHA ANALYTICAL

Westborough, MA 01581
8 Walkup Dr.
TEL: 508-898-9220
FAX: 508-898-9193

Mansfield, MA 02048
320 Forbes Blvd
TEL: 508-822-9300
FAX: 508-822-3288

Service Centers
Mahwah, NJ 07430: 35 Whitney Rd, Suite 5
Albany, NY 12205: 14 Walker Way
Tonawanda, NY 14150: 275 Cooper Ave, Suite 105

Page 1 of 2

Date Rec'd in Lab: 11/21/14

ALPHA Job #: L1428173

Project Information
Project Name: McGuinness Boulevard
Project Location: 209-235 McGuinness Blvd
Project #: 29345.00
(Use Project name as Project #) ☐
Project Manager: Steve Kaplan
ALPHAQuote #:

Turn-Around Time
Standard ☑ Due Date: 12/2/14
Rush (only if pre approved) ☐ # of Days:

Client Information
Client: VHB
Address: 100 Motor Pkwy Suite 135, Hauppauge NY
Phone: 631-787-3400
Fax:
Email: Skaplan@vhb.com

Deliverables
☐ ASP-A ☐ ASP-B
☐ EQuIS (1 File) ☐ EQuIS (4 File)
☐ Other

Regulatory Requirement
☐ NY TOGS ☐ NY Part 375
☐ AWQ Standards ☐ NY CP-51
☐ NY Restricted Use ☐ Other
☐ NY Unrestricted Use
☐ NYC Sewer Discharge

Billing Information
☑ Same as Client Info
PO #

Disposal Site Information
Please identify below location of applicable disposal facilities.
Disposal Facility:
☐ NJ ☐ NY
☐ Other:

These samples have been previously analyzed by Alpha ☐

Other project specific requirements/comments:

Please specify Metals or TAL.

Sample Filtration
☐ Done
☐ Lab to do
Preservation
☐ Lab to do
(Please Specify below)

ALPHA Lab ID (Lab Use Only)	Sample ID	Collection Date	Collection Time	Sample Matrix	Sampler's Initials	TCL VOC	TCL SVOC	TAL Metals	PCB	Pesticides	Total TAL metals	Dissolved TAL metals		Sample Specific Comments	Total Bottle
28173-01	VHB SB-4 (0-2')	11-20-14	10:00	Soil	ALW	X	X	X	X	X					
-02	VHB SB-4 (14-16')	11-20-14	10:25	Soil	ALW	X	X	X	X	X					
-03	VHB SB-1 (0-2')	11-20-14	11:15	Soil	ALW	X	X	X	X	X					
-04	VHB SB-1 (14-16')	11-20-14	11:40	Soil	ALW	X	X	X	X	X					
-05	VHB SB-1 (8-10')	11-20-14	11:45	Soil	ALW	X	X	X	X	X					
-06	VHB SB-5 (0-2')	11-20-14	13:20	Soil	ALW	X	X	X	X	X					
-07	VHB SB-5 (14-16')	11-20-14	13:45	Soil	ALW	X	X	X	X	X					
-08	VHB GW-1	11-20-14	13:50	GW	ALW	X	X		X	X	X	X			
-09	VHB SB-3 (0-2')	11-20-14	14:40	Soil	ALW	X	X	X	X	X					
-10	VHB SB-3 (14-16')	11-20-14	14:55	Soil	ALW	X	X	X	X	X					
					Container Type										
					Preservative										

Preservative Code:
A = None
B = HCl
C = HNO_3
D = H_2SO_4
E = NaOH
F = MeOH
G = $NaHSO_4$
H = $Na_2S_2O_3$
K/E = Zn Ac/NaOH
O = Other

Container Code
P = Plastic
A = Amber Glass
V = Vial
G = Glass
B = Bacteria Cup
C = Cube
O = Other
E = Encore
D = BOD Bottle

Westboro: Certification No: MA935
Mansfield: Certification No: MA015

Relinquished By:	Date/Time	Received By:	Date/Time
[signature] ALW	11-21-14 1220	[signature] ALW	11-21-14 1220
[signature]	11-21-14 1855	Tom Tolen	11-21-14 1855
Tom Tolen	11-21-14 23:55	[signature]	11/21/14 23:55

Please print clearly, legibly and completely. Samples can not be logged in and turnaround time clock will not start until any ambiguities are resolved. BY EXECUTING THIS COC, THE CLIENT HAS READ AND AGREES TO BE BOUND BY ALPHA'S TERMS & CONDITIONS. (See reverse side.)

Form No: 01-25 HC (rev. 30-Sept-2013)

NEW YORK CHAIN OF CUSTODY

Westborough, MA 01581
8 Walkup Dr.
TEL: 508-898-9220
FAX: 508-898-9193

Mansfield, MA 02048
320 Forbes Blvd
TEL: 508-822-9300
FAX: 508-822-3288

Service Centers
Mahwah, NJ 07430: 35 Whitney Rd, Suite 5
Albany, NY 12205: 14 Walker Way
Tonawanda, NY 14150: 275 Cooper Ave, Suite 105

Page 2 of 2

Date Rec'd in Lab: 11/21/14

ALPHA Job #: L1428173

Project Information
Project Name: McGuinness Boulevard
Project Location: 209-235 McGuinness Blvd
Project #: 29345.00
(Use Project name as Project #) ☐
Project Manager: Steve Kaplan
ALPHAQuote #:

Turn-Around Time
Standard ☑ Due Date: 12/2/14
Rush (only if pre approved) ☐ # of Days:

Client Information
Client: VHB
Address: 100 Motor Pkwy Suite 135, Hauppauge, NY
Phone: 631-787 3400
Fax:
Email: skaplan@vhb.com

Deliverables
☐ ASP-A ☐ ASP-B
☐ EQuIS (1 File) ☐ EQuIS (4 File)
☐ Other

Regulatory Requirement
☐ NY TOGS ☐ NY Part 375
☐ AWQ Standards ☐ NY CP-51
☐ NY Restricted Use ☐ Other
☐ NY Unrestricted Use
☐ NYC Sewer Discharge

Billing Information
☑ Same as Client Info
PO #

Disposal Site Information
Please identify below location of applicable disposal facilities.
Disposal Facility:
☐ NJ ☐ NY
☐ Other:

These samples have been previously analyzed by Alpha ☐

Other project specific requirements/comments:

Please specify Metals or TAL.

Sample Filtration
☐ Done
☐ Lab to do
Preservation
☐ Lab to do
(Please Specify below)

ALPHA Lab ID (Lab Use Only)	Sample ID	Collection Date	Collection Time	Sample Matrix	Sampler's Initials	TCL VOC	TCL SVOC	TAL Metals	PCB	Pesticides	TO-15 VOCs	Helium		Sample Specific Comments	Total Bottle
28173-11	VHB SB-2 (0-2')	11-20-14	15:20	Soil	ALW	X	X	X	X	X					
-12	VHB SB-2 (14-16')	11-20-14	15:40	Soil	ALW	X	X	X	X	X					
-13	VHB SV-1	11-20-14	16:25	SV	ALW						X	X			
Container Type															
Preservative															

Preservative Code:
A = None
B = HCl
C = HNO_3
D = H_2SO_4
E = NaOH
F = MeOH
G = $NaHSO_4$
H = $Na_2S_2O_3$
K/E = Zn Ac/NaOH
O = Other

Container Code
P = Plastic
A = Amber Glass
V = Vial
G = Glass
B = Bacteria Cup
C = Cube
O = Other
E = Encore
D = BOD Bottle

Westboro: Certification No: MA935
Mansfield: Certification No: MA015

Relinquished By:	Date/Time	Received By:	Date/Time
ALW	11-21-14 1220	[illegible]	11-21-14 1220
[illegible]	11-21-14 1855	Tom Tolen	11-21-14 1855
Tom Tolen	11-21-14 23:55	[illegible]	11/21/14 23:55

Please print clearly, legibly and completely. Samples can not be logged in and turnaround time clock will not start until any ambiguities are resolved. BY EXECUTING THIS COC, THE CLIENT HAS READ AND AGREES TO BE BOUND BY ALPHA'S TERMS & CONDITIONS. (See reverse side.)

Form No: 01-25 HC (rev. 30-Sept-2013)

ALPHA ANALYTICAL

NEW YORK CHAIN OF CUSTODY

Westborough, MA 01581
8 Walkup Dr.
TEL: 508-898-9220
FAX: 508-898-9193

Mansfield, MA 02048
320 Forbes Blvd
TEL: 508-822-9300
FAX: 508-822-3288

Service Centers
Mahwah, NJ 07430: 35 Whitney Rd, Suite 5
Albany, NY 12205: 14 Walker Way
Tonawanda, NY 14150: 275 Cooper Ave, Suite 105

Date Rec'd in Lab: 11/21/14

ALPHA Job #: L1428173

Client Information
Client: VHB
Address: 100 Motor Pkwy Suite 135, Hauppauge NY
Phone: 631-787-3400
Fax:
Email: Skaplan@vhb.com

Project Information
Project Name: McGuinness Boulevard
Project Location: 209-235 McGuinness Blvd
Project #: 29345.00
(Use Project name as Project #) ☐
Project Manager: Steve Kaplan
ALPHAQuote #:

Turn-Around Time
Standard ☑ Due Date: 12/2/14
Rush (only if pre approved) ☐ # of Days:

Deliverables
☐ ASP-A ☐ ASP-B
☐ EQuIS (1 File) ☐ EQuIS (4 File)
☐ Other

Regulatory Requirement
☐ NY TOGS ☐ NY Part 375
☐ AWQ Standards ☐ NY CP-51
☐ NY Restricted Use ☐ Other
☐ NY Unrestricted Use
☐ NYC Sewer Discharge

Billing Information
☑ Same as Client Info
PO #

Disposal Site Information
Please identify below location of applicable disposal facilities.
Disposal Facility:
☐ NJ ☐ NY
☐ Other:

These samples have been previously analyzed by Alpha ☐

Other project specific requirements/comments:

Please specify Metals or TAL.

Sample Filtration
☐ Done
☐ Lab to do
Preservation
☐ Lab to do
(Please Specify below)

ALPHA Lab ID (Lab Use Only)	Sample ID	Collection Date	Collection Time	Sample Matrix	Sampler's Initials	TCL VOC	TCL SVOC	TAL Metals	PCB	Pesticides	Total TAL metals	Dissolved TAL metals		Sample Specific Comments	Total Bottle
28173-01	VHB SB-4 (0-2')	11-20-14		Soil	ALW	X	X	X	X	X					
-02	VHB SB-4 (14-16')	11-20-14		Soil	ALW	X	X	X	X	X					
-03	VHB SB-1 (0-2')	11-20-14		Soil	ALW	X	X	X	X	X					
-04	VHB SB-1 (14-16')	11-20-14		Soil	ALW	X	X	X	X	X					
-05	VHB SB-1 (8-10')	11-20-14		Soil	ALW	X	X	X	X	X					
-06	VHB SB-5 (0-2')	11-20-14		Soil	ALW	X	X	X	X	X					
-07	VHB SB-5 (14-16')	11-20-14		Soil	ALW	X	X	X	X	X					
-08	VHB GW-1	11-20-14		GW	ALW	X	X		X	X	X	X			
-09	VHB SB-3 (0-2')	11-20-14		Soil	ALW	X	X	X	X	X					
-10	VHB SB-3 (14-16')	11-20-14		Soil	ALW	X	X	X	X	X					
					Container Type										
					Preservative										

Preservative Code:
A = None
B = HCl
C = HNO_3
D = H_2SO_4
E = NaOH
F = MeOH
G = $NaHSO_4$
H = $Na_2S_2O_3$
K/E = Zn Ac/NaOH
O = Other

Container Code
P = Plastic
A = Amber Glass
V = Vial
G = Glass
B = Bacteria Cup
C = Cube
O = Other
E = Encore
D = BOD Bottle

Westboro: Certification No: MA935
Mansfield: Certification No: MA015

Relinquished By:	Date/Time	Received By:	Date/Time
[illegible] ALW	11-21-14 1220	[illegible] ALW	11-21-14 1220
[illegible]	11-21-14 1855	Tom Tolen	11-21-14 1855
Tom Tolen	11-21-14 23:55	[illegible]	11/21/14 23:55

Please print clearly, legibly and completely. Samples can not be logged in and turnaround time clock will not start until any ambiguities are resolved. BY EXECUTING THIS COC, THE CLIENT HAS READ AND AGREES TO BE BOUND BY ALPHA'S TERMS & CONDITIONS. (See reverse side.)

Form No: 01-25 HC (rev. 30-Sept-2013)

ALPHA ANALYTICAL

NEW YORK CHAIN OF CUSTODY

Service Centers
Mahwah, NJ 07430: 35 Whitney Rd, Suite 5
Albany, NY 12205: 14 Walker Way
Tonawanda, NY 14150: 275 Cooper Ave, Suite 105

Page 2 of 2

Date Rec'd in Lab: 11/21/14

ALPHA Job #: L1428173

Westborough, MA 01581
8 Walkup Dr.
TEL: 508-898-9220
FAX: 508-898-9193

Mansfield, MA 02048
320 Forbes Blvd
TEL: 508-822-9300
FAX: 508-822-3288

Project Information
Project Name: McGuinness Boulevard
Project Location: 209-235 McGuinness Blvd
Project # 29345.00
(Use Project name as Project #) ☐
Project Manager: Steve kaplan
ALPHAQuote #:

Turn-Around Time
Standard ☑ Due Date: 12/2/14
Rush (only if pre approved) ☐ # of Days:

Client Information
Client: VHB
Address: 100 Motor Pkwy
Suite 135, Hauppauge, NY
Phone: 631-787 3400
Fax:
Email: Skaplan@vhb.com

Deliverables
☐ ASP-A ☐ ASP-B
☐ EQuIS (1 File) ☐ EQuIS (4 File)
☐ Other

Billing Information
☑ Same as Client Info
PO #

Regulatory Requirement
☐ NY TOGS ☐ NY Part 375
☐ AWQ Standards ☐ NY CP-51
☐ NY Restricted Use ☐ Other
☐ NY Unrestricted Use
☐ NYC Sewer Discharge

Disposal Site Information
Please identify below location of applicable disposal facilities.
Disposal Facility:
☐ NJ ☐ NY
☐ Other:

These samples have been previously analyzed by Alpha ☐

Other project specific requirements/comments:

Please specify Metals or TAL.

Sample Filtration
☐ Done
☐ Lab to do
Preservation
☐ Lab to do
(Please Specify below)

ALPHA Lab ID (Lab Use Only)	Sample ID	Collection Date	Collection Time	Sample Matrix	Sampler's Initials	TCL VOC	TCL SVOC	TAL Metals	PCB	Pesticides	TO-15 VOCs	Helium		Sample Specific Comments	Total Bottle
28173-11	VHB SB-2 (0-2')	11-20-14		Soil	ALW	X	X	X	X	X					
-12	VHB SB-2 (14-16')	11-20-14		Soil	ALW	X	X	X	X	X					
-13	VHB SV-1	11-20-14		SV	ALW						X	X			

Preservative Code	Container Code
A = None	P = Plastic
B = HCl	A = Amber Glass
C = HNO_3	V = Vial
D = H_2SO_4	G = Glass
E = NaOH	B = Bacteria Cup
F = MeOH	C = Cube
G = $NaHSO_4$	O = Other
H = $Na_2S_2O_3$	E = Encore
K/E = Zn Ac/NaOH	D = BOD Bottle
O = Other	

Westboro: Certification No: MA935
Mansfield: Certification No: MA015

Container Type
Preservative

Relinquished By:	Date/Time	Received By:	Date/Time
ALW	11-21-14 1220	AAL	11-21-14 1220
[illegible]	11-21-14 1855	Tom Tolen	11-21-14 1855
Tom Tolen	11-21-14 23:55	[illegible]	11/21/14 23:55

Please print clearly, legibly and completely. Samples can not be logged in and turnaround time clock will not start until any ambiguities are resolved. BY EXECUTING THIS COC, THE CLIENT HAS READ AND AGREES TO BE BOUND BY ALPHA'S TERMS & CONDITIONS. (See reverse side.)

Form No: 01-25 HC (rev. 30-Sept-2013)

Appendix C

Limited Phase II ESA, PVE Sheffler March 25, 2014

PVE Sheffler

Civil Engineering
Surveying
Land Planning
Environmental
Municipal Services

March 25, 2014

Mr. Matthew Lembo
Stellar Management
156 William Street, 10th Floor
New York, NY 10038

Re: **Limited Phase II Environmental Investigation**; 211-235 McGuinness Boulevard, Brooklyn, New York
PVE Sheffler File #500008

Dear Mr. Lembo:

PVE Sheffler has completed a Phase II Investigation for the above-referenced property (Figure 1). Below is a summary of field activities, analytical data and recommendations.

1.0 INTRODUCTION

PVE Sheffler, LLC reviewed a Phase I Environmental Site Assessment (ESA) prepared by Langan Engineering (Langan) dated January 22, 2014 for the above referenced property. Several Recognized Environmental Conditions (RECs) were identified during preparation of this report, which indicate historical operations on and near the subject property may have resulted in subsurface contamination. Due to the historic uses of the site, a work plan for evaluation of subsurface conditions was prepared and submitted to your attention. This work plan included the completion of 5 soil borings and installation of 3 groundwater monitoring wells for purposes of collection and analysis of soil and groundwater samples. In addition, sub-grade soil vapor samples were proposed from 3 locations to evaluate the potential for vapor intrusion on site due to contaminated soil or groundwater.

1.1 Historical & Database Research

The subject property consists of two tax lots: Lot 20, located at 211-235 McGuinness Boulevard and Lot 42, located at 308 Eckford Street. Lot 20 is improved with three connected one-story commercial buildings containing three tenants and a vacant space and an associated asphalt parking lot. Lot 42, the western portion of the Subject Property, is improved with a seven-story apartment building containing 43 residential units with associated asphalt parking lot.

PVE Sheffler utilized a database report for the above-referenced property to help determine potential contaminant sources. Lot 20 was historically developed as a porcelain manufacturing facility dating from 1887, to at least 1916. Activities on-site included a machine shop, mixing and molding, porcelain painting, coal storage, and operation of numerous kilns. During the porcelain manufacturing process, various metals may have been

used during the glazing processes. The subject property was later developed as an automobile service facility, which has been operating on the parcel under different ownership since at least 1942. Two gasoline tanks are identified on the 1942 and 1951 Sanborn Fire Insurance Maps, beneath the current Pep Boys Service Bay Area (Figure 2). Numerous aboveground storage tanks (ASTs) containing motor oil, used oil, and used oil filters were identified throughout the Pep Boys service bay area during recent site inspections. Lot 20 also maintains a 3,000-gallon concrete- encased heating oil tank (improperly registered with NYSDEC as an AST) and two 550-gallon heating oil underground storage tanks (USTs).

A petroleum release (#93-03423) was reported to NYSDEC on June 15, 1993 for the Hess gasoline station (#32516) located immediately north of Lot 20. This release was effectively remediated and the spill was closed by NYSDEC on April 20, 2007. The presence of residual subsurface soil or groundwater contamination cannot be ruled out.

2.0 FIELD ACTIVITIES

2.1 Vapor

On February 25, 2014, three sub-slab vapor sampling points were installed (Figure 3). Sampling points were installed by drilling through the 6.5-7” thick concrete slab using a hammer drill and 5/8” drill bit. Polyethylene tubing was inserted to the bottom of the borehole and the sealed at the surface using non-volatile organic compound (VOC) emitting clay.

The tubing was purged at 0.2 L/min using a peristaltic pump; each location was purged between 12 seconds (1 tubing volume) and 36 seconds (3 tubing volumes). Afterwards, the tubing was attached directly to a certified clean Summa canister with a regulator set to collect a sample over a 2-hour period. The sample was submitted to a NYSDOH ELAP-certified laboratory for analysis of VOCs via USEPA Method TO-15. The tubing was removed following sample collection and the holes in the concrete were patched with a concrete/sand mix.

2.2 Soil

Following a public and private utility mark out, on March 3, 2014, four soil borings were completed in order to collect subsurface soil samples (Figure 3). One of the proposed boring locations could not be drilled due to restricted access by the current tenant. Three (3) soil borings were completed through the use of a track-mounted Geoprobe™ unit equipped with 4-foot long, 1 ¾-inch diameter core barrels (macro-cores) fitted with acetate liners and one (1) soil boring was completed through the use of hand tools. Borings were sampled continuously from the ground surface to a maximum depth of 16 feet below grade. The project geologist recorded detailed logs of each boring, which are attached to this report and summarized below. In general, each boring consisted of brown sand with increasing concentrations of dark brown clay with increasing depth.

Soil samples were screened in the field for the presence of VOCs using a photoionization detector (PID) and headspace techniques. One soil sample from each boring was submitted to a NYSDOH-approved laboratory for analysis of Metals, Pesticides, Herbicides, Polychlorinated biphenyls (PCBs), VOCs and semi-volatile organic compounds (SVOCs) via their respective EPA methods.

Boring GB-1 was advanced to 16 feet below land surface (bls). Groundwater was encountered at a depth of approximately 14 feet. The soil encountered consisted predominately of brown sand and clay. PID readings were 2.9-5.3 ppm. A sample was collected from the 14-16 feet interval.

Boring GB-2 was advanced to 16 feet bls. Groundwater was encountered at a depth of approximately 12 feet. The soil encountered consisted predominately of light brown sand and clay. PID readings were 1.7 -5.7 ppm. A sample was collected from the 12-14 feet interval.

Boring GB-3 was advanced to 16 feet bls. Groundwater was encountered at a depth of approximately 14 feet. The soil encountered consisted predominately of light brown sand and clay. A dark black layer of possibly ash was encountered at 7 feet. PID readings were 2.2-6.2 ppm. A sample was collected from the 14-16 feet interval.

Boring B-1 was advanced to 10 feet bls using a slide hammer and macro-core. Groundwater was not encountered. The soil encountered consisted predominately of light brown sand. Recovery from 0 to 8' was extremely poor. PID readings were 4.0 ppm. A sample was collected from the 8.5 to 10' feet interval.

2.3 Groundwater

The three soil boring locations were converted to monitoring wells on March 3, 2014 (Figure 3). The track-mounted Geoprobe™ unit equipped with 4-foot long, 3 ¼ -inch diameter core barrels created boreholes for the installation of 2-inch diameter groundwater monitoring wells. Wells were constructed to a depth of 15.5-16.5 feet bls with 5 feet of Schedule 40 PVC riser and 10 feet of 20-slot PVC screen. A sand filter was installed in the annular space of each boring between the well and the surrounding soil from the bottom of the boring to a depth of 2-4 feet below grade. A 1-foot bentonite seal was placed at the surface (see attached well diagrams), and the borehole was backfilled to grade with native material. Flush-to-grade protective casings were placed around each monitoring well. After well development, one groundwater sample was obtained from each of the three wells using low-flow sampling procedures to evaluate groundwater quality. Samples were analyzed for TCL VOCs,TCL SVOCs,TAL Metals, PCBs and Pesticides.

3.0 RESULTS

3.1 Vapor

Soil vapor results are summarized in Table 1. Analytical reports are attached.

VOCs

Several VOCs were detected at concentrations exceeding the guidance values per New York State Department of Health (NYSDOH) "Guidance for Evaluating Soil Vapor Intrusion in the State of New York," October 2006, Appendix C.1 NYSDOH 2003: Study of Volatile Organic Chemicals in Air of Fuel Oil Heated Homes, 1997-2003, Indoor Air- Median Results.

Compounds detected in vapor samples at concentrations exceeding Indoor Air- Median parameters are summarized below:

- SV-1
  - 1,2,4-Trimethylbenzene (3.8 µg/m3)
  - 1,3,5-Trimethylbenzene (1.2 µg/m3)
  - Acetone (41 µg/m3)
  - Benzene (2.7 µg/m3)
  - Chloroform (0.5 µg/m3)
  - Cyclohexane (2.7 µg/m3)
  - Ethylbenzene (1.9 µg/m3)
  - Freon 12 (2.9 µg/m3)
  - Hexane (5.5 µg/m3)
  - m&p-Xylene (5.6 µg/m3)
  - Methylene Chloride (2.2 µg/m3)
  - o-Xylene (1.4 µg/m3)
  - Styrene (0.48 µg/m3)

- SV-2
  - 1,2,4-Trimethylbenzene (5.4 µg/m3)
  - 1,3,5-Trimethylbenzene (1.9 µg/m3)
  - 4-ethyltoluene (3.2 µg/m3)
  - Acetone (310 µg/m3)*
  - Benzene (3,200 µg/m3)*
  - Cyclohexane (9,100 µg/m3)*
  - Freon 12 (2.7 µg/m3)
  - Heptane (2,400 µg/m3)*
  - Hexane (3,900 µg/m3)*
  - Methylene Chloride (6 µg/m3)
  - Toluene (90 µg/m3)

- SV-3
  - 1,2,4-Trimethylbenzene (5.8 µg/m3)
  - 1,3,5-Trimethylbenzene (1.7 µg/m3)
  - Acetone (790 µg/m3)*
  - Benzene (4.8 µg/m3)
  - Chloroform (27 µg/m3)*
  - Cyclohexane (66 µg/m3)
  - Ethylbenzene (18 µg/m3)
  - Freon 12 (2.7 µg/m3)
  - Heptane (9.6 µg/m3)
  - m&p-Xylene (35 µg/m3)
  - Methyl Ethyl Ketone (22 µg/m3)
  - o-Xylene (6.4 µg/m3)
  - Tetrachloroethylene (2.2 µg/m3)
  - Toluene (69 µg/m3)
  - Trichlorothene (0.71 µg/m3)

* Compounds detected at concentrations exceeding NYSDOH "Guidance for Evaluating Soil Vapor Intrusion in the State of New York," October 2006, Appendix C.1 NYSDOH 2003: Study of Volatile Organic Chemicals in Air of Fuel Oil Heated Homes, 1997-2003, **Indoor Air- 99th Percentile Result.**

3.2 Soil

Analytical results for soil samples are summarized in Tables 2-6. Analytical reports are attached.

Metals

Metals were detected in all four of the soil borings; none of which exceeded Unrestricted Use Soil Cleanup Objectives (UUSCOs) as per 6NYCRR Part 375.

VOCs

VOCs were detected in two of the four soil samples collected. The samples collected from GB-1 contained VOCs at concentrations exceeding UUSCOs per Part 375; however, the concentrations did not exceed Restricted Residential standards (RRSCOs). VOCs were detected in GB-3 but did not exceed applicable standards. Soil samples collected from GB-2 and B-1 did not contain detectable concentrations of VOCs.

Soil sample results exceeding Part 375 parameters are summarized below:

- GB-1
  - Acetone (139 ug/kg)

SVOCs

None of the soil samples contained detectable concentrations of SVOCs.

Chlorinated Pesticides and Herbicides

None of the soil samples contained detectable concentrations of pesticides or herbicides.

PCBs

None of the soil samples contained detectable concentrations of PCBs.

3.3 Groundwater

Analytical results for groundwater samples are summarized in Tables 7-11. Analytical reports are attached.

Metals

Metals were detected in all three of the groundwater samples at concentrations exceeding Class GA groundwater standards as per 6NYCRR Part 703.5.

Groundwater samples exceeding Part 703.5 are summarized below:

- MW-1
  - Manganese (4.44 mg/L)
- MW-2
  - Manganese (2.43 mg/L)
- MW-3
  - Manganese (1.36 mg/L)

VOCs

None of the groundwater samples contained detectable concentrations of VOCs.

SVOCs

None of the groundwater samples contained detectable concentrations of SVOCs.

Chlorinated Pesticides

None of the groundwater samples contained detectable concentrations of pesticides.

PCBs

None of the groundwater samples contained detectable concentrations of PCBs.

4.0 CONCLUSIONS

1. VOCs detected in the sub-slab vapor samples exceed both the Median Results and 99th Percentile Results described in NYSDOH guidance documents. This suggests a source of petroleum hydrocarbons to be present in the subsurface in the vicinity of this sample location. Potential sources include nearby USTs or the former spill at the Hess station. Alternatively, wastes generated by current site operations (Pep Boys), if handled improperly can result in contaminated soil and or groundwater and could explain the presence of contaminated vapors beneath the northern portion of the property.

2. Soil samples contained no concentrations of VOCs, SVOCs, Metals, Pesticides or Herbicides with the exception of one VOC (acetone) at concentrations exceeding 6NYCRR Part 375 standards.

3. Groundwater at the subject property contained no concentrations of VOCs, SVOCs, Metals, Pesticides or Herbicides with the exception of Manganese, exceeding 6NYCRR Part 703.5.

5.0 RECOMMENDATIONS

1. A potential vapor intrusion condition exists at the subject property. Future development will require installation of a sub-slab depressurization system and vapor barrier.

2. Collection and analysis of additional soil and groundwater samples will be necessary to fully characterize the property, including the area of former ceramics operations, and in the vicinity of suspected USTs identified on historical Sanborn Fire Insurance maps.

3. Underground fuel storage tanks may be present beneath the current Pep Boys Service Bay, which will require closure in accordance with NYSDEC procedures.

4. The 3,000-gallon heating oil tank should be registered with NYSDEC as an UST since the exterior of the tank cannot be visually inspected.

Feel free to contact us if you have any questions.

Sincerely,

PVE SHEFFLER, LLC

Christopher B. Brown, CPG
Senior Hydrogeologist

CBB/tla

attachments

cc: Paul Pullo

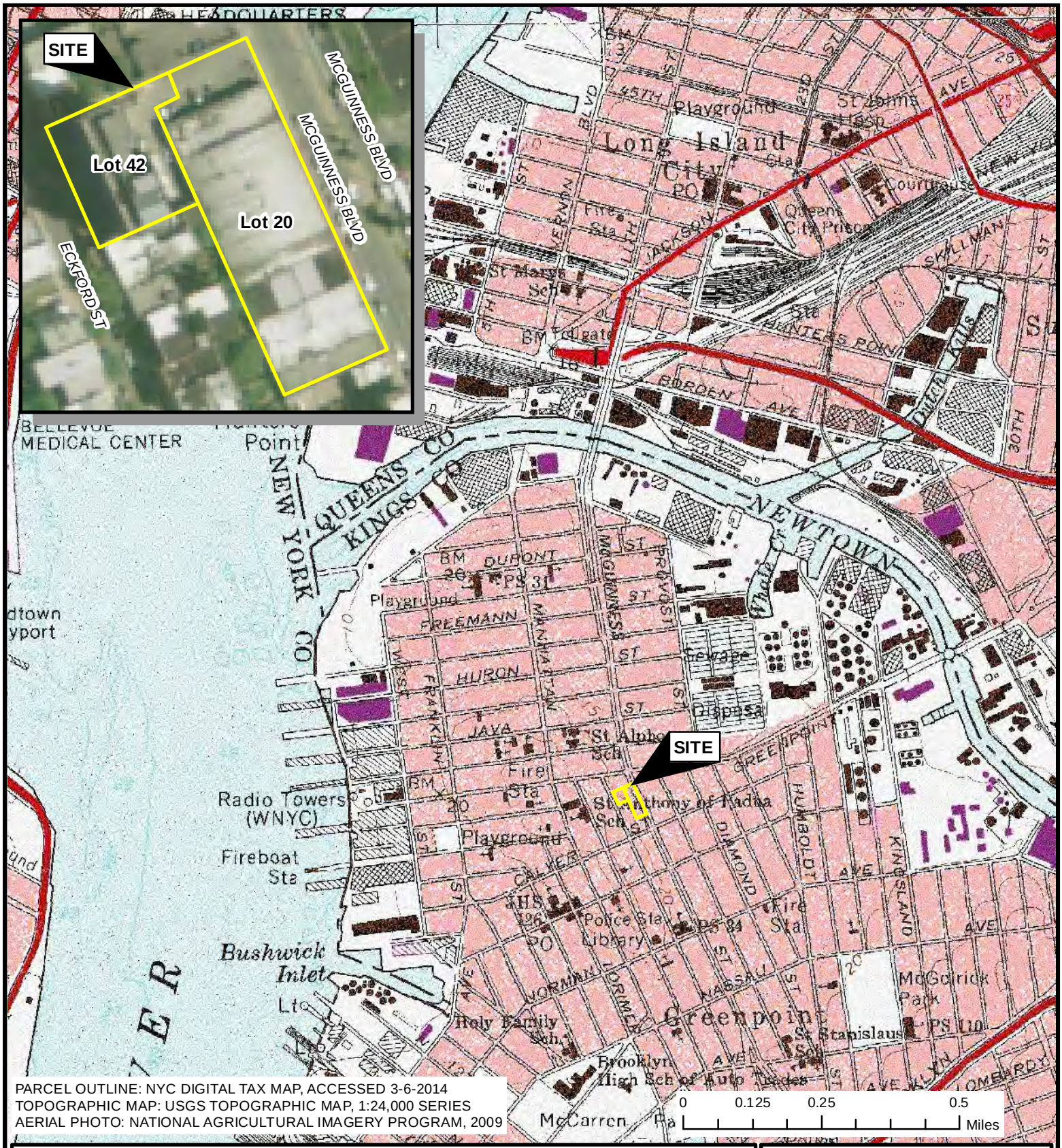

PARCEL OUTLINE: NYC DIGITAL TAX MAP, ACCESSED 3-6-2014
TOPOGRAPHIC MAP: USGS TOPOGRAPHIC MAP, 1:24,000 SERIES
AERIAL PHOTO: NATIONAL AGRICULTURAL IMAGERY PROGRAM, 2009

SITE LOCATION MAP

211-235 McGUINNESS BLVD
BOROUGH OF BROOKLYN
KINGS COUNTY, NEW YORK

FIGURE 1

DATE:	03/06/2014
SCALE:	As Indicated
PROJECT NUMBER:	500008

ALL LOCATIONS APPROXIMATE

PVE Sheffler

One Civic Center Plaza
Suite 501
Poughkeepsie, New York 12601
Phone: (845) 454-2544
Fax: (845) 454-2655

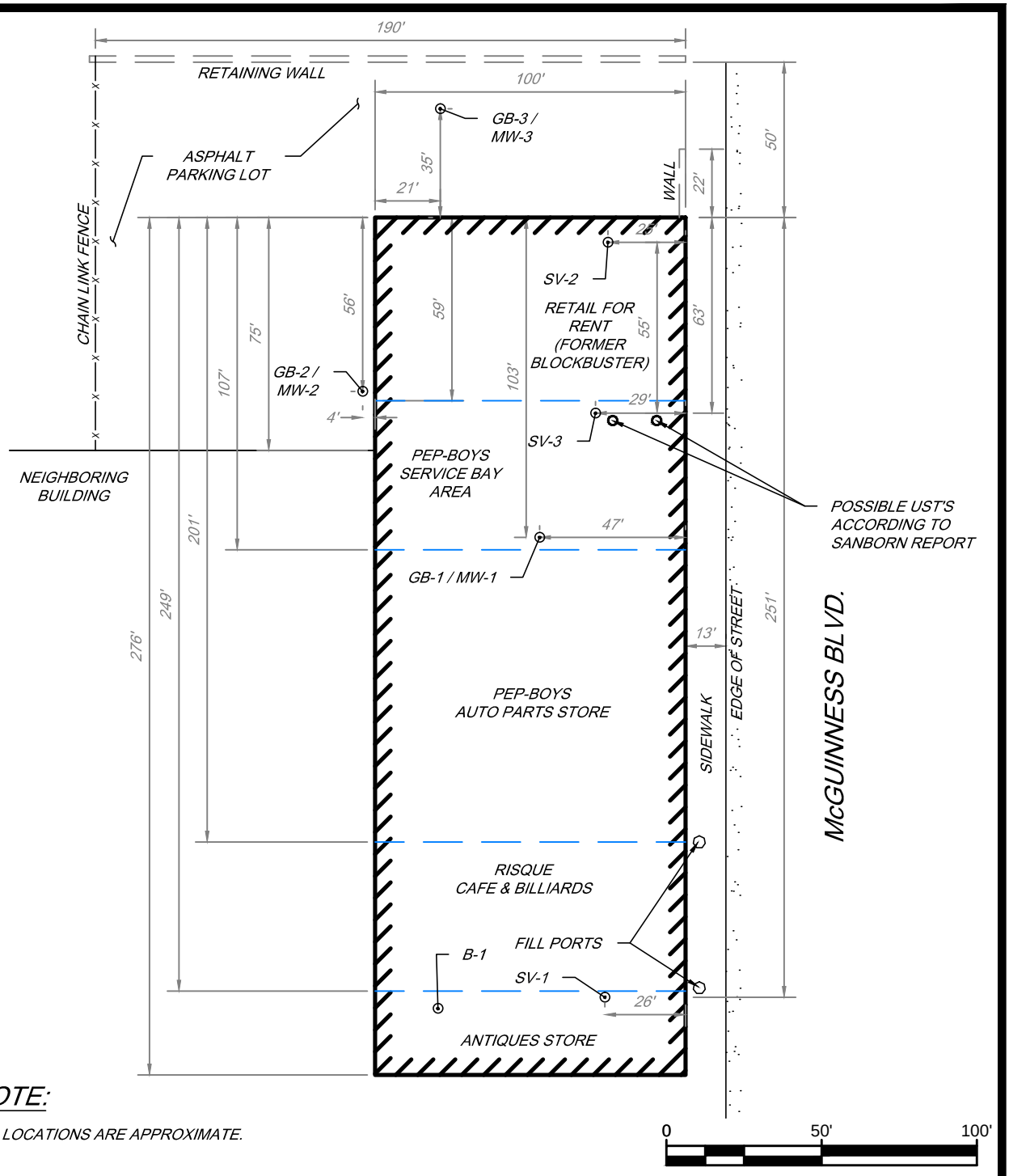

NOTE:

ALL LOCATIONS ARE APPROXIMATE.

SAMPLE LOCATIONS

211-235 McGUINNESS BLVD.

BROOKLYN, NEW YORK

PVE Sheffler

Waterfront Corporate Park III, Suite 101
2000 Georgetowne Drive
Sewickley, PA 15143-8992
Phone: 724-444-1100
Fax: 724-444-1104
E-mail: info@pvesheffler.com

DATE:	03.06.14
SCALE:	1"=50'
PROJECT NUMBER:	500008

FIGURE 3

Table 1. **Volatile Organic Compounds (VOCs) in Vapor Samples**
USEPA TO-15; collected **March 3, 2014**
211-235 McGuinness Blvd, Brooklyn, New York
PVE Sheffler File #500008

		NYSDOH 2003 Median Concentration (1)	NYSDOH 2003 99th Percentile Concentration (2)	Sample Identification								
				SV-1			SV-2			SV-3		
				sub-slab sample (antiques store)			sub-slab sample (subgrade basement)			sub-slab sample (Pep Boys service area)		
Constituent	CAS number			Result	Detection Limit	Qualifier	Result	Detection Limit	Qualifier	Result	Detection Limit	Qualifier
1,1,1-Trichloroethane	71-55-6	0.3	41	ND<	0.83		ND<	0.83		ND<	0.83	
1,1,2,2-Tetrachloroethane	79-34-5	<0.25	0.8	ND<	1		ND<	1		ND<	1	
1,1,2-Trichloroethane	79-00-5	<0.25	1	ND<	0.83		ND<	0.83		ND<	0.83	
1,1-Dichloroethane	75-34-3	<0.25	0.4	ND<	0.62		ND<	0.62		ND<	0.62	
1,1-Dichloroethene	75-35-4	<0.25	6.3	ND<	0.6		ND<	0.6		ND<	0.6	
1,2,4-Trichlorobenzene	120-82-1	<0.25	26	ND<	1.1		ND<	1.1		ND<	1.1	
1,2,4-Trimethylbenzene	95-63-6	1.9	35	**3.8**	0.75		**5.4**	0.75		**5.8**	0.75	
1,2-Dibromoethane	106-93-4	<0.25	<0.25	ND<	1.2		ND<	1.2		ND<	1.2	
1,2-Dichlorobenzene	95-50-1	<0.25	2.3	ND<	0.92		ND<	0.92		ND<	0.92	
1,2-Dichloroethane	107-06-2	<0.25	0.4	ND<	0.62		ND<	0.62		ND<	0.62	
1,2-Dichloropropane	78-87-5	<0.25	9	ND<	0.7		ND<	0.7		ND<	0.7	
1,3,5-Trimethylbenzene	108-67-8	0.6	25	**1.2**	0.75		**1.9**	0.75		**1.7**	0.75	
1,3-butadiene	106-99-0	NA	NA	ND<	0.34		ND<	0.34		ND<	0.34	
1,3-Dichlorobenzene	541-73-1	<0.25	1.6	ND<	0.92		ND<	0.92		ND<	0.92	
1,4-Dichlorobenzene	106-46-7	<0.25	25	ND<	0.92		ND<	0.92		ND<	0.92	
1,4-Dioxane	123-91-1	NA	NA	ND<	1.1		ND<	1.1		1	1.1	J
2,2,4-trimethylpentane	540-84-1	NA	NA	1.9	0.71		690	570		3.6	0.71	
4-ethyltoluene	622-96-8	2.1	120	1.5	0.75		**3.2**	0.75		1.6	0.75	
Acetone	67-64-1	21	200	**41**	7.2		**310**	580	J	**790**	200	
Allyl chloride	107-05-1	NA	NA	ND<	0.48		ND<	0.48		ND<	0.48	
Benzene	71-43-2	2.1	120	**2.7**	0.49		**3,200**	390		**4.8**	0.49	
Benzyl chloride	100-44-7	NA	NA	ND<	0.88		ND<	0.88		ND<	0.88	
Bromodichloromethane	75-27-4	NA	NA	ND<	1		ND<	1		1.4	1	
Bromoform	75-25-2	NA	NA	ND<	1.6		ND<	1.6		ND<	1.6	
Bromomethane	74-83-9	<0.25	3.2	ND<	0.59		ND<	0.59		ND<	0.59	
Carbon disulfide	75-15-0	NA	NA	0.38	0.47	J	7	4.7		11	4.7	
Carbon tetrachloride	56-23-5	<0.25	3.2	ND<	0.96		ND<	0.96		ND<	0.96	
Chlorobenzene	108-90-7	<0.25	3.2	ND<	0.7		ND<	0.7		ND<	0.7	
Chloroethane	75-00-3	<0.25	0.9	ND<	0.4		ND<	0.4		ND<	0.4	
Chloroform	67-66-3	<0.25	13	**0.5**	0.74	J	ND<	0.74		**27**	7.4	
Chloromethane	74-87-3	0.5	14	ND<	0.31		ND<	0.31		ND<	0.31	
cis-1,2-Dichloroethene	156-59-2	<0.25	4.6	ND<	0.6		ND<	0.6		ND<	0.6	
cis-1,3-Dichloropropene	10061-01-5	<0.25	2.1	ND<	0.69		ND<	0.69		ND<	0.69	
Cyclohexane	110-82-7	0.8	88	**2.7**	0.52		**9,100**	870		**66**	5.2	
Dibromochloromethane	124-48-1	NA	NA	ND<	1.3		ND<	1.3		ND<	1.3	
Ethyl acetate	141-78-6	NA	NA	ND<	0.92		ND<	0.92		ND<	0.92	
Ethylbenzene	100-41-4	1	26	**1.9**	0.66		ND<	0.66		**18**	6.6	
Freon 11	75-69-4	NA	NA	2.3	0.86		1.5	0.86		17	8.6	
Freon 113	76-13-1	NA	NA	ND<	1.2		ND<	1.2		ND<	1.2	
Freon 114	76-14-2	<0.25	23	ND<	1.1		ND<	1.1		ND<	1.1	
Freon 12	75-71-8	<0.25	180	**2.9**	0.75		**2.7**	0.75		**2.7**	0.75	
Heptane	142-82-5	2.8	72	1.6	0.62		**2,400**	500		**9.6**	6.2	
Hexachloro-1,3-butadiene	87-68-3	<0.25	29	ND<	1.6		ND<	1.6		ND<	1.6	
Hexane	110-54-3	1.6	93	**5.5**	0.54		**3,900**	430		**41**	5.4	
Isopropyl alcohol	67-63-0	NA	NA	6	3.7		ND<	0.37		ND<	0.37	
m&p-Xylene	79601-23-1	1.5	46	**5.6**	1.3		ND<	1.3		**35**	13	
Methyl Butyl Ketone	591-78-6	0.3	16	ND<	1.2		ND<	1.2		ND<	1.2	
Methyl Ethyl Ketone	78-93-3	3.4	79	2	0.9		ND<	0.9		**22**	9	
Methyl Isobutyl Ketone	108-10-1	0.3	16	ND<	1.2		ND<	1.2		ND<	1.2	
Methyl tert-butyl ether	1634-04-4	0.8	230	ND<	0.55		ND<	0.55		ND<	0.55	
Methylene chloride	75-09-2	1.4	310	**2.2**	0.53		**6**	0.53		1.1	0.53	
o-Xylene	95-47-6	1.1	32	**1.4**	0.66		ND<	0.66		**6.4**	0.66	
Propylene	115-07-1	NA	NA	ND<	0.26		ND<	0.26		ND<	0.26	
Styrene	100-42-5	0.3	6.2	**0.48**	0.65	J	ND<	0.65		ND<	0.65	

Table 1. **Volatile Organic Compounds (VOCs) in Vapor Samples**
USEPA TO-15; collected **March 3, 2014**
211-235 McGuinness Blvd, Brooklyn, New York
PVE Sheffler File #500008

		NYSDOH 2003 Median Concentration (1)	NYSDOH 2003 99th Percentile Concentration (2)	Sample Identification								
				SV-1			SV-2			SV-3		
				sub-slab sample (antiques store)			sub-slab sample (subgrade basement)			sub-slab sample (Pep Boys service area)		
Constituent	CAS number			Result	Detection Limit	Qualifier	Result	Detection Limit	Qualifier	Result	Detection Limit	Qualifier
Tetrachloroethylene	127-18-4	0.3	20	ND<	1		ND<	1		**2.2**	1	
Tetrahydrofuran	109-99-9	<0.25	19	ND<	0.45		ND<	0.45		ND<	0.45	
Toluene	108-88-3	9.6	300	8.1	0.57		**90**	5.7		**69**	5.7	
trans-1,2-Dichloroethene	156-60-5	NA	NA	ND<	0.6		ND<	0.6		ND<	0.6	
trans-1,3-Dichloropropene	10061-02-6	<0.25	<0.25	ND<	0.69		ND<	0.69		ND<	0.69	
Trichloroethene	79-01-6	<0.25	7.4	ND<	0.82		ND<	0.82		**0.71**	0.82	J
Vinyl acetate	108-05-4	NA	NA	ND<	0.54		ND<	0.54		ND<	0.54	
Vinyl Bromide	593-60-2	NA	NA	ND<	0.67		ND<	0.67		ND<	0.67	
Vinyl chloride	75-01-4	<0.25	0.8	ND<	0.39		ND<	0.39		ND<	0.39	

Notes:

All units are $\mu g/m^3$ unless otherwise noted

IA prefix represents ambient indoor air samples

Boldface type indicates exceedance of NYSDOH median concentration, October 2006, Appendix C

Boldface and highlighted indicates exceedance of NYSDOH 99th percentile concentration, October 2006, Appendix C

ND = Not detected at the reporting limit

J = Analyte detected at or below quantitation limits

B =Compound found in associated method blank

E = Estimated, concentration exceeds calibration range

S = Spike recovery outside accepted recovery limits

1- NYSDOH "Guidance for Evaluating Soil Vapor Intrusion in the State of New York," October 2006, Appendix C.1 NYSDOH 2003: Study of Volatile Organic Chemicals in Air of Fuel Oil Heated Homes, 1997-2003, Indoor Air- Median Result

2- NYSDOH "Guidance for Evaluating Soil Vapor Intrusion in the State of New York," October 2006, Appendix C.1 NYSDOH 2003: Study of Volatile Organic Chemicals in Air of Fuel Oil Heated Homes, 1997-2003, Indoor Air- 99th Percentile Result

NA = Analyte not analyzed in NYSDOH 2003 study

Table 2. **Part 375 Metals (ICP)** in **Soil Boring Samples;** USEPA Method 6010C, 3050, 7196, 9014 & 7471B collected **March 3, 2014**; 211-235 McGuinness Blvd., Brooklyn, New York 11222
PVE Sheffler File #500008

Chemical Constituent	NYSDEC Limit[1]	NYSDEC Limit[2]	Sample ID GB -1 14-16'	Sample ID GB-2 12-14'	Sample ID GB-3 14-16'	Sample ID B-1 8.5-10'
Metals						
Arsenic	13	16	3.35	3.17	3.55	2.75
Barium	350	400	20.8	27.6	32.7	21.8
Beryllium	7.2	72	ND<0.581	ND<0.647	ND<0.662	ND<0.537
Cadmium	2.5	4.3	ND<0.581	ND<0.647	ND<0.662	ND<0.537
Chromium	30*	36*	26.3	14.5	18.8	12.3
Copper	50	270	10.2	9.61	8.5	7.85
Cyanide, Total	27	27	ND<0.57	ND<0.59	ND<0.59	ND<0.55
Chrome, Hexavalent	1	110	ND<1.2	ND<1.2	ND<1.2	ND<1.1
Lead	63	400	3.14	7.1	3.62	3.36
Manganese	1600	2000	167	171	127	133
Mercury	0.18	0.81	ND<0.0190	ND<0.0197	ND<0.0234	ND<0.0181
Nickel	30	310	20.6	9.35	10.3	10.5
Selenium	3.9	180	ND<1.16	ND<1.29	ND<1.32	ND<1.07
Silver	2	180	ND<1.16	ND<1.29	ND<1.32	ND<1.07
Zinc	109	10000	30.4	28.8	28.7	25.7

Notes:

1 – Standards are for soils according 6NYCRR Part 375, *Unrestricted Use Soil Cleanup Objectives* ;

2 - Standards are for soils according 6NYCRR Part 375, *Restricted-Residential Use Soil Cleanup Objectives* ;

* NYSDEC limit for trivalent Chromium is listed;

Standards are for respective Soil Cleanup Objectives per NYSDEC Part 375

All concentrations are in mg/kg unless otherwise indicated;

Boldface type designates those compounds detected at concentrations exceeding NYSDEC standards;

NE = No standard established.

MDL = Method Detection Limit

ND= Not detected at MDL for sample.

Table 3. **Volatile Organic Compounds (VOCs) in Soil Boring Samples;** USEPA Method 8260C & 50
collected **March 3, 2014**; 211-235 McGuinness Blvd., Brooklyn, New York 11222
PVE Sheffler File #500008

Chemical Constituent	NYSDEC Limit[1]	NYSDEC Limit[2]	Sample ID GB -1 14-16'	Sample ID GB-2 12-14'	Sample ID GB-3 14-16'	Sample ID B-1 8.5-10'
VOCs						
1,1,1-Trichloroethane	680	100,000	ND<6.82	ND<7.78	ND<6.92	ND<7.70
1,1,2,2-Tetrachloroethane	NE	NE	ND<6.82	ND<7.78	ND<6.92	ND<7.70
1,1,2-Trichloroethane	NE	NE	ND<6.82	ND<7.78	ND<6.92	ND<7.70
1,1-Dichloroethane	270	26,000	ND<6.82	ND<7.78	ND<6.92	ND<7.70
1,1-Dichloroethene	330	100,000	ND<6.82	ND<7.78	ND<6.92	ND<7.70
1,2,3-Trichlorobenzene	NE	NE	ND<17.0	ND<19.4	ND<17.3	ND<19.2
1,2,4-Trichlorobenzene	NE	NE	ND<17.0	ND<19.4	ND<17.3	ND<19.2
1,2,4-Trimethylbenzene	3,600	52,000	ND<6.82	ND<7.78	ND<6.92	ND<7.70
1,2-Dibromo-3-Chloropropane	NE	NE	ND<34.1	ND<38.9	ND<34.6	ND<38.5
1,2-Dibromoethane	NE	NE	ND<6.82	ND<7.78	ND<6.92	ND<7.70
1,2-Dichlorobenzene	1,100	100,000	ND<6.82	ND<7.78	ND<6.92	ND<7.70
1,2-Dichloroethane	20	3,100	ND<6.82	ND<7.78	ND<6.92	ND<7.70
1,2-Dichloropropane	NE	NE	ND<6.82	ND<7.78	ND<6.92	ND<7.70
1,3,5-Trimethylbenzene	8,400	52,000	ND<6.82	ND<7.78	ND<6.92	ND<7.70
1,3-Dichlorobenzene	2,400	49,000	ND<6.82	ND<7.78	ND<6.92	ND<7.70
1,4-Dichlorobenzene	1,800	13,000	ND<6.82	ND<7.78	ND<6.92	ND<7.70
1,4-dioxane	100	13,000	ND<68.2	ND<77.8	ND<69.2	ND<77.0
2-Butanone	NE	NE	ND<34.1	ND<38.9	ND<34.6	ND<38.5
2- Hexanone	NE	NE	ND<17.0	ND<19.4	ND<17.3	ND<19.2
4-Methyl-2-pentanone	NE	NE	ND<17.0	ND<19.4	ND<17.3	ND<19.2
Acetone	50	100,000	**139**	ND<38.9	38.7	ND<38.5
Benzene	60	4,800	ND<6.82	ND<7.78	ND<6.92	ND<7.70
Bromochloromethane	NE	NE	ND<17.0	ND<19.4	ND<17.3	ND<19.2
Bromodichloromethane	NE	NE	ND<6.82	ND<7.78	ND<6.92	ND<7.70
Bromoform	NE	NE	ND<17.0	ND<19.4	ND<17.3	ND<19.2
Bromomethane	NE	NE	ND<6.82	ND<7.78	ND<6.92	ND<7.70
Carbon disulfide	NE	NE	ND<6.82	ND<7.78	ND<6.92	ND<7.70
Carbon tetrachloride	760	2,400	ND<6.82	ND<7.78	ND<6.92	ND<7.70
Chlorobenzene	1,100	100,000	ND<6.82	ND<7.78	ND<6.92	ND<7.70
Chloroethane	NE	NE	ND<6.82	ND<7.78	ND<6.92	ND<7.70
Chloroform	370	49,000	ND<6.82	ND<7.78	ND<6.92	ND<7.70
Chloromethane	NE	NE	ND<6.82	ND<7.78	ND<6.92	ND<7.70
cis-1,2-Dichloroethene	250	100,00	ND<6.82	ND<7.78	ND<6.92	ND<7.70
cis-1,3- Dichloropropene	190	100,00	ND<6.82	ND<7.78	ND<6.92	ND<7.70
Cyclohexane	NE	NE	ND<34.1	ND<38.9	ND<34.6	ND<38.5
Dibromochloromethane	NE	NE	ND<6.82	ND<7.78	ND<6.92	ND<7.70
Dichlorodifluoromethane	NE	NE	ND<6.82	ND<7.78	ND<6.92	ND<7.70
Ethylbenzene	1,000	41,000	ND<6.82	ND<7.78	ND<6.92	ND<7.70

Freon 113	NE	NE	ND<6.82	ND<7.78	ND<6.92	ND<7.70
Isopropylbenzene	NE	NE	ND<6.82	ND<7.78	ND<6.92	ND<7.70
m/p-Xylene	260	100,000	ND<6.82	ND<7.78	ND<6.92	ND<7.70
Methyl acetate	NE	NE	ND<6.82	ND<7.78	ND<6.92	ND<7.70
Methyl tert-butyl ether	930	100,000	ND<6.82	ND<7.78	ND<6.92	ND<7.70
Methylcyclohexane	NE	NE	ND<6.82	ND<7.78	ND<6.92	ND<7.70
Methylene chloride	50	100,000	ND<17.0	ND<19.4	ND<17.3	ND<19.2
Naphthalene	NE	NE	ND<17.0	ND<19.4	ND<17.3	ND<19.2
n-Butylbenzene	12,000	NE	ND<6.82	ND<7.78	ND<6.92	ND<7.70
n-propylbenzene	3,900	100,000	ND<6.82	ND<7.78	ND<6.92	ND<7.70
o-Xylene	NE	NE	ND<6.82	ND<7.78	ND<6.92	ND<7.70
p-Isopropyltoulene	NE	NE	ND<6.82	ND<7.78	ND<6.92	ND<7.70
sec-Butylbenxene	11,000	100,000	ND<6.82	ND<7.78	ND<6.92	ND<7.70
Styrene	NE	NE	ND<17.0	ND<19.4	ND<17.3	ND<19.2
tert-Butylbenzene	5,900	100,000	ND<6.82	ND<7.78	ND<6.92	ND<7.70
Tetrachloroethene	1,300	19,000	ND<6.82	ND<7.78	ND<6.92	ND<7.70
Toluene	700	100,000	ND<6.82	ND<7.78	ND<6.92	ND<7.70
trans-1,2-Dichloroethene	190	100,000	ND<6.82	ND<7.78	ND<6.92	ND<7.70
trans-1,3- Dichloropropene	NE	NE	ND<6.82	ND<7.78	ND<6.92	ND<7.70
Trichloroethene	470	21,000	ND<6.82	ND<7.78	ND<6.92	ND<7.70
Trichlorofluormethane	NE	NE	ND<6.82	ND<7.78	ND<6.92	ND<7.70
Vinyl Chloride	20	900	ND<6.82	ND<7.78	ND<6.92	ND<7.70

Notes:

1 – Standards are for soils according 6NYCRR Part 375, Unrestricted Use Soil Cleanup Objectives;

2 - Standards are for soils according 6NYCRR Part 375, Restricted-Residential Use Soil Cleanup Objectives;

All concentrations are in ug/kg unless otherwise indicated;

Boldface type designates those compounds detected at concentrations exceeding NYSDEC standards;

NE = No standard established.

MDL = Method Detection Limit

ND= Not detected at MDL for sample.

Table 4. **Semi-Volatile Organics (Acid/Base Neutrals) in Soil Boring Samples;** USEPA Method 8270D & 3550C

collected **March 3, 2014**; 211-235 McGuinness Blvd., Brooklyn, New York 11222

PVE Sheffler File #500008

Chemical Constituent	NYSDEC Limit[1]	NYSDEC Limit[2]	Sample ID GB -1 14-16'	Sample ID GB-2 12-14'	Sample ID GB-3 14-16'	Sample ID B-1 8.5-10'
SVOCs (Acid/Base Neutrals)						
1,1-Biphenyl	NE	NE	ND<325	ND<334	ND<328	ND<315
1,2,4,5-Tetrachlorobenzene	NE	NE	ND<325	ND<334	ND<328	ND<315
1,2,4-Trichlorobenzene	NE	NE	ND<325	ND<334	ND<328	ND<315
1,2-Dichlorobenzene	NE	NE	ND<325	ND<334	ND<328	ND<315
1,3-Dichlorobenzene	NE	NE	ND<325	ND<334	ND<328	ND<315
1,4-Dichlorobenzene	NE	NE	ND<325	ND<334	ND<328	ND<315
2,3,4,6-Tetrachlorophenol	NE	NE	ND<325	ND<334	ND<328	ND<315
2,4,5-Trichlorophenol	NE	NE	ND<651	ND<668	ND<656	ND<630
2,4,6-Trichlorophenol	NE	NE	ND<325	ND<334	ND<328	ND<315
2,4-Dichlorophenol	NE	NE	ND<325	ND<334	ND<328	ND<315
2,4-Dimethylphenol	NE	NE	ND<325	ND<334	ND<328	ND<315
2,4-Dinitrophenol	NE	NE	ND<651	ND<668	ND<656	ND<630
2,4-Dinitrotoluene	NE	NE	ND<325	ND<334	ND<328	ND<315
2,6-Dinitrotoluene	NE	NE	ND<325	ND<334	ND<328	ND<315
2-Chloronaphthalene	NE	NE	ND<325	ND<334	ND<328	ND<315
2-Chlorophenol	NE	NE	ND<325	ND<334	ND<328	ND<315
2-Methylnaphthalene	NE	NE	ND<325	ND<334	ND<328	ND<315
2-Methylphenol	NE	NE	ND<325	ND<334	ND<328	ND<315
2-Nitroaniline	NE	NE	ND<651	ND<668	ND<656	ND<630
2-Nitrophenol	NE	NE	ND<325	ND<334	ND<328	ND<315
3 & 4 Methylphenol	NE	NE	ND<325	ND<334	ND<328	ND<315
3,3'-Dichlorobenzidine	NE	NE	ND<325	ND<334	ND<328	ND<315
3-Nitroaniline	NE	NE	ND<651	ND<668	ND<656	ND<630
4,6-Dinitro-2-methylphenol	NE	NE	ND<651	ND<668	ND<656	ND<630
4-Bromophenyl phenyl ether	NE	NE	ND<325	ND<334	ND<328	ND<315
4-Chloro-3-methylphenol	NE	NE	ND<325	ND<334	ND<328	ND<315
4-Chloroaniline	NE	NE	ND<325	ND<334	ND<328	ND<315
4-Chlorophenyl phenyl ether	NE	NE	ND<325	ND<334	ND<328	ND<315
4-Nitroaniline	NE	NE	ND<651	ND<668	ND<656	ND<630
4-Nitrophenol	NE	NE	ND<651	ND<668	ND<656	ND<630
Acenaphthene	20,000	100,000	ND<325	ND<334	ND<328	ND<315
Acenaphthylene	100,000	100,000	ND<325	ND<334	ND<328	ND<315
Acetophenone	NE	NE	ND<325	ND<334	ND<328	ND<315
Anthracene	100,000	100,000	ND<325	ND<334	ND<328	ND<315
Atrazine	NE	NE	ND<325	ND<334	ND<328	ND<315
Benzaldehyde	NE	NE	ND<325	ND<334	ND<328	ND<315
Benzo[a]anthracene	1,000	1,000	ND<325	ND<334	ND<328	ND<315
Benzo[a]pyrene	1,000	1,000	ND<325	ND<334	ND<328	ND<315
Benzo[b]fluoranthene	1,000	1,000	ND<325	ND<334	ND<328	ND<315
Benzo[g,h,i]perylene	100,000	100,000	ND<325	ND<334	ND<328	ND<315
Benzo[k]fluoranthene	800	3,900	ND<325	ND<334	ND<328	ND<315
Bis(2-chloroethoxy)methane	NE	NE	ND<325	ND<334	ND<328	ND<315
Bis(2-chloroethyl)ether	NE	NE	ND<325	ND<334	ND<328	ND<315
Bis (2-chloroisopropyl) ether	NE	NE	ND<325	ND<334	ND<328	ND<315
Bis(2-ethylhexyl) phthalate	NE	NE	ND<325	ND<334	ND<328	ND<315
Butyl benzyl phthalate	NE	NE	ND<325	ND<334	ND<328	ND<315
Caprolactam	NE	NE	ND<325	ND<334	ND<328	ND<315
Carbazole	NE	NE	ND<325	ND<334	ND<328	ND<315
Chrysene	1,000	3,900	ND<325	ND<334	ND<328	ND<315
Dibenz(a,h)anthracene	330	33,000	ND<325	ND<334	ND<328	ND<315
Dibenzofuran	NE	NE	ND<325	ND<334	ND<328	ND<315
Diethyl phthalate	NE	NE	ND<325	ND<334	ND<328	ND<315
Dimethyl phthalate	NE	NE	ND<651	ND<668	ND<656	ND<630
Di-n-butyl phthalate	NE	NE	ND<325	ND<334	ND<328	ND<315
Di-n-octyl phthalate	NE	NE	ND<325	ND<334	ND<328	ND<315
Fluoranthene	100,000	100,000	ND<325	ND<334	ND<328	ND<315
Fluorene	30,000	100,000	ND<325	ND<334	ND<328	ND<315
Hexachlorobenzene	NE	NE	ND<325	ND<334	ND<328	ND<315
Hexachlorobutadiene	NE	NE	ND<325	ND<334	ND<328	ND<315
Hexachlorocyclopentadiene	NE	NE	ND<325	ND<334	ND<328	ND<315
Hexachloroethane	NE	NE	ND<325	ND<334	ND<328	ND<315
Indeno[1,2,3-cd]pyrene	500	500	ND<325	ND<334	ND<328	ND<315

Table 4. **Semi-Volatile Organics (Acid/Base Neutrals) in Soil Boring Samples;** USEPA Method 8270D & 3550C

collected **March 3, 2014**; 211-235 McGuinness Blvd., Brooklyn, New York 11222

PVE Sheffler File #500008

Chemical Constituent	NYSDEC Limit[1]	NYSDEC Limit[2]	Sample ID GB -1 14-16'	Sample ID GB-2 12-14'	Sample ID GB-3 14-16'	Sample ID B-1 8.5-10'
SVOCs (Acid/Base Neutrals)						
Isophorone	NE	NE	ND<325	ND<334	ND<328	ND<315
Naphthalene	12,000	100,000	ND<325	ND<334	ND<328	ND<315
Nitrobenzene	NE	NE	ND<325	ND<334	ND<328	ND<315
N-Nitrosodi-n-propylamine	NE	NE	ND<325	ND<334	ND<328	ND<315
N-Nitrosodiphenylamine	NE	NE	ND<325	ND<334	ND<328	ND<315
Pentachlorophenol	800	6,700	ND<651	ND<668	ND<656	ND<630
Phenanthrene	100,000	100,000	ND<325	ND<334	ND<328	ND<315
Phenol	330	100,000	ND<325	ND<334	ND<328	ND<315
Pyrene	100,000	100,000	ND<325	ND<334	ND<328	ND<315

Notes:

1 – Standards are for soils according 6NYCRR Part 375, Unrestricted Use Soil Cleanup Objectives;

2 - Standards are for soils according 6NYCRR Part 375, Restricted-Residential Use Soil Cleanup Objectives;

All concentrations are in ug/kg unless otherwise indicated;

Boldface type designates those compounds detected at concentrations exceeding NYSDEC standards;

NE = No standard established.

MDL = Method Detection Limit

ND= Not detected at MDL for sample.

Table 5. **Chlorinated Pesticides & Herbicides** in **Soil Boring Samples;** USEPA Method 8081, 3510C collected **March 3, 2014**; 211-235 McGuinness Blvd., Brooklyn, New York 11222

PVE Sheffler File #500008

Chemical Constituent	NYSDEC Limit[1]	NYSDEC Limit[2]	Sample ID GB -1 14-16'	Sample ID GB-2 12-14'	Sample ID GB-3 14-16'	Sample ID B-1 8.5-10'
Herbicides						
2,4,5-TP (Silvex)	3,800	100,000	ND<5.9	ND<5.9	ND<5.9	ND<5.5
Chlorinated Pesticides						
4,4-DDD	3.3	13,000	ND<3.9	ND<3.9	ND<3.9	ND<3.6
4,4-DDE	3.3	8,900	ND<3.9	ND<3.9	ND<3.9	ND<3.6
4,4-DDT	3.3	7,900	ND<3.9	ND<3.9	ND<3.9	ND<3.6
Aldrin	5	97	ND<2.0	ND<2.0	ND<2.0	ND<1.9
alpha-BHC	20	480	ND<2.0	ND<2.0	ND<2.0	ND<1.9
beta-BHC	36	360	ND<2.0	ND<2.0	ND<2.0	ND<1.9
cis-Chlordane	94	4,200	ND<2.0	ND<2.0	ND<2.0	ND<1.9
delta-BHC	40	100,000	ND<2.0	ND<2.0	ND<2.0	ND<1.9
Dieldrin	5	200	ND<3.9	ND<3.9	ND<3.9	ND<3.6
Endosulfan I	2,400	24,000	ND<2.0	ND<2.0	ND<2.0	ND<1.9
Endosulfan II	2,400	24,000	ND<3.9	ND<3.9	ND<3.9	ND<3.6
Endosulfan Sulfate	2,400	24,000	ND<3.9	ND<3.9	ND<3.9	ND<3.6
Endrin	14	11,000	ND<3.9	ND<3.9	ND<3.9	ND<3.6
Endrin Aldehyde	NE	NE	ND<3.9	ND<3.9	ND<3.9	ND<3.6
Endrin Ketone	NE	NE	ND<3.9	ND<3.9	ND<3.9	ND<3.6
gamma-BHC (Lindane)	100	1,300	ND<2.0	ND<2.0	ND<2.0	ND<1.9
Heptachlor	42	2,100	ND<2.0	ND<2.0	ND<2.0	ND<1.9
Heptachlor Epoxide	NE	NE	ND<2.0	ND<2.0	ND<2.0	ND<1.9
Methoxychlor	NE	NE	ND<20	ND<20	ND<20	ND<19
Toxaphene	NE	NE	ND<200	ND<200	ND<200	ND<190
trans-Chlordane	NE	NE	ND<2.0	ND<2.0	ND<2.0	ND<1.9

Notes:

1 – Standards are for soils according 6NYCRR Part 375, Unrestricted Use Soil Cleanup Objectives;

2 - Standards are for soils according 6NYCRR Part 375, Restricted-Residential Use Soil Cleanup Objectives;

All concentrations are in ug/kg unless otherwise indicated;

Boldface type designates those compounds detected at concentrations exceeding NYSDEC standards;

NE = No standard established.

MDL = Method Detection Limit

ND= Not detected at MDL for sample.

& 8151

Table 6. **Polychlorinated Biphenyls (PCBs)** in **Soil Boring Samples;** USEPA Method 8082A collected **March 3, 2014**; 211-235 McGuinness Blvd., Brooklyn, New York 11222
PVE Sheffler File #500008

Chemical Constituent	NYSDEC Limit[1]	NYSDEC Limit[2]	Sample ID GB -1 14-16'	Sample ID GB-2 12-14'	Sample ID GB-3 14-16'	Sample ID B-1 8.5-10'
PCBs						
PCB-1016	0.1	1	ND<0.0327	ND<0.0349	ND<0.0354	ND<0.0313
PCB-1221	0.1	1	ND<0.0327	ND<0.0349	ND<0.0354	ND<0.0313
PCB-1232	0.1	1	ND<0.0327	ND<0.0349	ND<0.0354	ND<0.0313
PCB-1242	0.1	1	ND<0.0327	ND<0.0349	ND<0.0354	ND<0.0313
PCB-1248	0.1	1	ND<0.0327	ND<0.0349	ND<0.0354	ND<0.0313
PCB-1254	0.1	1	ND<0.0327	ND<0.0349	ND<0.0354	ND<0.0313
PCB-1260	0.1	1	ND<0.0327	ND<0.0349	ND<0.0354	ND<0.0313
PCB-1262	0.1	1	ND<0.0327	ND<0.0349	ND<0.0354	ND<0.0313
PCB-1268	0.1	1	ND<0.0327	ND<0.0349	ND<0.0354	ND<0.0313

Notes:

1 – Standards are for soils according 6NYCRR Part 375, Unrestricted Use Soil Cleanup Objectives;

2 - Standards are for soils according 6NYCRR Part 375, Restricted-Residential Use Soil Cleanup Objectives;

All concentrations are in mg/kg unless otherwise indicated;

Boldface type designates those compounds detected at concentrations exceeding NYSDEC standards;

NE = No standard established.

MDL = Method Detection Limit

ND= Not detected at MDL for sample.

Table 7. **Part 375 Metals (ICP)** in **Ground Water Samples;** USEPA Method 6010C, 3005 collected **March 12, 2014**; 211-235 McGuinness Blvd., Brooklyn, New York 11222 PVE Sheffler File #500008

Chemical Constituent	NYSDEC Limit*	Sample ID MW-1	Sample ID MW-2	Sample ID MW-3
Metals				
Arsenic	0.025	0.0126	ND<0.0100	0.0153
Barium	1	0.155	ND<0.100	0.118
Beryllium	NE	ND<0.00500	ND<0.00500	ND<0.00500
Cadmium	0.005	ND<0.00500	ND<0.00500	ND<0.00500
Chromium	0.05	ND<0.0100	ND<0.0100	ND<0.0100
Copper	0.2	ND<0.0250	ND<0.0250	ND<0.0250
Lead	0.025	ND<0.0100	ND<0.0100	ND<0.0100
Manganese	0.3	**4.44**	**2.43**	**1.36**
Mercury	0.0007	ND<0.000200	ND<0.000200	ND<0.000200
Nickel	0.1	ND<0.0400	ND<0.0400	ND<0.0400
Selenium	0.01	ND<0.0100	ND<0.0100	ND<0.0100
Silver	0.05	ND<0.0100	ND<0.0100	ND<0.0100
Zinc	NE	ND<0.0600	0.0652	ND<0.0600

Notes:

*Standards are for Class GA groundwater according 6NYCRR Part 700-705.

All concentrations are in mg/L unless otherwise indicated;

Boldface type designates those compounds detected at concentrations exceeding NYSDEC standards;

NE = No standard established.

MDL = Method Detection Limit

ND= Not detected at MDL for sample.

Table 8. **Volatile Organic Compounds (VOCs) in Ground Water Samples;** USEPA Method 8260C & 5030 collected **March 12, 2014**; 211-235 McGuinness Blvd., Brooklyn, New York 11222

PVE Sheffler File #500008

Chemical Constituent	NYSDEC Limit*	Sample ID MW-1	Sample ID MW-2	Sample ID MW-3
VOCs				
1,1,1-Trichloroethane	5	ND<2.00	ND<2.00	ND<2.00
1,1,2,2-Tetrachloroethane	5	ND<2.00	ND<2.00	ND<2.00
1,1,2-Trichloroethane	1	ND<2.00	ND<2.00	ND<2.00
1,1-Dichloroethane	5	ND<2.00	ND<2.00	ND<2.00
1,1-Dichloroethene	5	ND<2.00	ND<2.00	ND<2.00
1,2,3-Trichlorobenzene	5	ND<5.00	ND<5.00	ND<5.00
1,2,4-Trichlorobenzene	5	ND<5.00	ND<5.00	ND<5.00
1,2,4-Trimethylbenzene	5	ND<2.00	ND<2.00	ND<2.00
1,2-Dibromo-3-Chloropropane	0.04	ND<10.0	ND<10.0	ND<10.0
1,2-Dibromoethane	NE	ND<2.00	ND<2.00	ND<2.00
1,2-Dichlorobenzene	3	ND<2.00	ND<2.00	ND<2.00
1,2-Dichloroethane	0.6	ND<2.00	ND<2.00	ND<2.00
1,2-Dichloropropane	1	ND<2.00	ND<2.00	ND<2.00
1,3,5-Trimethylbenzene	5	ND<2.00	ND<2.00	ND<2.00
1,3-Dichlorobenzene	3	ND<2.00	ND<2.00	ND<2.00
1,4-Dichlorobenzene	3	ND<2.00	ND<2.00	ND<2.00
1,4-dioxane	NE	ND<20.0	ND<20.0	ND<20.0
2-Butanone	NE	ND<10.0	ND<10.0	ND<10.0
2- Hexanone	NE	ND<5.00	ND<5.00	ND<5.00
4-Methyl-2-pentanone	NE	ND<5.00	ND<5.00	ND<5.00
Acetone	NE	ND<10.0	ND<10.0	ND<10.0
Benzene	1	ND<0.700	ND<0.700	ND<0.700
Bromochloromethane	5	ND<5.00	ND<5.00	ND<5.00
Bromodichloromethane	5	ND<2.00	ND<2.00	ND<2.00
Bromoform	NE	ND<5.00	ND<5.00	ND<5.00
Bromomethane	NE	ND<2.00	ND<2.00	ND<2.00
Carbon disulfide	60	ND<2.00	ND<2.00	ND<2.00
Carbon tetrachloride	5	ND<2.00	ND<2.00	ND<2.00
Chlorobenzene	5	ND<2.00	ND<2.00	ND<2.00
Chloroethane	5	ND<2.00	ND<2.00	ND<2.00
Chloroform	7	ND<2.00	ND<2.00	ND<2.00
Chloromethane	NE	ND<2.00	ND<2.00	ND<2.00
cis-1,2-Dichloroethene	5	ND<2.00	ND<2.00	ND<2.00
cis-1,3- Dichloropropene	0.4	ND<2.00	ND<2.00	ND<2.00
Cyclohexane	NE	ND<10.0	ND<10.0	ND<10.0
Dibromochloromethane	NE	ND<2.00	ND<2.00	ND<2.00
Dichlorodifluoromethane	5	ND<2.00	ND<2.00	ND<2.00
Ethylbenzene	5	ND<2.00	ND<2.00	ND<2.00
Freon 113	NE	ND<2.00	ND<2.00	ND<2.00

Isopropylbenzene	5	ND<2.00	ND<2.00	ND<2.00
m/p-Xylene	NE	ND<2.00	ND<2.00	ND<2.00
Methyl acetate	NE	ND<2.00	ND<2.00	ND<2.00
Methyl tert-butyl ether	NE	ND<2.00	ND<2.00	ND<2.00
Methylcyclohexane	NE	ND<2.00	ND<2.00	ND<2.00
Methylene chloride	5	ND<5.00	ND<5.00	ND<5.00
Naphthalene	NE	ND<5.00	ND<5.00	ND<5.00
n-Butylbenzene	5	ND<2.00	ND<2.00	ND<2.00
n-propylbenzene	NE	ND<2.00	ND<2.00	ND<2.00
o-Xylene	NE	ND<2.00	ND<2.00	ND<2.00
p-Isopropyltoulene	NE	ND<2.00	ND<2.00	ND<2.00
sec-Butylbenxene	NE	ND<2.00	ND<2.00	ND<2.00
Styrene	5	ND<5.00	ND<5.00	ND<5.00
tert-Butylbenzene	5	ND<2.00	ND<2.00	ND<2.00
Tetrachloroethene	5	ND<2.00	ND<2.00	ND<2.00
Toluene	5	ND<2.00	ND<2.00	ND<2.00
trans-1,2-Dichloroethene	5	ND<2.00	ND<2.00	ND<2.00
trans-1,3- Dichloropropene	NE	ND<2.00	ND<2.00	ND<2.00
Trichloroethene	5	ND<2.00	ND<2.00	ND<2.00
Trichlorofluormethane	5	ND<2.00	ND<2.00	ND<2.00
Vinyl Chloride	2	ND<2.00	ND<2.00	ND<2.00

Notes:

*Standards are for Class GA groundwater according 6NYCRR Part 700-705.

All concentrations are in ug/L unless otherwise indicated;

Boldface type designates those compounds detected at concentrations exceeding NYSDEC standards;

NE = No standard established.

MDL = Method Detection Limit

ND= Not detected at MDL for sample.

Table 9. **Semi-Volatile Organics (Acid/Base Neutrals) in Ground Water Samples;** USEPA Method 8270D & 3510C

collected **March 12, 2014**; 211-235 McGuinness Blvd., Brooklyn, New York 11222

PVE Sheffler File #500008

Chemical Constituent	NYSDEC Limit*	Sample ID MW-1		Sample ID MW-2		Sample ID MW-2	
SVOCs (Acid/Base Neutrals)							
1,1-Biphenyl	5	ND<10.0		ND<10.0		ND<10.0	
1,2,4,5-Tetrachlorobenzene	5	ND<10.0		ND<10.0		ND<10.0	
1,2,4-Trichlorobenzene	5	ND<10.0		ND<10.0		ND<10.0	
1,2-Dichlorobenzene	3	ND<10.0		ND<10.0		ND<10.0	
1,3-Dichlorobenzene	3	ND<10.0		ND<10.0		ND<10.0	
1,4-Dichlorobenzene	3	ND<10.0	L	ND<10.0	L	ND<10.0	L
2,3,4,6-Tetrachlorophenol	NE	ND<10.0		ND<10.0		ND<10.0	
2,4,5-Trichlorophenol	NE	ND<20.0		ND<20.0		ND<20.0	
2,4,6-Trichlorophenol	NE	ND<10.0		ND<10.0		ND<10.0	
2,4-Dichlorophenol	1	ND<10.0		ND<10.0		ND<10.0	
2,4-Dimethylphenol	1	ND<10.0		ND<10.0		ND<10.0	
2,4-Dinitrophenol	1	ND<20.0		ND<20.0		ND<20.0	
2,4-Dinitrotoluene	1	ND<10.0		ND<10.0		ND<10.0	
2,6-Dinitrotoluene	5	ND<10.0		ND<10.0		ND<10.0	
2-Chloronaphthalene	NE	ND<10.0		ND<10.0		ND<10.0	
2-Chlorophenol	1	ND<10.0		ND<10.0		ND<10.0	
2-Methylnaphthalene	NE	ND<10.0		ND<10.0		ND<10.0	
2-Methylphenol	1	ND<10.0		ND<10.0		ND<10.0	
2-Nitroaniline	5	ND<20.0		ND<20.0		ND<20.0	
2-Nitrophenol	1	ND<10.0		ND<10.0		ND<10.0	
3 & 4 Methylphenol	1	ND<10.0		ND<10.0		ND<10.0	
3,3'-Dichlorobenzidine	5	ND<10.0		ND<10.0		ND<10.0	
3-Nitroaniline	5	ND<20.0		ND<20.0		ND<20.0	
4,6-Dinitro-2-methylphenol	NE	ND<20.0		ND<20.0		ND<20.0	
4-Bromophenyl phenyl ether	NE	ND<10.0		ND<10.0		ND<10.0	
4-Chloro-3-methylphenol	NE	ND<10.0		ND<10.0		ND<10.0	
4-Chloroaniline	5	ND<10.0		ND<10.0		ND<10.0	
4-Chlorophenyl phenyl ether	NE	ND<10.0		ND<10.0		ND<10.0	
4-Nitroaniline	5	ND<20.0		ND<20.0		ND<20.0	
4-Nitrophenol	1	ND<20.0		ND<20.0		ND<20.0	
Acenaphthene	NE	ND<10.0		ND<10.0		ND<10.0	
Acenaphthylene	NE	ND<10.0		ND<10.0		ND<10.0	
Acetophenone	NE	ND<10.0		ND<10.0		ND<10.0	
Anthracene	NE	ND<10.0		ND<10.0		ND<10.0	
Atrazine	7.5	ND<10.0		ND<10.0		ND<10.0	
Benzaldehyde	NE	ND<10.0		ND<10.0		ND<10.0	
Benzo[a]anthracene	NE	ND<10.0		ND<10.0		ND<10.0	
Benzo[a]pyrene	NE	ND<10.0		ND<10.0		ND<10.0	
Benzo[b]fluoranthene	NE	ND<10.0		ND<10.0		ND<10.0	
Benzo[g,h,i]perylene	NE	ND<10.0		ND<10.0		ND<10.0	
Benzo[k]fluoranthene	NE	ND<10.0		ND<10.0		ND<10.0	
Bis(2-chloroethoxy)methane	5	ND<10.0		ND<10.0		ND<10.0	
Bis(2-chloroethyl)ether	1	ND<10.0		ND<10.0		ND<10.0	
Bis (2-chloroisopropyl) ether	NE	ND<10.0		ND<10.0		ND<10.0	
Bis(2-ethylhexyl) phthalate	5	ND<10.0		ND<10.0		ND<10.0	
Butyl benzyl phthalate	NE	ND<10.0		ND<10.0		ND<10.0	
Caprolactam	NE	ND<10.0		ND<10.0		ND<10.0	
Carbazole	NE	ND<10.0		ND<10.0		ND<10.0	
Chrysene	NE	ND<10.0		ND<10.0		ND<10.0	
Dibenz(a,h)anthracene	NE	ND<10.0		ND<10.0		ND<10.0	
Dibenzofuran	NE	ND<10.0		ND<10.0		ND<10.0	
Diethyl phthalate	NE	ND<10.0		ND<10.0		ND<10.0	
Dimethyl phthalate	NE	ND<20.0		ND<20.0		ND<20.0	
Di-n-butyl phthalate	NE	ND<10.0		ND<10.0		ND<10.0	
Di-n-octyl phthalate	NE	ND<10.0		ND<10.0		ND<10.0	
Fluoranthene	NE	ND<10.0		ND<10.0		ND<10.0	
Fluorene	NE	ND<10.0		ND<10.0		ND<10.0	

Table 9. **Semi-Volatile Organics (Acid/Base Neutrals) in Ground Water Samples;** USEPA Method 8270D & 3510C

collected **March 12, 2014**; 211-235 McGuinness Blvd., Brooklyn, New York 11222

PVE Sheffler File #500008

Chemical Constituent	NYSDEC Limit*	Sample ID MW-1	Sample ID MW-2	Sample ID MW-2
SVOCs (Acid/Base Neutrals)				
Hexachlorobenzene	0.04	ND<10.0	ND<10.0	ND<10.0
Hexachlorobutadiene	0.5	ND<10.0	ND<10.0	ND<10.0
Hexachlorocyclopentadiene	NE	ND<10.0	ND<10.0	ND<10.0
Hexachloroethane	5	ND<10.0	ND<10.0	ND<10.0
Indeno[1,2,3-cd]pyrene	NE	ND<10.0	ND<10.0	ND<10.0
Isophorone	NE	ND<10.0	ND<10.0	ND<10.0
Naphthalene	NE	ND<10.0	ND<10.0	ND<10.0
Nitrobenzene	NE	ND<10.0	ND<10.0	ND<10.0
N-Nitrosodi-n-propylamine	NE	ND<10.0	ND<10.0	ND<10.0
N-Nitrosodiphenylamine	NE	ND<10.0	ND<10.0	ND<10.0
Pentachlorophenol	1	ND<20.0	ND<20.0	ND<20.0
Phenanthrene	NE	ND<10.0	ND<10.0	ND<10.0
Phenol	1	ND<10.0	ND<10.0	ND<10.0
Pyrene	NE	ND<10.0	ND<10.0	ND<10.0

Notes:

*Standards are for Class GA groundwater according 6NYCRR Part 700-705.

All concentrations are in ug/L unless otherwise indicated;

Boldface type designates those compounds detected at concentrations exceeding NYSDEC standards;

NE = No standard established.

MDL = Method Detection Limit

ND= Not detected at MDL for sample.

L= Laboratory Control Sample recovery outside accepted QC limits

Table 10. **Chlorinated Pesticides** in **Ground Water Samples;** USEPA Method 8081B, 3510C collected **March 12, 2014**; 211-235 McGuinness Blvd., Brooklyn, New York 11222 PVE Sheffler File #500008

Chemical Constituent	NYSDEC	Sample ID MW-1	Sample ID MW-2	Sample ID MW-3
Chlorinated Pesticides				
4,4-DDD	0.3	ND<0.11	ND<0.11	ND<0.11
4,4-DDE	0.2	ND<0.10	ND<0.10	ND<0.11
4,4-DDT	0.2	ND<0.11	ND<0.11	ND<0.12
Aldrin	NE	ND<0.10	ND<0.10	ND<0.10
alpha-BHC	NE	ND<0.10	ND<0.10	ND<0.10
beta-BHC	NE	ND<0.12	ND<0.12	ND<0.13
cis-Chlordane	NE	ND<0.11	ND<0.11	ND<0.12
delta-BHC	NE	ND<0.10	ND<0.10	ND<0.11
Dieldrin	0.004	ND<0.10	ND<0.10	ND<0.11
Endosulfan I	NE	ND<0.12	ND<0.12	ND<0.13
Endosulfan II	NE	ND<0.13	ND<0.13	ND<0.13
Endosulfan Sulfate	NE	ND<0.15	ND<0.15	ND<0.16
Endrin	NE	ND<0.12	ND<0.12	ND<0.12
Endrin Aldehyde	5	ND<0.11	ND<0.12	ND<0.12
Endrin Ketone	5	ND<0.13	ND<0.14	ND<0.14
gamma-BHC (Lindane)	NE	ND<0.11	ND<0.11	ND<0.11
Heptachlor	0.04	ND<0.11	ND<0.11	ND<0.11
Heptachlor Epoxide	0.03	ND<0.10	ND<0.11	ND<0.11
Methoxychlor	35	ND<0.15	ND<0.15	ND<0.16
Toxaphene	0.06	ND<3.3	ND<3.3	ND<3.4
trans-Chlordane	NE	ND<0.10	ND<0.10	ND<0.11

Notes:

*Standards are for Class GA groundwater according 6NYCRR Part 700-705.

All concentrations are in ug/L unless otherwise indicated;

Boldface type designates those compounds detected at concentrations exceeding NYSDEC standards;

NE = No standard established.

MDL = Method Detection Limit

ND= Not detected at MDL for sample.

Table 11. **Polychlorinated Biphenyls (PCBs)** in **Ground Water Samples;** USEPA Method 8082A & 3510C collected **March 12, 2014**; 211-235 McGuinness Blvd., Brooklyn, New York 11222
PVE Sheffler File #500008

Chemical Constituent	NYSDEC Limit*	Sample ID MW-1	Sample ID MW-2	Sample ID MW-3
PCBs				
PCB-1016	0.09	ND<0.100	ND<0.100	ND<0.100
PCB-1221	0.09	ND<0.100	ND<0.100	ND<0.100
PCB-1232	0.09	ND<0.100	ND<0.100	ND<0.100
PCB-1242	0.09	ND<0.100	ND<0.100	ND<0.100
PCB-1248	0.09	ND<0.100	ND<0.100	ND<0.100
PCB-1254	0.09	ND<0.100	ND<0.100	ND<0.100
PCB-1260	0.09	ND<0.100	ND<0.100	ND<0.100
PCB-1262	0.09	ND<0.100	ND<0.100	ND<0.100
PCB-1268	0.09	ND<0.100	ND<0.100	ND<0.100

Notes:

*Standards are for Class GA groundwater according 6NYCRR Part 700-705.

All concentrations are in ug/L unless otherwise indicated;

Boldface type designates those compounds detected at concentrations exceeding NYSDEC standards;

NE = No standard established.

MDL = Method Detection Limit

ND= Not detected at MDL for sample.

SOIL BORING LOGS

AND

MONITORING WELL CONSTRUCTION DIAGRAMS

SOIL BORING LOG

BOREHOLE NO.: **GB-1**

TOTAL DEPTH: **16'**

PROJECT INFORMATION		DRILLING INFORMATION	
PROJECT #:	**500008**	DRILLING CO.:	**HES**
SITE LOCATION:	**211-235 McGuinness Blvd, Brooklyn, NY**	RIG TYPE:	**Geoprobe**
LOGGED BY:	**Stephanie Lewison**	METHOD OF DRILLING:	**Direct Push**
PROJECT MANAGER:	**Christopher Brown**	SAMPLING METHODS:	**4' Macro Core**
DATES DRILLED:	**3/3/2014**	HAMMER WT./DROP	**N/A**
		DEPTH TO WATER	**14'**

NOTES:
Inside Pep Boys service garage

Water level during drilling

DEPTH	SOIL SYMBOLS	SOIL DESCRIPTION	Sample Depth	PID (ppm)
0		CEMENT: Concrete		
		FILL: Asphalt, brick		
		SP: Dry, light brown, sand with some silt/clay		5.3 ppm
-5		SC: Dry, light brown, sand and silt/clay		4.6 ppm
		SP: Wet, light brown, sand and fill (brick, coal fragments)		2.9 ppm
-10		ML: Moist to wet, gray-brown, clay and silt		4.7 ppm
		SP: Saturated, gray-light brown, sand		4.7 ppm
-15				

SOIL BORING LOG

BOREHOLE NO.: **GB-2**

TOTAL DEPTH: **16'**

PROJECT INFORMATION		DRILLING INFORMATION	
PROJECT #:	**500008**	DRILLING CO.:	**HES**
SITE LOCATION:	**211-235 McGuinness Blvd, Brooklyn, NY**	RIG TYPE:	**Geoprobe**
LOGGED BY:	**Stephanie Lewison**	METHOD OF DRILLING:	**Direct Push**
PROJECT MANAGER:	**Christopher Brown**	SAMPLING METHODS:	**4' Macro Core**
DATES DRILLED:	**3/3/2014**	HAMMER WT./DROP	**N/A**
		DEPTH TO WATER	**12'**

NOTES:
Inside Pep Boys service garage

Water level during drilling

DEPTH	SOIL SYMBOLS	SOIL DESCRIPTION	Sample Depth	PID (ppm)
0		FILL: Asphalt, concrete, and fill (2 foot recovery)		
-5		SP: Wetter with depth, light brown, sand. Fragment of coal at 7.5' bls.		2.7 ppm
		SC: Moist, darker brown, sand and clay		
		SC: Moist, light brown, sand and clay		1.7 ppm
-10		SM: Wet to saturated with depth, light brown, sand and silt		1.9 ppm
				4.7 ppm
-15		SP: Saturated, light brown, sand		5.7 ppm

SOIL BORING LOG

BOREHOLE NO.: **GB-3**

TOTAL DEPTH: **16'**

PROJECT INFORMATION		DRILLING INFORMATION	
PROJECT #:	**500008**	DRILLING CO.:	**HES**
SITE LOCATION:	**211-235 McGuinness Blvd, Brooklyn, NY**	RIG TYPE:	**Geoprobe**
LOGGED BY:	**Stephanie Lewison**	METHOD OF DRILLING:	**Direct Push**
PROJECT MANAGER:	**Christopher Brown**	SAMPLING METHODS:	**4' Macro Core**
DATES DRILLED:	**3/3/2014**	HAMMER WT./DROP	**N/A**
		DEPTH TO WATER	**14'**

NOTES:
Inside Pep Boys service garage

Water level during drilling

DEPTH	SOIL SYMBOLS	SOIL DESCRIPTION	Sample Depth	PID (ppm)
0		FILL		
		SW: Dry, light brown, sand and trace gravel		4.1 ppm
		SM: Moist, light brown, sand and silt/clay		3.0 ppm
-5		SP: Saturated, light brown, sand and trace coal fragments		
		SM: Moist/wet, light brown, sand and silt/clay		5.1 ppm
		ASH: Black layer of possible ash		
		SC: Dry, darker brown, sand and clay/silt		
		SP: Saturated, large grain sand		
		ML: Moist, dark brown, tight clay and silt		
-10				2.2 ppm
				3.4 ppm
		SP: Saturated, brown, sand		
-15				6.2 ppm

One Civic Center Plaza
Suite 501
Poughkeepsie, NY 12601
(845) 454-2544

Monitoring Well Construction Diagram

Project #: __500008_____

Project Name/Site: _211-235 McGuinness Blvd, Brooklyn, NY_

Well #: __MW-1_____

Location/Coordinates: _____

Geologist: __Stephanie Lewison & Conor Tarbell_____

Elevation of Ground Surface: _____

Driller: ___HydroEnvironmental Solutions (HES)_____

Drilling Method:___Geoprobe_____

Drilling Fluid: ____None_____

Date Start: ___3-3-14_____ Date End: ___3-3-14_____

Depth of Outer Casing (BLS): _____

Depth of Inner Casing (BLS): _____

Notes: ____Well located along the south wall inside the Pep Boys service garage area, approximately in the center of the wall length._____

Elevations Relative to Land Surface

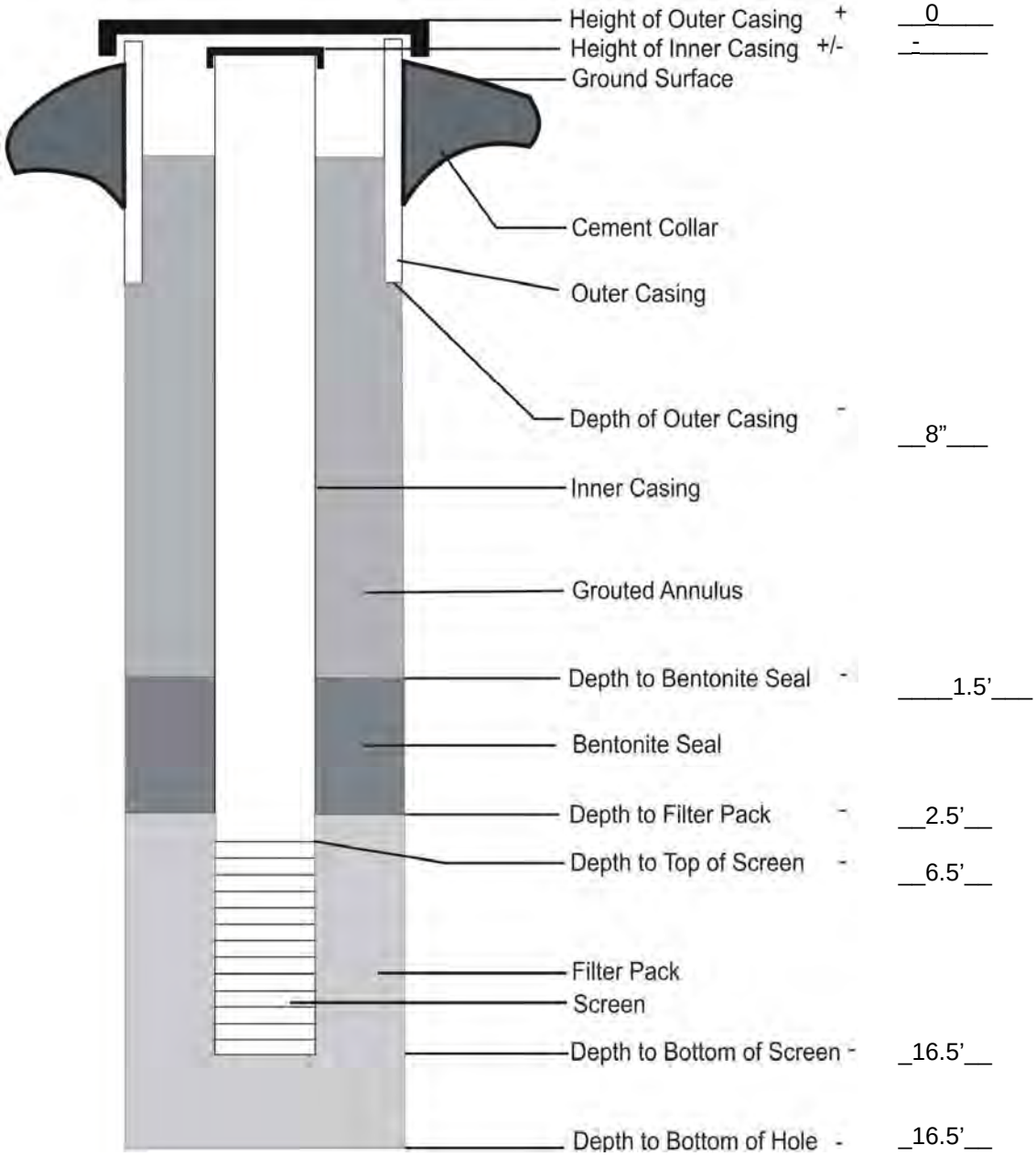

Macrocore Diameter	3.25"
Borehole Diameter	3.25"
Flush-to-grade Curb Box?	_X_Yes ___No
Stick-up Pipe?	___Yes _X_No
Outer Casing Diameter	5"
Outer Casing Material	Steel
Inner Casing Diameter	2"
Inner Casing Material	Schedule 40 PVC
Grout Type	N/A
Bentonite Type	Chips
Filter Pack Type	#1 Sand
Screen Type/Slot Size	Schedule 40 PVC, 20-slot

One Civic Center Plaza
Suite 501
Poughkeepsie, NY 12601
(845) 454-2544

Monitoring Well Construction Diagram

Project #: __500008_____

Project Name/Site: _211-235 McGuinness Blvd, Brooklyn, NY_

Well #: __MW-2_____

Location/Coordinates: _____

Geologist: __Stephanie Lewison & Conor Tarbell_____

Elevation of Ground Surface: _____

Driller: ___HydroEnvironmental Solutions (HES)_____

Drilling Method:___Geoprobe_____

Drilling Fluid: ____None_____

Date Start: ___3-3-14_____ Date End: ___3-3-14_____

Depth of Outer Casing (BLS): _____

Depth of Inner Casing (BLS): _____

Notes: ____Well located just outside the building on the west side, near the divide between the Pep Boys service garage and the former Blockbuster vacant retail space._____

Elevations Relative to Land Surface

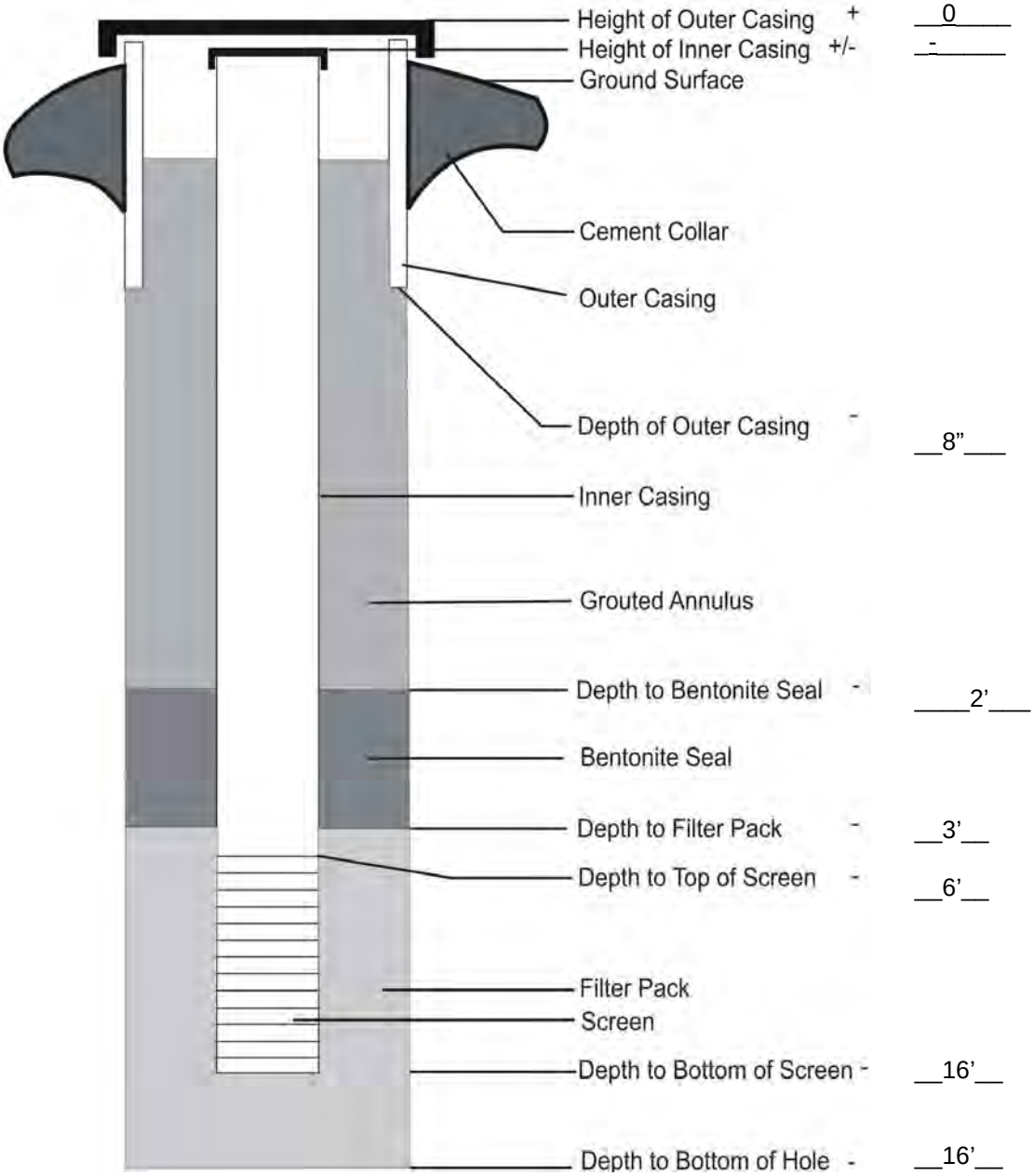

Macrocore Diameter	3.25"
Borehole Diameter	3.25"
Flush-to-grade Curb Box?	_X_Yes ___No
Stick-up Pipe?	___Yes _X_No
Outer Casing Diameter	5"
Outer Casing Material	Steel
Inner Casing Diameter	2"
Inner Casing Material	Schedule 40 PVC
Grout Type	N/A
Bentonite Type	Chips
Filter Pack Type	#1 Sand
Screen Type/Slot Size	Schedule 40 PVC, 20-slot

PVE Sheffler

One Civic Center Plaza
Suite 501
Poughkeepsie, NY 12601
(845) 454-2544

Monitoring Well Construction Diagram

Project #: __500008_____

Project Name/Site: _211-235 McGuinness Blvd, Brooklyn, NY_

Well #: __MW-3_____

Location/Coordinates: _____

Geologist: __Stephanie Lewison & Conor Tarbell_____

Elevation of Ground Surface: _____

Driller: ___HydroEnvironmental Solutions (HES)_____

Drilling Method:___Geoprobe_____

Drilling Fluid: ____None_____

Date Start: ___3-3-14_____ Date End: ___3-3-14_____

Depth of Outer Casing (BLS): _____

Depth of Inner Casing (BLS): _____

Notes: ____Well located just outside the building on the west side, near the divide between the Pep Boys service garage and the former Blockbuster vacant retail space._____

Elevations Relative to Land Surface

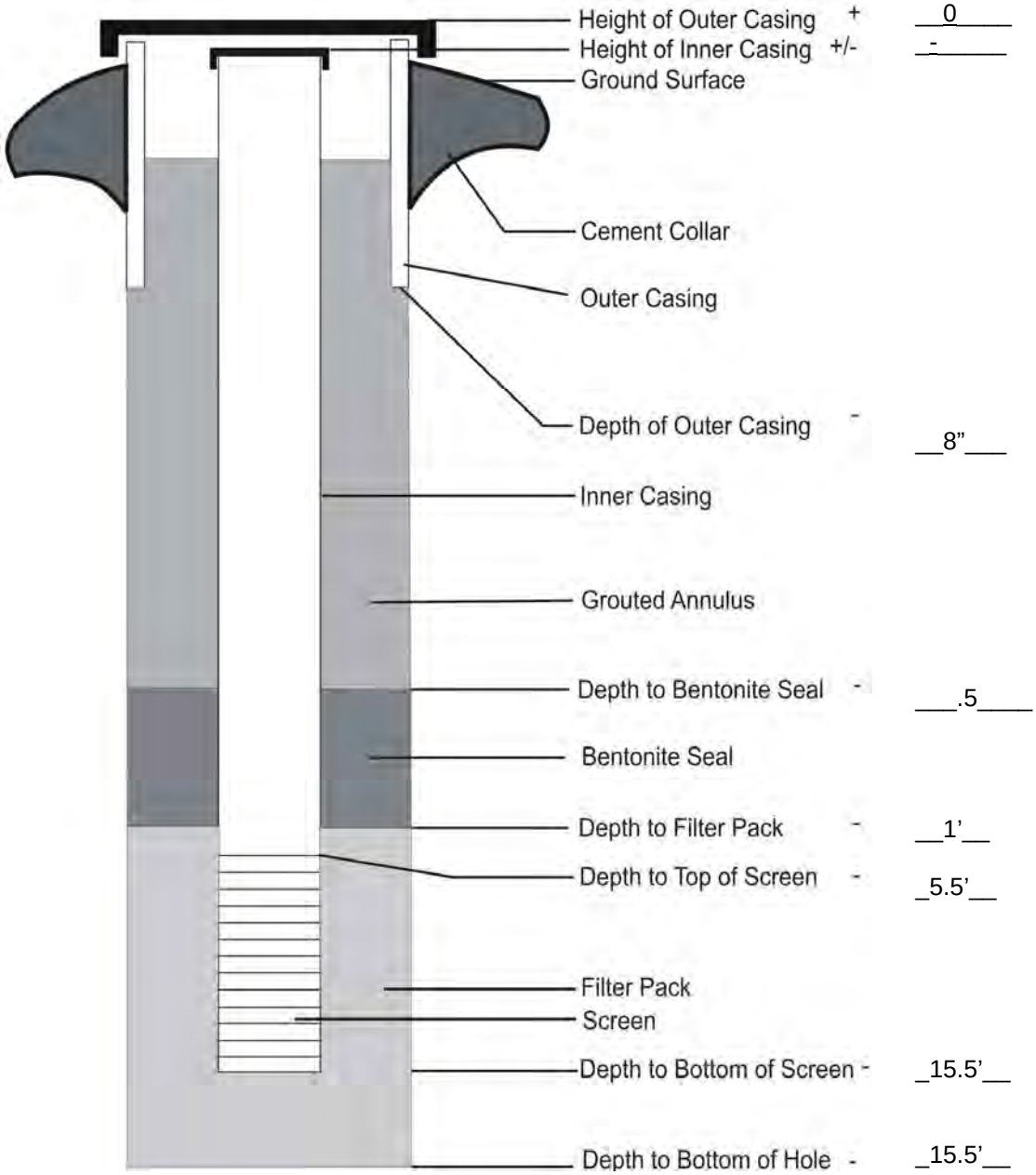

Macrocore Diameter	3.25"
Borehole Diameter	3.25"
Flush-to-grade Curb Box?	_X_Yes ___No
Stick-up Pipe?	___Yes _X_No
Outer Casing Diameter	5"
Outer Casing Material	Steel
Inner Casing Diameter	2"
Inner Casing Material	Schedule 40 PVC
Grout Type	N/A
Bentonite Type	Chips
Filter Pack Type	#1 Sand
Screen Type/Slot Size	Schedule 40 PVC, 20-slot

ANALYTICAL REPORTS

CENTEK LABORATORIES, LLC

143 Midler Park Drive * Syracuse, NY 13206
Phone (315) 431-9730 * Emergency 24/7 (315) 416-2752
NYSDOH ELAP Certificate No. 11830

Analytical Report

Stephanie Lewison
Conrad Geoscience Corp. / PVE Sheffler
1 Civic Center Plaza, Suite 501
Poughkeepsie, NY 12601

TEL: (845) 454-2544
FAX:

Wednesday, March 05, 2014
Order No.: C1402065

RE: McGuinness Blvd

Dear Stephanie Lewison:

Centek Laboratories, LLC received 3 sample(s) on 2/26/2014 for the analyses presented in the following report.

I certify that this data package is in compliance with the terms and conditions of the Contract, both technically and for completeness. Release of the data contained in this hardcopy data package and/or in the computer readable data submitted has been authorized by the Laboratory Manager or his designee, as verified by the following signature.

Centek Laboratories performs all analyses according to EPA, NIOSH or OSHA-approved analytical methods. Centek Laboratories is dedicated to providing quality analyses and exceptional customer service. All method blanks, laboratory spikes, and/or matrix spikes met quality assurance objective except as indicated in the case narrative. All samples were received and analyzed within the EPA recommended holding times. Test results are not Method Blank (MB) corrected for contamination.

We do our best to make our reporting format clear and understandable and hope you are thoroughly satisfied with our services. Please contact your client service representative at (315) 431-9730 or myself, if you would like any additional information regarding this report.

Thank you for using Centek Laboratories. This report can not be reproduced except in its entirety, without prior written authorization.

Sincerely,

William Dobbin
Lead Technical Director

Disclaimer: The test results and procedures utilized, and laboratory interpretations of the data obtained by Centek as contained in this report are believed by Centek to be accurate and reliable

for sample(s) tested. In accepting this report, the customer agrees that the full extent of any and all liability for actual and consequential damages of Centek for the services performed shall be equal to the fee charged to the customer for the services as liquidated damages. ELAP does not offer certification for the following parameters by this method at present time, they are: 4-ethyltoluene, ethyl acetate and propylene.

Centek Laboratories, LLC Terms and Conditions

Sample Submission

All samples sent to Centek Laboratories should be accompanied by our Request for Analysis Form or Chain of Custody Form. A Chain of Custody will be provided with each order shipped for all sampling events, or if needed, one is available at our website www.CentekLabs.com. Samples received after 3:00pm are considered to be a part of the next day's business.

Sample Media

Samples can be collected in an canister or a Tedlar bag. Depending on your analytical needs, Centek Laboratories may receive a bulk, liquid, soil or other matrix sample for headspace analysis.

Blanks

Every sample is run with a surrogate or tracer compound at a pre-established concentration. The surrogate compound run with each sample is used as a standard to measure the performance of each run of the instrument. If required, a Minican can be provided containing nitrogen to be run as a trip blank with your samples.

Sampling Equipment

Centek Laboratories will be happy to provide the canisters to carry-out your sampling event at no charge. The necessary accessories, such as regulators, tubing or personal sampling belts, are also provided to meet your sampling needs. The customer is responsible for all shipping charges to the client's destination and return shipping to the laboratory. Client assumes all responsibility for lost, stolen and any damages of equipment.

Turn Around time (TAT)

Centek Laboratories will provide results to its clients in one business-week by 6:00pm EST after receipt of samples. For example, if samples are received on a Monday they are due on the following Monday by 6:00pm EST. Results are faxed or emailed to the requested location indicated on the Chain of Custody. Non-routine analysis may require more than the one business-week turnaround time. Please confirm non-routine sample turnaround times.

Reporting

Results are emailed or faxed at no additional charge. A hard copy of the result report is mailed within 24 hours of the faxing or emailing of your results. Cat "B" like packages are within 3-4 weeks from time of analysis. Standard Electronic Disk Deliverables (EDD) is also available at no additional charge.

Payment Terms

Payment for all purchases shall be due within 30 days from date of invoice. The client agrees to pay a finance charge of 1.5% per month on the overdue balance and cost of collection, including attorney fees, if collection proceedings are necessary. You must have a completed credit application on file to extend credit. Purchase orders or checks information must be submitted for

us to release results

Rush Turnaround Samples

Expedited turn around times is available. Please confirm rush turnaround times with Client Services before submitting samples.

Applicable Surcharges for Rush Turnaround Samples:
Same day TAT = 200%
Next business day TAT by Noon = 150%
Next business day TAT by 6:00pm = 100%
Second business day TAT by 6:00pm = 75%
Third business day TAT by 6:00pm = 50%
Fourth business day TAT by 6:00pm = 35%
Fifth business day = Standard

Statement of Confidentiality

Centek Laboratories, LLC is aware of the importance of the confidentiality of results to many of our clients. Your name and data will be held in the strictest of confidence. We will not accept business that may constitute a conflict of interest. We commonly sign Confidential Nondisclosure Agreements with clients prior to beginning work. All research, results and reports will be kept strictly confidential. Secrecy Agreements and Disclosure Statements will be signed for the client if so specified. Results will be provided only to the addressee specified on the Chain of Custody Form submitted with the samples unless law requires release. Written permission is required from the addressee to release results to any other party.

Limitation on Liability

Centek Laboratories, LLC warrants the test results to be accurate to the methodology and sample type for each sample submitted to Centek Laboratories, LLC. In no event shall Centek Laboratories, LLC be liable for direct, indirect, special, punitive, incidental, exemplary or consequential damages, or any damages whatsoever, even if Centek Laboratories, LLC has been previously advised of the possibility of such damages whether in an action under contract, negligence, or any other theory, arising out of or in connection with the use, inability to use or performance of the information, services, products and materials available from the laboratory or this site. These limitations shall apply notwithstanding any failure of essential purpose of any limited remedy. Because some jurisdictions do not allow limitations on how long an implied warranty lasts, or the exclusion or limitation of liability for consequential or incidental damages, the above limitations may not apply to you. This is a comprehensive limitation of liability that applies to all damages of any kind, including (without limitation) compensatory, direct, indirect or consequential damages, loss of data, income or profit and or loss of or damage to property and claims of third parties.

CENTEK LABORATORIES, LLC

Sample Receipt Checklist

Client Name **CONRADGEO - POUGH** Date and Time Receive **2/26/2014**

Work Order Numbe **C1402065** Received by JDS

Checklist completed by [signature] 2-26-14 (Signature / Date) Reviewed by WD 2/26/14 (Initials / Date)

Matrix: Carrier name: FedEx

Shipping container/cooler in good condition?	Yes ☑	No ☐	Not Presen ☐
Custody seals intact on shippping container/cooler?	Yes ☐	No ☐	Not Presen ☑
Custody seals intact on sample bottles?	Yes ☐	No ☐	Not Presen ☑
Chain of custody present?	Yes ☑	No ☐	
Chain of custody signed when relinquished and received?	Yes ☑	No ☐	
Chain of custody agrees with sample labels?	Yes ☑	No ☐	
Samples in proper container/bottle?	Yes ☑	No ☐	
Sample containers intact?	Yes ☑	No ☐	
Sufficient sample volume for indicated test?	Yes ☑	No ☐	
All samples received within holding time?	Yes ☑	No ☐	
Container/Temp Blank temperature in compliance?	Yes ☑	No ☐	
Water - VOA vials have zero headspace?	No VOA vials submitted ☑	Yes ☐	No ☐
Water - pH acceptable upon receipt?	Yes ☐	No ☑	

Adjusted? _____ Checked by _____

Any No and/or NA (not applicable) response must be detailed in the comments section be

Client contacted _____ Date contacted: _____ Person contacted _____

Contacted by: _____ Regarding: _____

Comments: _____

Corrective Action _____

CENTEK LABORATORIES, LLC

Date: *10-Mar-14*

CLIENT: Conrad Geoscience Corp. / PVE Sheffler

Project: McGuinness Blvd

Lab Order: C1402065

CASE NARRATIVE

Samples were analyzed using the methods outlined in the following references:

Compendium of Methods for the Determination of Toxic Organic Compounds, Compendium Method TO-15, January 1999 and Centek Laboratories, LLC SOP TS-80:

All method blanks, laboratory spikes, and/or matrix spikes met quality assurance objective except as indicated in the corrective action report(s). All samples were received and analyzed within the EPA recommended holding times. Test results are not Method Blank (MB) corrected for contamination.

NYSDEC ASP samples:
Canisters should be evacuated to a reading of less than or equal to 50 millitorr prior to shipment to sampling personnel. The vacuum in the canister will be field checked prior to sampling, and must read 28" of Hg (±2", vacuum, absolute) before a sample can be collected. After the sample has been collected, the pressure of the canister will be read and recorded again, and must be 5" of Hg (±1", vacuum, absolute) for the sample to be valid. Once received at the laboratory, the canister vacuum should be confirmed to be 5" of Hg,±1". Please record and report the pressure/vacuum of received canisters on the sample receipt paperwork. A pressure/vacuum reading should also be taken just prior to the withdrawal of sample from the canister, and recorded on the sample preparation log sheet. All regulators are calibrated to meet these requirements before they leave the laboratory. However, due to environmental conditions and use of the equipment Centek can not guarantee that this criteria can always be achieved.

Centek Chain of Custody

Centek Laboratories
143 Midler Park Drive
Syracuse, NY 13206
315-431-9730
www.CentekLabs.com

Vapor Intrusion & IAQ

Site Name: McGuiness Blvd
Project: 560920
PO#: 560920
Quote # Q- SP / 130
Other: 4166 Sub-slab

Detection Limit		Report Level	
☐	5ppbv	☐	Level I
☒	1ug/M3	☐	Level II
☐	1ug/M3 +TCE .25	☐	Cat "B" Like

Turnaround Time:	Check One	Rush TAT Surcharge %	Due Date:
5 Business Days	☒	0%	
4 Business Days	☐	25%	
3 Business Days	☐	50%	
2 Business Days	☐	75%	
Next Day by 5pm	☐	100%	
Next Day by Noon	☐	150%	
Same Day	☐	200%	

Company: PVE Sheffler

Report to:
Address: One Civic Center Plaza Suite 501
City, State, Zip Poughkeepsie, NY 12601
Email: slewison@pvesheffler.com
Phone: 845-454-2544

Company:
Check Here If Same: ☒

Invoice to:
Address:
City, State, Zip
Email: talvarado@pvesheffler.com
Phone:

Sample ID	Date Sampled	Canister Number	Regulator Number	Analysis Request	Comments	Vacuum Start/Stop
SV-1	2-25-14/11:57-13:35	128	1160	TO-15 VOC		28" / 1.5
SV-2	2-25-14/12:30-14:19	558	1172	TO-15 VOC		30"+ / 3.5"
SV-3	2-25-14/13:05-14:48	189	338	TO-15 VOCs		28" / 3.5"

Chain of Custody	Print Name	Signature	Date/Time
Sampled by:	Stephanie Lewison		2-25/14:48
Relinquished by:	Stephanie Lewison		2-25/15:30
Received at Lab by:	Jan Saal		2-26-14

Courier: CIRCLE ONE
FedEx UPS Pickup/Dropoff

For LAB USE ONLY
Work Order # C1402065

*** By signing Centek Labs Chain of Custody, you are accepting Centek Labs Terms and Conditions listed on the reverse side.

Date: *10-Mar-14*

CENTEK LABORATORIES, LLC

CLIENT: Conrad Geoscience Corp. / PVE Sheffler
Project: McGuinness Blvd
Lab Order: C1402065

Work Order Sample Summary

Lab Sample ID	Client Sample ID	Tag Number	Collection Date	Date Received
C1402065-001A	SV-1	128,1160	2/25/2014	2/26/2014
C1402065-002A	SV-2	558,1172	2/25/2014	2/26/2014
C1402065-003A	SV-3	189,338	2/25/2014	2/26/2014

Centek Laboratories, LLC

10-Mar-14

Lab Order: C1402065
Client: Conrad Geoscience Corp. / PVE Sheffler
Project: McGuinness Blvd

DATES REPORT

Sample ID	Client Sample ID	Collection Date	Matrix	Test Name	TCLP Date	Prep Date	Analysis Date
C1402065-001A	SV-1	2/25/2014	Air	1ug/M3 by Method TO15			2/27/2014
				1ug/M3 by Method TO15			2/27/2014
C1402065-002A	SV-2			1ug/M3 by Method TO15			3/5/2014
				1ug/M3 by Method TO15			3/5/2014
				1ug/M3 by Method TO15			2/27/2014
				1ug/M3 by Method TO15			2/27/2014
C1402065-003A	SV-3			1ug/M3 by Method TO15			3/5/2014
				1ug/M3 by Method TO15			2/27/2014
				1ug/M3 by Method TO15			2/27/2014

Centek Laboratories, LLC

Date: *10-Mar-14*

CLIENT:	Conrad Geoscience Corp. / PVE Sheffler	**Client Sample ID:**	SV-1
Lab Order:	C1402065	**Tag Number:**	128,1160
Project:	McGuinness Blvd	**Collection Date:**	2/25/2014
Lab ID:	C1402065-001A	**Matrix:**	AIR

Analyses	Result	**Limit	Qual	Units	DF	Date Analyzed
FIELD PARAMETERS		**FLD**				Analyst:
Lab Vacuum In	-2			"Hg		2/26/2014
Lab Vacuum Out	-30			"Hg		2/26/2014
1UG/M3 BY METHOD TO15		**TO-15**				Analyst: **RJP**
1,1,1-Trichloroethane	< 0.15	0.15		ppbV	1	2/27/2014 4:24:00 PM
1,1,2,2-Tetrachloroethane	< 0.15	0.15		ppbV	1	2/27/2014 4:24:00 PM
1,1,2-Trichloroethane	< 0.15	0.15		ppbV	1	2/27/2014 4:24:00 PM
1,1-Dichloroethane	< 0.15	0.15		ppbV	1	2/27/2014 4:24:00 PM
1,1-Dichloroethene	< 0.15	0.15		ppbV	1	2/27/2014 4:24:00 PM
1,2,4-Trichlorobenzene	< 0.15	0.15		ppbV	1	2/27/2014 4:24:00 PM
1,2,4-Trimethylbenzene	0.76	0.15		ppbV	1	2/27/2014 4:24:00 PM
1,2-Dibromoethane	< 0.15	0.15		ppbV	1	2/27/2014 4:24:00 PM
1,2-Dichlorobenzene	< 0.15	0.15		ppbV	1	2/27/2014 4:24:00 PM
1,2-Dichloroethane	< 0.15	0.15		ppbV	1	2/27/2014 4:24:00 PM
1,2-Dichloropropane	< 0.15	0.15		ppbV	1	2/27/2014 4:24:00 PM
1,3,5-Trimethylbenzene	0.25	0.15		ppbV	1	2/27/2014 4:24:00 PM
1,3-butadiene	< 0.15	0.15		ppbV	1	2/27/2014 4:24:00 PM
1,3-Dichlorobenzene	< 0.15	0.15		ppbV	1	2/27/2014 4:24:00 PM
1,4-Dichlorobenzene	< 0.15	0.15		ppbV	1	2/27/2014 4:24:00 PM
1,4-Dioxane	< 0.30	0.30		ppbV	1	2/27/2014 4:24:00 PM
2,2,4-trimethylpentane	0.41	0.15		ppbV	1	2/27/2014 4:24:00 PM
4-ethyltoluene	0.30	0.15		ppbV	1	2/27/2014 4:24:00 PM
Acetone	17	3.0		ppbV	10	2/27/2014 9:21:00 PM
Allyl chloride	< 0.15	0.15		ppbV	1	2/27/2014 4:24:00 PM
Benzene	0.83	0.15		ppbV	1	2/27/2014 4:24:00 PM
Benzyl chloride	< 0.15	0.15		ppbV	1	2/27/2014 4:24:00 PM
Bromodichloromethane	< 0.15	0.15		ppbV	1	2/27/2014 4:24:00 PM
Bromoform	< 0.15	0.15		ppbV	1	2/27/2014 4:24:00 PM
Bromomethane	< 0.15	0.15		ppbV	1	2/27/2014 4:24:00 PM
Carbon disulfide	0.12	0.15	J	ppbV	1	2/27/2014 4:24:00 PM
Carbon tetrachloride	< 0.15	0.15		ppbV	1	2/27/2014 4:24:00 PM
Chlorobenzene	< 0.15	0.15		ppbV	1	2/27/2014 4:24:00 PM
Chloroethane	< 0.15	0.15		ppbV	1	2/27/2014 4:24:00 PM
Chloroform	0.10	0.15	J	ppbV	1	2/27/2014 4:24:00 PM
Chloromethane	< 0.15	0.15		ppbV	1	2/27/2014 4:24:00 PM
cis-1,2-Dichloroethene	< 0.15	0.15		ppbV	1	2/27/2014 4:24:00 PM
cis-1,3-Dichloropropene	< 0.15	0.15		ppbV	1	2/27/2014 4:24:00 PM
Cyclohexane	0.78	0.15		ppbV	1	2/27/2014 4:24:00 PM
Dibromochloromethane	< 0.15	0.15		ppbV	1	2/27/2014 4:24:00 PM
Ethyl acetate	< 0.25	0.25		ppbV	1	2/27/2014 4:24:00 PM

Qualifiers:

**	Reporting Limit	.	Results reported are not blank corrected
B	Analyte detected in the associated Method Blank	E	Value above quantitation range
H	Holding times for preparation or analysis exceeded	J	Analyte detected at or below quantitation limits
JN	Non-routine analyte. Quantitation estimated.	ND	Not Detected at the Reporting Limit
S	Spike Recovery outside accepted recovery limits		

Centek Laboratories, LLC

Date: *10-Mar-14*

CLIENT:	Conrad Geoscience Corp. / PVE Sheffler	**Client Sample ID:**	SV-1
Lab Order:	C1402065	**Tag Number:**	128,1160
Project:	McGuinness Blvd	**Collection Date:**	2/25/2014
Lab ID:	C1402065-001A	**Matrix:**	AIR

Analyses	Result	**Limit	Qual	Units	DF	Date Analyzed
1UG/M3 BY METHOD TO15		**TO-15**				Analyst: **RJP**
Ethylbenzene	0.42	0.15		ppbV	1	2/27/2014 4:24:00 PM
Freon 11	0.40	0.15		ppbV	1	2/27/2014 4:24:00 PM
Freon 113	< 0.15	0.15		ppbV	1	2/27/2014 4:24:00 PM
Freon 114	< 0.15	0.15		ppbV	1	2/27/2014 4:24:00 PM
Freon 12	0.57	0.15		ppbV	1	2/27/2014 4:24:00 PM
Heptane	0.39	0.15		ppbV	1	2/27/2014 4:24:00 PM
Hexachloro-1,3-butadiene	< 0.15	0.15		ppbV	1	2/27/2014 4:24:00 PM
Hexane	1.5	0.15		ppbV	1	2/27/2014 4:24:00 PM
Isopropyl alcohol	2.4	1.5		ppbV	10	2/27/2014 9:21:00 PM
m&p-Xylene	1.3	0.30		ppbV	1	2/27/2014 4:24:00 PM
Methyl Butyl Ketone	< 0.30	0.30		ppbV	1	2/27/2014 4:24:00 PM
Methyl Ethyl Ketone	0.66	0.30		ppbV	1	2/27/2014 4:24:00 PM
Methyl Isobutyl Ketone	< 0.30	0.30		ppbV	1	2/27/2014 4:24:00 PM
Methyl tert-butyl ether	< 0.15	0.15		ppbV	1	2/27/2014 4:24:00 PM
Methylene chloride	0.62	0.15		ppbV	1	2/27/2014 4:24:00 PM
o-Xylene	0.32	0.15		ppbV	1	2/27/2014 4:24:00 PM
Propylene	< 0.15	0.15		ppbV	1	2/27/2014 4:24:00 PM
Styrene	0.11	0.15	J	ppbV	1	2/27/2014 4:24:00 PM
Tetrachloroethylene	< 0.15	0.15		ppbV	1	2/27/2014 4:24:00 PM
Tetrahydrofuran	< 0.15	0.15		ppbV	1	2/27/2014 4:24:00 PM
Toluene	2.1	0.15		ppbV	1	2/27/2014 4:24:00 PM
trans-1,2-Dichloroethene	< 0.15	0.15		ppbV	1	2/27/2014 4:24:00 PM
trans-1,3-Dichloropropene	< 0.15	0.15		ppbV	1	2/27/2014 4:24:00 PM
Trichloroethene	< 0.15	0.15		ppbV	1	2/27/2014 4:24:00 PM
Vinyl acetate	< 0.15	0.15		ppbV	1	2/27/2014 4:24:00 PM
Vinyl Bromide	< 0.15	0.15		ppbV	1	2/27/2014 4:24:00 PM
Vinyl chloride	< 0.15	0.15		ppbV	1	2/27/2014 4:24:00 PM
Surr: Bromofluorobenzene	97.0	70-130		%REC	1	2/27/2014 4:24:00 PM

Qualifiers:

**	Reporting Limit	.	Results reported are not blank corrected
B	Analyte detected in the associated Method Blank	E	Value above quantitation range
H	Holding times for preparation or analysis exceeded	J	Analyte detected at or below quantitation limits
JN	Non-routine analyte. Quantitation estimated.	ND	Not Detected at the Reporting Limit
S	Spike Recovery outside accepted recovery limits		

Centek Laboratories, LLC

Date: *10-Mar-14*

CLIENT:	Conrad Geoscience Corp. / PVE Sheffler	**Client Sample ID:**	SV-2
Lab Order:	C1402065	**Tag Number:**	558,1172
Project:	McGuinness Blvd	**Collection Date:**	2/25/2014
Lab ID:	C1402065-002A	**Matrix:**	AIR

Analyses	Result	**Limit	Qual	Units	DF	Date Analyzed
FIELD PARAMETERS		**FLD**				Analyst:
Lab Vacuum In	-3			"Hg		2/26/2014
Lab Vacuum Out	-30			"Hg		2/26/2014
1UG/M3 BY METHOD TO15		**TO-15**				Analyst: **RJP**
1,1,1-Trichloroethane	< 0.15	0.15		ppbV	1	2/27/2014 5:03:00 PM
1,1,2,2-Tetrachloroethane	< 0.15	0.15		ppbV	1	2/27/2014 5:03:00 PM
1,1,2-Trichloroethane	< 0.15	0.15		ppbV	1	2/27/2014 5:03:00 PM
1,1-Dichloroethane	< 0.15	0.15		ppbV	1	2/27/2014 5:03:00 PM
1,1-Dichloroethene	< 0.15	0.15		ppbV	1	2/27/2014 5:03:00 PM
1,2,4-Trichlorobenzene	< 0.15	0.15		ppbV	1	2/27/2014 5:03:00 PM
1,2,4-Trimethylbenzene	1.1	0.15		ppbV	1	2/27/2014 5:03:00 PM
1,2-Dibromoethane	< 0.15	0.15		ppbV	1	2/27/2014 5:03:00 PM
1,2-Dichlorobenzene	< 0.15	0.15		ppbV	1	2/27/2014 5:03:00 PM
1,2-Dichloroethane	< 0.15	0.15		ppbV	1	2/27/2014 5:03:00 PM
1,2-Dichloropropane	< 0.15	0.15		ppbV	1	2/27/2014 5:03:00 PM
1,3,5-Trimethylbenzene	0.39	0.15		ppbV	1	2/27/2014 5:03:00 PM
1,3-butadiene	< 0.15	0.15		ppbV	1	2/27/2014 5:03:00 PM
1,3-Dichlorobenzene	< 0.15	0.15		ppbV	1	2/27/2014 5:03:00 PM
1,4-Dichlorobenzene	< 0.15	0.15		ppbV	1	2/27/2014 5:03:00 PM
1,4-Dioxane	< 0.30	0.30		ppbV	1	2/27/2014 5:03:00 PM
2,2,4-trimethylpentane	150	120		ppbV	810	3/5/2014 1:14:00 AM
4-ethyltoluene	0.65	0.15		ppbV	1	2/27/2014 5:03:00 PM
Acetone	130	240	J	ppbV	810	3/5/2014 1:14:00 AM
Allyl chloride	< 0.15	0.15		ppbV	1	2/27/2014 5:03:00 PM
Benzene	970	120		ppbV	810	3/5/2014 1:14:00 AM
Benzyl chloride	< 0.15	0.15		ppbV	1	2/27/2014 5:03:00 PM
Bromodichloromethane	< 0.15	0.15		ppbV	1	2/27/2014 5:03:00 PM
Bromoform	< 0.15	0.15		ppbV	1	2/27/2014 5:03:00 PM
Bromomethane	< 0.15	0.15		ppbV	1	2/27/2014 5:03:00 PM
Carbon disulfide	2.2	1.5		ppbV	10	2/27/2014 9:58:00 PM
Carbon tetrachloride	< 0.15	0.15		ppbV	1	2/27/2014 5:03:00 PM
Chlorobenzene	< 0.15	0.15		ppbV	1	2/27/2014 5:03:00 PM
Chloroethane	< 0.15	0.15		ppbV	1	2/27/2014 5:03:00 PM
Chloroform	< 0.15	0.15		ppbV	1	2/27/2014 5:03:00 PM
Chloromethane	< 0.15	0.15		ppbV	1	2/27/2014 5:03:00 PM
cis-1,2-Dichloroethene	< 0.15	0.15		ppbV	1	2/27/2014 5:03:00 PM
cis-1,3-Dichloropropene	< 0.15	0.15		ppbV	1	2/27/2014 5:03:00 PM
Cyclohexane	2600	250		ppbV	1640	3/5/2014 1:52:00 AM
Dibromochloromethane	< 0.15	0.15		ppbV	1	2/27/2014 5:03:00 PM
Ethyl acetate	< 0.25	0.25		ppbV	1	2/27/2014 5:03:00 PM

Qualifiers:

**	Reporting Limit	.	Results reported are not blank corrected
B	Analyte detected in the associated Method Blank	E	Value above quantitation range
H	Holding times for preparation or analysis exceeded	J	Analyte detected at or below quantitation limits
JN	Non-routine analyte. Quantitation estimated.	ND	Not Detected at the Reporting Limit
S	Spike Recovery outside accepted recovery limits		

Centek Laboratories, LLC

Date: *10-Mar-14*

CLIENT:	Conrad Geoscience Corp. / PVE Sheffler	**Client Sample ID:**	SV-2
Lab Order:	C1402065	**Tag Number:**	558,1172
Project:	McGuinness Blvd	**Collection Date:**	2/25/2014
Lab ID:	C1402065-002A	**Matrix:**	AIR

Analyses	Result	**Limit	Qual	Units	DF	Date Analyzed
1UG/M3 BY METHOD TO15		**TO-15**				Analyst: **RJP**
Ethylbenzene	< 0.15	0.15		ppbV	1	2/27/2014 5:03:00 PM
Freon 11	0.27	0.15		ppbV	1	2/27/2014 5:03:00 PM
Freon 113	< 0.15	0.15		ppbV	1	2/27/2014 5:03:00 PM
Freon 114	< 0.15	0.15		ppbV	1	2/27/2014 5:03:00 PM
Freon 12	0.54	0.15		ppbV	1	2/27/2014 5:03:00 PM
Heptane	570	120		ppbV	810	3/5/2014 1:14:00 AM
Hexachloro-1,3-butadiene	< 0.15	0.15		ppbV	1	2/27/2014 5:03:00 PM
Hexane	1100	120		ppbV	810	3/5/2014 1:14:00 AM
Isopropyl alcohol	< 0.15	0.15		ppbV	1	2/27/2014 5:03:00 PM
m&p-Xylene	< 0.30	0.30		ppbV	1	2/27/2014 5:03:00 PM
Methyl Butyl Ketone	< 0.30	0.30		ppbV	1	2/27/2014 5:03:00 PM
Methyl Ethyl Ketone	< 0.30	0.30		ppbV	1	2/27/2014 5:03:00 PM
Methyl Isobutyl Ketone	< 0.30	0.30		ppbV	1	2/27/2014 5:03:00 PM
Methyl tert-butyl ether	< 0.15	0.15		ppbV	1	2/27/2014 5:03:00 PM
Methylene chloride	1.7	0.15		ppbV	1	2/27/2014 5:03:00 PM
o-Xylene	< 0.15	0.15		ppbV	1	2/27/2014 5:03:00 PM
Propylene	< 0.15	0.15		ppbV	1	2/27/2014 5:03:00 PM
Styrene	< 0.15	0.15		ppbV	1	2/27/2014 5:03:00 PM
Tetrachloroethylene	< 0.15	0.15		ppbV	1	2/27/2014 5:03:00 PM
Tetrahydrofuran	< 0.15	0.15		ppbV	1	2/27/2014 5:03:00 PM
Toluene	23	1.5		ppbV	10	2/27/2014 9:58:00 PM
trans-1,2-Dichloroethene	< 0.15	0.15		ppbV	1	2/27/2014 5:03:00 PM
trans-1,3-Dichloropropene	< 0.15	0.15		ppbV	1	2/27/2014 5:03:00 PM
Trichloroethene	< 0.15	0.15		ppbV	1	2/27/2014 5:03:00 PM
Vinyl acetate	< 0.15	0.15		ppbV	1	2/27/2014 5:03:00 PM
Vinyl Bromide	< 0.15	0.15		ppbV	1	2/27/2014 5:03:00 PM
Vinyl chloride	< 0.15	0.15		ppbV	1	2/27/2014 5:03:00 PM
Surr: Bromofluorobenzene	165	70-130	S	%REC	1	2/27/2014 5:03:00 PM
Surr: Bromofluorobenzene	98.0	70-130		%REC	10	2/27/2014 9:58:00 PM

Qualifiers:

**	Reporting Limit	.	Results reported are not blank corrected
B	Analyte detected in the associated Method Blank	E	Value above quantitation range
H	Holding times for preparation or analysis exceeded	J	Analyte detected at or below quantitation limits
JN	Non-routine analyte. Quantitation estimated.	ND	Not Detected at the Reporting Limit
S	Spike Recovery outside accepted recovery limits		

Centek Laboratories, LLC

Date: *10-Mar-14*

CLIENT:	Conrad Geoscience Corp. / PVE Sheffler	**Client Sample ID:**	SV-3
Lab Order:	C1402065	**Tag Number:**	189,338
Project:	McGuinness Blvd	**Collection Date:**	2/25/2014
Lab ID:	C1402065-003A	**Matrix:**	AIR

Analyses	Result	**Limit	Qual	Units	DF	Date Analyzed
FIELD PARAMETERS		**FLD**				Analyst:
Lab Vacuum In	-2.5			"Hg		2/26/2014
Lab Vacuum Out	-30			"Hg		2/26/2014
1UG/M3 BY METHOD TO15		**TO-15**				Analyst: **RJP**
1,1,1-Trichloroethane	< 0.15	0.15		ppbV	1	2/27/2014 5:42:00 PM
1,1,2,2-Tetrachloroethane	< 0.15	0.15		ppbV	1	2/27/2014 5:42:00 PM
1,1,2-Trichloroethane	< 0.15	0.15		ppbV	1	2/27/2014 5:42:00 PM
1,1-Dichloroethane	< 0.15	0.15		ppbV	1	2/27/2014 5:42:00 PM
1,1-Dichloroethene	< 0.15	0.15		ppbV	1	2/27/2014 5:42:00 PM
1,2,4-Trichlorobenzene	< 0.15	0.15		ppbV	1	2/27/2014 5:42:00 PM
1,2,4-Trimethylbenzene	1.2	0.15		ppbV	1	2/27/2014 5:42:00 PM
1,2-Dibromoethane	< 0.15	0.15		ppbV	1	2/27/2014 5:42:00 PM
1,2-Dichlorobenzene	< 0.15	0.15		ppbV	1	2/27/2014 5:42:00 PM
1,2-Dichloroethane	< 0.15	0.15		ppbV	1	2/27/2014 5:42:00 PM
1,2-Dichloropropane	< 0.15	0.15		ppbV	1	2/27/2014 5:42:00 PM
1,3,5-Trimethylbenzene	0.35	0.15		ppbV	1	2/27/2014 5:42:00 PM
1,3-butadiene	< 0.15	0.15		ppbV	1	2/27/2014 5:42:00 PM
1,3-Dichlorobenzene	< 0.15	0.15		ppbV	1	2/27/2014 5:42:00 PM
1,4-Dichlorobenzene	< 0.15	0.15		ppbV	1	2/27/2014 5:42:00 PM
1,4-Dioxane	0.28	0.30	J	ppbV	1	2/27/2014 5:42:00 PM
2,2,4-trimethylpentane	0.76	0.15		ppbV	1	2/27/2014 5:42:00 PM
4-ethyltoluene	0.32	0.15		ppbV	1	2/27/2014 5:42:00 PM
Acetone	330	81		ppbV	270	3/5/2014 2:28:00 AM
Allyl chloride	< 0.15	0.15		ppbV	1	2/27/2014 5:42:00 PM
Benzene	1.5	0.15		ppbV	1	2/27/2014 5:42:00 PM
Benzyl chloride	< 0.15	0.15		ppbV	1	2/27/2014 5:42:00 PM
Bromodichloromethane	0.21	0.15		ppbV	1	2/27/2014 5:42:00 PM
Bromoform	< 0.15	0.15		ppbV	1	2/27/2014 5:42:00 PM
Bromomethane	< 0.15	0.15		ppbV	1	2/27/2014 5:42:00 PM
Carbon disulfide	3.5	1.5		ppbV	10	2/27/2014 10:35:00 PM
Carbon tetrachloride	< 0.15	0.15		ppbV	1	2/27/2014 5:42:00 PM
Chlorobenzene	< 0.15	0.15		ppbV	1	2/27/2014 5:42:00 PM
Chloroethane	< 0.15	0.15		ppbV	1	2/27/2014 5:42:00 PM
Chloroform	5.5	1.5		ppbV	10	2/27/2014 10:35:00 PM
Chloromethane	< 0.15	0.15		ppbV	1	2/27/2014 5:42:00 PM
cis-1,2-Dichloroethene	< 0.15	0.15		ppbV	1	2/27/2014 5:42:00 PM
cis-1,3-Dichloropropene	< 0.15	0.15		ppbV	1	2/27/2014 5:42:00 PM
Cyclohexane	19	1.5		ppbV	10	2/27/2014 10:35:00 PM
Dibromochloromethane	< 0.15	0.15		ppbV	1	2/27/2014 5:42:00 PM
Ethyl acetate	< 0.25	0.25		ppbV	1	2/27/2014 5:42:00 PM

Qualifiers:

**	Reporting Limit	.	Results reported are not blank corrected
B	Analyte detected in the associated Method Blank	E	Value above quantitation range
H	Holding times for preparation or analysis exceeded	J	Analyte detected at or below quantitation limits
JN	Non-routine analyte. Quantitation estimated.	ND	Not Detected at the Reporting Limit
S	Spike Recovery outside accepted recovery limits		

Centek Laboratories, LLC

Date: *10-Mar-14*

CLIENT:	Conrad Geoscience Corp. / PVE Sheffler	**Client Sample ID:**	SV-3
Lab Order:	C1402065	**Tag Number:**	189,338
Project:	McGuinness Blvd	**Collection Date:**	2/25/2014
Lab ID:	C1402065-003A	**Matrix:**	AIR

Analyses	Result	**Limit	Qual	Units	DF	Date Analyzed
1UG/M3 BY METHOD TO15		**TO-15**				Analyst: **RJP**
Ethylbenzene	4.0	1.5		ppbV	10	2/27/2014 10:35:00 PM
Freon 11	3.0	1.5		ppbV	10	2/27/2014 10:35:00 PM
Freon 113	< 0.15	0.15		ppbV	1	2/27/2014 5:42:00 PM
Freon 114	< 0.15	0.15		ppbV	1	2/27/2014 5:42:00 PM
Freon 12	0.53	0.15		ppbV	1	2/27/2014 5:42:00 PM
Heptane	2.3	1.5		ppbV	10	2/27/2014 10:35:00 PM
Hexachloro-1,3-butadiene	< 0.15	0.15		ppbV	1	2/27/2014 5:42:00 PM
Hexane	12	1.5		ppbV	10	2/27/2014 10:35:00 PM
Isopropyl alcohol	< 0.15	0.15		ppbV	1	2/27/2014 5:42:00 PM
m&p-Xylene	8.0	3.0		ppbV	10	2/27/2014 10:35:00 PM
Methyl Butyl Ketone	< 0.30	0.30		ppbV	1	2/27/2014 5:42:00 PM
Methyl Ethyl Ketone	7.5	3.0		ppbV	10	2/27/2014 10:35:00 PM
Methyl Isobutyl Ketone	< 0.30	0.30		ppbV	1	2/27/2014 5:42:00 PM
Methyl tert-butyl ether	< 0.15	0.15		ppbV	1	2/27/2014 5:42:00 PM
Methylene chloride	0.32	0.15		ppbV	1	2/27/2014 5:42:00 PM
o-Xylene	1.4	0.15		ppbV	1	2/27/2014 5:42:00 PM
Propylene	< 0.15	0.15		ppbV	1	2/27/2014 5:42:00 PM
Styrene	< 0.15	0.15		ppbV	1	2/27/2014 5:42:00 PM
Tetrachloroethylene	0.32	0.15		ppbV	1	2/27/2014 5:42:00 PM
Tetrahydrofuran	< 0.15	0.15		ppbV	1	2/27/2014 5:42:00 PM
Toluene	18	1.5		ppbV	10	2/27/2014 10:35:00 PM
trans-1,2-Dichloroethene	< 0.15	0.15		ppbV	1	2/27/2014 5:42:00 PM
trans-1,3-Dichloropropene	< 0.15	0.15		ppbV	1	2/27/2014 5:42:00 PM
Trichloroethene	0.13	0.15	J	ppbV	1	2/27/2014 5:42:00 PM
Vinyl acetate	< 0.15	0.15		ppbV	1	2/27/2014 5:42:00 PM
Vinyl Bromide	< 0.15	0.15		ppbV	1	2/27/2014 5:42:00 PM
Vinyl chloride	< 0.15	0.15		ppbV	1	2/27/2014 5:42:00 PM
Surr: Bromofluorobenzene	95.0	70-130		%REC	1	2/27/2014 5:42:00 PM

Qualifiers:

**	Reporting Limit	.	Results reported are not blank corrected
B	Analyte detected in the associated Method Blank	E	Value above quantitation range
H	Holding times for preparation or analysis exceeded	J	Analyte detected at or below quantitation limits
JN	Non-routine analyte. Quantitation estimated.	ND	Not Detected at the Reporting Limit
S	Spike Recovery outside accepted recovery limits		

Centek Laboratories, LLC

Date: *10-Mar-14*

CLIENT:	Conrad Geoscience Corp. / PVE Sheffler	**Client Sample ID:**	SV-1
Lab Order:	C1402065	**Tag Number:**	128,1160
Project:	McGuinness Blvd	**Collection Date:**	2/25/2014
Lab ID:	C1402065-001A	**Matrix:**	AIR

Analyses	Result	**Limit	Qual	Units	DF	Date Analyzed
1UG/M3 BY METHOD TO15		**TO-15**				Analyst: **RJP**
1,1,1-Trichloroethane	< 0.83	0.83		ug/m3	1	2/27/2014 4:24:00 PM
1,1,2,2-Tetrachloroethane	< 1.0	1.0		ug/m3	1	2/27/2014 4:24:00 PM
1,1,2-Trichloroethane	< 0.83	0.83		ug/m3	1	2/27/2014 4:24:00 PM
1,1-Dichloroethane	< 0.62	0.62		ug/m3	1	2/27/2014 4:24:00 PM
1,1-Dichloroethene	< 0.60	0.60		ug/m3	1	2/27/2014 4:24:00 PM
1,2,4-Trichlorobenzene	< 1.1	1.1		ug/m3	1	2/27/2014 4:24:00 PM
1,2,4-Trimethylbenzene	3.8	0.75		ug/m3	1	2/27/2014 4:24:00 PM
1,2-Dibromoethane	< 1.2	1.2		ug/m3	1	2/27/2014 4:24:00 PM
1,2-Dichlorobenzene	< 0.92	0.92		ug/m3	1	2/27/2014 4:24:00 PM
1,2-Dichloroethane	< 0.62	0.62		ug/m3	1	2/27/2014 4:24:00 PM
1,2-Dichloropropane	< 0.70	0.70		ug/m3	1	2/27/2014 4:24:00 PM
1,3,5-Trimethylbenzene	1.2	0.75		ug/m3	1	2/27/2014 4:24:00 PM
1,3-butadiene	< 0.34	0.34		ug/m3	1	2/27/2014 4:24:00 PM
1,3-Dichlorobenzene	< 0.92	0.92		ug/m3	1	2/27/2014 4:24:00 PM
1,4-Dichlorobenzene	< 0.92	0.92		ug/m3	1	2/27/2014 4:24:00 PM
1,4-Dioxane	< 1.1	1.1		ug/m3	1	2/27/2014 4:24:00 PM
2,2,4-trimethylpentane	1.9	0.71		ug/m3	1	2/27/2014 4:24:00 PM
4-ethyltoluene	1.5	0.75		ug/m3	1	2/27/2014 4:24:00 PM
Acetone	41	7.2		ug/m3	10	2/27/2014 9:21:00 PM
Allyl chloride	< 0.48	0.48		ug/m3	1	2/27/2014 4:24:00 PM
Benzene	2.7	0.49		ug/m3	1	2/27/2014 4:24:00 PM
Benzyl chloride	< 0.88	0.88		ug/m3	1	2/27/2014 4:24:00 PM
Bromodichloromethane	< 1.0	1.0		ug/m3	1	2/27/2014 4:24:00 PM
Bromoform	< 1.6	1.6		ug/m3	1	2/27/2014 4:24:00 PM
Bromomethane	< 0.59	0.59		ug/m3	1	2/27/2014 4:24:00 PM
Carbon disulfide	0.38	0.47	J	ug/m3	1	2/27/2014 4:24:00 PM
Carbon tetrachloride	< 0.96	0.96		ug/m3	1	2/27/2014 4:24:00 PM
Chlorobenzene	< 0.70	0.70		ug/m3	1	2/27/2014 4:24:00 PM
Chloroethane	< 0.40	0.40		ug/m3	1	2/27/2014 4:24:00 PM
Chloroform	0.50	0.74	J	ug/m3	1	2/27/2014 4:24:00 PM
Chloromethane	< 0.31	0.31		ug/m3	1	2/27/2014 4:24:00 PM
cis-1,2-Dichloroethene	< 0.60	0.60		ug/m3	1	2/27/2014 4:24:00 PM
cis-1,3-Dichloropropene	< 0.69	0.69		ug/m3	1	2/27/2014 4:24:00 PM
Cyclohexane	2.7	0.52		ug/m3	1	2/27/2014 4:24:00 PM
Dibromochloromethane	< 1.3	1.3		ug/m3	1	2/27/2014 4:24:00 PM
Ethyl acetate	< 0.92	0.92		ug/m3	1	2/27/2014 4:24:00 PM
Ethylbenzene	1.9	0.66		ug/m3	1	2/27/2014 4:24:00 PM
Freon 11	2.3	0.86		ug/m3	1	2/27/2014 4:24:00 PM
Freon 113	< 1.2	1.2		ug/m3	1	2/27/2014 4:24:00 PM
Freon 114	< 1.1	1.1		ug/m3	1	2/27/2014 4:24:00 PM

Qualifiers:

**	Reporting Limit	.	Results reported are not blank corrected
B	Analyte detected in the associated Method Blank	E	Value above quantitation range
H	Holding times for preparation or analysis exceeded	J	Analyte detected at or below quantitation limits
JN	Non-routine analyte. Quantitation estimated.	ND	Not Detected at the Reporting Limit
S	Spike Recovery outside accepted recovery limits		

Centek Laboratories, LLC

Date: *10-Mar-14*

CLIENT:	Conrad Geoscience Corp. / PVE Sheffler	**Client Sample ID:**	SV-1
Lab Order:	C1402065	**Tag Number:**	128,1160
Project:	McGuinness Blvd	**Collection Date:**	2/25/2014
Lab ID:	C1402065-001A	**Matrix:**	AIR

Analyses	Result	**Limit	Qual	Units	DF	Date Analyzed
1UG/M3 BY METHOD TO15		**TO-15**				Analyst: **RJP**
Freon 12	2.9	0.75		ug/m3	1	2/27/2014 4:24:00 PM
Heptane	1.6	0.62		ug/m3	1	2/27/2014 4:24:00 PM
Hexachloro-1,3-butadiene	< 1.6	1.6		ug/m3	1	2/27/2014 4:24:00 PM
Hexane	5.5	0.54		ug/m3	1	2/27/2014 4:24:00 PM
Isopropyl alcohol	6.0	3.7		ug/m3	10	2/27/2014 9:21:00 PM
m&p-Xylene	5.6	1.3		ug/m3	1	2/27/2014 4:24:00 PM
Methyl Butyl Ketone	< 1.2	1.2		ug/m3	1	2/27/2014 4:24:00 PM
Methyl Ethyl Ketone	2.0	0.90		ug/m3	1	2/27/2014 4:24:00 PM
Methyl Isobutyl Ketone	< 1.2	1.2		ug/m3	1	2/27/2014 4:24:00 PM
Methyl tert-butyl ether	< 0.55	0.55		ug/m3	1	2/27/2014 4:24:00 PM
Methylene chloride	2.2	0.53		ug/m3	1	2/27/2014 4:24:00 PM
o-Xylene	1.4	0.66		ug/m3	1	2/27/2014 4:24:00 PM
Propylene	< 0.26	0.26		ug/m3	1	2/27/2014 4:24:00 PM
Styrene	0.48	0.65	J	ug/m3	1	2/27/2014 4:24:00 PM
Tetrachloroethylene	< 1.0	1.0		ug/m3	1	2/27/2014 4:24:00 PM
Tetrahydrofuran	< 0.45	0.45		ug/m3	1	2/27/2014 4:24:00 PM
Toluene	8.1	0.57		ug/m3	1	2/27/2014 4:24:00 PM
trans-1,2-Dichloroethene	< 0.60	0.60		ug/m3	1	2/27/2014 4:24:00 PM
trans-1,3-Dichloropropene	< 0.69	0.69		ug/m3	1	2/27/2014 4:24:00 PM
Trichloroethene	< 0.82	0.82		ug/m3	1	2/27/2014 4:24:00 PM
Vinyl acetate	< 0.54	0.54		ug/m3	1	2/27/2014 4:24:00 PM
Vinyl Bromide	< 0.67	0.67		ug/m3	1	2/27/2014 4:24:00 PM
Vinyl chloride	< 0.39	0.39		ug/m3	1	2/27/2014 4:24:00 PM

Qualifiers:

**	Reporting Limit	.	Results reported are not blank corrected
B	Analyte detected in the associated Method Blank	E	Value above quantitation range
H	Holding times for preparation or analysis exceeded	J	Analyte detected at or below quantitation limits
JN	Non-routine analyte. Quantitation estimated.	ND	Not Detected at the Reporting Limit
S	Spike Recovery outside accepted recovery limits		

Centek Laboratories, LLC

Date: *10-Mar-14*

CLIENT:	Conrad Geoscience Corp. / PVE Sheffler	**Client Sample ID:**	SV-2
Lab Order:	C1402065	**Tag Number:**	558,1172
Project:	McGuinness Blvd	**Collection Date:**	2/25/2014
Lab ID:	C1402065-002A	**Matrix:**	AIR

Analyses	Result	**Limit	Qual	Units	DF	Date Analyzed
1UG/M3 BY METHOD TO15		**TO-15**				Analyst: **RJP**
1,1,1-Trichloroethane	< 0.83	0.83		ug/m3	1	2/27/2014 5:03:00 PM
1,1,2,2-Tetrachloroethane	< 1.0	1.0		ug/m3	1	2/27/2014 5:03:00 PM
1,1,2-Trichloroethane	< 0.83	0.83		ug/m3	1	2/27/2014 5:03:00 PM
1,1-Dichloroethane	< 0.62	0.62		ug/m3	1	2/27/2014 5:03:00 PM
1,1-Dichloroethene	< 0.60	0.60		ug/m3	1	2/27/2014 5:03:00 PM
1,2,4-Trichlorobenzene	< 1.1	1.1		ug/m3	1	2/27/2014 5:03:00 PM
1,2,4-Trimethylbenzene	5.4	0.75		ug/m3	1	2/27/2014 5:03:00 PM
1,2-Dibromoethane	< 1.2	1.2		ug/m3	1	2/27/2014 5:03:00 PM
1,2-Dichlorobenzene	< 0.92	0.92		ug/m3	1	2/27/2014 5:03:00 PM
1,2-Dichloroethane	< 0.62	0.62		ug/m3	1	2/27/2014 5:03:00 PM
1,2-Dichloropropane	< 0.70	0.70		ug/m3	1	2/27/2014 5:03:00 PM
1,3,5-Trimethylbenzene	1.9	0.75		ug/m3	1	2/27/2014 5:03:00 PM
1,3-butadiene	< 0.34	0.34		ug/m3	1	2/27/2014 5:03:00 PM
1,3-Dichlorobenzene	< 0.92	0.92		ug/m3	1	2/27/2014 5:03:00 PM
1,4-Dichlorobenzene	< 0.92	0.92		ug/m3	1	2/27/2014 5:03:00 PM
1,4-Dioxane	< 1.1	1.1		ug/m3	1	2/27/2014 5:03:00 PM
2,2,4-trimethylpentane	690	570		ug/m3	810	3/5/2014 1:14:00 AM
4-ethyltoluene	3.2	0.75		ug/m3	1	2/27/2014 5:03:00 PM
Acetone	310	580	J	ug/m3	810	3/5/2014 1:14:00 AM
Allyl chloride	< 0.48	0.48		ug/m3	1	2/27/2014 5:03:00 PM
Benzene	3200	390		ug/m3	810	3/5/2014 1:14:00 AM
Benzyl chloride	< 0.88	0.88		ug/m3	1	2/27/2014 5:03:00 PM
Bromodichloromethane	< 1.0	1.0		ug/m3	1	2/27/2014 5:03:00 PM
Bromoform	< 1.6	1.6		ug/m3	1	2/27/2014 5:03:00 PM
Bromomethane	< 0.59	0.59		ug/m3	1	2/27/2014 5:03:00 PM
Carbon disulfide	7.0	4.7		ug/m3	10	2/27/2014 9:58:00 PM
Carbon tetrachloride	< 0.96	0.96		ug/m3	1	2/27/2014 5:03:00 PM
Chlorobenzene	< 0.70	0.70		ug/m3	1	2/27/2014 5:03:00 PM
Chloroethane	< 0.40	0.40		ug/m3	1	2/27/2014 5:03:00 PM
Chloroform	< 0.74	0.74		ug/m3	1	2/27/2014 5:03:00 PM
Chloromethane	< 0.31	0.31		ug/m3	1	2/27/2014 5:03:00 PM
cis-1,2-Dichloroethene	< 0.60	0.60		ug/m3	1	2/27/2014 5:03:00 PM
cis-1,3-Dichloropropene	< 0.69	0.69		ug/m3	1	2/27/2014 5:03:00 PM
Cyclohexane	9100	870		ug/m3	1640	3/5/2014 1:52:00 AM
Dibromochloromethane	< 1.3	1.3		ug/m3	1	2/27/2014 5:03:00 PM
Ethyl acetate	< 0.92	0.92		ug/m3	1	2/27/2014 5:03:00 PM
Ethylbenzene	< 0.66	0.66		ug/m3	1	2/27/2014 5:03:00 PM
Freon 11	1.5	0.86		ug/m3	1	2/27/2014 5:03:00 PM
Freon 113	< 1.2	1.2		ug/m3	1	2/27/2014 5:03:00 PM
Freon 114	< 1.1	1.1		ug/m3	1	2/27/2014 5:03:00 PM

Qualifiers:

**	Reporting Limit	.	Results reported are not blank corrected
B	Analyte detected in the associated Method Blank	E	Value above quantitation range
H	Holding times for preparation or analysis exceeded	J	Analyte detected at or below quantitation limits
JN	Non-routine analyte. Quantitation estimated.	ND	Not Detected at the Reporting Limit
S	Spike Recovery outside accepted recovery limits		

Centek Laboratories, LLC

Date: *10-Mar-14*

CLIENT:	Conrad Geoscience Corp. / PVE Sheffler	**Client Sample ID:**	SV-2
Lab Order:	C1402065	**Tag Number:**	558,1172
Project:	McGuinness Blvd	**Collection Date:**	2/25/2014
Lab ID:	C1402065-002A	**Matrix:**	AIR

Analyses	Result	**Limit	Qual	Units	DF	Date Analyzed
1UG/M3 BY METHOD TO15		**TO-15**				Analyst: **RJP**
Freon 12	2.7	0.75		ug/m3	1	2/27/2014 5:03:00 PM
Heptane	2400	500		ug/m3	810	3/5/2014 1:14:00 AM
Hexachloro-1,3-butadiene	< 1.6	1.6		ug/m3	1	2/27/2014 5:03:00 PM
Hexane	3900	430		ug/m3	810	3/5/2014 1:14:00 AM
Isopropyl alcohol	< 0.37	0.37		ug/m3	1	2/27/2014 5:03:00 PM
m&p-Xylene	< 1.3	1.3		ug/m3	1	2/27/2014 5:03:00 PM
Methyl Butyl Ketone	< 1.2	1.2		ug/m3	1	2/27/2014 5:03:00 PM
Methyl Ethyl Ketone	< 0.90	0.90		ug/m3	1	2/27/2014 5:03:00 PM
Methyl Isobutyl Ketone	< 1.2	1.2		ug/m3	1	2/27/2014 5:03:00 PM
Methyl tert-butyl ether	< 0.55	0.55		ug/m3	1	2/27/2014 5:03:00 PM
Methylene chloride	6.0	0.53		ug/m3	1	2/27/2014 5:03:00 PM
o-Xylene	< 0.66	0.66		ug/m3	1	2/27/2014 5:03:00 PM
Propylene	< 0.26	0.26		ug/m3	1	2/27/2014 5:03:00 PM
Styrene	< 0.65	0.65		ug/m3	1	2/27/2014 5:03:00 PM
Tetrachloroethylene	< 1.0	1.0		ug/m3	1	2/27/2014 5:03:00 PM
Tetrahydrofuran	< 0.45	0.45		ug/m3	1	2/27/2014 5:03:00 PM
Toluene	90	5.7		ug/m3	10	2/27/2014 9:58:00 PM
trans-1,2-Dichloroethene	< 0.60	0.60		ug/m3	1	2/27/2014 5:03:00 PM
trans-1,3-Dichloropropene	< 0.69	0.69		ug/m3	1	2/27/2014 5:03:00 PM
Trichloroethene	< 0.82	0.82		ug/m3	1	2/27/2014 5:03:00 PM
Vinyl acetate	< 0.54	0.54		ug/m3	1	2/27/2014 5:03:00 PM
Vinyl Bromide	< 0.67	0.67		ug/m3	1	2/27/2014 5:03:00 PM
Vinyl chloride	< 0.39	0.39		ug/m3	1	2/27/2014 5:03:00 PM

NOTES:

*S=Surrogate did not meet criteria due to the high concentration of target and non-target compounds.

Qualifiers:	**	Reporting Limit	.	Results reported are not blank corrected
	B	Analyte detected in the associated Method Blank	E	Value above quantitation range
	H	Holding times for preparation or analysis exceeded	J	Analyte detected at or below quantitation limits
	JN	Non-routine analyte. Quantitation estimated.	ND	Not Detected at the Reporting Limit
	S	Spike Recovery outside accepted recovery limits		

Centek Laboratories, LLC

Date: *10-Mar-14*

CLIENT:	Conrad Geoscience Corp. / PVE Sheffler	**Client Sample ID:**	SV-3
Lab Order:	C1402065	**Tag Number:**	189,338
Project:	McGuinness Blvd	**Collection Date:**	2/25/2014
Lab ID:	C1402065-003A	**Matrix:**	AIR

Analyses	Result	**Limit	Qual	Units	DF	Date Analyzed
1UG/M3 BY METHOD TO15		**TO-15**				Analyst: **RJP**
1,1,1-Trichloroethane	< 0.83	0.83		ug/m3	1	2/27/2014 5:42:00 PM
1,1,2,2-Tetrachloroethane	< 1.0	1.0		ug/m3	1	2/27/2014 5:42:00 PM
1,1,2-Trichloroethane	< 0.83	0.83		ug/m3	1	2/27/2014 5:42:00 PM
1,1-Dichloroethane	< 0.62	0.62		ug/m3	1	2/27/2014 5:42:00 PM
1,1-Dichloroethene	< 0.60	0.60		ug/m3	1	2/27/2014 5:42:00 PM
1,2,4-Trichlorobenzene	< 1.1	1.1		ug/m3	1	2/27/2014 5:42:00 PM
1,2,4-Trimethylbenzene	5.8	0.75		ug/m3	1	2/27/2014 5:42:00 PM
1,2-Dibromoethane	< 1.2	1.2		ug/m3	1	2/27/2014 5:42:00 PM
1,2-Dichlorobenzene	< 0.92	0.92		ug/m3	1	2/27/2014 5:42:00 PM
1,2-Dichloroethane	< 0.62	0.62		ug/m3	1	2/27/2014 5:42:00 PM
1,2-Dichloropropane	< 0.70	0.70		ug/m3	1	2/27/2014 5:42:00 PM
1,3,5-Trimethylbenzene	1.7	0.75		ug/m3	1	2/27/2014 5:42:00 PM
1,3-butadiene	< 0.34	0.34		ug/m3	1	2/27/2014 5:42:00 PM
1,3-Dichlorobenzene	< 0.92	0.92		ug/m3	1	2/27/2014 5:42:00 PM
1,4-Dichlorobenzene	< 0.92	0.92		ug/m3	1	2/27/2014 5:42:00 PM
1,4-Dioxane	1.0	1.1	J	ug/m3	1	2/27/2014 5:42:00 PM
2,2,4-trimethylpentane	3.6	0.71		ug/m3	1	2/27/2014 5:42:00 PM
4-ethyltoluene	1.6	0.75		ug/m3	1	2/27/2014 5:42:00 PM
Acetone	790	200		ug/m3	270	3/5/2014 2:28:00 AM
Allyl chloride	< 0.48	0.48		ug/m3	1	2/27/2014 5:42:00 PM
Benzene	4.8	0.49		ug/m3	1	2/27/2014 5:42:00 PM
Benzyl chloride	< 0.88	0.88		ug/m3	1	2/27/2014 5:42:00 PM
Bromodichloromethane	1.4	1.0		ug/m3	1	2/27/2014 5:42:00 PM
Bromoform	< 1.6	1.6		ug/m3	1	2/27/2014 5:42:00 PM
Bromomethane	< 0.59	0.59		ug/m3	1	2/27/2014 5:42:00 PM
Carbon disulfide	11	4.7		ug/m3	10	2/27/2014 10:35:00 PM
Carbon tetrachloride	< 0.96	0.96		ug/m3	1	2/27/2014 5:42:00 PM
Chlorobenzene	< 0.70	0.70		ug/m3	1	2/27/2014 5:42:00 PM
Chloroethane	< 0.40	0.40		ug/m3	1	2/27/2014 5:42:00 PM
Chloroform	27	7.4		ug/m3	10	2/27/2014 10:35:00 PM
Chloromethane	< 0.31	0.31		ug/m3	1	2/27/2014 5:42:00 PM
cis-1,2-Dichloroethene	< 0.60	0.60		ug/m3	1	2/27/2014 5:42:00 PM
cis-1,3-Dichloropropene	< 0.69	0.69		ug/m3	1	2/27/2014 5:42:00 PM
Cyclohexane	66	5.2		ug/m3	10	2/27/2014 10:35:00 PM
Dibromochloromethane	< 1.3	1.3		ug/m3	1	2/27/2014 5:42:00 PM
Ethyl acetate	< 0.92	0.92		ug/m3	1	2/27/2014 5:42:00 PM
Ethylbenzene	18	6.6		ug/m3	10	2/27/2014 10:35:00 PM
Freon 11	17	8.6		ug/m3	10	2/27/2014 10:35:00 PM
Freon 113	< 1.2	1.2		ug/m3	1	2/27/2014 5:42:00 PM
Freon 114	< 1.1	1.1		ug/m3	1	2/27/2014 5:42:00 PM

Qualifiers:

**	Reporting Limit	.	Results reported are not blank corrected
B	Analyte detected in the associated Method Blank	E	Value above quantitation range
H	Holding times for preparation or analysis exceeded	J	Analyte detected at or below quantitation limits
JN	Non-routine analyte. Quantitation estimated.	ND	Not Detected at the Reporting Limit
S	Spike Recovery outside accepted recovery limits		

Centek Laboratories, LLC

Date: *10-Mar-14*

CLIENT:	Conrad Geoscience Corp. / PVE Sheffler	**Client Sample ID:**	SV-3
Lab Order:	C1402065	**Tag Number:**	189,338
Project:	McGuinness Blvd	**Collection Date:**	2/25/2014
Lab ID:	C1402065-003A	**Matrix:**	AIR

Analyses	Result	**Limit	Qual	Units	DF	Date Analyzed
1UG/M3 BY METHOD TO15		**TO-15**				Analyst: **RJP**
Freon 12	2.7	0.75		ug/m3	1	2/27/2014 5:42:00 PM
Heptane	9.6	6.2		ug/m3	10	2/27/2014 10:35:00 PM
Hexachloro-1,3-butadiene	< 1.6	1.6		ug/m3	1	2/27/2014 5:42:00 PM
Hexane	41	5.4		ug/m3	10	2/27/2014 10:35:00 PM
Isopropyl alcohol	< 0.37	0.37		ug/m3	1	2/27/2014 5:42:00 PM
m&p-Xylene	35	13		ug/m3	10	2/27/2014 10:35:00 PM
Methyl Butyl Ketone	< 1.2	1.2		ug/m3	1	2/27/2014 5:42:00 PM
Methyl Ethyl Ketone	22	9.0		ug/m3	10	2/27/2014 10:35:00 PM
Methyl Isobutyl Ketone	< 1.2	1.2		ug/m3	1	2/27/2014 5:42:00 PM
Methyl tert-butyl ether	< 0.55	0.55		ug/m3	1	2/27/2014 5:42:00 PM
Methylene chloride	1.1	0.53		ug/m3	1	2/27/2014 5:42:00 PM
o-Xylene	6.4	0.66		ug/m3	1	2/27/2014 5:42:00 PM
Propylene	< 0.26	0.26		ug/m3	1	2/27/2014 5:42:00 PM
Styrene	< 0.65	0.65		ug/m3	1	2/27/2014 5:42:00 PM
Tetrachloroethylene	2.2	1.0		ug/m3	1	2/27/2014 5:42:00 PM
Tetrahydrofuran	< 0.45	0.45		ug/m3	1	2/27/2014 5:42:00 PM
Toluene	69	5.7		ug/m3	10	2/27/2014 10:35:00 PM
trans-1,2-Dichloroethene	< 0.60	0.60		ug/m3	1	2/27/2014 5:42:00 PM
trans-1,3-Dichloropropene	< 0.69	0.69		ug/m3	1	2/27/2014 5:42:00 PM
Trichloroethene	0.71	0.82	J	ug/m3	1	2/27/2014 5:42:00 PM
Vinyl acetate	< 0.54	0.54		ug/m3	1	2/27/2014 5:42:00 PM
Vinyl Bromide	< 0.67	0.67		ug/m3	1	2/27/2014 5:42:00 PM
Vinyl chloride	< 0.39	0.39		ug/m3	1	2/27/2014 5:42:00 PM

Qualifiers:

**	Reporting Limit	.	Results reported are not blank corrected
B	Analyte detected in the associated Method Blank	E	Value above quantitation range
H	Holding times for preparation or analysis exceeded	J	Analyte detected at or below quantitation limits
JN	Non-routine analyte. Quantitation estimated.	ND	Not Detected at the Reporting Limit
S	Spike Recovery outside accepted recovery limits		

PARADIGM
ENVIRONMENTAL SERVICES, INC.

Analytical Report For

PVE Sheffler

For Lab Project ID

140763

Referencing

211-235 McGuiness Blvd, 500008

Prepared

Friday, March 14, 2014

Any noncompliant QC parameters or other notes impacting data interpretation are flagged or documented on the final report or are noted below.

Certifies that this report has been approved by the Technical Director or Designee

179 Lake Avenue • Rochester, NY 14608 • (585) 647-2530 • Fax (585) 647-3311 • ELAP ID# 10958

This report is part of a multipage document and should only be evaluated in its entirety. The Chain of Custody provides additional sample information, including compliance with the sample condition requirements upon receipt.

PARADIGM ENVIRONMENTAL SERVICES, INC.

Lab Project ID: 140763

Client: **PVE Sheffler**

Project Reference: 211-235 McGuiness Blvd, 500008

Sample Identifier: GB-1 14-16'
Lab Sample ID: 140763-01 **Date Sampled:** 3/3/2014
Matrix: Soil **Date Received:** 3/5/2014

Hexavalent Chromium

Analyte	Result	Units	Qualifier	Date Analyzed
Chrome, Hexavalent	<1.2	mg/Kg		3/7/2014

Method Reference(s): EPA 7196
Subcontractor ELAP ID: 10478

Total Cyanide

Analyte	Result	Units	Qualifier	Date Analyzed
Cyanide, Total	<0.57	mg/Kg		3/9/2014

Method Reference(s): EPA 9014
Subcontractor ELAP ID: 10478

Part 375 Metals (ICP)

Analyte	Result	Units	Qualifier	Date Analyzed	
Arsenic	**3.35**	mg/Kg		3/10/2014	14:47
Barium	**20.8**	mg/Kg		3/10/2014	14:47
Beryllium	< 0.581	mg/Kg		3/10/2014	14:47
Cadmium	< 0.581	mg/Kg		3/10/2014	14:47
Chromium	**26.3**	mg/Kg		3/10/2014	14:47
Copper	**10.2**	mg/Kg		3/10/2014	14:47
Lead	**3.14**	mg/Kg		3/7/2014	17:50
Manganese	**167**	mg/Kg		3/10/2014	14:47
Nickel	**20.6**	mg/Kg		3/10/2014	14:47
Selenium	< 1.16	mg/Kg		3/10/2014	14:47
Silver	< 1.16	mg/Kg		3/10/2014	14:47
Zinc	**30.4**	mg/Kg		3/10/2014	14:47

Method Reference(s): EPA 6010C
EPA 3050
Data File: 031014a

This report is part of a multipage document and should only be evaluated in its entirety. The Chain of Custody provides additional sample information, including compliance with the sample condition requirements upon receipt.

PARADIGM ENVIRONMENTAL SERVICES, INC.

Lab Project ID: 140763

Client: **PVE Sheffler**

Project Reference: 211-235 McGuiness Blvd, 500008

Sample Identifier: GB-1 14-16'
Lab Sample ID: 140763-01 **Date Sampled:** 3/3/2014
Matrix: Soil **Date Received:** 3/5/2014

Mercury

Analyte	Result	Units	Qualifier	Date Analyzed	
Mercury	< 0.0190	mg/Kg		3/10/2014	14:01

Method Reference(s): EPA 7471B
Data File: Hg140310A

PCBs

Analyte	Result	Units	Qualifier	Date Analyzed	
PCB-1016	< 0.0327	mg/Kg		3/6/2014	16:34
PCB-1221	< 0.0327	mg/Kg		3/6/2014	16:34
PCB-1232	< 0.0327	mg/Kg		3/6/2014	16:34
PCB-1242	< 0.0327	mg/Kg		3/6/2014	16:34
PCB-1248	< 0.0327	mg/Kg		3/6/2014	16:34
PCB-1254	< 0.0327	mg/Kg		3/6/2014	16:34
PCB-1260	< 0.0327	mg/Kg		3/6/2014	16:34
PCB-1262	< 0.0327	mg/Kg		3/6/2014	16:34
PCB-1268	< 0.0327	mg/Kg		3/6/2014	16:34

Method Reference(s): EPA 8082A
EPA 3550C

Semi-Volatile Organics (Acid/Base Neutrals)

Analyte	Result	Units	Qualifier	Date Analyzed	
1,1-Biphenyl	< 325	ug/Kg		3/6/2014	18:19
1,2,4,5-Tetrachlorobenzene	< 325	ug/Kg		3/6/2014	18:19
1,2,4-Trichlorobenzene	< 325	ug/Kg		3/6/2014	18:19
1,2-Dichlorobenzene	< 325	ug/Kg		3/6/2014	18:19
1,3-Dichlorobenzene	< 325	ug/Kg		3/6/2014	18:19
1,4-Dichlorobenzene	< 325	ug/Kg		3/6/2014	18:19
2,3,4,6-Tetrachlorophenol	< 325	ug/Kg		3/6/2014	18:19

This report is part of a multipage document and should only be evaluated in its entirety. The Chain of Custody provides additional sample information, including compliance with the sample condition requirements upon receipt.

PARADIGM ENVIRONMENTAL SERVICES, INC.

Lab Project ID: 140763

Client: **PVE Sheffler**

Project Reference: 211-235 McGuiness Blvd, 500008

Sample Identifier: GB-1 14-16'
Lab Sample ID: 140763-01 **Date Sampled:** 3/3/2014
Matrix: Soil **Date Received:** 3/5/2014

2,4,5-Trichlorophenol	< 651	ug/Kg	3/6/2014	18:19
2,4,6-Trichlorophenol	< 325	ug/Kg	3/6/2014	18:19
2,4-Dichlorophenol	< 325	ug/Kg	3/6/2014	18:19
2,4-Dimethylphenol	< 325	ug/Kg	3/6/2014	18:19
2,4-Dinitrophenol	< 651	ug/Kg	3/6/2014	18:19
2,4-Dinitrotoluene	< 325	ug/Kg	3/6/2014	18:19
2,6-Dinitrotoluene	< 325	ug/Kg	3/6/2014	18:19
2-Chloronaphthalene	< 325	ug/Kg	3/6/2014	18:19
2-Chlorophenol	< 325	ug/Kg	3/6/2014	18:19
2-Methylnapthalene	< 325	ug/Kg	3/6/2014	18:19
2-Methylphenol	< 325	ug/Kg	3/6/2014	18:19
2-Nitroaniline	< 651	ug/Kg	3/6/2014	18:19
2-Nitrophenol	< 325	ug/Kg	3/6/2014	18:19
3&4-Methylphenol	< 325	ug/Kg	3/6/2014	18:19
3,3'-Dichlorobenzidine	< 325	ug/Kg	3/6/2014	18:19
3-Nitroaniline	< 651	ug/Kg	3/6/2014	18:19
4,6-Dinitro-2-methylphenol	< 651	ug/Kg	3/6/2014	18:19
4-Bromophenyl phenyl ether	< 325	ug/Kg	3/6/2014	18:19
4-Chloro-3-methylphenol	< 325	ug/Kg	3/6/2014	18:19
4-Chloroaniline	< 325	ug/Kg	3/6/2014	18:19
4-Chlorophenyl phenyl ether	< 325	ug/Kg	3/6/2014	18:19
4-Nitroaniline	< 651	ug/Kg	3/6/2014	18:19
4-Nitrophenol	< 651	ug/Kg	3/6/2014	18:19
Acenaphthene	< 325	ug/Kg	3/6/2014	18:19
Acenaphthylene	< 325	ug/Kg	3/6/2014	18:19
Acetophenone	< 325	ug/Kg	3/6/2014	18:19
Anthracene	< 325	ug/Kg	3/6/2014	18:19
Atrazine	< 325	ug/Kg	3/6/2014	18:19

This report is part of a multipage document and should only be evaluated in its entirety. The Chain of Custody provides additional sample information, including compliance with the sample condition requirements upon receipt.

PARADIGM ENVIRONMENTAL SERVICES, INC.

Lab Project ID: 140763

Client: **PVE Sheffler**

Project Reference: 211-235 McGuiness Blvd, 500008

Sample Identifier: GB-1 14-16'
Lab Sample ID: 140763-01 **Date Sampled:** 3/3/2014
Matrix: Soil **Date Received:** 3/5/2014

Benzaldehyde	< 325	ug/Kg	3/6/2014	18:19
Benzo (a) anthracene	< 325	ug/Kg	3/6/2014	18:19
Benzo (a) pyrene	< 325	ug/Kg	3/6/2014	18:19
Benzo (b) fluoranthene	< 325	ug/Kg	3/6/2014	18:19
Benzo (g,h,i) perylene	< 325	ug/Kg	3/6/2014	18:19
Benzo (k) fluoranthene	< 325	ug/Kg	3/6/2014	18:19
Bis (2-chloroethoxy) methane	< 325	ug/Kg	3/6/2014	18:19
Bis (2-chloroethyl) ether	< 325	ug/Kg	3/6/2014	18:19
Bis (2-chloroisopropyl) ether	< 325	ug/Kg	3/6/2014	18:19
Bis (2-ethylhexyl) phthalate	< 325	ug/Kg	3/6/2014	18:19
Butylbenzylphthalate	< 325	ug/Kg	3/6/2014	18:19
Caprolactam	< 325	ug/Kg	3/6/2014	18:19
Carbazole	< 325	ug/Kg	3/6/2014	18:19
Chrysene	< 325	ug/Kg	3/6/2014	18:19
Dibenz (a,h) anthracene	< 325	ug/Kg	3/6/2014	18:19
Dibenzofuran	< 325	ug/Kg	3/6/2014	18:19
Diethyl phthalate	< 325	ug/Kg	3/6/2014	18:19
Dimethyl phthalate	< 651	ug/Kg	3/6/2014	18:19
Di-n-butyl phthalate	< 325	ug/Kg	3/6/2014	18:19
Di-n-octylphthalate	< 325	ug/Kg	3/6/2014	18:19
Fluoranthene	< 325	ug/Kg	3/6/2014	18:19
Fluorene	< 325	ug/Kg	3/6/2014	18:19
Hexachlorobenzene	< 325	ug/Kg	3/6/2014	18:19
Hexachlorobutadiene	< 325	ug/Kg	3/6/2014	18:19
Hexachlorocyclopentadiene	< 325	ug/Kg	3/6/2014	18:19
Hexachloroethane	< 325	ug/Kg	3/6/2014	18:19
Indeno (1,2,3-cd) pyrene	< 325	ug/Kg	3/6/2014	18:19
Isophorone	< 325	ug/Kg	3/6/2014	18:19

This report is part of a multipage document and should only be evaluated in its entirety. The Chain of Custody provides additional sample information, including compliance with the sample condition requirements upon receipt.

PARADIGM ENVIRONMENTAL SERVICES, INC.

Lab Project ID: 140763

Client: **PVE Sheffler**

Project Reference: 211-235 McGuiness Blvd, 500008

Sample Identifier: GB-1 14-16'
Lab Sample ID: 140763-01 **Date Sampled:** 3/3/2014
Matrix: Soil **Date Received:** 3/5/2014

Naphthalene	< 325	ug/Kg		3/6/2014	18:19
Nitrobenzene	< 325	ug/Kg		3/6/2014	18:19
N-Nitroso-di-n-propylamine	< 325	ug/Kg		3/6/2014	18:19
N-Nitrosodiphenylamine	< 325	ug/Kg		3/6/2014	18:19
Pentachlorophenol	< 651	ug/Kg		3/6/2014	18:19
Phenanthrene	< 325	ug/Kg		3/6/2014	18:19
Phenol	< 325	ug/Kg		3/6/2014	18:19
Pyrene	< 325	ug/Kg		3/6/2014	18:19

Method Reference(s): EPA 8270D
EPA 3550C
Data File: S75316.D

Herbicides

Analyte	Result	Units	Qualifier	Date Analyzed
2,4,5-TP (Silvex)	<5.9	ug/Kg		3/12/2014

Method Reference(s): EPA 8151
Subcontractor ELAP ID: 10478

Chlorinated Pesticides

Analyte	Result	Units	Qualifier	Date Analyzed
4,4-DDD	<3.9	ug/Kg		3/12/2014
4,4-DDE	<3.9	ug/Kg		3/12/2014
4,4-DDT	<3.9	ug/Kg		3/12/2014
Aldrin	<2.0	ug/Kg		3/12/2014
alpha-BHC	<2.0	ug/Kg		3/12/2014
beta-BHC	<2.0	ug/Kg		3/12/2014
cis-Chlordane	<2.0	ug/Kg		3/12/2014
delta-BHC	<2.0	ug/Kg		3/12/2014
Dieldrin	<3.9	ug/Kg		3/12/2014
Endosulfan I	<2.0	ug/Kg		3/12/2014

This report is part of a multipage document and should only be evaluated in its entirety. The Chain of Custody provides additional sample information, including compliance with the sample condition requirements upon receipt.

PARADIGM ENVIRONMENTAL SERVICES, INC.

Lab Project ID: 140763

Client: **PVE Sheffler**

Project Reference: 211-235 McGuiness Blvd, 500008

Sample Identifier: GB-1 14-16'
Lab Sample ID: 140763-01 **Date Sampled:** 3/3/2014
Matrix: Soil **Date Received:** 3/5/2014

Endosulfan II	<3.9	ug/Kg		3/12/2014
Endosulfan Sulfate	<3.9	ug/Kg		3/12/2014
Endrin	<3.9	ug/Kg		3/12/2014
Endrin Aldehyde	<3.9	ug/Kg		3/12/2014
Endrin Ketone	<3.9	ug/Kg		3/12/2014
gamma-BHC (Lindane)	<2.0	ug/Kg		3/12/2014
Heptachlor	<2.0	ug/Kg		3/12/2014
Heptachlor Epoxide	<2.0	ug/Kg		3/12/2014
Methoxychlor	<20	ug/Kg		3/12/2014
Toxaphene	<200	ug/Kg		3/12/2014
trans-Chlordane	<2.0	ug/Kg		3/12/2014

Method Reference(s): EPA 8081
EPA 3510C
Subcontractor ELAP ID: 10478

Volatile Organics

Analyte	Result	Units	Qualifier	Date Analyzed	
1,1,1-Trichloroethane	< 6.82	ug/Kg		3/5/2014	15:14
1,1,2,2-Tetrachloroethane	< 6.82	ug/Kg		3/5/2014	15:14
1,1,2-Trichloroethane	< 6.82	ug/Kg		3/5/2014	15:14
1,1-Dichloroethane	< 6.82	ug/Kg		3/5/2014	15:14
1,1-Dichloroethene	< 6.82	ug/Kg		3/5/2014	15:14
1,2,3-Trichlorobenzene	< 17.0	ug/Kg		3/5/2014	15:14
1,2,4-Trichlorobenzene	< 17.0	ug/Kg		3/5/2014	15:14
1,2,4-Trimethylbenzene	< 6.82	ug/Kg		3/5/2014	15:14
1,2-Dibromo-3-Chloropropane	< 34.1	ug/Kg		3/5/2014	15:14
1,2-Dibromoethane	< 6.82	ug/Kg		3/5/2014	15:14
1,2-Dichlorobenzene	< 6.82	ug/Kg		3/5/2014	15:14
1,2-Dichloroethane	< 6.82	ug/Kg		3/5/2014	15:14

This report is part of a multipage document and should only be evaluated in its entirety. The Chain of Custody provides additional sample information, including compliance with the sample condition requirements upon receipt.

PARADIGM ENVIRONMENTAL SERVICES, INC.

Lab Project ID: 140763

Client: **PVE Sheffler**

Project Reference: 211-235 McGuiness Blvd, 500008

Sample Identifier: GB-1 14-16'
Lab Sample ID: 140763-01 **Date Sampled:** 3/3/2014
Matrix: Soil **Date Received:** 3/5/2014

1,2-Dichloropropane	< 6.82	ug/Kg	3/5/2014	15:14
1,3,5-Trimethylbenzene	< 6.82	ug/Kg	3/5/2014	15:14
1,3-Dichlorobenzene	< 6.82	ug/Kg	3/5/2014	15:14
1,4-Dichlorobenzene	< 6.82	ug/Kg	3/5/2014	15:14
1,4-dioxane	< 68.2	ug/Kg	3/5/2014	15:14
2-Butanone	< 34.1	ug/Kg	3/5/2014	15:14
2-Hexanone	< 17.0	ug/Kg	3/5/2014	15:14
4-Methyl-2-pentanone	< 17.0	ug/Kg	3/5/2014	15:14
Acetone	**139**	ug/Kg	3/5/2014	15:14
Benzene	< 6.82	ug/Kg	3/5/2014	15:14
Bromochloromethane	< 17.0	ug/Kg	3/5/2014	15:14
Bromodichloromethane	< 6.82	ug/Kg	3/5/2014	15:14
Bromoform	< 17.0	ug/Kg	3/5/2014	15:14
Bromomethane	< 6.82	ug/Kg	3/5/2014	15:14
Carbon disulfide	< 6.82	ug/Kg	3/5/2014	15:14
Carbon Tetrachloride	< 6.82	ug/Kg	3/5/2014	15:14
Chlorobenzene	< 6.82	ug/Kg	3/5/2014	15:14
Chloroethane	< 6.82	ug/Kg	3/5/2014	15:14
Chloroform	< 6.82	ug/Kg	3/5/2014	15:14
Chloromethane	< 6.82	ug/Kg	3/5/2014	15:14
cis-1,2-Dichloroethene	< 6.82	ug/Kg	3/5/2014	15:14
cis-1,3-Dichloropropene	< 6.82	ug/Kg	3/5/2014	15:14
Cyclohexane	< 34.1	ug/Kg	3/5/2014	15:14
Dibromochloromethane	< 6.82	ug/Kg	3/5/2014	15:14
Dichlorodifluoromethane	< 6.82	ug/Kg	3/5/2014	15:14
Ethylbenzene	< 6.82	ug/Kg	3/5/2014	15:14
Freon 113	< 6.82	ug/Kg	3/5/2014	15:14
Isopropylbenzene	< 6.82	ug/Kg	3/5/2014	15:14

This report is part of a multipage document and should only be evaluated in its entirety. The Chain of Custody provides additional sample information, including compliance with the sample condition requirements upon receipt.

PARADIGM ENVIRONMENTAL SERVICES, INC.

Lab Project ID: 140763

Client: **PVE Sheffler**

Project Reference: 211-235 McGuiness Blvd, 500008

Sample Identifier: GB-1 14-16'
Lab Sample ID: 140763-01 **Date Sampled:** 3/3/2014
Matrix: Soil **Date Received:** 3/5/2014

m,p-Xylene	< 6.82	ug/Kg	3/5/2014	15:14
Methyl acetate	< 6.82	ug/Kg	3/5/2014	15:14
Methyl tert-butyl Ether	< 6.82	ug/Kg	3/5/2014	15:14
Methylcyclohexane	< 6.82	ug/Kg	3/5/2014	15:14
Methylene chloride	< 17.0	ug/Kg	3/5/2014	15:14
Naphthalene	< 17.0	ug/Kg	3/5/2014	15:14
n-Butylbenzene	< 6.82	ug/Kg	3/5/2014	15:14
n-Propylbenzene	< 6.82	ug/Kg	3/5/2014	15:14
o-Xylene	< 6.82	ug/Kg	3/5/2014	15:14
p-Isopropyltoluene	< 6.82	ug/Kg	3/5/2014	15:14
sec-Butylbenzene	< 6.82	ug/Kg	3/5/2014	15:14
Styrene	< 17.0	ug/Kg	3/5/2014	15:14
tert-Butylbenzene	< 6.82	ug/Kg	3/5/2014	15:14
Tetrachloroethene	< 6.82	ug/Kg	3/5/2014	15:14
Toluene	< 6.82	ug/Kg	3/5/2014	15:14
trans-1,2-Dichloroethene	< 6.82	ug/Kg	3/5/2014	15:14
trans-1,3-Dichloropropene	< 6.82	ug/Kg	3/5/2014	15:14
Trichloroethene	< 6.82	ug/Kg	3/5/2014	15:14
Trichlorofluoromethane	< 6.82	ug/Kg	3/5/2014	15:14
Vinyl chloride	< 6.82	ug/Kg	3/5/2014	15:14

Method Reference(s): EPA 8260C
EPA 5035A
Data File: x11651.D

Any Volatiles soil results that are less than 200 ug/Kg, including Non Detects, may be biased low, per ELAP method 5035 guidance document from 11/15/2012.

This report is part of a multipage document and should only be evaluated in its entirety. The Chain of Custody provides additional sample information, including compliance with the sample condition requirements upon receipt.

PARADIGM ENVIRONMENTAL SERVICES, INC.

Lab Project ID: 140763

Client: **PVE Sheffler**

Project Reference: 211-235 McGuiness Blvd, 500008

Sample Identifier: GB-2 12-14'
Lab Sample ID: 140763-02 **Date Sampled:** 3/3/2014
Matrix: Soil **Date Received:** 3/5/2014

Hexavalent Chromium

Analyte	Result	Units	Qualifier	Date Analyzed
Chrome, Hexavalent	<1.2	mg/Kg		3/7/2014

Method Reference(s): EPA 7196
Subcontractor ELAP ID: 10478

Total Cyanide

Analyte	Result	Units	Qualifier	Date Analyzed
Cyanide, Total	<0.59	mg/Kg		3/9/2014

Method Reference(s): EPA 9014
Subcontractor ELAP ID: 10478

Part 375 Metals (ICP)

Analyte	Result	Units	Qualifier	Date Analyzed	
Arsenic	**3.17**	mg/Kg		3/10/2014	14:51
Barium	**27.6**	mg/Kg		3/10/2014	14:51
Beryllium	< 0.647	mg/Kg		3/10/2014	14:51
Cadmium	< 0.647	mg/Kg		3/10/2014	14:51
Chromium	**14.5**	mg/Kg		3/10/2014	14:51
Copper	**9.61**	mg/Kg		3/10/2014	14:51
Lead	**7.10**	mg/Kg		3/7/2014	17:54
Manganese	**171**	mg/Kg		3/10/2014	14:51
Nickel	**9.35**	mg/Kg		3/10/2014	14:51
Selenium	< 1.29	mg/Kg		3/10/2014	14:51
Silver	< 1.29	mg/Kg		3/10/2014	14:51
Zinc	**28.8**	mg/Kg		3/10/2014	14:51

Method Reference(s): EPA 6010C
EPA 3050
Data File: 031014a

This report is part of a multipage document and should only be evaluated in its entirety. The Chain of Custody provides additional sample information, including compliance with the sample condition requirements upon receipt.

PARADIGM ENVIRONMENTAL SERVICES, INC.

Lab Project ID: 140763

Client: **PVE Sheffler**

Project Reference: 211-235 McGuiness Blvd, 500008

Sample Identifier: GB-2 12-14'
Lab Sample ID: 140763-02 **Date Sampled:** 3/3/2014
Matrix: Soil **Date Received:** 3/5/2014

Mercury

Analyte	Result	Units	Qualifier	Date Analyzed	
Mercury	< 0.0197	mg/Kg		3/10/2014	14:04

Method Reference(s): EPA 7471B
Data File: Hg140310A

PCBs

Analyte	Result	Units	Qualifier	Date Analyzed	
PCB-1016	< 0.0349	mg/Kg		3/6/2014	17:43
PCB-1221	< 0.0349	mg/Kg		3/6/2014	17:43
PCB-1232	< 0.0349	mg/Kg		3/6/2014	17:43
PCB-1242	< 0.0349	mg/Kg		3/6/2014	17:43
PCB-1248	< 0.0349	mg/Kg		3/6/2014	17:43
PCB-1254	< 0.0349	mg/Kg		3/6/2014	17:43
PCB-1260	< 0.0349	mg/Kg		3/6/2014	17:43
PCB-1262	< 0.0349	mg/Kg		3/6/2014	17:43
PCB-1268	< 0.0349	mg/Kg		3/6/2014	17:43

Method Reference(s): EPA 8082A
EPA 3550C

Semi-Volatile Organics (Acid/Base Neutrals)

Analyte	Result	Units	Qualifier	Date Analyzed	
1,1-Biphenyl	< 334	ug/Kg		3/6/2014	18:51
1,2,4,5-Tetrachlorobenzene	< 334	ug/Kg		3/6/2014	18:51
1,2,4-Trichlorobenzene	< 334	ug/Kg		3/6/2014	18:51
1,2-Dichlorobenzene	< 334	ug/Kg		3/6/2014	18:51
1,3-Dichlorobenzene	< 334	ug/Kg		3/6/2014	18:51
1,4-Dichlorobenzene	< 334	ug/Kg		3/6/2014	18:51
2,3,4,6-Tetrachlorophenol	< 334	ug/Kg		3/6/2014	18:51

This report is part of a multipage document and should only be evaluated in its entirety. The Chain of Custody provides additional sample information, including compliance with the sample condition requirements upon receipt.

PARADIGM ENVIRONMENTAL SERVICES, INC.

Lab Project ID: 140763

Client: **PVE Sheffler**

Project Reference: 211-235 McGuiness Blvd, 500008

Sample Identifier: GB-2 12-14'
Lab Sample ID: 140763-02 **Date Sampled:** 3/3/2014
Matrix: Soil **Date Received:** 3/5/2014

2,4,5-Trichlorophenol	< 668	ug/Kg	3/6/2014	18:51
2,4,6-Trichlorophenol	< 334	ug/Kg	3/6/2014	18:51
2,4-Dichlorophenol	< 334	ug/Kg	3/6/2014	18:51
2,4-Dimethylphenol	< 334	ug/Kg	3/6/2014	18:51
2,4-Dinitrophenol	< 668	ug/Kg	3/6/2014	18:51
2,4-Dinitrotoluene	< 334	ug/Kg	3/6/2014	18:51
2,6-Dinitrotoluene	< 334	ug/Kg	3/6/2014	18:51
2-Chloronaphthalene	< 334	ug/Kg	3/6/2014	18:51
2-Chlorophenol	< 334	ug/Kg	3/6/2014	18:51
2-Methylnapthalene	< 334	ug/Kg	3/6/2014	18:51
2-Methylphenol	< 334	ug/Kg	3/6/2014	18:51
2-Nitroaniline	< 668	ug/Kg	3/6/2014	18:51
2-Nitrophenol	< 334	ug/Kg	3/6/2014	18:51
3&4-Methylphenol	< 334	ug/Kg	3/6/2014	18:51
3,3'-Dichlorobenzidine	< 334	ug/Kg	3/6/2014	18:51
3-Nitroaniline	< 668	ug/Kg	3/6/2014	18:51
4,6-Dinitro-2-methylphenol	< 668	ug/Kg	3/6/2014	18:51
4-Bromophenyl phenyl ether	< 334	ug/Kg	3/6/2014	18:51
4-Chloro-3-methylphenol	< 334	ug/Kg	3/6/2014	18:51
4-Chloroaniline	< 334	ug/Kg	3/6/2014	18:51
4-Chlorophenyl phenyl ether	< 334	ug/Kg	3/6/2014	18:51
4-Nitroaniline	< 668	ug/Kg	3/6/2014	18:51
4-Nitrophenol	< 668	ug/Kg	3/6/2014	18:51
Acenaphthene	< 334	ug/Kg	3/6/2014	18:51
Acenaphthylene	< 334	ug/Kg	3/6/2014	18:51
Acetophenone	< 334	ug/Kg	3/6/2014	18:51
Anthracene	< 334	ug/Kg	3/6/2014	18:51
Atrazine	< 334	ug/Kg	3/6/2014	18:51

This report is part of a multipage document and should only be evaluated in its entirety. The Chain of Custody provides additional sample information, including compliance with the sample condition requirements upon receipt.

PARADIGM ENVIRONMENTAL SERVICES, INC.

Lab Project ID: 140763

Client: **PVE Sheffler**

Project Reference: 211-235 McGuiness Blvd, 500008

Sample Identifier: GB-2 12-14'
Lab Sample ID: 140763-02 **Date Sampled:** 3/3/2014
Matrix: Soil **Date Received:** 3/5/2014

Benzaldehyde	< 334	ug/Kg	3/6/2014	18:51
Benzo (a) anthracene	< 334	ug/Kg	3/6/2014	18:51
Benzo (a) pyrene	< 334	ug/Kg	3/6/2014	18:51
Benzo (b) fluoranthene	< 334	ug/Kg	3/6/2014	18:51
Benzo (g,h,i) perylene	< 334	ug/Kg	3/6/2014	18:51
Benzo (k) fluoranthene	< 334	ug/Kg	3/6/2014	18:51
Bis (2-chloroethoxy) methane	< 334	ug/Kg	3/6/2014	18:51
Bis (2-chloroethyl) ether	< 334	ug/Kg	3/6/2014	18:51
Bis (2-chloroisopropyl) ether	< 334	ug/Kg	3/6/2014	18:51
Bis (2-ethylhexyl) phthalate	< 334	ug/Kg	3/6/2014	18:51
Butylbenzylphthalate	< 334	ug/Kg	3/6/2014	18:51
Caprolactam	< 334	ug/Kg	3/6/2014	18:51
Carbazole	< 334	ug/Kg	3/6/2014	18:51
Chrysene	< 334	ug/Kg	3/6/2014	18:51
Dibenz (a,h) anthracene	< 334	ug/Kg	3/6/2014	18:51
Dibenzofuran	< 334	ug/Kg	3/6/2014	18:51
Diethyl phthalate	< 334	ug/Kg	3/6/2014	18:51
Dimethyl phthalate	< 668	ug/Kg	3/6/2014	18:51
Di-n-butyl phthalate	< 334	ug/Kg	3/6/2014	18:51
Di-n-octylphthalate	< 334	ug/Kg	3/6/2014	18:51
Fluoranthene	< 334	ug/Kg	3/6/2014	18:51
Fluorene	< 334	ug/Kg	3/6/2014	18:51
Hexachlorobenzene	< 334	ug/Kg	3/6/2014	18:51
Hexachlorobutadiene	< 334	ug/Kg	3/6/2014	18:51
Hexachlorocyclopentadiene	< 334	ug/Kg	3/6/2014	18:51
Hexachloroethane	< 334	ug/Kg	3/6/2014	18:51
Indeno (1,2,3-cd) pyrene	< 334	ug/Kg	3/6/2014	18:51
Isophorone	< 334	ug/Kg	3/6/2014	18:51

This report is part of a multipage document and should only be evaluated in its entirety. The Chain of Custody provides additional sample information, including compliance with the sample condition requirements upon receipt.

PARADIGM ENVIRONMENTAL SERVICES, INC.

Lab Project ID: 140763

Client: **PVE Sheffler**

Project Reference: 211-235 McGuiness Blvd, 500008

Sample Identifier: GB-2 12-14'
Lab Sample ID: 140763-02 **Date Sampled:** 3/3/2014
Matrix: Soil **Date Received:** 3/5/2014

Naphthalene	< 334	ug/Kg		3/6/2014	18:51
Nitrobenzene	< 334	ug/Kg		3/6/2014	18:51
N-Nitroso-di-n-propylamine	< 334	ug/Kg		3/6/2014	18:51
N-Nitrosodiphenylamine	< 334	ug/Kg		3/6/2014	18:51
Pentachlorophenol	< 668	ug/Kg		3/6/2014	18:51
Phenanthrene	< 334	ug/Kg		3/6/2014	18:51
Phenol	< 334	ug/Kg		3/6/2014	18:51
Pyrene	< 334	ug/Kg		3/6/2014	18:51

Method Reference(s): EPA 8270D
EPA 3550C
Data File: S75317.D

Herbicides

Analyte	Result	Units	Qualifier	Date Analyzed
2,4,5-TP (Silvex)	<5.9	ug/Kg		3/12/2014

Method Reference(s): EPA 8151
Subcontractor ELAP ID: 10478

Chlorinated Pesticides

Analyte	Result	Units	Qualifier	Date Analyzed
4,4-DDD	<3.9	ug/Kg		3/12/2014
4,4-DDE	<3.9	ug/Kg		3/12/2014
4,4-DDT	<3.9	ug/Kg		3/12/2014
Aldrin	<2.0	ug/Kg		3/12/2014
alpha-BHC	<2.0	ug/Kg		3/12/2014
beta-BHC	<2.0	ug/Kg		3/12/2014
cis-Chlordane	<2.0	ug/Kg		3/12/2014
delta-BHC	<2.0	ug/Kg		3/12/2014
Dieldrin	<3.9	ug/Kg		3/12/2014
Endosulfan I	<2.0	ug/Kg		3/12/2014

This report is part of a multipage document and should only be evaluated in its entirety. The Chain of Custody provides additional sample information, including compliance with the sample condition requirements upon receipt.

PARADIGM ENVIRONMENTAL SERVICES, INC.

Lab Project ID: 140763

Client: **PVE Sheffler**

Project Reference: 211-235 McGuiness Blvd, 500008

Sample Identifier: GB-2 12-14'
Lab Sample ID: 140763-02 **Date Sampled:** 3/3/2014
Matrix: Soil **Date Received:** 3/5/2014

Endosulfan II	<3.9	ug/Kg		3/12/2014
Endosulfan Sulfate	<3.9	ug/Kg		3/12/2014
Endrin	<3.9	ug/Kg		3/12/2014
Endrin Aldehyde	<3.9	ug/Kg		3/12/2014
Endrin Ketone	<3.9	ug/Kg		3/12/2014
gamma-BHC (Lindane)	<2.0	ug/Kg		3/12/2014
Heptachlor	<2.0	ug/Kg		3/12/2014
Heptachlor Epoxide	<2.0	ug/Kg		3/12/2014
Methoxychlor	<20	ug/Kg		3/12/2014
Toxaphene	<200	ug/Kg		3/12/2014
trans-Chlordane	<2.0	ug/Kg		3/12/2014

Method Reference(s): EPA 8081
EPA 3510C
Subcontractor ELAP ID: 10478

Volatile Organics

Analyte	Result	Units	Qualifier	Date Analyzed	
1,1,1-Trichloroethane	< 7.78	ug/Kg		3/5/2014	15:38
1,1,2,2-Tetrachloroethane	< 7.78	ug/Kg		3/5/2014	15:38
1,1,2-Trichloroethane	< 7.78	ug/Kg		3/5/2014	15:38
1,1-Dichloroethane	< 7.78	ug/Kg		3/5/2014	15:38
1,1-Dichloroethene	< 7.78	ug/Kg		3/5/2014	15:38
1,2,3-Trichlorobenzene	< 19.4	ug/Kg		3/5/2014	15:38
1,2,4-Trichlorobenzene	< 19.4	ug/Kg		3/5/2014	15:38
1,2,4-Trimethylbenzene	< 7.78	ug/Kg		3/5/2014	15:38
1,2-Dibromo-3-Chloropropane	< 38.9	ug/Kg		3/5/2014	15:38
1,2-Dibromoethane	< 7.78	ug/Kg		3/5/2014	15:38
1,2-Dichlorobenzene	< 7.78	ug/Kg		3/5/2014	15:38
1,2-Dichloroethane	< 7.78	ug/Kg		3/5/2014	15:38

This report is part of a multipage document and should only be evaluated in its entirety. The Chain of Custody provides additional sample information, including compliance with the sample condition requirements upon receipt.

PARADIGM ENVIRONMENTAL SERVICES, INC.

Lab Project ID: 140763

Client: **PVE Sheffler**

Project Reference: 211-235 McGuiness Blvd, 500008

Sample Identifier: GB-2 12-14'
Lab Sample ID: 140763-02 **Date Sampled:** 3/3/2014
Matrix: Soil **Date Received:** 3/5/2014

1,2-Dichloropropane	< 7.78	ug/Kg	3/5/2014	15:38
1,3,5-Trimethylbenzene	< 7.78	ug/Kg	3/5/2014	15:38
1,3-Dichlorobenzene	< 7.78	ug/Kg	3/5/2014	15:38
1,4-Dichlorobenzene	< 7.78	ug/Kg	3/5/2014	15:38
1,4-dioxane	< 77.8	ug/Kg	3/5/2014	15:38
2-Butanone	< 38.9	ug/Kg	3/5/2014	15:38
2-Hexanone	< 19.4	ug/Kg	3/5/2014	15:38
4-Methyl-2-pentanone	< 19.4	ug/Kg	3/5/2014	15:38
Acetone	< 38.9	ug/Kg	3/5/2014	15:38
Benzene	< 7.78	ug/Kg	3/5/2014	15:38
Bromochloromethane	< 19.4	ug/Kg	3/5/2014	15:38
Bromodichloromethane	< 7.78	ug/Kg	3/5/2014	15:38
Bromoform	< 19.4	ug/Kg	3/5/2014	15:38
Bromomethane	< 7.78	ug/Kg	3/5/2014	15:38
Carbon disulfide	< 7.78	ug/Kg	3/5/2014	15:38
Carbon Tetrachloride	< 7.78	ug/Kg	3/5/2014	15:38
Chlorobenzene	< 7.78	ug/Kg	3/5/2014	15:38
Chloroethane	< 7.78	ug/Kg	3/5/2014	15:38
Chloroform	< 7.78	ug/Kg	3/5/2014	15:38
Chloromethane	< 7.78	ug/Kg	3/5/2014	15:38
cis-1,2-Dichloroethene	< 7.78	ug/Kg	3/5/2014	15:38
cis-1,3-Dichloropropene	< 7.78	ug/Kg	3/5/2014	15:38
Cyclohexane	< 38.9	ug/Kg	3/5/2014	15:38
Dibromochloromethane	< 7.78	ug/Kg	3/5/2014	15:38
Dichlorodifluoromethane	< 7.78	ug/Kg	3/5/2014	15:38
Ethylbenzene	< 7.78	ug/Kg	3/5/2014	15:38
Freon 113	< 7.78	ug/Kg	3/5/2014	15:38
Isopropylbenzene	< 7.78	ug/Kg	3/5/2014	15:38

This report is part of a multipage document and should only be evaluated in its entirety. The Chain of Custody provides additional sample information, including compliance with the sample condition requirements upon receipt.

PARADIGM ENVIRONMENTAL SERVICES, INC.

Lab Project ID: 140763

Client: **PVE Sheffler**

Project Reference: 211-235 McGuiness Blvd, 500008

Sample Identifier: GB-2 12-14'
Lab Sample ID: 140763-02 **Date Sampled:** 3/3/2014
Matrix: Soil **Date Received:** 3/5/2014

m,p-Xylene	< 7.78	ug/Kg	3/5/2014	15:38
Methyl acetate	< 7.78	ug/Kg	3/5/2014	15:38
Methyl tert-butyl Ether	< 7.78	ug/Kg	3/5/2014	15:38
Methylcyclohexane	< 7.78	ug/Kg	3/5/2014	15:38
Methylene chloride	< 19.4	ug/Kg	3/5/2014	15:38
Naphthalene	< 19.4	ug/Kg	3/5/2014	15:38
n-Butylbenzene	< 7.78	ug/Kg	3/5/2014	15:38
n-Propylbenzene	< 7.78	ug/Kg	3/5/2014	15:38
o-Xylene	< 7.78	ug/Kg	3/5/2014	15:38
p-Isopropyltoluene	< 7.78	ug/Kg	3/5/2014	15:38
sec-Butylbenzene	< 7.78	ug/Kg	3/5/2014	15:38
Styrene	< 19.4	ug/Kg	3/5/2014	15:38
tert-Butylbenzene	< 7.78	ug/Kg	3/5/2014	15:38
Tetrachloroethene	< 7.78	ug/Kg	3/5/2014	15:38
Toluene	< 7.78	ug/Kg	3/5/2014	15:38
trans-1,2-Dichloroethene	< 7.78	ug/Kg	3/5/2014	15:38
trans-1,3-Dichloropropene	< 7.78	ug/Kg	3/5/2014	15:38
Trichloroethene	< 7.78	ug/Kg	3/5/2014	15:38
Trichlorofluoromethane	< 7.78	ug/Kg	3/5/2014	15:38
Vinyl chloride	< 7.78	ug/Kg	3/5/2014	15:38

Method Reference(s): EPA 8260C
EPA 5035A
Data File: x11652.D

Any Volatiles soil results that are less than 200 ug/Kg, including Non Detects, may be biased low, per ELAP method 5035 guidance document from 11/15/2012.

This report is part of a multipage document and should only be evaluated in its entirety. The Chain of Custody provides additional sample information, including compliance with the sample condition requirements upon receipt.

PARADIGM ENVIRONMENTAL SERVICES, INC.

Lab Project ID: 140763

Client: **PVE Sheffler**

Project Reference: 211-235 McGuiness Blvd, 500008

Sample Identifier: GB-3 14-16'
Lab Sample ID: 140763-03 **Date Sampled:** 3/3/2014
Matrix: Soil **Date Received:** 3/5/2014

Hexavalent Chromium

Analyte	Result	Units	Qualifier	Date Analyzed
Chrome, Hexavalent	<1.2	mg/Kg		3/7/2014

Method Reference(s): EPA 7196
Subcontractor ELAP ID: 10478

Total Cyanide

Analyte	Result	Units	Qualifier	Date Analyzed
Cyanide, Total	<0.59	mg/Kg		3/9/2014

Method Reference(s): EPA 9014
Subcontractor ELAP ID: 10478

Part 375 Metals (ICP)

Analyte	Result	Units	Qualifier	Date Analyzed	
Arsenic	**3.55**	mg/Kg		3/10/2014	14:55
Barium	**32.7**	mg/Kg		3/10/2014	14:55
Beryllium	< 0.662	mg/Kg		3/10/2014	14:55
Cadmium	< 0.662	mg/Kg		3/10/2014	14:55
Chromium	**18.8**	mg/Kg		3/10/2014	14:55
Copper	**8.50**	mg/Kg		3/10/2014	14:55
Lead	**3.62**	mg/Kg		3/7/2014	17:58
Manganese	**127**	mg/Kg		3/10/2014	14:55
Nickel	**10.3**	mg/Kg		3/10/2014	14:55
Selenium	< 1.32	mg/Kg		3/10/2014	14:55
Silver	< 1.32	mg/Kg		3/10/2014	14:55
Zinc	**28.7**	mg/Kg		3/10/2014	14:55

Method Reference(s): EPA 6010C
EPA 3050
Data File: 031014a

This report is part of a multipage document and should only be evaluated in its entirety. The Chain of Custody provides additional sample information, including compliance with the sample condition requirements upon receipt.

PARADIGM ENVIRONMENTAL SERVICES, INC.

Lab Project ID: 140763

Client: **PVE Sheffler**

Project Reference: 211-235 McGuiness Blvd, 500008

Sample Identifier: GB-3 14-16'
Lab Sample ID: 140763-03 **Date Sampled:** 3/3/2014
Matrix: Soil **Date Received:** 3/5/2014

Mercury

Analyte	Result	Units	Qualifier	Date Analyzed	
Mercury	< 0.0234	mg/Kg		3/10/2014	14:07

Method Reference(s): EPA 7471B
Data File: Hg140310A

PCBs

Analyte	Result	Units	Qualifier	Date Analyzed	
PCB-1016	< 0.0354	mg/Kg		3/6/2014	18:06
PCB-1221	< 0.0354	mg/Kg		3/6/2014	18:06
PCB-1232	< 0.0354	mg/Kg		3/6/2014	18:06
PCB-1242	< 0.0354	mg/Kg		3/6/2014	18:06
PCB-1248	< 0.0354	mg/Kg		3/6/2014	18:06
PCB-1254	< 0.0354	mg/Kg		3/6/2014	18:06
PCB-1260	< 0.0354	mg/Kg		3/6/2014	18:06
PCB-1262	< 0.0354	mg/Kg		3/6/2014	18:06
PCB-1268	< 0.0354	mg/Kg		3/6/2014	18:06

Method Reference(s): EPA 8082A
EPA 3550C

Semi-Volatile Organics (Acid/Base Neutrals)

Analyte	Result	Units	Qualifier	Date Analyzed	
1,1-Biphenyl	< 328	ug/Kg		3/6/2014	19:22
1,2,4,5-Tetrachlorobenzene	< 328	ug/Kg		3/6/2014	19:22
1,2,4-Trichlorobenzene	< 328	ug/Kg		3/6/2014	19:22
1,2-Dichlorobenzene	< 328	ug/Kg		3/6/2014	19:22
1,3-Dichlorobenzene	< 328	ug/Kg		3/6/2014	19:22
1,4-Dichlorobenzene	< 328	ug/Kg		3/6/2014	19:22
2,3,4,6-Tetrachlorophenol	< 328	ug/Kg		3/6/2014	19:22

This report is part of a multipage document and should only be evaluated in its entirety. The Chain of Custody provides additional sample information, including compliance with the sample condition requirements upon receipt.

PARADIGM ENVIRONMENTAL SERVICES, INC.

Lab Project ID: 140763

Client: **PVE Sheffler**

Project Reference: 211-235 McGuiness Blvd, 500008

Sample Identifier: GB-3 14-16'
Lab Sample ID: 140763-03 **Date Sampled:** 3/3/2014
Matrix: Soil **Date Received:** 3/5/2014

2,4,5-Trichlorophenol	< 656	ug/Kg	3/6/2014	19:22
2,4,6-Trichlorophenol	< 328	ug/Kg	3/6/2014	19:22
2,4-Dichlorophenol	< 328	ug/Kg	3/6/2014	19:22
2,4-Dimethylphenol	< 328	ug/Kg	3/6/2014	19:22
2,4-Dinitrophenol	< 656	ug/Kg	3/6/2014	19:22
2,4-Dinitrotoluene	< 328	ug/Kg	3/6/2014	19:22
2,6-Dinitrotoluene	< 328	ug/Kg	3/6/2014	19:22
2-Chloronaphthalene	< 328	ug/Kg	3/6/2014	19:22
2-Chlorophenol	< 328	ug/Kg	3/6/2014	19:22
2-Methylnapthalene	< 328	ug/Kg	3/6/2014	19:22
2-Methylphenol	< 328	ug/Kg	3/6/2014	19:22
2-Nitroaniline	< 656	ug/Kg	3/6/2014	19:22
2-Nitrophenol	< 328	ug/Kg	3/6/2014	19:22
3&4-Methylphenol	< 328	ug/Kg	3/6/2014	19:22
3,3'-Dichlorobenzidine	< 328	ug/Kg	3/6/2014	19:22
3-Nitroaniline	< 656	ug/Kg	3/6/2014	19:22
4,6-Dinitro-2-methylphenol	< 656	ug/Kg	3/6/2014	19:22
4-Bromophenyl phenyl ether	< 328	ug/Kg	3/6/2014	19:22
4-Chloro-3-methylphenol	< 328	ug/Kg	3/6/2014	19:22
4-Chloroaniline	< 328	ug/Kg	3/6/2014	19:22
4-Chlorophenyl phenyl ether	< 328	ug/Kg	3/6/2014	19:22
4-Nitroaniline	< 656	ug/Kg	3/6/2014	19:22
4-Nitrophenol	< 656	ug/Kg	3/6/2014	19:22
Acenaphthene	< 328	ug/Kg	3/6/2014	19:22
Acenaphthylene	< 328	ug/Kg	3/6/2014	19:22
Acetophenone	< 328	ug/Kg	3/6/2014	19:22
Anthracene	< 328	ug/Kg	3/6/2014	19:22
Atrazine	< 328	ug/Kg	3/6/2014	19:22

This report is part of a multipage document and should only be evaluated in its entirety. The Chain of Custody provides additional sample information, including compliance with the sample condition requirements upon receipt.

PARADIGM ENVIRONMENTAL SERVICES, INC.

Lab Project ID: 140763

Client: **PVE Sheffler**

Project Reference: 211-235 McGuiness Blvd, 500008

Sample Identifier: GB-3 14-16'
Lab Sample ID: 140763-03 **Date Sampled:** 3/3/2014
Matrix: Soil **Date Received:** 3/5/2014

Benzaldehyde	< 328	ug/Kg	3/6/2014	19:22
Benzo (a) anthracene	< 328	ug/Kg	3/6/2014	19:22
Benzo (a) pyrene	< 328	ug/Kg	3/6/2014	19:22
Benzo (b) fluoranthene	< 328	ug/Kg	3/6/2014	19:22
Benzo (g,h,i) perylene	< 328	ug/Kg	3/6/2014	19:22
Benzo (k) fluoranthene	< 328	ug/Kg	3/6/2014	19:22
Bis (2-chloroethoxy) methane	< 328	ug/Kg	3/6/2014	19:22
Bis (2-chloroethyl) ether	< 328	ug/Kg	3/6/2014	19:22
Bis (2-chloroisopropyl) ether	< 328	ug/Kg	3/6/2014	19:22
Bis (2-ethylhexyl) phthalate	< 328	ug/Kg	3/6/2014	19:22
Butylbenzylphthalate	< 328	ug/Kg	3/6/2014	19:22
Caprolactam	< 328	ug/Kg	3/6/2014	19:22
Carbazole	< 328	ug/Kg	3/6/2014	19:22
Chrysene	< 328	ug/Kg	3/6/2014	19:22
Dibenz (a,h) anthracene	< 328	ug/Kg	3/6/2014	19:22
Dibenzofuran	< 328	ug/Kg	3/6/2014	19:22
Diethyl phthalate	< 328	ug/Kg	3/6/2014	19:22
Dimethyl phthalate	< 656	ug/Kg	3/6/2014	19:22
Di-n-butyl phthalate	< 328	ug/Kg	3/6/2014	19:22
Di-n-octylphthalate	< 328	ug/Kg	3/6/2014	19:22
Fluoranthene	< 328	ug/Kg	3/6/2014	19:22
Fluorene	< 328	ug/Kg	3/6/2014	19:22
Hexachlorobenzene	< 328	ug/Kg	3/6/2014	19:22
Hexachlorobutadiene	< 328	ug/Kg	3/6/2014	19:22
Hexachlorocyclopentadiene	< 328	ug/Kg	3/6/2014	19:22
Hexachloroethane	< 328	ug/Kg	3/6/2014	19:22
Indeno (1,2,3-cd) pyrene	< 328	ug/Kg	3/6/2014	19:22
Isophorone	< 328	ug/Kg	3/6/2014	19:22

This report is part of a multipage document and should only be evaluated in its entirety. The Chain of Custody provides additional sample information, including compliance with the sample condition requirements upon receipt.

PARADIGM ENVIRONMENTAL SERVICES, INC.

Lab Project ID: 140763

Client: **PVE Sheffler**

Project Reference: 211-235 McGuiness Blvd, 500008

Sample Identifier: GB-3 14-16'
Lab Sample ID: 140763-03 **Date Sampled:** 3/3/2014
Matrix: Soil **Date Received:** 3/5/2014

Naphthalene	< 328	ug/Kg		3/6/2014	19:22
Nitrobenzene	< 328	ug/Kg		3/6/2014	19:22
N-Nitroso-di-n-propylamine	< 328	ug/Kg		3/6/2014	19:22
N-Nitrosodiphenylamine	< 328	ug/Kg		3/6/2014	19:22
Pentachlorophenol	< 656	ug/Kg		3/6/2014	19:22
Phenanthrene	< 328	ug/Kg		3/6/2014	19:22
Phenol	< 328	ug/Kg		3/6/2014	19:22
Pyrene	< 328	ug/Kg		3/6/2014	19:22

Method Reference(s): EPA 8270D
EPA 3550C
Data File: S75318.D

Herbicides

Analyte	Result	Units	Qualifier	Date Analyzed
2,4,5-TP (Silvex)	<5.9	ug/Kg		3/12/2014

Method Reference(s): EPA 8151
Subcontractor ELAP ID: 10478

Chlorinated Pesticides

Analyte	Result	Units	Qualifier	Date Analyzed
4,4-DDD	<3.9	ug/Kg		3/12/2014
4,4-DDE	<3.9	ug/Kg		3/12/2014
4,4-DDT	<3.9	ug/Kg		3/12/2014
Aldrin	<2.0	ug/Kg		3/12/2014
alpha-BHC	<2.0	ug/Kg		3/12/2014
beta-BHC	<2.0	ug/Kg		3/12/2014
cis-Chlordane	<2.0	ug/Kg		3/12/2014
delta-BHC	<2.0	ug/Kg		3/12/2014
Dieldrin	<3.9	ug/Kg		3/12/2014
Endosulfan I	<2.0	ug/Kg		3/12/2014

This report is part of a multipage document and should only be evaluated in its entirety. The Chain of Custody provides additional sample information, including compliance with the sample condition requirements upon receipt.

PARADIGM ENVIRONMENTAL SERVICES, INC.

Lab Project ID: 140763

Client: **PVE Sheffler**

Project Reference: 211-235 McGuiness Blvd, 500008

Sample Identifier: GB-3 14-16'
Lab Sample ID: 140763-03 **Date Sampled:** 3/3/2014
Matrix: Soil **Date Received:** 3/5/2014

Endosulfan II	<3.9	ug/Kg		3/12/2014
Endosulfan Sulfate	<3.9	ug/Kg		3/12/2014
Endrin	<3.9	ug/Kg		3/12/2014
Endrin Aldehyde	<3.9	ug/Kg		3/12/2014
Endrin Ketone	<3.9	ug/Kg		3/12/2014
gamma-BHC (Lindane)	<2.0	ug/Kg		3/12/2014
Heptachlor	<2.0	ug/Kg		3/12/2014
Heptachlor Epoxide	<2.0	ug/Kg		3/12/2014
Methoxychlor	<20	ug/Kg		3/12/2014
Toxaphene	<200	ug/Kg		3/12/2014
trans-Chlordane	<2.0	ug/Kg		3/12/2014

Method Reference(s): EPA 8081
EPA 3510C
Subcontractor ELAP ID: 10478

Volatile Organics

Analyte	Result	Units	Qualifier	Date Analyzed	
1,1,1-Trichloroethane	< 6.92	ug/Kg		3/5/2014	16:02
1,1,2,2-Tetrachloroethane	< 6.92	ug/Kg		3/5/2014	16:02
1,1,2-Trichloroethane	< 6.92	ug/Kg		3/5/2014	16:02
1,1-Dichloroethane	< 6.92	ug/Kg		3/5/2014	16:02
1,1-Dichloroethene	< 6.92	ug/Kg		3/5/2014	16:02
1,2,3-Trichlorobenzene	< 17.3	ug/Kg		3/5/2014	16:02
1,2,4-Trichlorobenzene	< 17.3	ug/Kg		3/5/2014	16:02
1,2,4-Trimethylbenzene	< 6.92	ug/Kg		3/5/2014	16:02
1,2-Dibromo-3-Chloropropane	< 34.6	ug/Kg		3/5/2014	16:02
1,2-Dibromoethane	< 6.92	ug/Kg		3/5/2014	16:02
1,2-Dichlorobenzene	< 6.92	ug/Kg		3/5/2014	16:02
1,2-Dichloroethane	< 6.92	ug/Kg		3/5/2014	16:02

This report is part of a multipage document and should only be evaluated in its entirety. The Chain of Custody provides additional sample information, including compliance with the sample condition requirements upon receipt.

PARADIGM ENVIRONMENTAL SERVICES, INC.

Lab Project ID: 140763

Client: **PVE Sheffler**

Project Reference: 211-235 McGuiness Blvd, 500008

Sample Identifier: GB-3 14-16'
Lab Sample ID: 140763-03 **Date Sampled:** 3/3/2014
Matrix: Soil **Date Received:** 3/5/2014

1,2-Dichloropropane	< 6.92	ug/Kg	3/5/2014	16:02
1,3,5-Trimethylbenzene	< 6.92	ug/Kg	3/5/2014	16:02
1,3-Dichlorobenzene	< 6.92	ug/Kg	3/5/2014	16:02
1,4-Dichlorobenzene	< 6.92	ug/Kg	3/5/2014	16:02
1,4-dioxane	< 69.2	ug/Kg	3/5/2014	16:02
2-Butanone	< 34.6	ug/Kg	3/5/2014	16:02
2-Hexanone	< 17.3	ug/Kg	3/5/2014	16:02
4-Methyl-2-pentanone	< 17.3	ug/Kg	3/5/2014	16:02
Acetone	**38.7**	ug/Kg	3/5/2014	16:02
Benzene	< 6.92	ug/Kg	3/5/2014	16:02
Bromochloromethane	< 17.3	ug/Kg	3/5/2014	16:02
Bromodichloromethane	< 6.92	ug/Kg	3/5/2014	16:02
Bromoform	< 17.3	ug/Kg	3/5/2014	16:02
Bromomethane	< 6.92	ug/Kg	3/5/2014	16:02
Carbon disulfide	< 6.92	ug/Kg	3/5/2014	16:02
Carbon Tetrachloride	< 6.92	ug/Kg	3/5/2014	16:02
Chlorobenzene	< 6.92	ug/Kg	3/5/2014	16:02
Chloroethane	< 6.92	ug/Kg	3/5/2014	16:02
Chloroform	< 6.92	ug/Kg	3/5/2014	16:02
Chloromethane	< 6.92	ug/Kg	3/5/2014	16:02
cis-1,2-Dichloroethene	< 6.92	ug/Kg	3/5/2014	16:02
cis-1,3-Dichloropropene	< 6.92	ug/Kg	3/5/2014	16:02
Cyclohexane	< 34.6	ug/Kg	3/5/2014	16:02
Dibromochloromethane	< 6.92	ug/Kg	3/5/2014	16:02
Dichlorodifluoromethane	< 6.92	ug/Kg	3/5/2014	16:02
Ethylbenzene	< 6.92	ug/Kg	3/5/2014	16:02
Freon 113	< 6.92	ug/Kg	3/5/2014	16:02
Isopropylbenzene	< 6.92	ug/Kg	3/5/2014	16:02

This report is part of a multipage document and should only be evaluated in its entirety. The Chain of Custody provides additional sample information, including compliance with the sample condition requirements upon receipt.

PARADIGM ENVIRONMENTAL SERVICES, INC.

Lab Project ID: 140763

Client: **PVE Sheffler**

Project Reference: 211-235 McGuiness Blvd, 500008

Sample Identifier: GB-3 14-16'
Lab Sample ID: 140763-03 **Date Sampled:** 3/3/2014
Matrix: Soil **Date Received:** 3/5/2014

m,p-Xylene	< 6.92	ug/Kg	3/5/2014	16:02
Methyl acetate	< 6.92	ug/Kg	3/5/2014	16:02
Methyl tert-butyl Ether	< 6.92	ug/Kg	3/5/2014	16:02
Methylcyclohexane	< 6.92	ug/Kg	3/5/2014	16:02
Methylene chloride	< 17.3	ug/Kg	3/5/2014	16:02
Naphthalene	< 17.3	ug/Kg	3/5/2014	16:02
n-Butylbenzene	< 6.92	ug/Kg	3/5/2014	16:02
n-Propylbenzene	< 6.92	ug/Kg	3/5/2014	16:02
o-Xylene	< 6.92	ug/Kg	3/5/2014	16:02
p-Isopropyltoluene	< 6.92	ug/Kg	3/5/2014	16:02
sec-Butylbenzene	< 6.92	ug/Kg	3/5/2014	16:02
Styrene	< 17.3	ug/Kg	3/5/2014	16:02
tert-Butylbenzene	< 6.92	ug/Kg	3/5/2014	16:02
Tetrachloroethene	< 6.92	ug/Kg	3/5/2014	16:02
Toluene	< 6.92	ug/Kg	3/5/2014	16:02
trans-1,2-Dichloroethene	< 6.92	ug/Kg	3/5/2014	16:02
trans-1,3-Dichloropropene	< 6.92	ug/Kg	3/5/2014	16:02
Trichloroethene	< 6.92	ug/Kg	3/5/2014	16:02
Trichlorofluoromethane	< 6.92	ug/Kg	3/5/2014	16:02
Vinyl chloride	< 6.92	ug/Kg	3/5/2014	16:02

Surrogate outliers indicate probable matrix interference

Method Reference(s): EPA 8260C
EPA 5035A
Data File: x11653.D

Any Volatiles soil results that are less than 200 ug/Kg, including Non Detects, may be biased low, per ELAP method 5035 guidance document from 11/15/2012.

This report is part of a multipage document and should only be evaluated in its entirety. The Chain of Custody provides additional sample information, including compliance with the sample condition requirements upon receipt.

PARADIGM ENVIRONMENTAL SERVICES, INC.

Lab Project ID: 140763

Client: **PVE Sheffler**

Project Reference: 211-235 McGuiness Blvd, 500008

Sample Identifier: B-1 8.5-10'
Lab Sample ID: 140763-04 **Date Sampled:** 3/3/2014
Matrix: Soil **Date Received:** 3/5/2014

Hexavalent Chromium

Analyte	Result	Units	Qualifier	Date Analyzed
Chrome, Hexavalent	<1.1	mg/Kg		3/7/2014

Method Reference(s): EPA 7196
Subcontractor ELAP ID: 10478

Total Cyanide

Analyte	Result	Units	Qualifier	Date Analyzed
Cyanide, Total	<0.55	mg/Kg		3/9/2014

Method Reference(s): EPA 9014
Subcontractor ELAP ID: 10478

Part 375 Metals (ICP)

Analyte	Result	Units	Qualifier	Date Analyzed	
Arsenic	**2.75**	mg/Kg		3/10/2014	14:59
Barium	**21.8**	mg/Kg		3/10/2014	14:59
Beryllium	< 0.537	mg/Kg		3/10/2014	14:59
Cadmium	< 0.537	mg/Kg		3/10/2014	14:59
Chromium	**12.3**	mg/Kg		3/10/2014	14:59
Copper	**7.85**	mg/Kg		3/10/2014	14:59
Lead	**3.36**	mg/Kg		3/7/2014	18:03
Manganese	**133**	mg/Kg		3/10/2014	14:59
Nickel	**10.5**	mg/Kg		3/10/2014	14:59
Selenium	< 1.07	mg/Kg		3/10/2014	14:59
Silver	< 1.07	mg/Kg		3/10/2014	14:59
Zinc	**25.7**	mg/Kg		3/10/2014	14:59

Method Reference(s): EPA 6010C
EPA 3050
Data File: 031014a

This report is part of a multipage document and should only be evaluated in its entirety. The Chain of Custody provides additional sample information, including compliance with the sample condition requirements upon receipt.

PARADIGM ENVIRONMENTAL SERVICES, INC.

Lab Project ID: 140763

Client: **PVE Sheffler**

Project Reference: 211-235 McGuiness Blvd, 500008

Sample Identifier: B-1 8.5-10'
Lab Sample ID: 140763-04 **Date Sampled:** 3/3/2014
Matrix: Soil **Date Received:** 3/5/2014

Mercury

Analyte	Result	Units	Qualifier	Date Analyzed	
Mercury	< 0.0181	mg/Kg		3/10/2014	14:10

Method Reference(s): EPA 7471B
Data File: Hg140310A

PCBs

Analyte	Result	Units	Qualifier	Date Analyzed	
PCB-1016	< 0.0313	mg/Kg		3/6/2014	18:29
PCB-1221	< 0.0313	mg/Kg		3/6/2014	18:29
PCB-1232	< 0.0313	mg/Kg		3/6/2014	18:29
PCB-1242	< 0.0313	mg/Kg		3/6/2014	18:29
PCB-1248	< 0.0313	mg/Kg		3/6/2014	18:29
PCB-1254	< 0.0313	mg/Kg		3/6/2014	18:29
PCB-1260	< 0.0313	mg/Kg		3/6/2014	18:29
PCB-1262	< 0.0313	mg/Kg		3/6/2014	18:29
PCB-1268	< 0.0313	mg/Kg		3/6/2014	18:29

Method Reference(s): EPA 8082A
EPA 3550C

Semi-Volatile Organics (Acid/Base Neutrals)

Analyte	Result	Units	Qualifier	Date Analyzed	
1,1-Biphenyl	< 315	ug/Kg		3/6/2014	19:53
1,2,4,5-Tetrachlorobenzene	< 315	ug/Kg		3/6/2014	19:53
1,2,4-Trichlorobenzene	< 315	ug/Kg		3/6/2014	19:53
1,2-Dichlorobenzene	< 315	ug/Kg		3/6/2014	19:53
1,3-Dichlorobenzene	< 315	ug/Kg		3/6/2014	19:53
1,4-Dichlorobenzene	< 315	ug/Kg		3/6/2014	19:53
2,3,4,6-Tetrachlorophenol	< 315	ug/Kg		3/6/2014	19:53

This report is part of a multipage document and should only be evaluated in its entirety. The Chain of Custody provides additional sample information, including compliance with the sample condition requirements upon receipt.

PARADIGM ENVIRONMENTAL SERVICES, INC.

Lab Project ID: 140763

Client: **PVE Sheffler**

Project Reference: 211-235 McGuiness Blvd, 500008

Sample Identifier: B-1 8.5-10'
Lab Sample ID: 140763-04 **Date Sampled:** 3/3/2014
Matrix: Soil **Date Received:** 3/5/2014

2,4,5-Trichlorophenol	< 630	ug/Kg	3/6/2014	19:53
2,4,6-Trichlorophenol	< 315	ug/Kg	3/6/2014	19:53
2,4-Dichlorophenol	< 315	ug/Kg	3/6/2014	19:53
2,4-Dimethylphenol	< 315	ug/Kg	3/6/2014	19:53
2,4-Dinitrophenol	< 630	ug/Kg	3/6/2014	19:53
2,4-Dinitrotoluene	< 315	ug/Kg	3/6/2014	19:53
2,6-Dinitrotoluene	< 315	ug/Kg	3/6/2014	19:53
2-Chloronaphthalene	< 315	ug/Kg	3/6/2014	19:53
2-Chlorophenol	< 315	ug/Kg	3/6/2014	19:53
2-Methylnapthalene	< 315	ug/Kg	3/6/2014	19:53
2-Methylphenol	< 315	ug/Kg	3/6/2014	19:53
2-Nitroaniline	< 630	ug/Kg	3/6/2014	19:53
2-Nitrophenol	< 315	ug/Kg	3/6/2014	19:53
3&4-Methylphenol	< 315	ug/Kg	3/6/2014	19:53
3,3'-Dichlorobenzidine	< 315	ug/Kg	3/6/2014	19:53
3-Nitroaniline	< 630	ug/Kg	3/6/2014	19:53
4,6-Dinitro-2-methylphenol	< 630	ug/Kg	3/6/2014	19:53
4-Bromophenyl phenyl ether	< 315	ug/Kg	3/6/2014	19:53
4-Chloro-3-methylphenol	< 315	ug/Kg	3/6/2014	19:53
4-Chloroaniline	< 315	ug/Kg	3/6/2014	19:53
4-Chlorophenyl phenyl ether	< 315	ug/Kg	3/6/2014	19:53
4-Nitroaniline	< 630	ug/Kg	3/6/2014	19:53
4-Nitrophenol	< 630	ug/Kg	3/6/2014	19:53
Acenaphthene	< 315	ug/Kg	3/6/2014	19:53
Acenaphthylene	< 315	ug/Kg	3/6/2014	19:53
Acetophenone	< 315	ug/Kg	3/6/2014	19:53
Anthracene	< 315	ug/Kg	3/6/2014	19:53
Atrazine	< 315	ug/Kg	3/6/2014	19:53

This report is part of a multipage document and should only be evaluated in its entirety. The Chain of Custody provides additional sample information, including compliance with the sample condition requirements upon receipt.

PARADIGM ENVIRONMENTAL SERVICES, INC.

Lab Project ID: 140763

Client: **PVE Sheffler**

Project Reference: 211-235 McGuiness Blvd, 500008

Sample Identifier: B-1 8.5-10'
Lab Sample ID: 140763-04 **Date Sampled:** 3/3/2014
Matrix: Soil **Date Received:** 3/5/2014

Benzaldehyde	< 315	ug/Kg	3/6/2014	19:53
Benzo (a) anthracene	< 315	ug/Kg	3/6/2014	19:53
Benzo (a) pyrene	< 315	ug/Kg	3/6/2014	19:53
Benzo (b) fluoranthene	< 315	ug/Kg	3/6/2014	19:53
Benzo (g,h,i) perylene	< 315	ug/Kg	3/6/2014	19:53
Benzo (k) fluoranthene	< 315	ug/Kg	3/6/2014	19:53
Bis (2-chloroethoxy) methane	< 315	ug/Kg	3/6/2014	19:53
Bis (2-chloroethyl) ether	< 315	ug/Kg	3/6/2014	19:53
Bis (2-chloroisopropyl) ether	< 315	ug/Kg	3/6/2014	19:53
Bis (2-ethylhexyl) phthalate	< 315	ug/Kg	3/6/2014	19:53
Butylbenzylphthalate	< 315	ug/Kg	3/6/2014	19:53
Caprolactam	< 315	ug/Kg	3/6/2014	19:53
Carbazole	< 315	ug/Kg	3/6/2014	19:53
Chrysene	< 315	ug/Kg	3/6/2014	19:53
Dibenz (a,h) anthracene	< 315	ug/Kg	3/6/2014	19:53
Dibenzofuran	< 315	ug/Kg	3/6/2014	19:53
Diethyl phthalate	< 315	ug/Kg	3/6/2014	19:53
Dimethyl phthalate	< 630	ug/Kg	3/6/2014	19:53
Di-n-butyl phthalate	< 315	ug/Kg	3/6/2014	19:53
Di-n-octylphthalate	< 315	ug/Kg	3/6/2014	19:53
Fluoranthene	< 315	ug/Kg	3/6/2014	19:53
Fluorene	< 315	ug/Kg	3/6/2014	19:53
Hexachlorobenzene	< 315	ug/Kg	3/6/2014	19:53
Hexachlorobutadiene	< 315	ug/Kg	3/6/2014	19:53
Hexachlorocyclopentadiene	< 315	ug/Kg	3/6/2014	19:53
Hexachloroethane	< 315	ug/Kg	3/6/2014	19:53
Indeno (1,2,3-cd) pyrene	< 315	ug/Kg	3/6/2014	19:53
Isophorone	< 315	ug/Kg	3/6/2014	19:53

This report is part of a multipage document and should only be evaluated in its entirety. The Chain of Custody provides additional sample information, including compliance with the sample condition requirements upon receipt.

PARADIGM ENVIRONMENTAL SERVICES, INC.

Lab Project ID: 140763

Client: **PVE Sheffler**

Project Reference: 211-235 McGuiness Blvd, 500008

Sample Identifier: B-1 8.5-10'
Lab Sample ID: 140763-04 **Date Sampled:** 3/3/2014
Matrix: Soil **Date Received:** 3/5/2014

Naphthalene	< 315	ug/Kg		3/6/2014	19:53
Nitrobenzene	< 315	ug/Kg		3/6/2014	19:53
N-Nitroso-di-n-propylamine	< 315	ug/Kg		3/6/2014	19:53
N-Nitrosodiphenylamine	< 315	ug/Kg		3/6/2014	19:53
Pentachlorophenol	< 630	ug/Kg		3/6/2014	19:53
Phenanthrene	< 315	ug/Kg		3/6/2014	19:53
Phenol	< 315	ug/Kg		3/6/2014	19:53
Pyrene	< 315	ug/Kg		3/6/2014	19:53

Method Reference(s): EPA 8270D
EPA 3550C
Data File: S75319.D

Herbicides

Analyte	Result	Units	Qualifier	Date Analyzed
2,4,5-TP (Silvex)	<5.5	ug/Kg		3/12/2014

Method Reference(s): EPA 8151
Subcontractor ELAP ID: 10478

Chlorinated Pesticides

Analyte	Result	Units	Qualifier	Date Analyzed
4,4-DDD	<3.6	ug/Kg		3/12/2014
4,4-DDE	<3.6	ug/Kg		3/12/2014
4,4-DDT	<3.6	ug/Kg		3/12/2014
Aldrin	<1.9	ug/Kg		3/12/2014
alpha-BHC	<1.9	ug/Kg		3/12/2014
beta-BHC	<1.9	ug/Kg		3/12/2014
cis-Chlordane	<1.9	ug/Kg		3/12/2014
delta-BHC	<1.9	ug/Kg		3/12/2014
Dieldrin	<3.6	ug/Kg		3/12/2014
Endosulfan I	<1.9	ug/Kg		3/12/2014

This report is part of a multipage document and should only be evaluated in its entirety. The Chain of Custody provides additional sample information, including compliance with the sample condition requirements upon receipt.

PARADIGM ENVIRONMENTAL SERVICES, INC.

Lab Project ID: 140763

Client: **PVE Sheffler**

Project Reference: 211-235 McGuiness Blvd, 500008

Sample Identifier: B-1 8.5-10'
Lab Sample ID: 140763-04 **Date Sampled:** 3/3/2014
Matrix: Soil **Date Received:** 3/5/2014

Endosulfan II	<3.6	ug/Kg		3/12/2014
Endosulfan Sulfate	<3.6	ug/Kg		3/12/2014
Endrin	<3.6	ug/Kg		3/12/2014
Endrin Aldehyde	<3.6	ug/Kg		3/12/2014
Endrin Ketone	<3.6	ug/Kg		3/12/2014
gamma-BHC (Lindane)	<1.9	ug/Kg		3/12/2014
Heptachlor	<1.9	ug/Kg		3/12/2014
Heptachlor Epoxide	<1.9	ug/Kg		3/12/2014
Methoxychlor	<19	ug/Kg		3/12/2014
Toxaphene	<190	ug/Kg		3/12/2014
trans-Chlordane	<1.9	ug/Kg		3/12/2014

Method Reference(s): EPA 8081
EPA 3510C
Subcontractor ELAP ID: 10478

Volatile Organics

Analyte	Result	Units	Qualifier	Date Analyzed	
1,1,1-Trichloroethane	< 7.70	ug/Kg		3/5/2014	16:25
1,1,2,2-Tetrachloroethane	< 7.70	ug/Kg		3/5/2014	16:25
1,1,2-Trichloroethane	< 7.70	ug/Kg		3/5/2014	16:25
1,1-Dichloroethane	< 7.70	ug/Kg		3/5/2014	16:25
1,1-Dichloroethene	< 7.70	ug/Kg		3/5/2014	16:25
1,2,3-Trichlorobenzene	< 19.2	ug/Kg		3/5/2014	16:25
1,2,4-Trichlorobenzene	< 19.2	ug/Kg		3/5/2014	16:25
1,2,4-Trimethylbenzene	< 7.70	ug/Kg		3/5/2014	16:25
1,2-Dibromo-3-Chloropropane	< 38.5	ug/Kg		3/5/2014	16:25
1,2-Dibromoethane	< 7.70	ug/Kg		3/5/2014	16:25
1,2-Dichlorobenzene	< 7.70	ug/Kg		3/5/2014	16:25
1,2-Dichloroethane	< 7.70	ug/Kg		3/5/2014	16:25

This report is part of a multipage document and should only be evaluated in its entirety. The Chain of Custody provides additional sample information, including compliance with the sample condition requirements upon receipt.

PARADIGM ENVIRONMENTAL SERVICES, INC.

Lab Project ID: 140763

Client: **PVE Sheffler**

Project Reference: 211-235 McGuiness Blvd, 500008

Sample Identifier: B-1 8.5-10'
Lab Sample ID: 140763-04 **Date Sampled:** 3/3/2014
Matrix: Soil **Date Received:** 3/5/2014

1,2-Dichloropropane	< 7.70	ug/Kg	3/5/2014	16:25
1,3,5-Trimethylbenzene	< 7.70	ug/Kg	3/5/2014	16:25
1,3-Dichlorobenzene	< 7.70	ug/Kg	3/5/2014	16:25
1,4-Dichlorobenzene	< 7.70	ug/Kg	3/5/2014	16:25
1,4-dioxane	< 77.0	ug/Kg	3/5/2014	16:25
2-Butanone	< 38.5	ug/Kg	3/5/2014	16:25
2-Hexanone	< 19.2	ug/Kg	3/5/2014	16:25
4-Methyl-2-pentanone	< 19.2	ug/Kg	3/5/2014	16:25
Acetone	< 38.5	ug/Kg	3/5/2014	16:25
Benzene	< 7.70	ug/Kg	3/5/2014	16:25
Bromochloromethane	< 19.2	ug/Kg	3/5/2014	16:25
Bromodichloromethane	< 7.70	ug/Kg	3/5/2014	16:25
Bromoform	< 19.2	ug/Kg	3/5/2014	16:25
Bromomethane	< 7.70	ug/Kg	3/5/2014	16:25
Carbon disulfide	< 7.70	ug/Kg	3/5/2014	16:25
Carbon Tetrachloride	< 7.70	ug/Kg	3/5/2014	16:25
Chlorobenzene	< 7.70	ug/Kg	3/5/2014	16:25
Chloroethane	< 7.70	ug/Kg	3/5/2014	16:25
Chloroform	< 7.70	ug/Kg	3/5/2014	16:25
Chloromethane	< 7.70	ug/Kg	3/5/2014	16:25
cis-1,2-Dichloroethene	< 7.70	ug/Kg	3/5/2014	16:25
cis-1,3-Dichloropropene	< 7.70	ug/Kg	3/5/2014	16:25
Cyclohexane	< 38.5	ug/Kg	3/5/2014	16:25
Dibromochloromethane	< 7.70	ug/Kg	3/5/2014	16:25
Dichlorodifluoromethane	< 7.70	ug/Kg	3/5/2014	16:25
Ethylbenzene	< 7.70	ug/Kg	3/5/2014	16:25
Freon 113	< 7.70	ug/Kg	3/5/2014	16:25
Isopropylbenzene	< 7.70	ug/Kg	3/5/2014	16:25

This report is part of a multipage document and should only be evaluated in its entirety. The Chain of Custody provides additional sample information, including compliance with the sample condition requirements upon receipt.

PARADIGM ENVIRONMENTAL SERVICES, INC.

Lab Project ID: 140763

Client: **PVE Sheffler**

Project Reference: 211-235 McGuiness Blvd, 500008

Sample Identifier: B-1 8.5-10'
Lab Sample ID: 140763-04 **Date Sampled:** 3/3/2014
Matrix: Soil **Date Received:** 3/5/2014

m,p-Xylene	< 7.70	ug/Kg	3/5/2014	16:25
Methyl acetate	< 7.70	ug/Kg	3/5/2014	16:25
Methyl tert-butyl Ether	< 7.70	ug/Kg	3/5/2014	16:25
Methylcyclohexane	< 7.70	ug/Kg	3/5/2014	16:25
Methylene chloride	< 19.2	ug/Kg	3/5/2014	16:25
Naphthalene	< 19.2	ug/Kg	3/5/2014	16:25
n-Butylbenzene	< 7.70	ug/Kg	3/5/2014	16:25
n-Propylbenzene	< 7.70	ug/Kg	3/5/2014	16:25
o-Xylene	< 7.70	ug/Kg	3/5/2014	16:25
p-Isopropyltoluene	< 7.70	ug/Kg	3/5/2014	16:25
sec-Butylbenzene	< 7.70	ug/Kg	3/5/2014	16:25
Styrene	< 19.2	ug/Kg	3/5/2014	16:25
tert-Butylbenzene	< 7.70	ug/Kg	3/5/2014	16:25
Tetrachloroethene	< 7.70	ug/Kg	3/5/2014	16:25
Toluene	< 7.70	ug/Kg	3/5/2014	16:25
trans-1,2-Dichloroethene	< 7.70	ug/Kg	3/5/2014	16:25
trans-1,3-Dichloropropene	< 7.70	ug/Kg	3/5/2014	16:25
Trichloroethene	< 7.70	ug/Kg	3/5/2014	16:25
Trichlorofluoromethane	< 7.70	ug/Kg	3/5/2014	16:25
Vinyl chloride	< 7.70	ug/Kg	3/5/2014	16:25

Method Reference(s): EPA 8260C
EPA 5035A
Data File: x11654.D

Any Volatiles soil results that are less than 200 ug/Kg, including Non Detects, may be biased low, per ELAP method 5035 guidance document from 11/15/2012.

This report is part of a multipage document and should only be evaluated in its entirety. The Chain of Custody provides additional sample information, including compliance with the sample condition requirements upon receipt.

Analytical Report Appendix

The reported results relate only to the samples as they have been received by the laboratory.

Each page of this document is part of a multipage report. This document may not be reproduced except in its entirety, without the prior consent of Paradigm Environmental Services, Inc.

All soil/sludge samples have been reported on a dry weight basis, unless qualified "reported as received". Other solids are reported as received.

Low level Volatiles blank reports for soil/solid matrix are based on a nominal 5 gram weight. Sample results and reporting limits are based on actual weight, which may be more or less than 5 grams.

The Chain of Custody provides additional information, including compliance with sample condition requirements upon receipt. Sample condition requirements are defined under the 2003 NELAC Standard, sections 5.5.8.3.1 and 5.5.8.3.2.

NYSDOH ELAP does not certify for all parameters. Paradigm Environmental Services or the indicated subcontracted laboratory does hold certification for all analytes where certification is offered by ELAP unless otherwise specified. Aliquots separated for certain tests, such as TCLP, are indicated on the Chain of Custody and final reports with an "A" suffix.

Data qualifiers are used, when necessary, to provide additional information about the data. This information may be communicated as a flag or as text at the bottom of the report. Please refer to the following list of analyte-specific, frequently used data flags and their meaning:

"<" = Analyzed for but not detected at or above the quantitation limit.
"E" = Result has been estimated, calibration limit exceeded.
"Z" = See case narrative.
"D" = Sample, Laboratory Control Sample, or Matrix Spike Duplicate results above Relative Percent Difference limit.
"M" = Matrix spike recoveries outside QC limits. Matrix bias indicated.
"B" = Method blank contained trace levels of analyte. Refer to included method blank report.
"J" = Result estimated between the quantitation limit and half the quantitation limit.
"L" = Laboratory Control Sample recovery outside accepted QC limits.
"P" = Concentration differs by more than 40% between the primary and secondary analytical columns.

PARADIGM ENVIRONMENTAL SERVICES, INC.

179 Lake Avenue
Rochester, NY 14608
(585) 647-2530 • (800) 724-1997
FAX: (585) 647-3311

CHAIN OF CUSTODY

CPC CB KPH 3/4 PW 500008

REPORT TO:	INVOICE TO:	
COMPANY: PVE Sheffler	COMPANY: SAME	LAB PROJECT #: 140763 / CLIENT PROJECT #: ~~560920~~
ADDRESS: One Civic Center Plaza Suite 501	ADDRESS:	
CITY: Poughkeepsie STATE: NY ZIP: 12601	CITY: STATE: ZIP:	TURNAROUND TIME: (WORKING DAYS)
PHONE: 845-454-2544 FAX: -2655	PHONE: FAX:	STD ☒ OTHER ☐
PROJECT NAME/SITE NAME: 211-235 McGuiness Blvd, Brooklyn, NY	ATTN: S. Lewison, C. Tarbell, C. Brown	ATTN.: ☐ 1 ☐ 2 ☐ 3 ☒ 5 ☐
	COMMENTS: Analyte lists should be the Part 375 list of parameters. Please return cooler.	QUOTE #:

REQUESTED ANALYSIS

	DATE	TIME	COMPOSITE	GRAB	SAMPLE LOCATION/FIELD ID	MATRIX	CONTAINERS NUMBER	TCL VOCs + Stars	Full SVOCs 375	TAL metals	PCBs	Pesticides	TCN	CrC6	PCB CB	SSL 3/5			REMARKS	PARADIGM LAB SAMPLE NUMBER
1	3/3/14	10:20		X	GB-1 14-16'	Soil	2	X	X	X	X	X	X	X						
2	↓	12:35		X	GB-2 12-14'	Soil	2	X	X	X	X	X	X	X						
3		1455		X	GB-3 14-16'	Soil	2	X	X	X	X	X	X	X						
4	↓	1530		X	B-1 8.5-10'	Soil	2	X	X	X	X	X	X	X						
5																				
6																				
7																				
8																				
9																				
10																				

LAB USE ONLY BELOW THIS LINE

Sample Condition: Per NELAC/ELAP 210/241/242/243/244

Receipt Parameter	NELAC Compliance	
Container Type:	Y ☐	N ☐
Comments:		
Preservation:	Y ☐	N ☐
Comments:		
Holding Time:	Y ☐	N ☐
Comments:		
Temperature:	Y ☐	N ☐
Comments:		

Sampled By — Date/Time: 1530 / 3-3-14

Relinquished By — Date/Time: 16:30 / 3-3-14

Received By — Date/Time: 1121

Received @ Lab By — Date/Time: 3/5/14

Total Cost:

P.I.F.

Chain of Custody Supplement

Client: PVE **Completed by:** SSC

Lab Project ID: 140763 **Date:** 3/5/14

Sample Condition Requirements

Per NELAC/ELAP 210/241/242/243/244

NELAC compliance with the sample condition requirements upon receipt

Condition	Yes	No	N/A
Container Type	X	X 5035	
Comments			
Transferred to method-compliant container			X
Headspace (<1 mL)			X
Comments			
Preservation			X
Comments			
Chlorine Absent (<0.10 ppm per test strip)			X
Comments			
Holding Time	X		
Comments			
Temperature	X		X Metals
Comments	2°C iced		
Sufficient Sample Quantity	X		
Comments			

179 Lake Avenue, Rochester, NY 14608 Office (585) 647-2530 Fax (585) 647-3311

1 of 1

CHAIN OF CUSTODY

H2M: ELAP ID: 10478

PARADIGM ENVIRONMENTAL SERVICES

REPORT TO:		INVOICE TO:	
COMPANY:	Paradigm Environmental	COMPANY:	Same
ADDRESS:		ADDRESS:	
CITY: STATE: ZIP:		CITY: STATE: ZIP:	
PHONE: FAX:		PHONE: FAX:	
ATTN:	Kate Hansen	ATTN:	Meridith Dillman

LAB PROJECT #:

CLIENT PROJECT #:

PROJECT NAME/SITE NAME:

TURNAROUND TIME: (WORKING DAYS) STD: [ ]1 [ ]2 [ ]3 [X]5 OTHER: [ ]

COMMENTS: Please email results to khansen@paradigmenv.com and jdaloia@paradigmenv.com

Date Due: 3/13/14

REQUESTED ANALYSIS

	DATE	TIME	COMPOSITE	GRAB	SAMPLE LOCATION/FIELD ID	MATRIX	NUMBER OF CONTAINERS	Silver	Hex Cr	TCN	Pest							REMARKS	PARADIGM LAB SAMPLE NUMBER
1	3/3/14	1020			140763-01	Soil	1	X	X	X	X							1403320-001	
2		1235			-02		1	X	X	X	X							-002	
3		1455			-03		1	X	X	X	X							-003	
4		1530			-04		1	X	X	X	X							-004	
5																			
6																			
7																			
8																			
9																			
10																			

LAB USE ONLY BELOW THIS LINE

Sample Condition: Per NELAC/ELAP 210/241/242/243/244

Receipt Parameter	NELAC Compliance	
Container Type:	Y [ ]	N [ ]
Comments:		
Preservation:	Y [ ]	N [ ]
Comments:		
Holding Time:	Y [ ]	N [ ]
Comments:		
Temperature: 1.4°C	Y [ ]	N [ ]
Comments: PER H2M KRH 3/14/14		

Client

Sampled By	Date/Time	
[signature]	3/5/14	1600
Relinquished By	Date/Time	
[signature]	3/6	10.00
Received By	Date/Time	
Received @ Lab By	Date/Time	

Total Cost:

P.I.F.

PARADIGM
ENVIRONMENTAL SERVICES, INC.

Analytical Report For

PVE Sheffler

For Lab Project ID

140901

Referencing

500008 - McGuiness Blvd, Brooklyn

Prepared

Wednesday, March 19, 2014

Any noncompliant QC parameters or other notes impacting data interpretation are flagged or documented on the final report or are noted below.

Certifies that this report has been approved by the Technical Director or Designee

179 Lake Avenue • Rochester, NY 14608 • (585) 647-2530 • Fax (585) 647-3311 • ELAP ID# 10958

This report is part of a multipage document and should only be evaluated in its entirety. The Chain of Custody provides additional sample information, including compliance with the sample condition requirements upon receipt.

PARADIGM ENVIRONMENTAL SERVICES, INC.

Lab Project ID: 140901

Client: **PVE Sheffler**

Project Reference: 500008 - McGuiness Blvd, Brooklyn

Sample Identifier: MW-2
Lab Sample ID: 140901-01 **Date Sampled:** 3/12/2014
Matrix: Water **Date Received:** 3/14/2014

Part 375 Metals (ICP)

Analyte	Result	Units	Qualifier	Date Analyzed	
Arsenic	< 0.0100	mg/L		3/18/2014	16:24
Barium	< 0.100	mg/L		3/18/2014	16:24
Beryllium	< 0.00500	mg/L		3/18/2014	16:24
Cadmium	< 0.00500	mg/L		3/18/2014	16:24
Chromium	< 0.0100	mg/L		3/18/2014	16:24
Copper	< 0.0250	mg/L		3/18/2014	16:24
Lead	< 0.0100	mg/L		3/18/2014	16:24
Manganese	**2.43**	mg/L		3/18/2014	16:24
Nickel	< 0.0400	mg/L		3/18/2014	16:24
Selenium	< 0.0100	mg/L		3/18/2014	16:24
Silver	< 0.0100	mg/L		3/18/2014	16:24
Zinc	**0.0652**	mg/L		3/18/2014	16:24

Method Reference(s): EPA 6010C
EPA 3005
Data File: 031814b

Mercury

Analyte	Result	Units	Qualifier	Date Analyzed	
Mercury	< 0.000200	mg/L		3/18/2014	11:46

Method Reference(s): EPA 7470A
Data File: Hg140318A

PCBs

Analyte	Result	Units	Qualifier	Date Analyzed	
PCB-1016	< 0.100	ug/L		3/18/2014	16:39
PCB-1221	< 0.100	ug/L		3/18/2014	16:39
PCB-1232	< 0.100	ug/L		3/18/2014	16:39

This report is part of a multipage document and should only be evaluated in its entirety. The Chain of Custody provides additional sample information, including compliance with the sample condition requirements upon receipt.

PARADIGM ENVIRONMENTAL SERVICES, INC.

Lab Project ID: 140901

Client: **PVE Sheffler**

Project Reference: 500008 - McGuiness Blvd, Brooklyn

Sample Identifier: MW-2
Lab Sample ID: 140901-01 **Date Sampled:** 3/12/2014
Matrix: Water **Date Received:** 3/14/2014

PCB-1242	< 0.100	ug/L		3/18/2014	16:39
PCB-1248	< 0.100	ug/L		3/18/2014	16:39
PCB-1254	< 0.100	ug/L		3/18/2014	16:39
PCB-1260	< 0.100	ug/L		3/18/2014	16:39
PCB-1262	< 0.100	ug/L		3/18/2014	16:39
PCB-1268	< 0.100	ug/L		3/18/2014	16:39

Method Reference(s): EPA 8082A
EPA 3510C

Semi-Volatile Organics (Acid/Base Neutrals)

Analyte	Result	Units	Qualifier	Date Analyzed	
1,1-Biphenyl	< 10.0	ug/L		3/18/2014	12:33
1,2,4,5-Tetrachlorobenzene	< 10.0	ug/L		3/18/2014	12:33
1,2,4-Trichlorobenzene	< 10.0	ug/L		3/18/2014	12:33
1,2-Dichlorobenzene	< 10.0	ug/L		3/18/2014	12:33
1,3-Dichlorobenzene	< 10.0	ug/L		3/18/2014	12:33
1,4-Dichlorobenzene	< 10.0	ug/L	L	3/18/2014	12:33
2,3,4,6-Tetrachlorophenol	< 10.0	ug/L		3/18/2014	12:33
2,4,5-Trichlorophenol	< 20.0	ug/L		3/18/2014	12:33
2,4,6-Trichlorophenol	< 10.0	ug/L		3/18/2014	12:33
2,4-Dichlorophenol	< 10.0	ug/L		3/18/2014	12:33
2,4-Dimethylphenol	< 10.0	ug/L		3/18/2014	12:33
2,4-Dinitrophenol	< 20.0	ug/L		3/18/2014	12:33
2,4-Dinitrotoluene	< 10.0	ug/L		3/18/2014	12:33
2,6-Dinitrotoluene	< 10.0	ug/L		3/18/2014	12:33
2-Chloronaphthalene	< 10.0	ug/L		3/18/2014	12:33
2-Chlorophenol	< 10.0	ug/L		3/18/2014	12:33
2-Methylnapthalene	< 10.0	ug/L		3/18/2014	12:33
2-Methylphenol	< 10.0	ug/L		3/18/2014	12:33

This report is part of a multipage document and should only be evaluated in its entirety. The Chain of Custody provides additional sample information, including compliance with the sample condition requirements upon receipt.

PARADIGM ENVIRONMENTAL SERVICES, INC.

Lab Project ID: 140901

Client: **PVE Sheffler**

Project Reference: 500008 - McGuiness Blvd, Brooklyn

Sample Identifier: MW-2
Lab Sample ID: 140901-01 **Date Sampled:** 3/12/2014
Matrix: Water **Date Received:** 3/14/2014

2-Nitroaniline	< 20.0	ug/L	3/18/2014	12:33
2-Nitrophenol	< 10.0	ug/L	3/18/2014	12:33
3&4-Methylphenol	< 10.0	ug/L	3/18/2014	12:33
3,3'-Dichlorobenzidine	< 10.0	ug/L	3/18/2014	12:33
3-Nitroaniline	< 20.0	ug/L	3/18/2014	12:33
4,6-Dinitro-2-methylphenol	< 20.0	ug/L	3/18/2014	12:33
4-Bromophenyl phenyl ether	< 10.0	ug/L	3/18/2014	12:33
4-Chloro-3-methylphenol	< 10.0	ug/L	3/18/2014	12:33
4-Chloroaniline	< 10.0	ug/L	3/18/2014	12:33
4-Chlorophenyl phenyl ether	< 10.0	ug/L	3/18/2014	12:33
4-Nitroaniline	< 20.0	ug/L	3/18/2014	12:33
4-Nitrophenol	< 20.0	ug/L	3/18/2014	12:33
Acenaphthene	< 10.0	ug/L	3/18/2014	12:33
Acenaphthylene	< 10.0	ug/L	3/18/2014	12:33
Acetophenone	< 10.0	ug/L	3/18/2014	12:33
Anthracene	< 10.0	ug/L	3/18/2014	12:33
Atrazine	< 10.0	ug/L	3/18/2014	12:33
Benzaldehyde	< 10.0	ug/L	3/18/2014	12:33
Benzo (a) anthracene	< 10.0	ug/L	3/18/2014	12:33
Benzo (a) pyrene	< 10.0	ug/L	3/18/2014	12:33
Benzo (b) fluoranthene	< 10.0	ug/L	3/18/2014	12:33
Benzo (g,h,i) perylene	< 10.0	ug/L	3/18/2014	12:33
Benzo (k) fluoranthene	< 10.0	ug/L	3/18/2014	12:33
Bis (2-chloroethoxy) methane	< 10.0	ug/L	3/18/2014	12:33
Bis (2-chloroethyl) ether	< 10.0	ug/L	3/18/2014	12:33
Bis (2-chloroisopropyl) ether	< 10.0	ug/L	3/18/2014	12:33
Bis (2-ethylhexyl) phthalate	< 10.0	ug/L	3/18/2014	12:33
Butylbenzylphthalate	< 10.0	ug/L	3/18/2014	12:33

This report is part of a multipage document and should only be evaluated in its entirety. The Chain of Custody provides additional sample information, including compliance with the sample condition requirements upon receipt.

PARADIGM ENVIRONMENTAL SERVICES, INC.

Lab Project ID: 140901

Client: **PVE Sheffler**

Project Reference: 500008 - McGuiness Blvd, Brooklyn

Sample Identifier: MW-2
Lab Sample ID: 140901-01 **Date Sampled:** 3/12/2014
Matrix: Water **Date Received:** 3/14/2014

Caprolactam	< 10.0	ug/L	3/18/2014	12:33
Carbazole	< 10.0	ug/L	3/18/2014	12:33
Chrysene	< 10.0	ug/L	3/18/2014	12:33
Dibenz (a,h) anthracene	< 10.0	ug/L	3/18/2014	12:33
Dibenzofuran	< 10.0	ug/L	3/18/2014	12:33
Diethyl phthalate	< 10.0	ug/L	3/18/2014	12:33
Dimethyl phthalate	< 20.0	ug/L	3/18/2014	12:33
Di-n-butyl phthalate	< 10.0	ug/L	3/18/2014	12:33
Di-n-octylphthalate	< 10.0	ug/L	3/18/2014	12:33
Fluoranthene	< 10.0	ug/L	3/18/2014	12:33
Fluorene	< 10.0	ug/L	3/18/2014	12:33
Hexachlorobenzene	< 10.0	ug/L	3/18/2014	12:33
Hexachlorobutadiene	< 10.0	ug/L	3/18/2014	12:33
Hexachlorocyclopentadiene	< 10.0	ug/L	3/18/2014	12:33
Hexachloroethane	< 10.0	ug/L	3/18/2014	12:33
Indeno (1,2,3-cd) pyrene	< 10.0	ug/L	3/18/2014	12:33
Isophorone	< 10.0	ug/L	3/18/2014	12:33
Naphthalene	< 10.0	ug/L	3/18/2014	12:33
Nitrobenzene	< 10.0	ug/L	3/18/2014	12:33
N-Nitroso-di-n-propylamine	< 10.0	ug/L	3/18/2014	12:33
N-Nitrosodiphenylamine	< 10.0	ug/L	3/18/2014	12:33
Pentachlorophenol	< 20.0	ug/L	3/18/2014	12:33
Phenanthrene	< 10.0	ug/L	3/18/2014	12:33
Phenol	< 10.0	ug/L	3/18/2014	12:33
Pyrene	< 10.0	ug/L	3/18/2014	12:33

Method Reference(s): EPA 8270D
EPA 3510C
Data File: S75522.D

This report is part of a multipage document and should only be evaluated in its entirety. The Chain of Custody provides additional sample information, including compliance with the sample condition requirements upon receipt.

PARADIGM ENVIRONMENTAL SERVICES, INC.

Lab Project ID: 140901

Client: **PVE Sheffler**

Project Reference: 500008 - McGuiness Blvd, Brooklyn

Sample Identifier: MW-2
Lab Sample ID: 140901-01 **Date Sampled:** 3/12/2014
Matrix: Water **Date Received:** 3/14/2014

Chlorinated Pesticides

Analyte	Result	Units	Qualifier	Date Analyzed
4,4-DDD	<0.11	ug/L		3/17/2014
4,4-DDE	<0.10	ug/L		3/17/2014
4,4-DDT	<0.11	ug/L		3/17/2014
Aldrin	<0.10	ug/L		3/17/2014
alpha-BHC	<0.10	ug/L		3/17/2014
beta-BHC	<0.12	ug/L		3/17/2014
cis-Chlordane	<0.11	ug/L		3/17/2014
delta-BHC	<0.10	ug/L		3/17/2014
Dieldrin	<0.10	ug/L		3/17/2014
Endosulfan I	<0.12	ug/L		3/17/2014
Endosulfan II	<0.13	ug/L		3/17/2014
Endosulfan Sulfate	<0.15	ug/L		3/17/2014
Endrin	<0.12	ug/L		3/17/2014
Endrin Aldehyde	<0.12	ug/L		3/17/2014
Endrin Ketone	<0.14	ug/L		3/17/2014
gamma-BHC (Lindane)	<0.11	ug/L		3/17/2014
Heptachlor	<0.11	ug/L		3/17/2014
Heptachlor Epoxide	<0.11	ug/L		3/17/2014
Methoxychlor	<0.15	ug/L		3/17/2014
Toxaphene	<3.3	ug/L		3/17/2014
trans-Chlordane	<0.10	ug/L		3/17/2014

Method Reference(s): EPA 8081B
EPA 3510C
Subcontractor ELAP ID: 10142

This report is part of a multipage document and should only be evaluated in its entirety. The Chain of Custody provides additional sample information, including compliance with the sample condition requirements upon receipt.

PARADIGM ENVIRONMENTAL SERVICES, INC.

Lab Project ID: 140901

Client: **PVE Sheffler**

Project Reference: 500008 - McGuiness Blvd, Brooklyn

Sample Identifier: MW-2
Lab Sample ID: 140901-01 **Date Sampled:** 3/12/2014
Matrix: Water **Date Received:** 3/14/2014

Volatile Organics

Analyte	Result	Units	Qualifier	Date Analyzed	
1,1,1-Trichloroethane	< 2.00	ug/L		3/18/2014	14:16
1,1,2,2-Tetrachloroethane	< 2.00	ug/L		3/18/2014	14:16
1,1,2-Trichloroethane	< 2.00	ug/L		3/18/2014	14:16
1,1-Dichloroethane	< 2.00	ug/L		3/18/2014	14:16
1,1-Dichloroethene	< 2.00	ug/L		3/18/2014	14:16
1,2,3-Trichlorobenzene	< 5.00	ug/L		3/18/2014	14:16
1,2,4-Trichlorobenzene	< 5.00	ug/L		3/18/2014	14:16
1,2,4-Trimethylbenzene	< 2.00	ug/L		3/18/2014	14:16
1,2-Dibromo-3-Chloropropane	< 10.0	ug/L		3/18/2014	14:16
1,2-Dibromoethane	< 2.00	ug/L		3/18/2014	14:16
1,2-Dichlorobenzene	< 2.00	ug/L		3/18/2014	14:16
1,2-Dichloroethane	< 2.00	ug/L		3/18/2014	14:16
1,2-Dichloropropane	< 2.00	ug/L		3/18/2014	14:16
1,3,5-Trimethylbenzene	< 2.00	ug/L		3/18/2014	14:16
1,3-Dichlorobenzene	< 2.00	ug/L		3/18/2014	14:16
1,4-Dichlorobenzene	< 2.00	ug/L		3/18/2014	14:16
1,4-dioxane	< 20.0	ug/L		3/18/2014	14:16
2-Butanone	< 10.0	ug/L		3/18/2014	14:16
2-Hexanone	< 5.00	ug/L		3/18/2014	14:16
4-Methyl-2-pentanone	< 5.00	ug/L		3/18/2014	14:16
Acetone	< 10.0	ug/L		3/18/2014	14:16
Benzene	< 0.700	ug/L		3/18/2014	14:16
Bromochloromethane	< 5.00	ug/L		3/18/2014	14:16
Bromodichloromethane	< 2.00	ug/L		3/18/2014	14:16
Bromoform	< 5.00	ug/L		3/18/2014	14:16
Bromomethane	< 2.00	ug/L		3/18/2014	14:16

This report is part of a multipage document and should only be evaluated in its entirety. The Chain of Custody provides additional sample information, including compliance with the sample condition requirements upon receipt.

PARADIGM ENVIRONMENTAL SERVICES, INC.

Lab Project ID: 140901

Client: **PVE Sheffler**

Project Reference: 500008 - McGuiness Blvd, Brooklyn

Sample Identifier: MW-2
Lab Sample ID: 140901-01 **Date Sampled:** 3/12/2014
Matrix: Water **Date Received:** 3/14/2014

Carbon disulfide	< 2.00	ug/L	3/18/2014	14:16
Carbon Tetrachloride	< 2.00	ug/L	3/18/2014	14:16
Chlorobenzene	< 2.00	ug/L	3/18/2014	14:16
Chloroethane	< 2.00	ug/L	3/18/2014	14:16
Chloroform	< 2.00	ug/L	3/18/2014	14:16
Chloromethane	< 2.00	ug/L	3/18/2014	14:16
cis-1,2-Dichloroethene	< 2.00	ug/L	3/18/2014	14:16
cis-1,3-Dichloropropene	< 2.00	ug/L	3/18/2014	14:16
Cyclohexane	< 10.0	ug/L	3/18/2014	14:16
Dibromochloromethane	< 2.00	ug/L	3/18/2014	14:16
Dichlorodifluoromethane	< 2.00	ug/L	3/18/2014	14:16
Ethylbenzene	< 2.00	ug/L	3/18/2014	14:16
Freon 113	< 2.00	ug/L	3/18/2014	14:16
Isopropylbenzene	< 2.00	ug/L	3/18/2014	14:16
m,p-Xylene	< 2.00	ug/L	3/18/2014	14:16
Methyl acetate	< 2.00	ug/L	3/18/2014	14:16
Methyl tert-butyl Ether	< 2.00	ug/L	3/18/2014	14:16
Methylcyclohexane	< 2.00	ug/L	3/18/2014	14:16
Methylene chloride	< 5.00	ug/L	3/18/2014	14:16
Naphthalene	< 5.00	ug/L	3/18/2014	14:16
n-Butylbenzene	< 2.00	ug/L	3/18/2014	14:16
n-Propylbenzene	< 2.00	ug/L	3/18/2014	14:16
o-Xylene	< 2.00	ug/L	3/18/2014	14:16
p-Isopropyltoluene	< 2.00	ug/L	3/18/2014	14:16
sec-Butylbenzene	< 2.00	ug/L	3/18/2014	14:16
Styrene	< 5.00	ug/L	3/18/2014	14:16
tert-Butylbenzene	< 2.00	ug/L	3/18/2014	14:16
Tetrachloroethene	< 2.00	ug/L	3/18/2014	14:16

This report is part of a multipage document and should only be evaluated in its entirety. The Chain of Custody provides additional sample information, including compliance with the sample condition requirements upon receipt.

PARADIGM ENVIRONMENTAL SERVICES, INC.

Lab Project ID: 140901

Client: **PVE Sheffler**

Project Reference: 500008 - McGuiness Blvd, Brooklyn

Sample Identifier: MW-2
Lab Sample ID: 140901-01 **Date Sampled:** 3/12/2014
Matrix: Water **Date Received:** 3/14/2014

Toluene	< 2.00	ug/L	3/18/2014	14:16
trans-1,2-Dichloroethene	< 2.00	ug/L	3/18/2014	14:16
trans-1,3-Dichloropropene	< 2.00	ug/L	3/18/2014	14:16
Trichloroethene	< 2.00	ug/L	3/18/2014	14:16
Trichlorofluoromethane	< 2.00	ug/L	3/18/2014	14:16
Vinyl chloride	< 2.00	ug/L	3/18/2014	14:16

Method Reference(s): EPA 8260C
EPA 5030
Data File: x11878.D

This report is part of a multipage document and should only be evaluated in its entirety. The Chain of Custody provides additional sample information, including compliance with the sample condition requirements upon receipt.

PARADIGM ENVIRONMENTAL SERVICES, INC.

Lab Project ID: 140901

Client: **PVE Sheffler**

Project Reference: 500008 - McGuiness Blvd, Brooklyn

Sample Identifier: MW-3
Lab Sample ID: 140901-02 **Date Sampled:** 3/12/2014
Matrix: Water **Date Received:** 3/14/2014

Part 375 Metals (ICP)

Analyte	Result	Units	Qualifier	Date Analyzed	
Arsenic	**0.0153**	mg/L		3/18/2014	16:28
Barium	**0.118**	mg/L		3/18/2014	16:28
Beryllium	< 0.00500	mg/L		3/18/2014	16:28
Cadmium	< 0.00500	mg/L		3/18/2014	16:28
Chromium	< 0.0100	mg/L		3/18/2014	16:28
Copper	< 0.0250	mg/L		3/18/2014	16:28
Lead	< 0.0100	mg/L		3/18/2014	16:28
Manganese	**1.36**	mg/L		3/18/2014	16:28
Nickel	< 0.0400	mg/L		3/18/2014	16:28
Selenium	< 0.0100	mg/L		3/18/2014	16:28
Silver	< 0.0100	mg/L		3/18/2014	16:28
Zinc	< 0.0600	mg/L		3/18/2014	16:28

Method Reference(s): EPA 6010C
EPA 3005
Data File: 031814b

Mercury

Analyte	Result	Units	Qualifier	Date Analyzed	
Mercury	< 0.000200	mg/L		3/18/2014	11:49

Method Reference(s): EPA 7470A
Data File: Hg140318A

PCBs

Analyte	Result	Units	Qualifier	Date Analyzed	
PCB-1016	< 0.100	ug/L		3/18/2014	17:02
PCB-1221	< 0.100	ug/L		3/18/2014	17:02
PCB-1232	< 0.100	ug/L		3/18/2014	17:02

This report is part of a multipage document and should only be evaluated in its entirety. The Chain of Custody provides additional sample information, including compliance with the sample condition requirements upon receipt.

PARADIGM ENVIRONMENTAL SERVICES, INC.

Lab Project ID: 140901

Client: **PVE Sheffler**

Project Reference: 500008 - McGuiness Blvd, Brooklyn

Sample Identifier: MW-3
Lab Sample ID: 140901-02 **Date Sampled:** 3/12/2014
Matrix: Water **Date Received:** 3/14/2014

PCB-1242	< 0.100	ug/L		3/18/2014	17:02
PCB-1248	< 0.100	ug/L		3/18/2014	17:02
PCB-1254	< 0.100	ug/L		3/18/2014	17:02
PCB-1260	< 0.100	ug/L		3/18/2014	17:02
PCB-1262	< 0.100	ug/L		3/18/2014	17:02
PCB-1268	< 0.100	ug/L		3/18/2014	17:02

Method Reference(s): EPA 8082A
EPA 3510C

Semi-Volatile Organics (Acid/Base Neutrals)

Analyte	Result	Units	Qualifier	Date Analyzed	
1,1-Biphenyl	< 10.0	ug/L		3/18/2014	13:05
1,2,4,5-Tetrachlorobenzene	< 10.0	ug/L		3/18/2014	13:05
1,2,4-Trichlorobenzene	< 10.0	ug/L		3/18/2014	13:05
1,2-Dichlorobenzene	< 10.0	ug/L		3/18/2014	13:05
1,3-Dichlorobenzene	< 10.0	ug/L		3/18/2014	13:05
1,4-Dichlorobenzene	< 10.0	ug/L	L	3/18/2014	13:05
2,3,4,6-Tetrachlorophenol	< 10.0	ug/L		3/18/2014	13:05
2,4,5-Trichlorophenol	< 20.0	ug/L		3/18/2014	13:05
2,4,6-Trichlorophenol	< 10.0	ug/L		3/18/2014	13:05
2,4-Dichlorophenol	< 10.0	ug/L		3/18/2014	13:05
2,4-Dimethylphenol	< 10.0	ug/L		3/18/2014	13:05
2,4-Dinitrophenol	< 20.0	ug/L		3/18/2014	13:05
2,4-Dinitrotoluene	< 10.0	ug/L		3/18/2014	13:05
2,6-Dinitrotoluene	< 10.0	ug/L		3/18/2014	13:05
2-Chloronaphthalene	< 10.0	ug/L		3/18/2014	13:05
2-Chlorophenol	< 10.0	ug/L		3/18/2014	13:05
2-Methylnapthalene	< 10.0	ug/L		3/18/2014	13:05
2-Methylphenol	< 10.0	ug/L		3/18/2014	13:05

This report is part of a multipage document and should only be evaluated in its entirety. The Chain of Custody provides additional sample information, including compliance with the sample condition requirements upon receipt.

PARADIGM ENVIRONMENTAL SERVICES, INC.

Lab Project ID: 140901

Client: **PVE Sheffler**

Project Reference: 500008 - McGuiness Blvd, Brooklyn

Sample Identifier: MW-3
Lab Sample ID: 140901-02 **Date Sampled:** 3/12/2014
Matrix: Water **Date Received:** 3/14/2014

2-Nitroaniline	< 20.0	ug/L	3/18/2014	13:05
2-Nitrophenol	< 10.0	ug/L	3/18/2014	13:05
3&4-Methylphenol	< 10.0	ug/L	3/18/2014	13:05
3,3'-Dichlorobenzidine	< 10.0	ug/L	3/18/2014	13:05
3-Nitroaniline	< 20.0	ug/L	3/18/2014	13:05
4,6-Dinitro-2-methylphenol	< 20.0	ug/L	3/18/2014	13:05
4-Bromophenyl phenyl ether	< 10.0	ug/L	3/18/2014	13:05
4-Chloro-3-methylphenol	< 10.0	ug/L	3/18/2014	13:05
4-Chloroaniline	< 10.0	ug/L	3/18/2014	13:05
4-Chlorophenyl phenyl ether	< 10.0	ug/L	3/18/2014	13:05
4-Nitroaniline	< 20.0	ug/L	3/18/2014	13:05
4-Nitrophenol	< 20.0	ug/L	3/18/2014	13:05
Acenaphthene	< 10.0	ug/L	3/18/2014	13:05
Acenaphthylene	< 10.0	ug/L	3/18/2014	13:05
Acetophenone	< 10.0	ug/L	3/18/2014	13:05
Anthracene	< 10.0	ug/L	3/18/2014	13:05
Atrazine	< 10.0	ug/L	3/18/2014	13:05
Benzaldehyde	< 10.0	ug/L	3/18/2014	13:05
Benzo (a) anthracene	< 10.0	ug/L	3/18/2014	13:05
Benzo (a) pyrene	< 10.0	ug/L	3/18/2014	13:05
Benzo (b) fluoranthene	< 10.0	ug/L	3/18/2014	13:05
Benzo (g,h,i) perylene	< 10.0	ug/L	3/18/2014	13:05
Benzo (k) fluoranthene	< 10.0	ug/L	3/18/2014	13:05
Bis (2-chloroethoxy) methane	< 10.0	ug/L	3/18/2014	13:05
Bis (2-chloroethyl) ether	< 10.0	ug/L	3/18/2014	13:05
Bis (2-chloroisopropyl) ether	< 10.0	ug/L	3/18/2014	13:05
Bis (2-ethylhexyl) phthalate	< 10.0	ug/L	3/18/2014	13:05
Butylbenzylphthalate	< 10.0	ug/L	3/18/2014	13:05

This report is part of a multipage document and should only be evaluated in its entirety. The Chain of Custody provides additional sample information, including compliance with the sample condition requirements upon receipt.

PARADIGM ENVIRONMENTAL SERVICES, INC.

Lab Project ID: 140901

Client: **PVE Sheffler**

Project Reference: 500008 - McGuiness Blvd, Brooklyn

Sample Identifier: MW-3
Lab Sample ID: 140901-02 **Date Sampled:** 3/12/2014
Matrix: Water **Date Received:** 3/14/2014

Caprolactam	< 10.0	ug/L	3/18/2014	13:05
Carbazole	< 10.0	ug/L	3/18/2014	13:05
Chrysene	< 10.0	ug/L	3/18/2014	13:05
Dibenz (a,h) anthracene	< 10.0	ug/L	3/18/2014	13:05
Dibenzofuran	< 10.0	ug/L	3/18/2014	13:05
Diethyl phthalate	< 10.0	ug/L	3/18/2014	13:05
Dimethyl phthalate	< 20.0	ug/L	3/18/2014	13:05
Di-n-butyl phthalate	< 10.0	ug/L	3/18/2014	13:05
Di-n-octylphthalate	< 10.0	ug/L	3/18/2014	13:05
Fluoranthene	< 10.0	ug/L	3/18/2014	13:05
Fluorene	< 10.0	ug/L	3/18/2014	13:05
Hexachlorobenzene	< 10.0	ug/L	3/18/2014	13:05
Hexachlorobutadiene	< 10.0	ug/L	3/18/2014	13:05
Hexachlorocyclopentadiene	< 10.0	ug/L	3/18/2014	13:05
Hexachloroethane	< 10.0	ug/L	3/18/2014	13:05
Indeno (1,2,3-cd) pyrene	< 10.0	ug/L	3/18/2014	13:05
Isophorone	< 10.0	ug/L	3/18/2014	13:05
Naphthalene	< 10.0	ug/L	3/18/2014	13:05
Nitrobenzene	< 10.0	ug/L	3/18/2014	13:05
N-Nitroso-di-n-propylamine	< 10.0	ug/L	3/18/2014	13:05
N-Nitrosodiphenylamine	< 10.0	ug/L	3/18/2014	13:05
Pentachlorophenol	< 20.0	ug/L	3/18/2014	13:05
Phenanthrene	< 10.0	ug/L	3/18/2014	13:05
Phenol	< 10.0	ug/L	3/18/2014	13:05
Pyrene	< 10.0	ug/L	3/18/2014	13:05

Surrogate outlier

Method Reference(s): EPA 8270D
EPA 3510C
Data File: S75523.D

This report is part of a multipage document and should only be evaluated in its entirety. The Chain of Custody provides additional sample information, including compliance with the sample condition requirements upon receipt.

PARADIGM ENVIRONMENTAL SERVICES, INC.

Lab Project ID: 140901

Client: **PVE Sheffler**

Project Reference: 500008 - McGuiness Blvd, Brooklyn

Sample Identifier: MW-3
Lab Sample ID: 140901-02 **Date Sampled:** 3/12/2014
Matrix: Water **Date Received:** 3/14/2014

Chlorinated Pesticides

Analyte	Result	Units	Qualifier	Date Analyzed
4,4-DDD	<0.11	ug/L		3/17/2014
4,4-DDE	<0.11	ug/L		3/17/2014
4,4-DDT	<0.12	ug/L		3/17/2014
Aldrin	<0.10	ug/L		3/17/2014
alpha-BHC	<0.10	ug/L		3/17/2014
beta-BHC	<0.13	ug/L		3/17/2014
cis-Chlordane	<0.12	ug/L		3/17/2014
delta-BHC	<0.11	ug/L		3/17/2014
Dieldrin	<0.11	ug/L		3/17/2014
Endosulfan I	<0.13	ug/L		3/17/2014
Endosulfan II	<0.13	ug/L		3/17/2014
Endosulfan Sulfate	<0.16	ug/L		3/17/2014
Endrin	<0.12	ug/L		3/17/2014
Endrin Aldehyde	<0.12	ug/L		3/17/2014
Endrin Ketone	<0.14	ug/L		3/17/2014
gamma-BHC (Lindane)	<0.11	ug/L		3/17/2014
Heptachlor	<0.11	ug/L		3/17/2014
Heptachlor Epoxide	<0.11	ug/L		3/17/2014
Methoxychlor	<0.16	ug/L		3/17/2014
Toxaphene	<3.4	ug/L		3/17/2014
trans-Chlordane	<0.11	ug/L		3/17/2014

Method Reference(s): EPA 8081B
EPA 3510C
Subcontractor ELAP ID: 10142

This report is part of a multipage document and should only be evaluated in its entirety. The Chain of Custody provides additional sample information, including compliance with the sample condition requirements upon receipt.

PARADIGM ENVIRONMENTAL SERVICES, INC.

Lab Project ID: 140901

Client: **PVE Sheffler**

Project Reference: 500008 - McGuiness Blvd, Brooklyn

Sample Identifier: MW-3
Lab Sample ID: 140901-02 **Date Sampled:** 3/12/2014
Matrix: Water **Date Received:** 3/14/2014

Volatile Organics

Analyte	Result	Units	Qualifier	Date Analyzed	
1,1,1-Trichloroethane	< 2.00	ug/L		3/17/2014	17:49
1,1,2,2-Tetrachloroethane	< 2.00	ug/L		3/17/2014	17:49
1,1,2-Trichloroethane	< 2.00	ug/L		3/17/2014	17:49
1,1-Dichloroethane	< 2.00	ug/L		3/17/2014	17:49
1,1-Dichloroethene	< 2.00	ug/L		3/17/2014	17:49
1,2,3-Trichlorobenzene	< 5.00	ug/L		3/17/2014	17:49
1,2,4-Trichlorobenzene	< 5.00	ug/L		3/17/2014	17:49
1,2,4-Trimethylbenzene	< 2.00	ug/L		3/17/2014	17:49
1,2-Dibromo-3-Chloropropane	< 10.0	ug/L		3/17/2014	17:49
1,2-Dibromoethane	< 2.00	ug/L		3/17/2014	17:49
1,2-Dichlorobenzene	< 2.00	ug/L		3/17/2014	17:49
1,2-Dichloroethane	< 2.00	ug/L		3/17/2014	17:49
1,2-Dichloropropane	< 2.00	ug/L		3/17/2014	17:49
1,3,5-Trimethylbenzene	< 2.00	ug/L		3/17/2014	17:49
1,3-Dichlorobenzene	< 2.00	ug/L		3/17/2014	17:49
1,4-Dichlorobenzene	< 2.00	ug/L		3/17/2014	17:49
1,4-dioxane	< 20.0	ug/L		3/17/2014	17:49
2-Butanone	< 10.0	ug/L		3/17/2014	17:49
2-Hexanone	< 5.00	ug/L		3/17/2014	17:49
4-Methyl-2-pentanone	< 5.00	ug/L		3/17/2014	17:49
Acetone	< 10.0	ug/L		3/17/2014	17:49
Benzene	< 0.700	ug/L		3/17/2014	17:49
Bromochloromethane	< 5.00	ug/L		3/17/2014	17:49
Bromodichloromethane	< 2.00	ug/L		3/17/2014	17:49
Bromoform	< 5.00	ug/L		3/17/2014	17:49
Bromomethane	< 2.00	ug/L		3/17/2014	17:49

This report is part of a multipage document and should only be evaluated in its entirety. The Chain of Custody provides additional sample information, including compliance with the sample condition requirements upon receipt.

PARADIGM ENVIRONMENTAL SERVICES, INC.

Lab Project ID: 140901

Client: **PVE Sheffler**

Project Reference: 500008 - McGuiness Blvd, Brooklyn

Sample Identifier: MW-3
Lab Sample ID: 140901-02 **Date Sampled:** 3/12/2014
Matrix: Water **Date Received:** 3/14/2014

Carbon disulfide	< 2.00	ug/L	3/17/2014	17:49
Carbon Tetrachloride	< 2.00	ug/L	3/17/2014	17:49
Chlorobenzene	< 2.00	ug/L	3/17/2014	17:49
Chloroethane	< 2.00	ug/L	3/17/2014	17:49
Chloroform	< 2.00	ug/L	3/17/2014	17:49
Chloromethane	< 2.00	ug/L	3/17/2014	17:49
cis-1,2-Dichloroethene	< 2.00	ug/L	3/17/2014	17:49
cis-1,3-Dichloropropene	< 2.00	ug/L	3/17/2014	17:49
Cyclohexane	< 10.0	ug/L	3/17/2014	17:49
Dibromochloromethane	< 2.00	ug/L	3/17/2014	17:49
Dichlorodifluoromethane	< 2.00	ug/L	3/17/2014	17:49
Ethylbenzene	< 2.00	ug/L	3/17/2014	17:49
Freon 113	< 2.00	ug/L	3/17/2014	17:49
Isopropylbenzene	< 2.00	ug/L	3/17/2014	17:49
m,p-Xylene	< 2.00	ug/L	3/17/2014	17:49
Methyl acetate	< 2.00	ug/L	3/17/2014	17:49
Methyl tert-butyl Ether	< 2.00	ug/L	3/17/2014	17:49
Methylcyclohexane	< 2.00	ug/L	3/17/2014	17:49
Methylene chloride	< 5.00	ug/L	3/17/2014	17:49
Naphthalene	< 5.00	ug/L	3/17/2014	17:49
n-Butylbenzene	< 2.00	ug/L	3/17/2014	17:49
n-Propylbenzene	< 2.00	ug/L	3/17/2014	17:49
o-Xylene	< 2.00	ug/L	3/17/2014	17:49
p-Isopropyltoluene	< 2.00	ug/L	3/17/2014	17:49
sec-Butylbenzene	< 2.00	ug/L	3/17/2014	17:49
Styrene	< 5.00	ug/L	3/17/2014	17:49
tert-Butylbenzene	< 2.00	ug/L	3/17/2014	17:49
Tetrachloroethene	< 2.00	ug/L	3/17/2014	17:49

This report is part of a multipage document and should only be evaluated in its entirety. The Chain of Custody provides additional sample information, including compliance with the sample condition requirements upon receipt.

PARADIGM ENVIRONMENTAL SERVICES, INC.

Lab Project ID: 140901

Client: **PVE Sheffler**

Project Reference: 500008 - McGuiness Blvd, Brooklyn

Sample Identifier: MW-3
Lab Sample ID: 140901-02 **Date Sampled:** 3/12/2014
Matrix: Water **Date Received:** 3/14/2014

Toluene	< 2.00	ug/L	3/17/2014	17:49
trans-1,2-Dichloroethene	< 2.00	ug/L	3/17/2014	17:49
trans-1,3-Dichloropropene	< 2.00	ug/L	3/17/2014	17:49
Trichloroethene	< 2.00	ug/L	3/17/2014	17:49
Trichlorofluoromethane	< 2.00	ug/L	3/17/2014	17:49
Vinyl chloride	< 2.00	ug/L	3/17/2014	17:49

Method Reference(s): EPA 8260C
EPA 5030
Data File: X11854.D

This report is part of a multipage document and should only be evaluated in its entirety. The Chain of Custody provides additional sample information, including compliance with the sample condition requirements upon receipt.

PARADIGM ENVIRONMENTAL SERVICES, INC.

Lab Project ID: 140901

Client: **PVE Sheffler**

Project Reference: 500008 - McGuiness Blvd, Brooklyn

Sample Identifier: MW-1
Lab Sample ID: 140901-03 **Date Sampled:** 3/12/2014
Matrix: Water **Date Received:** 3/14/2014

Part 375 Metals (ICP)

Analyte	Result	Units	Qualifier	Date Analyzed	
Arsenic	**0.0126**	mg/L		3/18/2014	16:33
Barium	**0.155**	mg/L		3/18/2014	16:33
Beryllium	< 0.00500	mg/L		3/18/2014	16:33
Cadmium	< 0.00500	mg/L		3/18/2014	16:33
Chromium	< 0.0100	mg/L		3/18/2014	16:33
Copper	< 0.0250	mg/L		3/18/2014	16:33
Lead	< 0.0100	mg/L		3/18/2014	16:33
Manganese	**4.44**	mg/L		3/18/2014	16:33
Nickel	< 0.0400	mg/L		3/18/2014	16:33
Selenium	< 0.0100	mg/L		3/18/2014	16:33
Silver	< 0.0100	mg/L		3/18/2014	16:33
Zinc	< 0.0600	mg/L		3/18/2014	16:33

Method Reference(s): EPA 6010C
EPA 3005
Data File: 031814b

Mercury

Analyte	Result	Units	Qualifier	Date Analyzed	
Mercury	< 0.000200	mg/L		3/18/2014	11:58

Method Reference(s): EPA 7470A
Data File: Hg140318A

PCBs

Analyte	Result	Units	Qualifier	Date Analyzed	
PCB-1016	< 0.100	ug/L		3/18/2014	17:25
PCB-1221	< 0.100	ug/L		3/18/2014	17:25
PCB-1232	< 0.100	ug/L		3/18/2014	17:25

This report is part of a multipage document and should only be evaluated in its entirety. The Chain of Custody provides additional sample information, including compliance with the sample condition requirements upon receipt.

PARADIGM ENVIRONMENTAL SERVICES, INC.

Lab Project ID: 140901

Client: **PVE Sheffler**

Project Reference: 500008 - McGuiness Blvd, Brooklyn

Sample Identifier: MW-1
Lab Sample ID: 140901-03 **Date Sampled:** 3/12/2014
Matrix: Water **Date Received:** 3/14/2014

PCB-1242	< 0.100	ug/L		3/18/2014	17:25
PCB-1248	< 0.100	ug/L		3/18/2014	17:25
PCB-1254	< 0.100	ug/L		3/18/2014	17:25
PCB-1260	< 0.100	ug/L		3/18/2014	17:25
PCB-1262	< 0.100	ug/L		3/18/2014	17:25
PCB-1268	< 0.100	ug/L		3/18/2014	17:25

Method Reference(s): EPA 8082A
EPA 3510C

Semi-Volatile Organics (Acid/Base Neutrals)

Analyte	Result	Units	Qualifier	Date Analyzed	
1,1-Biphenyl	< 10.0	ug/L		3/18/2014	14:43
1,2,4,5-Tetrachlorobenzene	< 10.0	ug/L		3/18/2014	14:43
1,2,4-Trichlorobenzene	< 10.0	ug/L		3/18/2014	14:43
1,2-Dichlorobenzene	< 10.0	ug/L		3/18/2014	14:43
1,3-Dichlorobenzene	< 10.0	ug/L		3/18/2014	14:43
1,4-Dichlorobenzene	< 10.0	ug/L	L	3/18/2014	14:43
2,3,4,6-Tetrachlorophenol	< 10.0	ug/L		3/18/2014	14:43
2,4,5-Trichlorophenol	< 20.0	ug/L		3/18/2014	14:43
2,4,6-Trichlorophenol	< 10.0	ug/L		3/18/2014	14:43
2,4-Dichlorophenol	< 10.0	ug/L		3/18/2014	14:43
2,4-Dimethylphenol	< 10.0	ug/L		3/18/2014	14:43
2,4-Dinitrophenol	< 20.0	ug/L		3/18/2014	14:43
2,4-Dinitrotoluene	< 10.0	ug/L		3/18/2014	14:43
2,6-Dinitrotoluene	< 10.0	ug/L		3/18/2014	14:43
2-Chloronaphthalene	< 10.0	ug/L		3/18/2014	14:43
2-Chlorophenol	< 10.0	ug/L		3/18/2014	14:43
2-Methylnapthalene	< 10.0	ug/L		3/18/2014	14:43
2-Methylphenol	< 10.0	ug/L		3/18/2014	14:43

This report is part of a multipage document and should only be evaluated in its entirety. The Chain of Custody provides additional sample information, including compliance with the sample condition requirements upon receipt.

PARADIGM ENVIRONMENTAL SERVICES, INC.

Lab Project ID: 140901

Client: **PVE Sheffler**

Project Reference: 500008 - McGuiness Blvd, Brooklyn

Sample Identifier: MW-1
Lab Sample ID: 140901-03 **Date Sampled:** 3/12/2014
Matrix: Water **Date Received:** 3/14/2014

2-Nitroaniline	< 20.0	ug/L	3/18/2014	14:43
2-Nitrophenol	< 10.0	ug/L	3/18/2014	14:43
3&4-Methylphenol	< 10.0	ug/L	3/18/2014	14:43
3,3'-Dichlorobenzidine	< 10.0	ug/L	3/18/2014	14:43
3-Nitroaniline	< 20.0	ug/L	3/18/2014	14:43
4,6-Dinitro-2-methylphenol	< 20.0	ug/L	3/18/2014	14:43
4-Bromophenyl phenyl ether	< 10.0	ug/L	3/18/2014	14:43
4-Chloro-3-methylphenol	< 10.0	ug/L	3/18/2014	14:43
4-Chloroaniline	< 10.0	ug/L	3/18/2014	14:43
4-Chlorophenyl phenyl ether	< 10.0	ug/L	3/18/2014	14:43
4-Nitroaniline	< 20.0	ug/L	3/18/2014	14:43
4-Nitrophenol	< 20.0	ug/L	3/18/2014	14:43
Acenaphthene	< 10.0	ug/L	3/18/2014	14:43
Acenaphthylene	< 10.0	ug/L	3/18/2014	14:43
Acetophenone	< 10.0	ug/L	3/18/2014	14:43
Anthracene	< 10.0	ug/L	3/18/2014	14:43
Atrazine	< 10.0	ug/L	3/18/2014	14:43
Benzaldehyde	< 10.0	ug/L	3/18/2014	14:43
Benzo (a) anthracene	< 10.0	ug/L	3/18/2014	14:43
Benzo (a) pyrene	< 10.0	ug/L	3/18/2014	14:43
Benzo (b) fluoranthene	< 10.0	ug/L	3/18/2014	14:43
Benzo (g,h,i) perylene	< 10.0	ug/L	3/18/2014	14:43
Benzo (k) fluoranthene	< 10.0	ug/L	3/18/2014	14:43
Bis (2-chloroethoxy) methane	< 10.0	ug/L	3/18/2014	14:43
Bis (2-chloroethyl) ether	< 10.0	ug/L	3/18/2014	14:43
Bis (2-chloroisopropyl) ether	< 10.0	ug/L	3/18/2014	14:43
Bis (2-ethylhexyl) phthalate	< 10.0	ug/L	3/18/2014	14:43
Butylbenzylphthalate	< 10.0	ug/L	3/18/2014	14:43

This report is part of a multipage document and should only be evaluated in its entirety. The Chain of Custody provides additional sample information, including compliance with the sample condition requirements upon receipt.

PARADIGM ENVIRONMENTAL SERVICES, INC.

Lab Project ID: 140901

Client: **PVE Sheffler**

Project Reference: 500008 - McGuiness Blvd, Brooklyn

Sample Identifier: MW-1
Lab Sample ID: 140901-03 **Date Sampled:** 3/12/2014
Matrix: Water **Date Received:** 3/14/2014

Caprolactam	< 10.0	ug/L	3/18/2014	14:43
Carbazole	< 10.0	ug/L	3/18/2014	14:43
Chrysene	< 10.0	ug/L	3/18/2014	14:43
Dibenz (a,h) anthracene	< 10.0	ug/L	3/18/2014	14:43
Dibenzofuran	< 10.0	ug/L	3/18/2014	14:43
Diethyl phthalate	< 10.0	ug/L	3/18/2014	14:43
Dimethyl phthalate	< 20.0	ug/L	3/18/2014	14:43
Di-n-butyl phthalate	< 10.0	ug/L	3/18/2014	14:43
Di-n-octylphthalate	< 10.0	ug/L	3/18/2014	14:43
Fluoranthene	< 10.0	ug/L	3/18/2014	14:43
Fluorene	< 10.0	ug/L	3/18/2014	14:43
Hexachlorobenzene	< 10.0	ug/L	3/18/2014	14:43
Hexachlorobutadiene	< 10.0	ug/L	3/18/2014	14:43
Hexachlorocyclopentadiene	< 10.0	ug/L	3/18/2014	14:43
Hexachloroethane	< 10.0	ug/L	3/18/2014	14:43
Indeno (1,2,3-cd) pyrene	< 10.0	ug/L	3/18/2014	14:43
Isophorone	< 10.0	ug/L	3/18/2014	14:43
Naphthalene	< 10.0	ug/L	3/18/2014	14:43
Nitrobenzene	< 10.0	ug/L	3/18/2014	14:43
N-Nitroso-di-n-propylamine	< 10.0	ug/L	3/18/2014	14:43
N-Nitrosodiphenylamine	< 10.0	ug/L	3/18/2014	14:43
Pentachlorophenol	< 20.0	ug/L	3/18/2014	14:43
Phenanthrene	< 10.0	ug/L	3/18/2014	14:43
Phenol	< 10.0	ug/L	3/18/2014	14:43
Pyrene	< 10.0	ug/L	3/18/2014	14:43

Method Reference(s): EPA 8270D
EPA 3510C
Data File: S75526.D

This report is part of a multipage document and should only be evaluated in its entirety. The Chain of Custody provides additional sample information, including compliance with the sample condition requirements upon receipt.

PARADIGM ENVIRONMENTAL SERVICES, INC.

Lab Project ID: 140901

Client: **PVE Sheffler**

Project Reference: 500008 - McGuiness Blvd, Brooklyn

Sample Identifier: MW-1
Lab Sample ID: 140901-03 **Date Sampled:** 3/12/2014
Matrix: Water **Date Received:** 3/14/2014

Chlorinated Pesticides

Analyte	Result	Units	Qualifier	Date Analyzed
4,4-DDD	<0.11	ug/L		3/17/2014
4,4-DDE	<0.10	ug/L		3/17/2014
4,4-DDT	<0.11	ug/L		3/17/2014
Aldrin	<0.10	ug/L		3/17/2014
alpha-BHC	<0.10	ug/L		3/17/2014
beta-BHC	<0.12	ug/L		3/17/2014
cis-Chlordane	<0.11	ug/L		3/17/2014
delta-BHC	<0.10	ug/L		3/17/2014
Dieldrin	<0.10	ug/L		3/17/2014
Endosulfan I	<0.12	ug/L		3/17/2014
Endosulfan II	<0.13	ug/L		3/17/2014
Endosulfan Sulfate	<0.15	ug/L		3/17/2014
Endrin	<0.12	ug/L		3/17/2014
Endrin Aldehyde	<0.11	ug/L		3/17/2014
Endrin Ketone	<0.13	ug/L		3/17/2014
gamma-BHC (Lindane)	<0.11	ug/L		3/17/2014
Heptachlor	<0.11	ug/L		3/17/2014
Heptachlor Epoxide	<0.10	ug/L		3/17/2014
Methoxychlor	<0.15	ug/L		3/17/2014
Toxaphene	<3.3	ug/L		3/17/2014
trans-Chlordane	<0.10	ug/L		3/17/2014

Method Reference(s): EPA 8081B
EPA 3510C
Subcontractor ELAP ID: 10142

This report is part of a multipage document and should only be evaluated in its entirety. The Chain of Custody provides additional sample information, including compliance with the sample condition requirements upon receipt.

PARADIGM ENVIRONMENTAL SERVICES, INC.

Lab Project ID: 140901

Client: **PVE Sheffler**

Project Reference: 500008 - McGuiness Blvd, Brooklyn

Sample Identifier: MW-1
Lab Sample ID: 140901-03 **Date Sampled:** 3/12/2014
Matrix: Water **Date Received:** 3/14/2014

Volatile Organics

Analyte	Result	Units	Qualifier	Date Analyzed	
1,1,1-Trichloroethane	< 2.00	ug/L		3/17/2014	18:11
1,1,2,2-Tetrachloroethane	< 2.00	ug/L		3/17/2014	18:11
1,1,2-Trichloroethane	< 2.00	ug/L		3/17/2014	18:11
1,1-Dichloroethane	< 2.00	ug/L		3/17/2014	18:11
1,1-Dichloroethene	< 2.00	ug/L		3/17/2014	18:11
1,2,3-Trichlorobenzene	< 5.00	ug/L		3/17/2014	18:11
1,2,4-Trichlorobenzene	< 5.00	ug/L		3/17/2014	18:11
1,2,4-Trimethylbenzene	< 2.00	ug/L		3/17/2014	18:11
1,2-Dibromo-3-Chloropropane	< 10.0	ug/L		3/17/2014	18:11
1,2-Dibromoethane	< 2.00	ug/L		3/17/2014	18:11
1,2-Dichlorobenzene	< 2.00	ug/L		3/17/2014	18:11
1,2-Dichloroethane	< 2.00	ug/L		3/17/2014	18:11
1,2-Dichloropropane	< 2.00	ug/L		3/17/2014	18:11
1,3,5-Trimethylbenzene	< 2.00	ug/L		3/17/2014	18:11
1,3-Dichlorobenzene	< 2.00	ug/L		3/17/2014	18:11
1,4-Dichlorobenzene	< 2.00	ug/L		3/17/2014	18:11
1,4-dioxane	< 20.0	ug/L		3/17/2014	18:11
2-Butanone	< 10.0	ug/L		3/17/2014	18:11
2-Hexanone	< 5.00	ug/L		3/17/2014	18:11
4-Methyl-2-pentanone	< 5.00	ug/L		3/17/2014	18:11
Acetone	< 10.0	ug/L		3/17/2014	18:11
Benzene	< 0.700	ug/L		3/17/2014	18:11
Bromochloromethane	< 5.00	ug/L		3/17/2014	18:11
Bromodichloromethane	< 2.00	ug/L		3/17/2014	18:11
Bromoform	< 5.00	ug/L		3/17/2014	18:11
Bromomethane	< 2.00	ug/L		3/17/2014	18:11

This report is part of a multipage document and should only be evaluated in its entirety. The Chain of Custody provides additional sample information, including compliance with the sample condition requirements upon receipt.

PARADIGM ENVIRONMENTAL SERVICES, INC.

Lab Project ID: 140901

Client: **PVE Sheffler**

Project Reference: 500008 - McGuiness Blvd, Brooklyn

Sample Identifier: MW-1
Lab Sample ID: 140901-03 **Date Sampled:** 3/12/2014
Matrix: Water **Date Received:** 3/14/2014

Carbon disulfide	< 2.00	ug/L	3/17/2014	18:11
Carbon Tetrachloride	< 2.00	ug/L	3/17/2014	18:11
Chlorobenzene	< 2.00	ug/L	3/17/2014	18:11
Chloroethane	< 2.00	ug/L	3/17/2014	18:11
Chloroform	< 2.00	ug/L	3/17/2014	18:11
Chloromethane	< 2.00	ug/L	3/17/2014	18:11
cis-1,2-Dichloroethene	< 2.00	ug/L	3/17/2014	18:11
cis-1,3-Dichloropropene	< 2.00	ug/L	3/17/2014	18:11
Cyclohexane	< 10.0	ug/L	3/17/2014	18:11
Dibromochloromethane	< 2.00	ug/L	3/17/2014	18:11
Dichlorodifluoromethane	< 2.00	ug/L	3/17/2014	18:11
Ethylbenzene	< 2.00	ug/L	3/17/2014	18:11
Freon 113	< 2.00	ug/L	3/17/2014	18:11
Isopropylbenzene	< 2.00	ug/L	3/17/2014	18:11
m,p-Xylene	< 2.00	ug/L	3/17/2014	18:11
Methyl acetate	< 2.00	ug/L	3/17/2014	18:11
Methyl tert-butyl Ether	< 2.00	ug/L	3/17/2014	18:11
Methylcyclohexane	< 2.00	ug/L	3/17/2014	18:11
Methylene chloride	< 5.00	ug/L	3/17/2014	18:11
Naphthalene	< 5.00	ug/L	3/17/2014	18:11
n-Butylbenzene	< 2.00	ug/L	3/17/2014	18:11
n-Propylbenzene	< 2.00	ug/L	3/17/2014	18:11
o-Xylene	< 2.00	ug/L	3/17/2014	18:11
p-Isopropyltoluene	< 2.00	ug/L	3/17/2014	18:11
sec-Butylbenzene	< 2.00	ug/L	3/17/2014	18:11
Styrene	< 5.00	ug/L	3/17/2014	18:11
tert-Butylbenzene	< 2.00	ug/L	3/17/2014	18:11
Tetrachloroethene	< 2.00	ug/L	3/17/2014	18:11

This report is part of a multipage document and should only be evaluated in its entirety. The Chain of Custody provides additional sample information, including compliance with the sample condition requirements upon receipt.

PARADIGM ENVIRONMENTAL SERVICES, INC.

Lab Project ID: 140901

Client: **PVE Sheffler**

Project Reference: 500008 - McGuiness Blvd, Brooklyn

Sample Identifier: MW-1
Lab Sample ID: 140901-03 **Date Sampled:** 3/12/2014
Matrix: Water **Date Received:** 3/14/2014

Toluene	< 2.00	ug/L	3/17/2014	18:11
trans-1,2-Dichloroethene	< 2.00	ug/L	3/17/2014	18:11
trans-1,3-Dichloropropene	< 2.00	ug/L	3/17/2014	18:11
Trichloroethene	< 2.00	ug/L	3/17/2014	18:11
Trichlorofluoromethane	< 2.00	ug/L	3/17/2014	18:11
Vinyl chloride	< 2.00	ug/L	3/17/2014	18:11

Method Reference(s): EPA 8260C
EPA 5030
Data File: X11855.D

This report is part of a multipage document and should only be evaluated in its entirety. The Chain of Custody provides additional sample information, including compliance with the sample condition requirements upon receipt.

Analytical Report Appendix

The reported results relate only to the samples as they have been received by the laboratory.

Each page of this document is part of a multipage report. This document may not be reproduced except in its entirety, without the prior consent of Paradigm Environmental Services, Inc.

All soil/sludge samples have been reported on a dry weight basis, unless qualified "reported as received". Other solids are reported as received.

Low level Volatiles blank reports for soil/solid matrix are based on a nominal 5 gram weight. Sample results and reporting limits are based on actual weight, which may be more or less than 5 grams.

The Chain of Custody provides additional information, including compliance with sample condition requirements upon receipt. Sample condition requirements are defined under the 2003 NELAC Standard, sections 5.5.8.3.1 and 5.5.8.3.2.

NYSDOH ELAP does not certify for all parameters. Paradigm Environmental Services or the indicated subcontracted laboratory does hold certification for all analytes where certification is offered by ELAP unless otherwise specified. Aliquots separated for certain tests, such as TCLP, are indicated on the Chain of Custody and final reports with an "A" suffix.

Data qualifiers are used, when necessary, to provide additional information about the data. This information may be communicated as a flag or as text at the bottom of the report. Please refer to the following list of analyte-specific, frequently used data flags and their meaning:

"<" = Analyzed for but not detected at or above the quantitation limit.
"E" = Result has been estimated, calibration limit exceeded.
"Z" = See case narrative.
"D" = Sample, Laboratory Control Sample, or Matrix Spike Duplicate results above Relative Percent Difference limit.
"M" = Matrix spike recoveries outside QC limits. Matrix bias indicated.
"B" = Method blank contained trace levels of analyte. Refer to included method blank report.
"J" = Result estimated between the quantitation limit and half the quantitation limit.
"L" = Laboratory Control Sample recovery outside accepted QC limits.
"P" = Concentration differs by more than 40% between the primary and secondary analytical columns.

PARADIGM ENVIRONMENTAL SERVICES, INC.

179 Lake Avenue
Rochester, NY 14608
(585) 647-2530 • (800) 724-1997
FAX: (585) 647-3311

CHAIN OF CUSTODY

REPORT TO:
COMPANY: PVE Sheffler
ADDRESS: One Civic Center Plaza, Suite 501
CITY: Poughkeepsie STATE: NY ZIP: 12601
PHONE: 845-454-2544 FAX: -2655
ATTN: S. Lewison, C. Tarbell, C. Brown.

INVOICE TO:
COMPANY: SAME
ADDRESS:
CITY: STATE: ZIP:
PHONE: FAX:
ATTN: Tara Alvarado

LAB PROJECT #: 140901
CLIENT PROJECT #: 500008
TURNAROUND TIME: (WORKING DAYS) Results by 3/19/14
STD: 1 [ ] 2 [ ] 3 [ ] 5 [ ] OTHER: [X]
QUOTE #:

PROJECT NAME/SITE NAME: 500008 - McGuinness Blvd, Brooklyn

COMMENTS: Send NYSDEC EDD to. No hexavalent chromium, no cyanide. Please return cooler.

REQUESTED ANALYSIS

	DATE	TIME	COMPOSITE	GRAB	SAMPLE LOCATION/FIELD ID	MATRIX	NUMBER CONTAINERS	Part 375 VOCs	Part 375 SVOCs	Part 375 metals	Part 375 PCBs	Part 375 Pesticides						REMARKS	PARADIGM LAB SAMPLE NUMBER
1	3-12-14	1040		X	MW-2	Water	6	X	X	X	X	X							01
2	3-12-14	1158		X	MW-3	"	6	X	X	X	X	X							02
3	3-12-14	1330		X	MW-1	"	6	X	X	X	X	X							03
4																			
5																			
6																			
7																			
8																			
9																			
10																			

LAB USE ONLY BELOW THIS LINE

Sample Condition: Per NELAC/ELAP 210/241/242/243/244

Receipt Parameter	NELAC Compliance	
Container Type:	Y [ ]	N [ ]
Comments:		
Preservation:	Y [ ]	N [ ]
Comments:		
Holding Time:	Y [ ]	N [ ]
Comments:		
Temperature:	Y [ ]	N [ ]
Comments:		

Sampled By: [signature] Date/Time: 3-12-14/1400

Relinquished By: [signature] Date/Time: 3-12-14/1500

Received By: [signature] Date/Time: 3/14/14 0925

Received @ Lab By: Date/Time:

Total Cost:

P.I.F.

Chain of Custody Supplement

Client: PVE **Completed by:** SSC

Lab Project ID: 140901 **Date:** 3/14/14

Sample Condition Requirements

Per NELAC/ELAP 210/241/242/243/244

NELAC compliance with the sample condition requirements upon receipt

Condition	Yes	No	N/A
Container Type	X		
Comments			
Transferred to method-compliant container			X
Headspace (<1 mL)	X VOA		X
Comments			
Preservation	X		X SVOA, Pest PCB
Comments			
Chlorine Absent (<0.10 ppm per test strip)			X
Comments			
Holding Time	X		
Comments			
Temperature	X		X Metals
Comments	4°C iced		
Sufficient Sample Quantity	X		
Comments	Low Vol		

179 Lake Avenue, Rochester, NY 14608 Office (585) 647-2530 Fax (585) 647-3311

PARADIGM

CHAIN OF CUSTODY

ENVIROTEST: ELAP ID: 10142

75828

REPORT TO:		INVOICE TO:			
COMPANY: Paradigm Environmental		COMPANY: Same		LAB PROJECT #:	CLIENT PROJECT #: 03/
ADDRESS:		ADDRESS:			
CITY:	STATE: ZIP:	CITY:	STATE: ZIP:	TURNAROUND TIME: (WORKING DAYS)	
PHONE:	FAX:	PHONE:	FAX:		
PROJECT NAME/SITE NAME:	ATTN: Kate Hansen	ATTN: Meridith Dillman		STD: [ ]1 [X]2 [ ]3 [ ]5	OTHER [ ]
	COMMENTS: Please email results to khansen@paradigmenv.com and jdaloia@paradigmenv.com			Date Due: 3/19/14	

REQUESTED ANALYSIS

	DATE	TIME	COMPOSITE	GRAB	SAMPLE LOCATION/FIELD ID	MATRIX	NUMBER OF CONTAINERS	8260 BTEX	REMARKS	PARADIGM LAB SAMPLE NUMBER
1	3/12/14	1040			140901-01	W	1	X		
2	↓	1258			↓ -02	↓	1	X		
3	↓	1330			↓ -03	↓	1	X		
4										
5										
6										
7										
8										
9										
10										

LAB USE ONLY BELOW THIS LINE

Sample Condition: Per NELAC/ELAP 210/241/242/243/244

Receipt Parameter	NELAC Compliance	
Container Type:	Y [ ]	N [ ]
Comments:		
Preservation:	Y [ ]	N [ ]
Comments:		
Holding Time:	Y [ ]	N [ ]
Comments:		
Temperature:	Y [ ]	N [ ]
Comments: 3.9		

Client

Sampled By: [signature] Date/Time: 3/14/14 1600

Relinquished By: [signature] Date/Time:

Received By: [signature] ETL Date/Time: 3/17/14 1010

Received @ Lab By: Date/Time:

Total Cost:

P.I.F.

UPS Track # 1Z E11 212 13 9139 8658