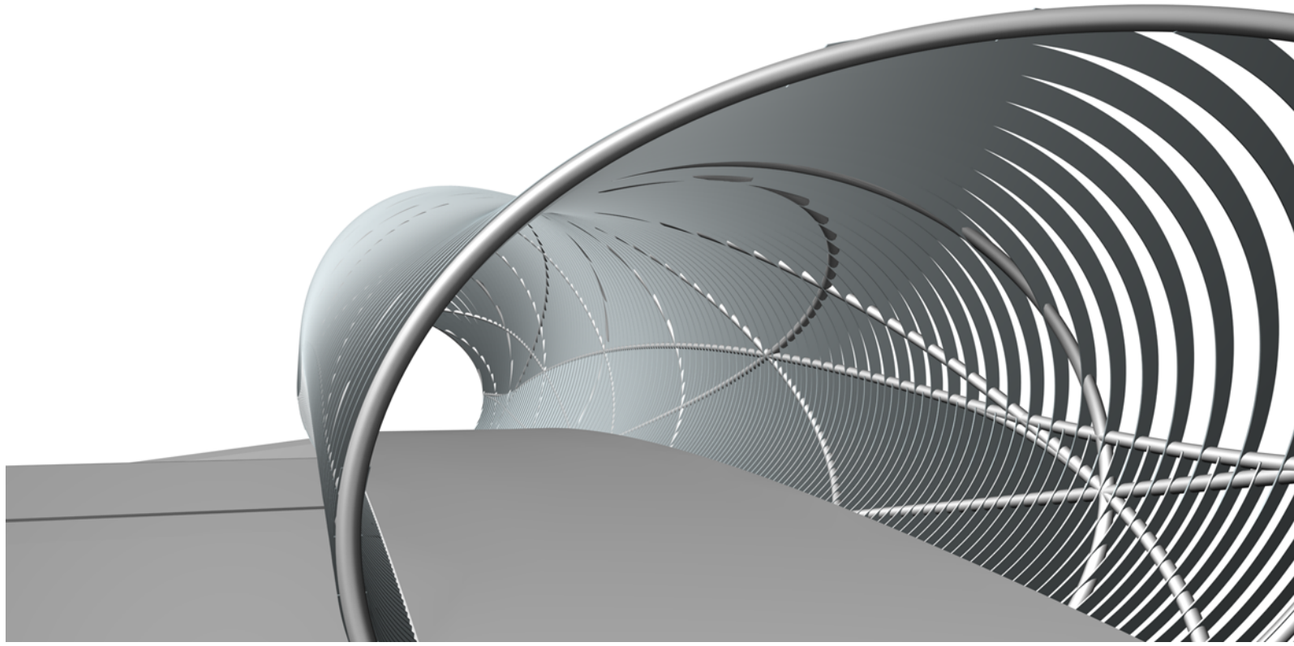

Pedestrian Footbridge

Lee Bank Middleway

Park Central, Birmingham

Technical Report - 03/03/05

Studio ORTA + atelier one

CONTENTS

Preliminary Design Statement	1
Engineering Approach	2
Dimensions - Plan	3
Dimensions - Elevation	4
Vertical Clearance Envelope	5
Pedestrian Approach Views	6
Vehicle Approach Views	7
Drainage	8
Lighting - External	9
Lighting - Internal	10
Parapets and Handrails	11
Walkway Surfaces	12
Transport	13
Durability and Maintenance	14
Preliminary Analysis - Contour Model	15
Preliminary Analysis - Mesh Model	17
Indicative Costs	19
Indicative Program	20

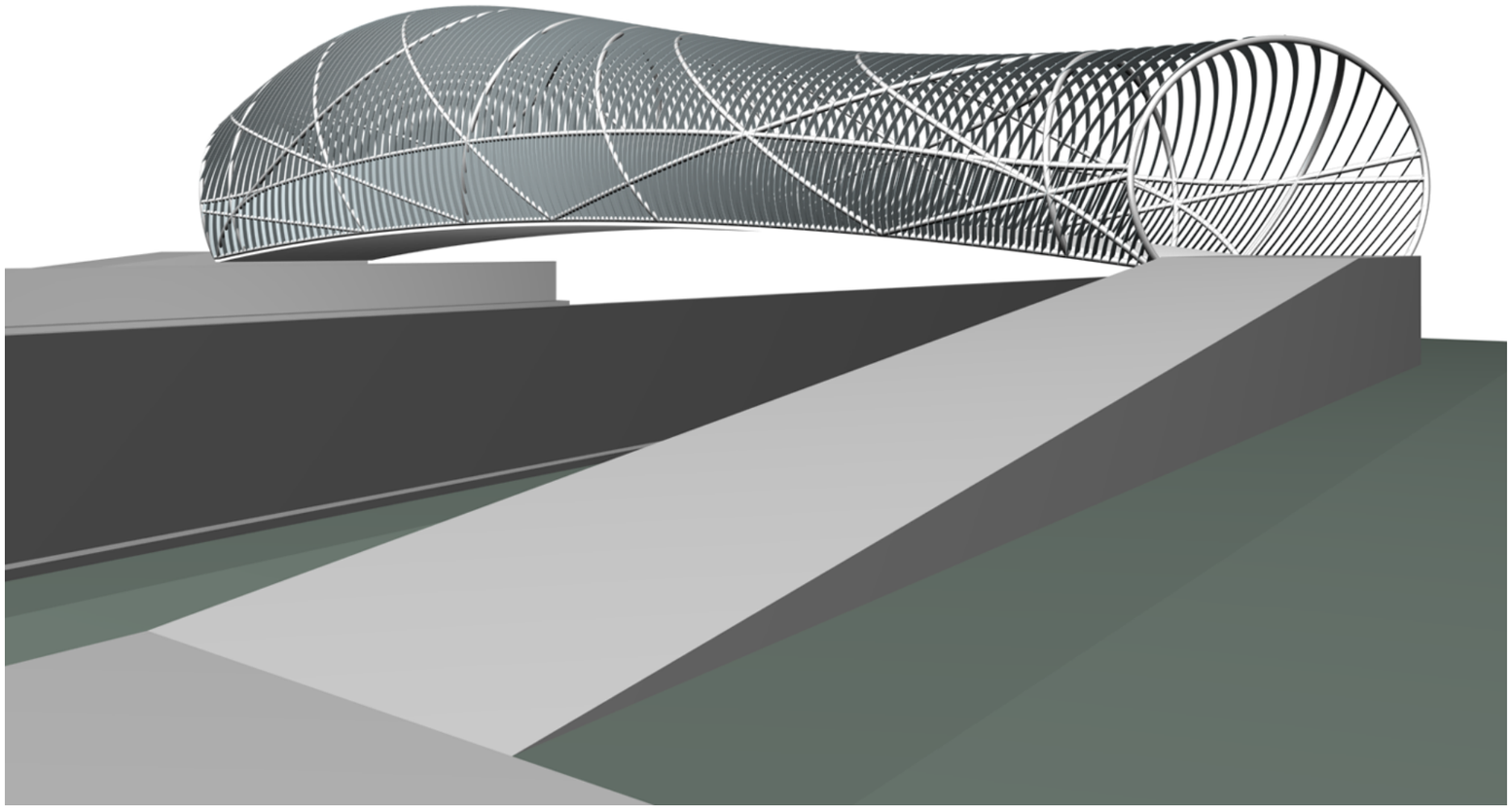

Contour Bridge: general view

Preliminary Design Statement

Lucy Orta, artist

The concept for this public sculpture has been inspired by the 'Constellation' strategy devised by the Light Observation Group for the Attwood Green regeneration programme.

The metaphor of the cosmos, the infinite and imaginary world beyond the night sky inspired the organic form of this sculpture. It symbolises a 'Time Warp' evoking the phases of a journey that the pedestrians will encounter when crossing the bridge. The iconic sculpture will link two communities creating a veritable 'Nexus' or 'Social Link' that will be further enhanced at night by the effect of the light rings and vertebrae. The innovation in the design of the contour volume will essentially 'quiver', transforming the daily routine, and offering a new visual and emotive experience for the community and the city of Birmingham at large.

atelier one

This proposal for Lee Bank Middleway Pedestrian Bridge is composed of circular 'hoops' and a series of 'contours' running perpendicular to the length of the bridge.

The hoops are constructed from circular hollow sections and create an encircling framework over the pedestrian bridge. At critical points, elements of this structure create a truss which supports the single span of the bridge over the dual carriage way.

The contours create a walkway for pedestrians. From parapet level to floor level of the bridge, a more dense array of contours establishes the spacing required by regulations for the balustrade. All contours are fabricated from flat plate steel cut to the required profiles to establish the form of the bridge. These contours, developed from study sketches of the bridge by artist Lucy Orta, generate a dynamic visual experience known as a moiré effect. The moiré effect is creates a feeling of vibration. This is designed for the pedestrians as they approach the bridge from the side.

We are assuming that the ramp structures will be the same as the original proposal within the AIP document with an alternative balustrade to give continuity to the bridge. The surface finish on the ramps will need further discussion.

The body of this document addresses the spanning part of the bridge.

TYPICAL

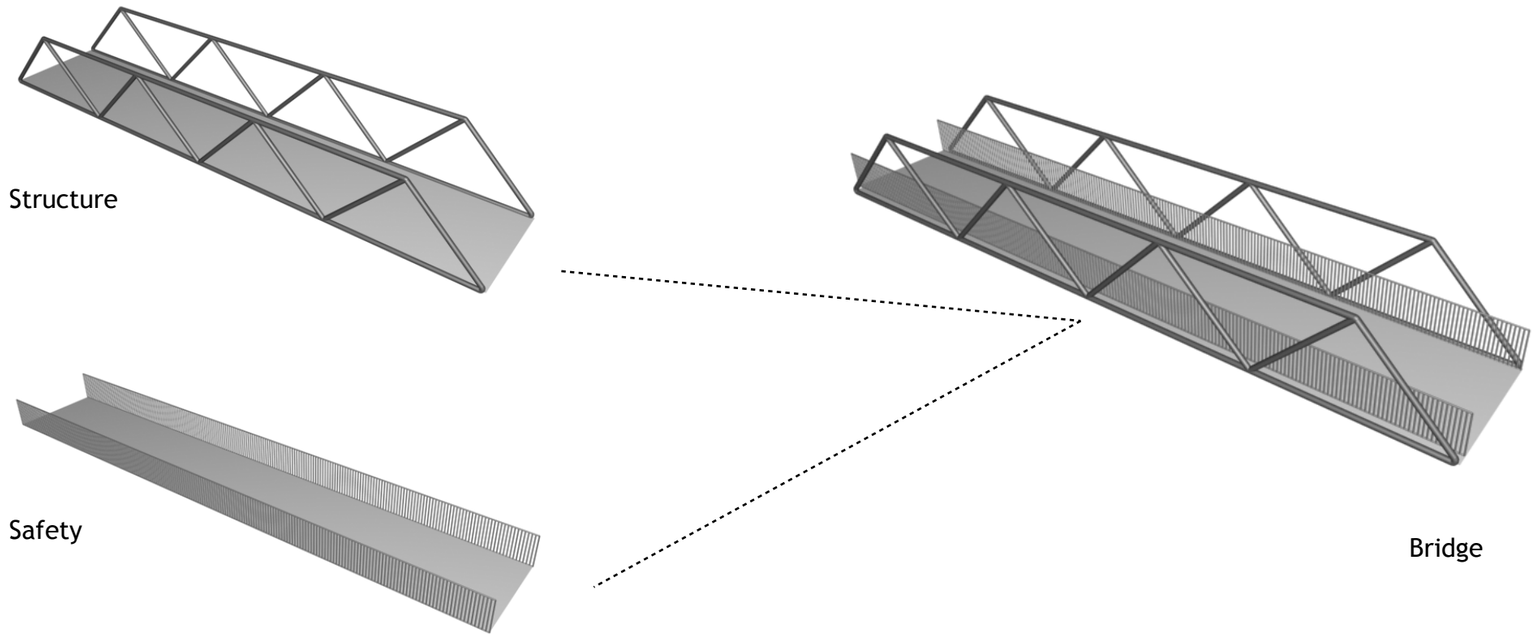

PROPOSED

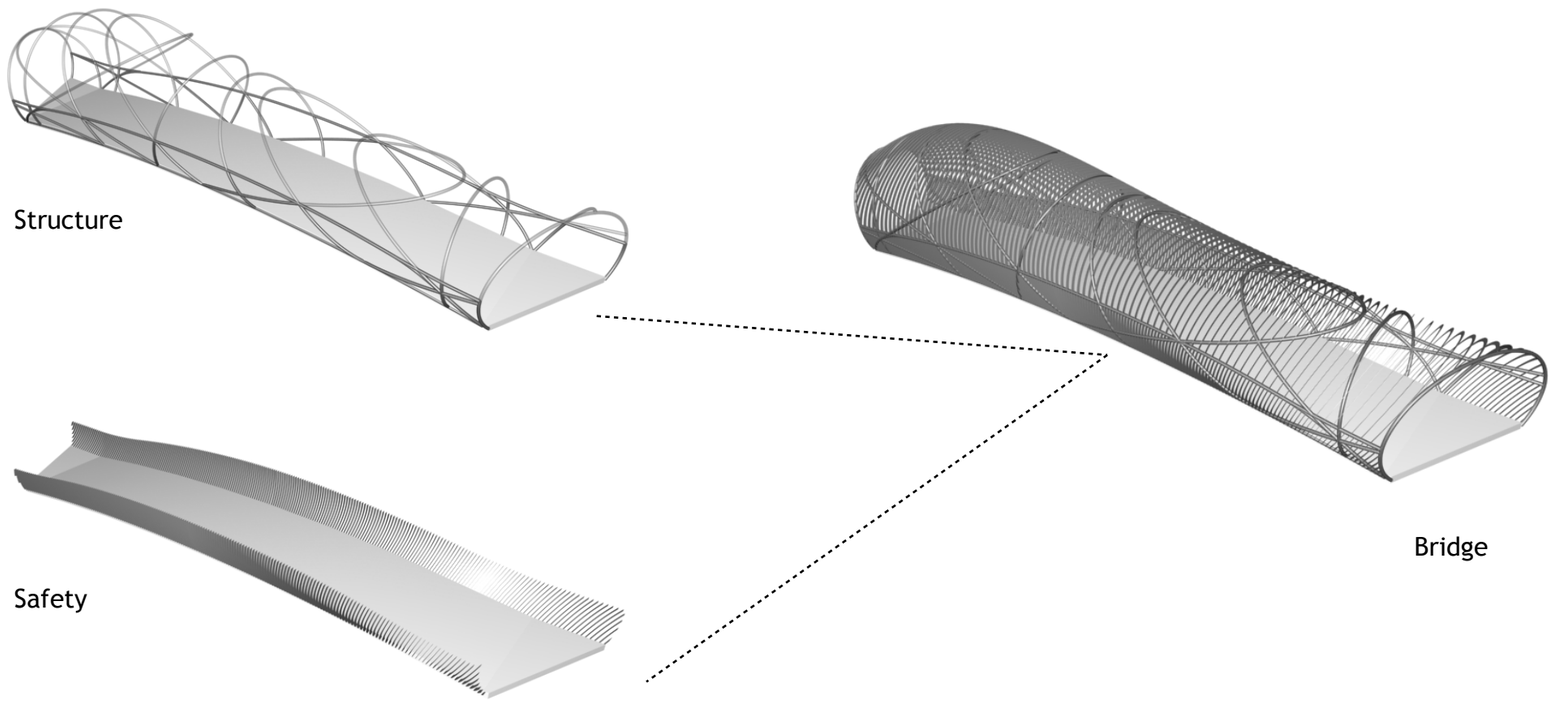

Engineering Approach

As shown in the diagrams opposite, the engineering approach began by identifying two critical components of bridge design; structure and safety. We then explored the way in which these components could be articulated in our proposal. The form of the bridge is unique and the structure apparently random. However, the diagrams for these critical components in both situations are analogous.

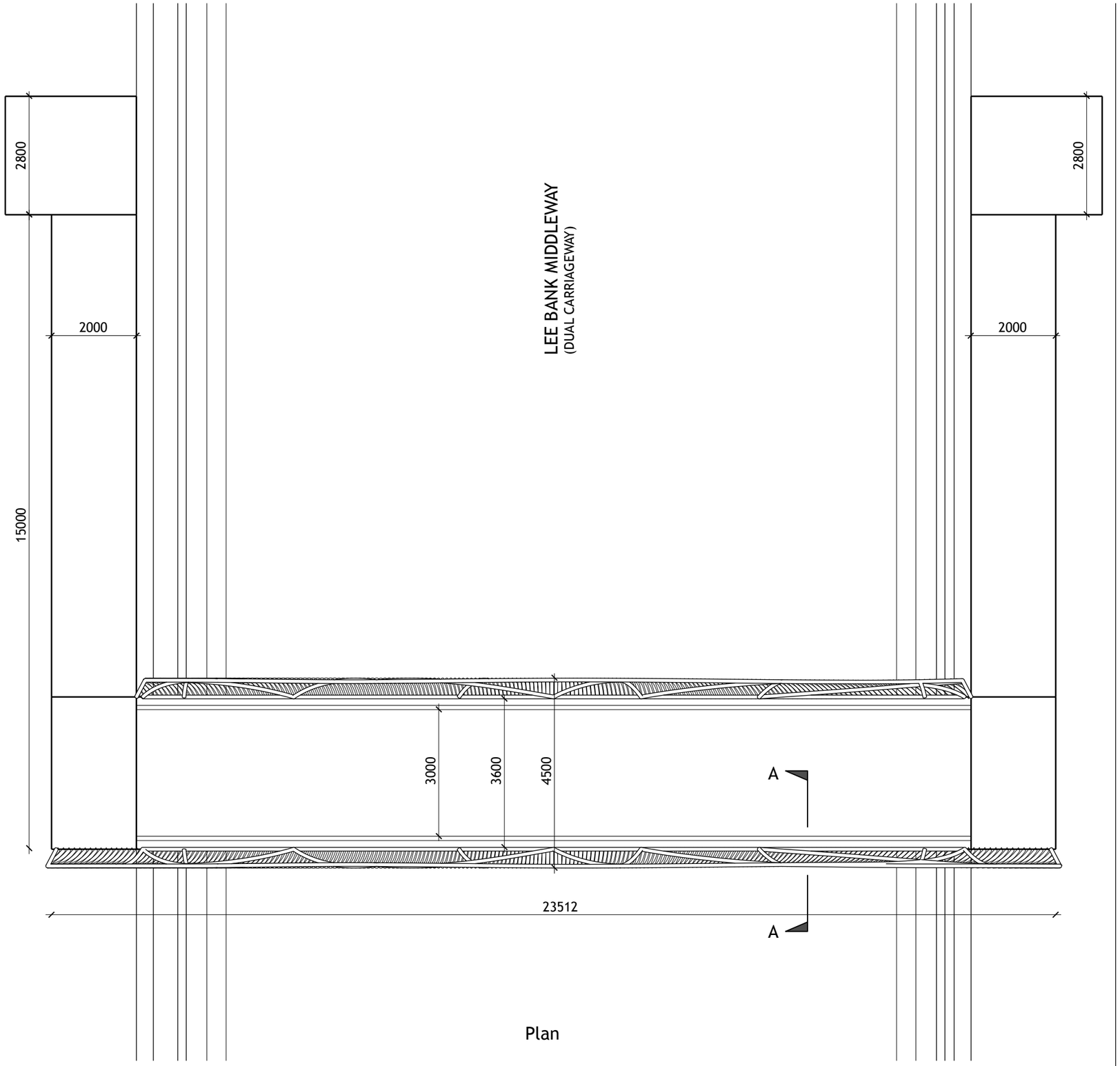

Plan

Dimensions - Plan

Critical dimensions in plan regarding the length and width of the footbridge and ramps has been maintained from the original proposal by Bullen. The enclosure around the pedestrian footbridge has a maximum width of 4.5m. This width has been designed based on transport restrictions. In order to keep costs down, this structure will have to be fabricated as a single piece and transported and lifted as one element. This reduces both fabrication detailing and also limits disruption on site.

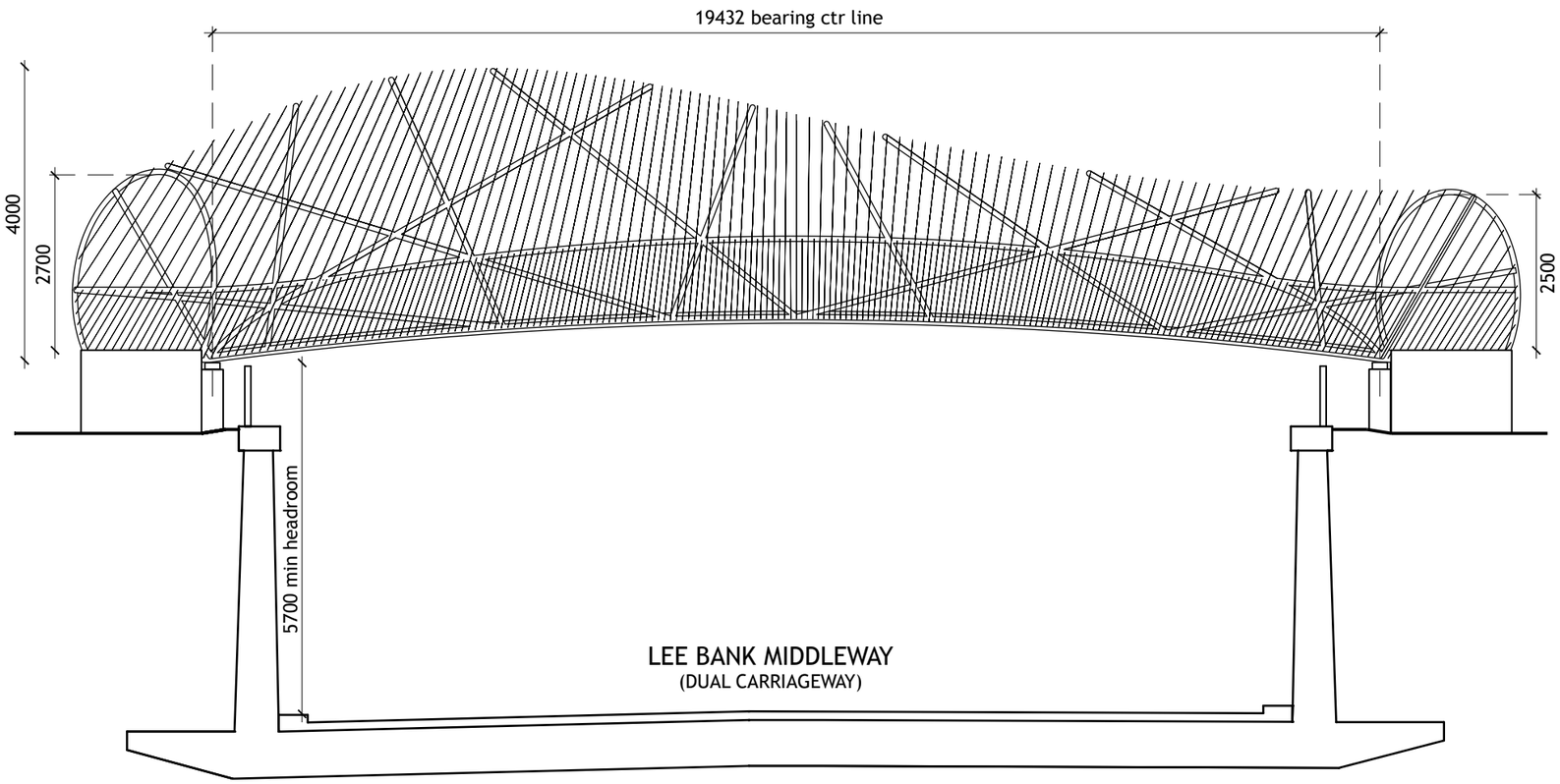

Elevation

Dimensions - Elevation

Critical dimensions in elevation regarding a minimum clearance height of 5.7m from the dual carriageway to the lowest point on the underside of the pedestrian footbridge have been maintained. The maximum height of the enclosure is 4.88m. This width may change following confirmation of exact road transport dimensions. The maximum entry heights to the enclosure are currently 2.7m on the north side and 2.5m on the south side of the bridge. The dimension from centre line to centre line of bearing has been maintained.

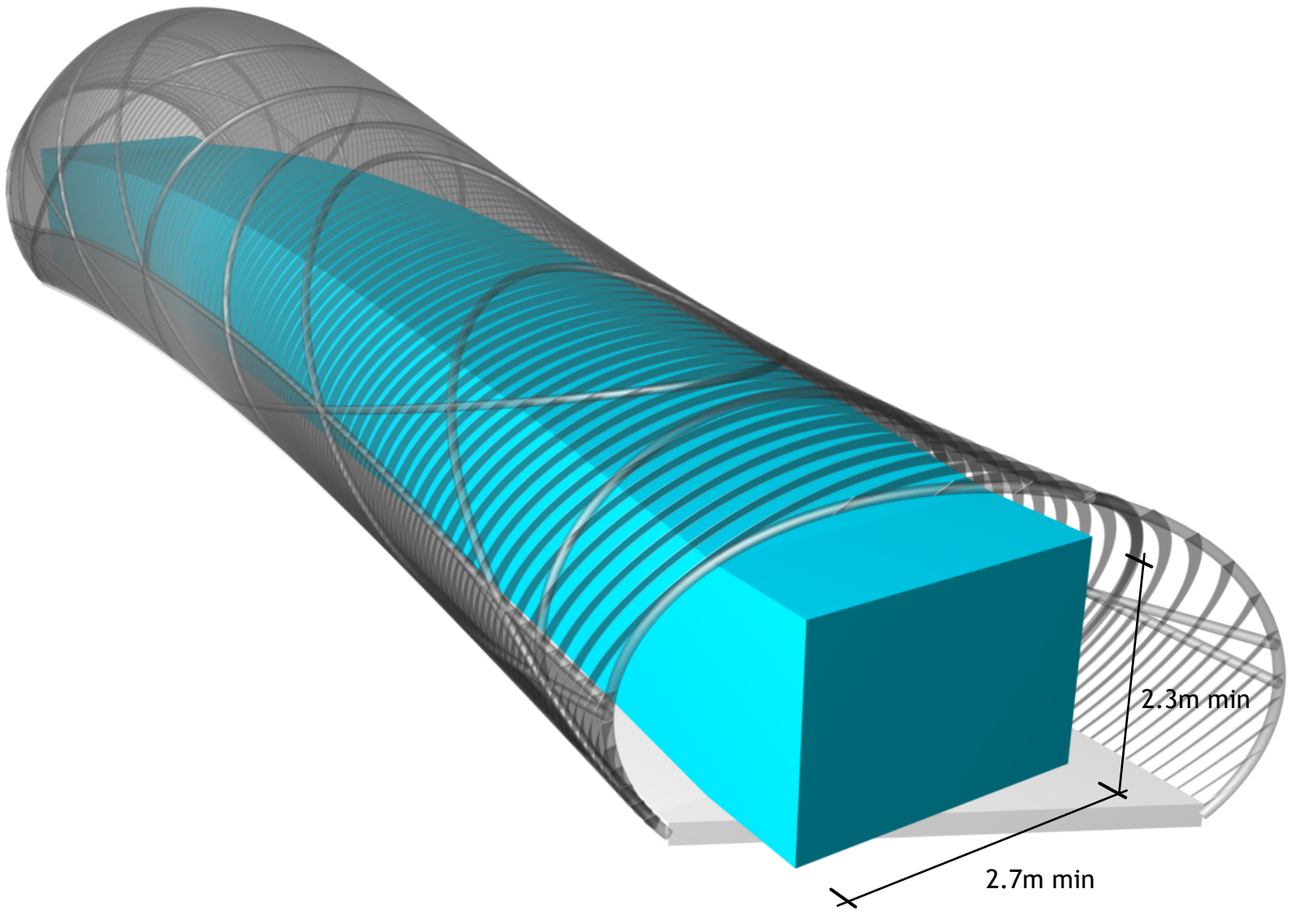

Vertical Clearance Envelope extruded through proposed covered pedestrian footbridge

Vertical Clearance Envelope

In accordance with Chapter 8.6 of BD 29/04 the following vertical clearance envelopes shall be maintained.

The ramped approaches to the pedestrian footbridge are not enclosed and will maintain a width of 2m minimum clearance from the innermost surface of the handrail.

The enclosed pedestrian footbridge shall retain 2.3m minimum headroom across a 2.7m minimum width from the innermost surface of the handrail inside the enclosure. This envelope shall be free of any intrusion. We understand that this is not to be classed as both a cycle and pedestrian bridge. The clearances are therefore generous for a pedestrian walkway.

The enclosure will be designed to prevent unauthorised access to the sides and the roof with detailing at both ends taking preventative measures to stop access.

The necessity for wind tunnel testing shall be investigated if applicable upon completion of detailed design.

Contour Bridge
approach from south

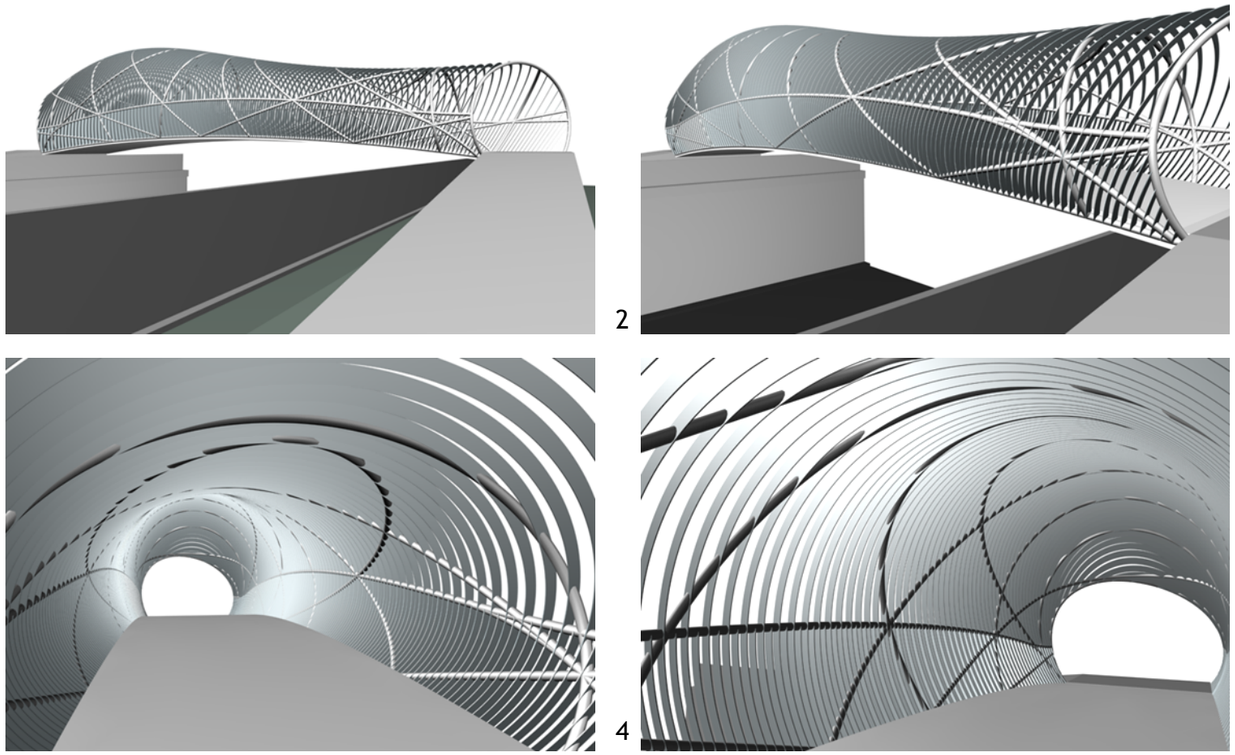

Contour Bridge
approach from north

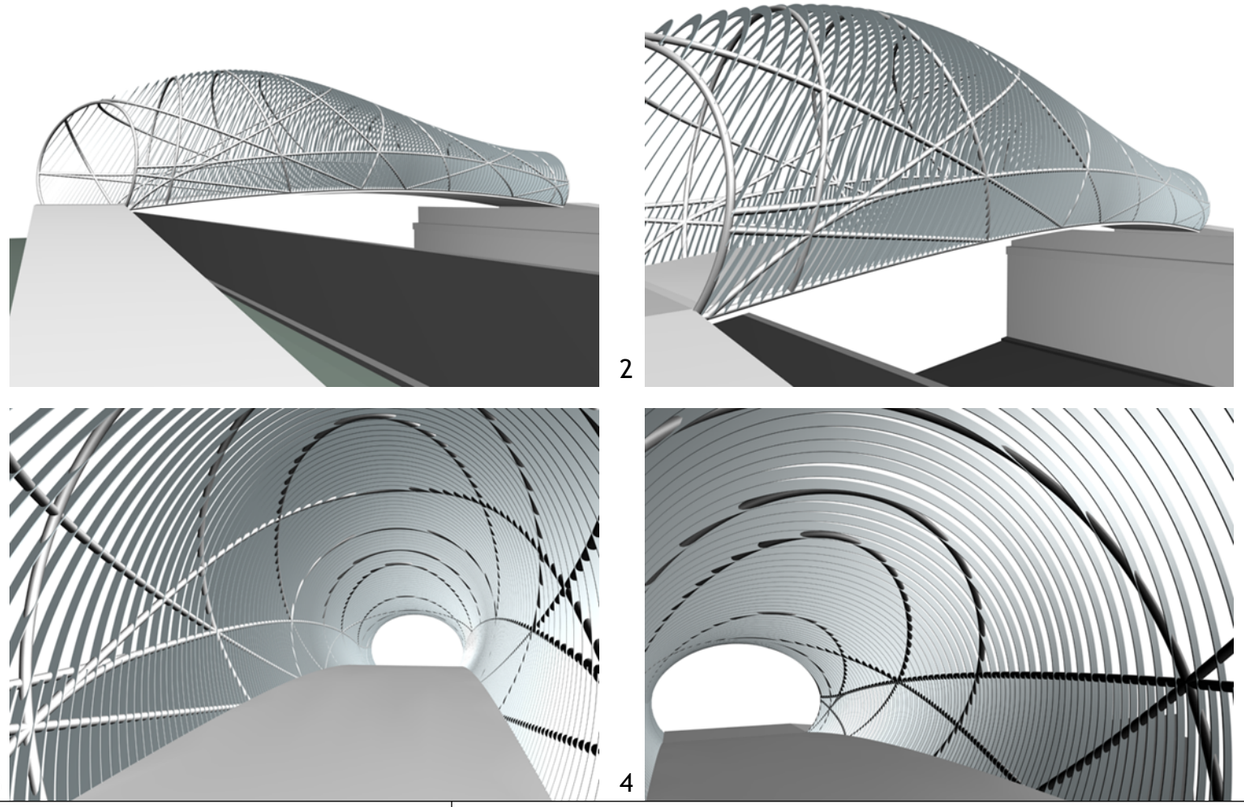

Pedestrian Approach Views

These diagrams show a sequence of views experienced by a pedestrian approaching the footbridge. They highlight the moiré effect and the constantly shifting and dynamic experience that is possible through a static object.

Lee Bank Middleway - approach from west

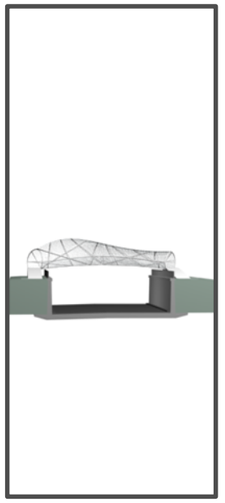

Distance:
160 m

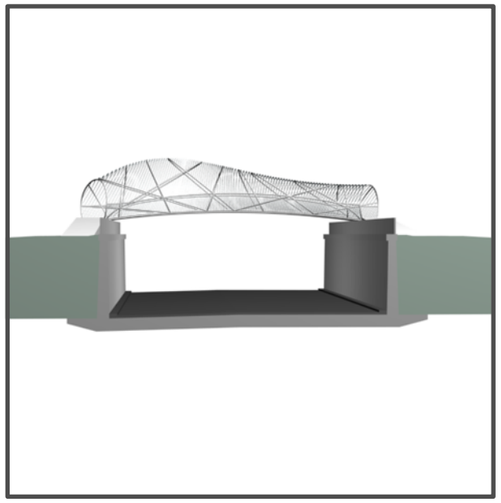

80 m

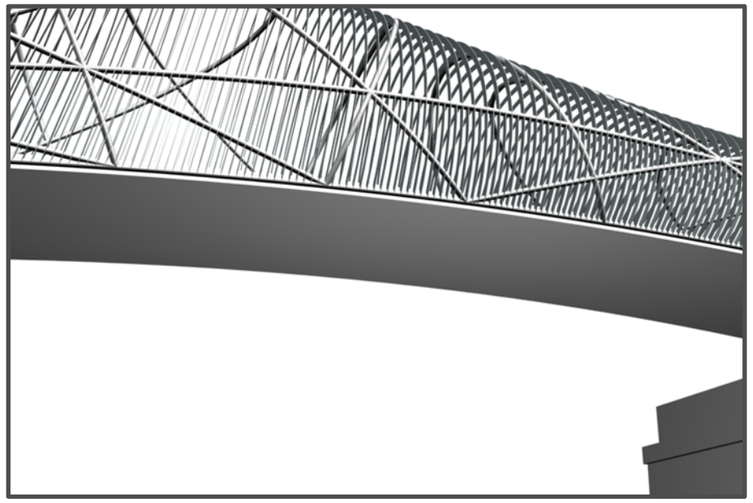

16 m

Lee Bank Middleway - approach from east

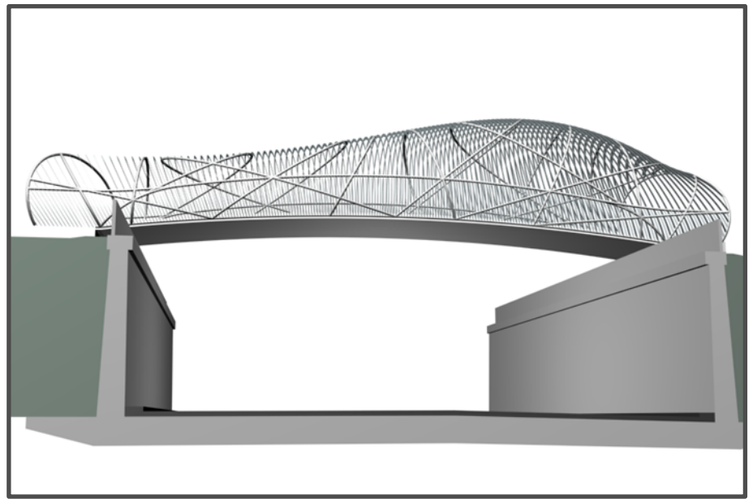

Distance:
40 m

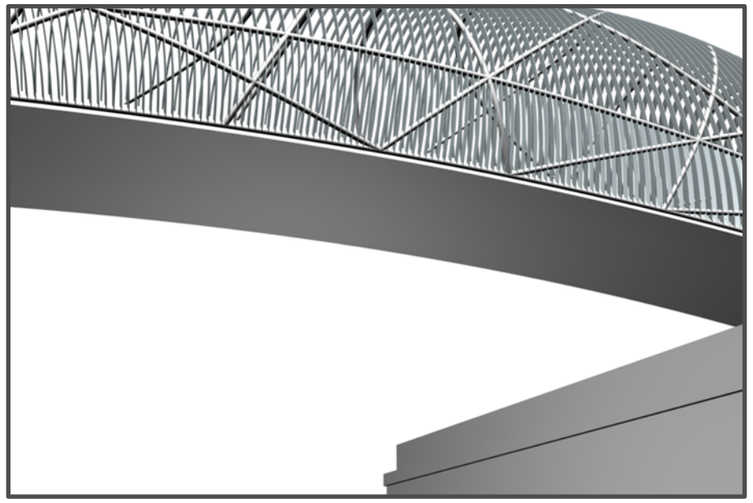

16 m

Vehicle Approach Views

These diagrams show a sequence of views along the main east/west axial approach by motor vehicles towards the proposed pedestrian footbridge.

Direction and degrees of fall across side ramps, landings and pedestrian footbridge for water runoff and drainage.

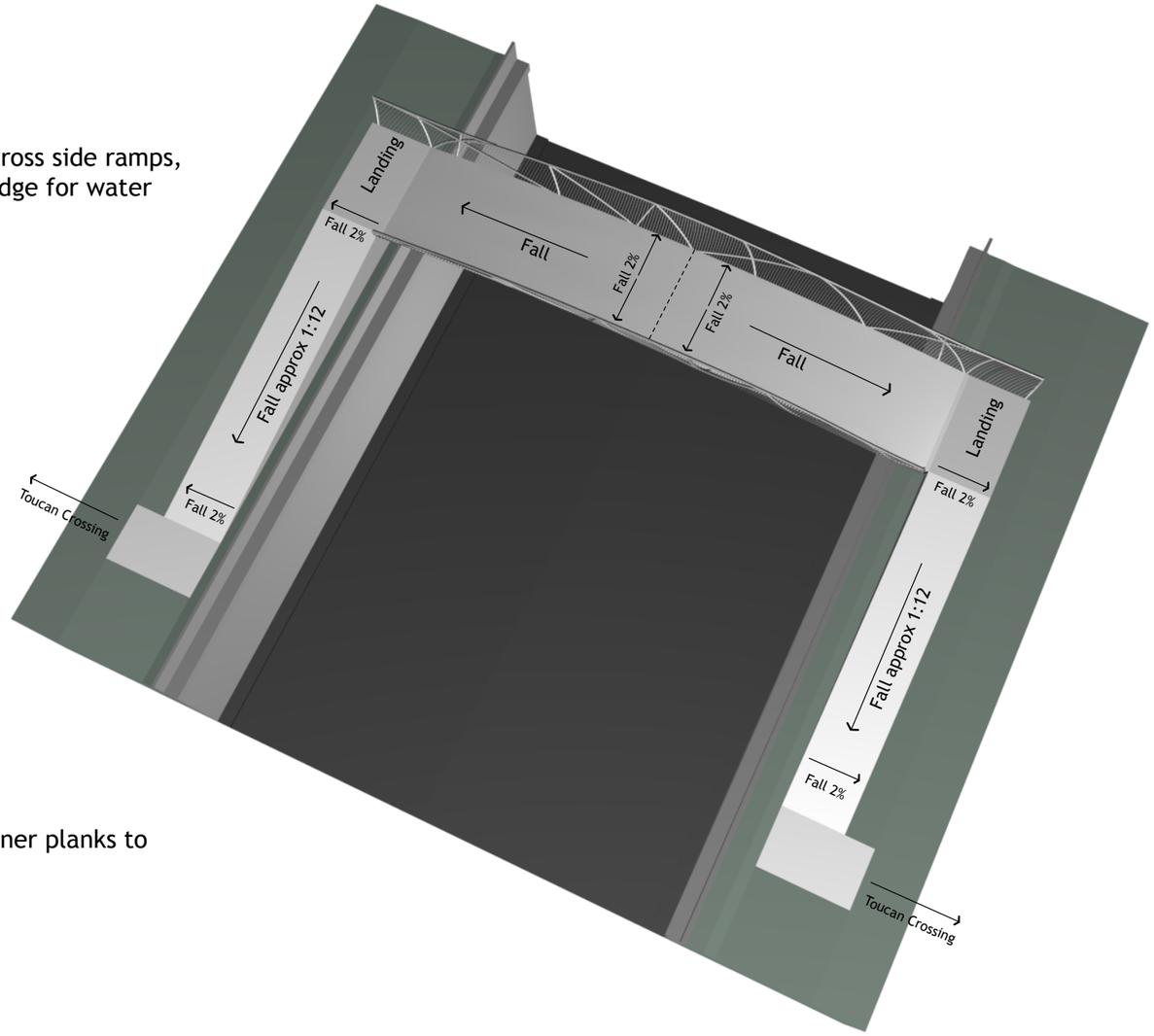

Section Detail at A-A
Fall of water across Alcan designer planks to aluminium gutter

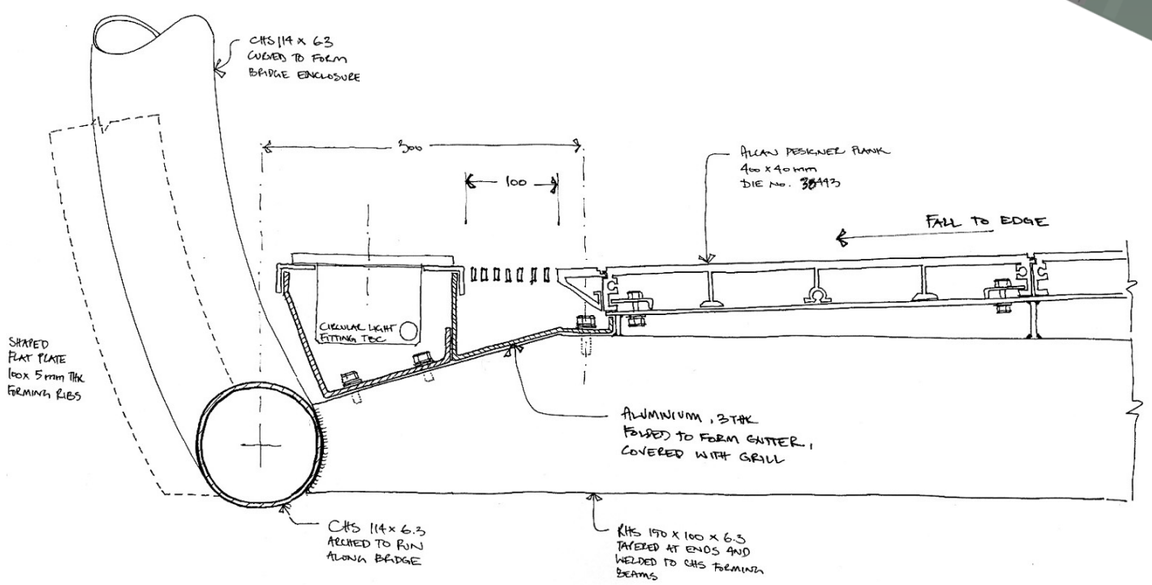

Drainage

In accordance with Chapter 9 of BD 29/04 adequate provision shall be made for the drainage of water from the footbridge. Principle falls and cross falls shall be in accordance with regulations as indicated on the accompanying diagram. It is proposed that the footbridge deck shall be closed aluminium Alcan designer planks and the water is directed into drainage gulleys at each edge of the walkway. Ramps on both sides of the bridge shall have upstands to allow for the channelling and runoff of water which shall be directed towards either a drainage system or soakaway.

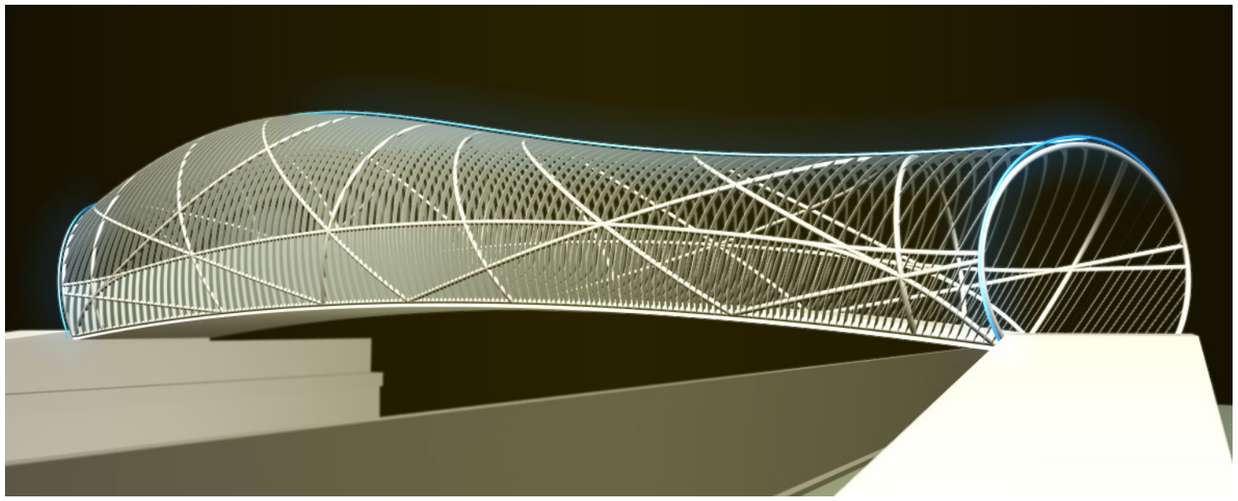

Walkway view - external lighting concept

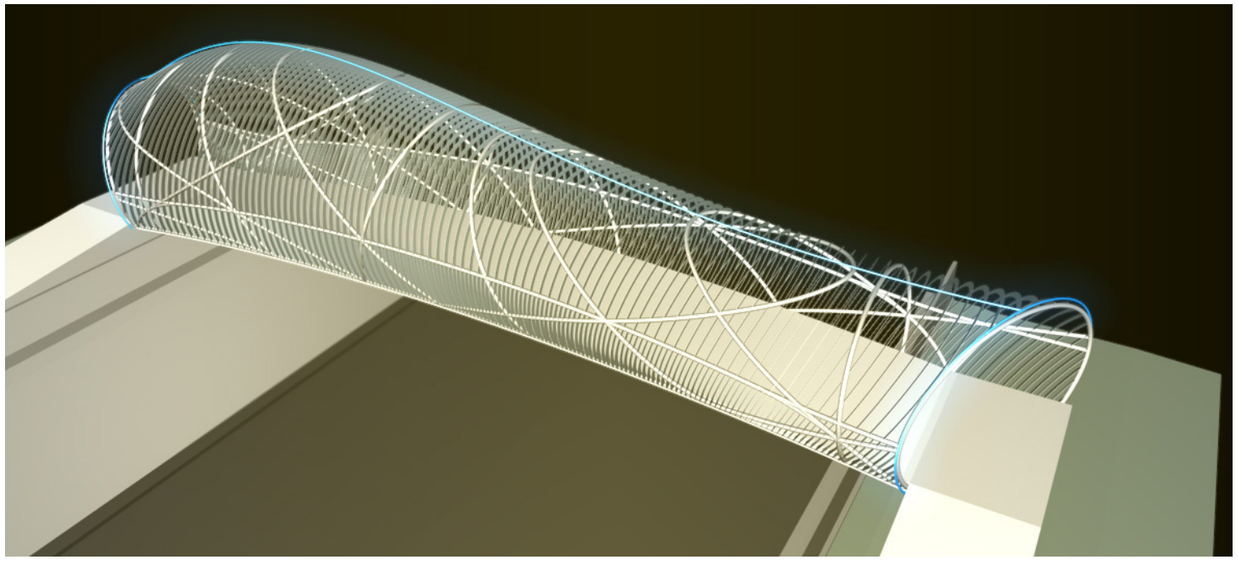

Aerial view - external lighting concept

Lighting - External

The external lighting concept consists of three colour strips. They follow the form of the bridge, highlighting the following:

1. The upper profile of the enclosure, revealing the subtle curvature of this element.

2. The two entry points to the enclosure, reinforcing the idea of a 'gateway' into the space and providing clear way finding for users.

In accordance with Chapter 11 of BD 29/04, an investigation shall be undertaken to determine the level of existing road or footway lighting. If existing lighting is inadequate for the general illumination of the bridge exterior, additional spotlighting shall be investigated. The lighting will inherently be designed for robustness and vandal resistance with low energy output and low maintenance.

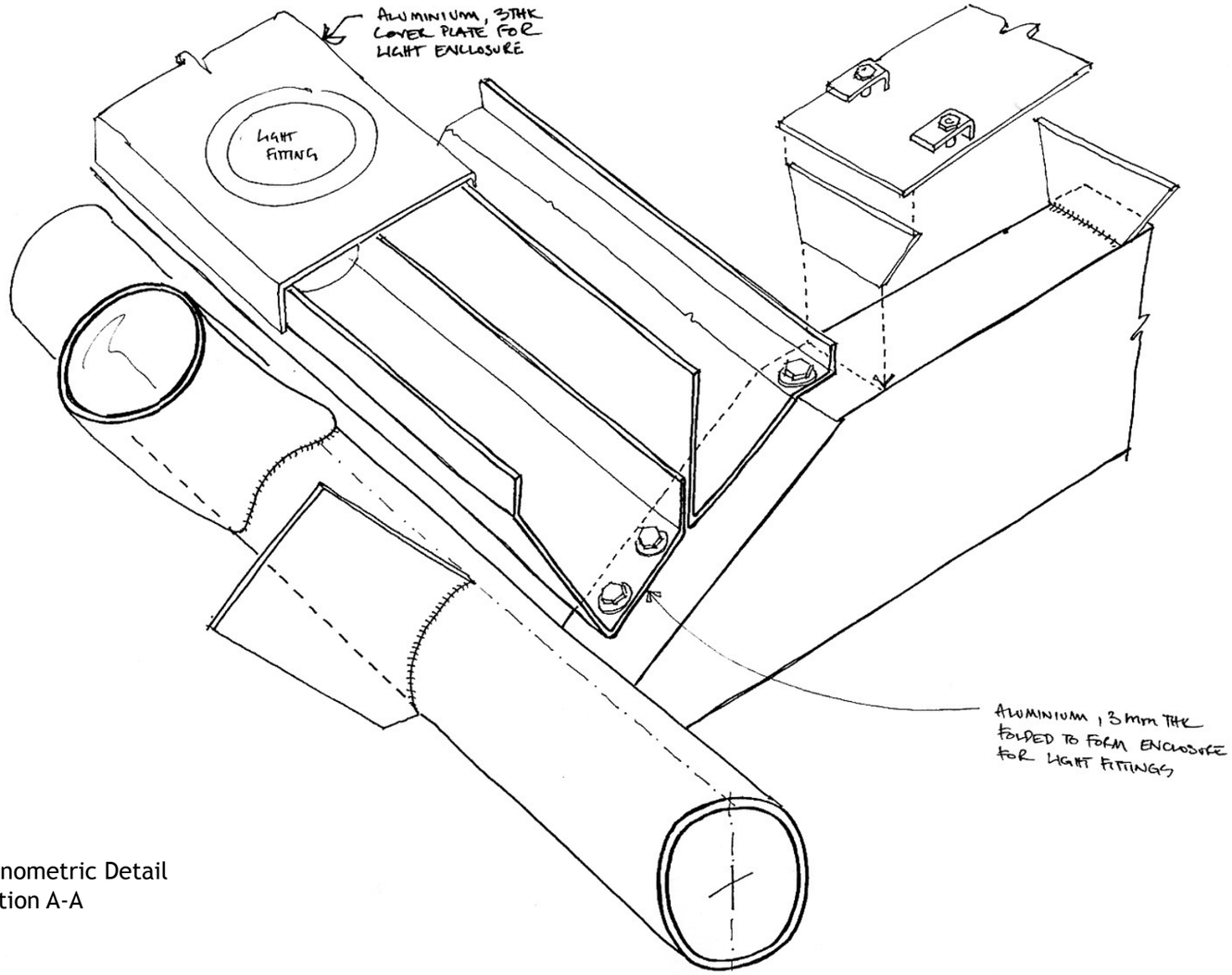

Axonometric Detail
Section A-A

Product Examples

iGuzzi B001 recessed ground light

iGuzzi 7890 recessed ground light

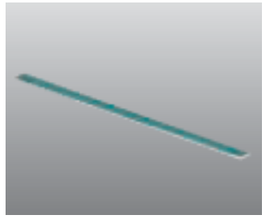

Thorn BAND recessed ground light

Lighting - Internal

It is proposed that additional lighting augment the bridge due to its partially 'enclosed' design. This will consist of strip or spot lighting, flush mounted on both sides of the footbridge deck, illuminating the internal surface of the structure and internal edges of the contours and providing facial recognition. The deck of the bridge and ramps could be illuminated with lighting fixed to the underside of the handrails.

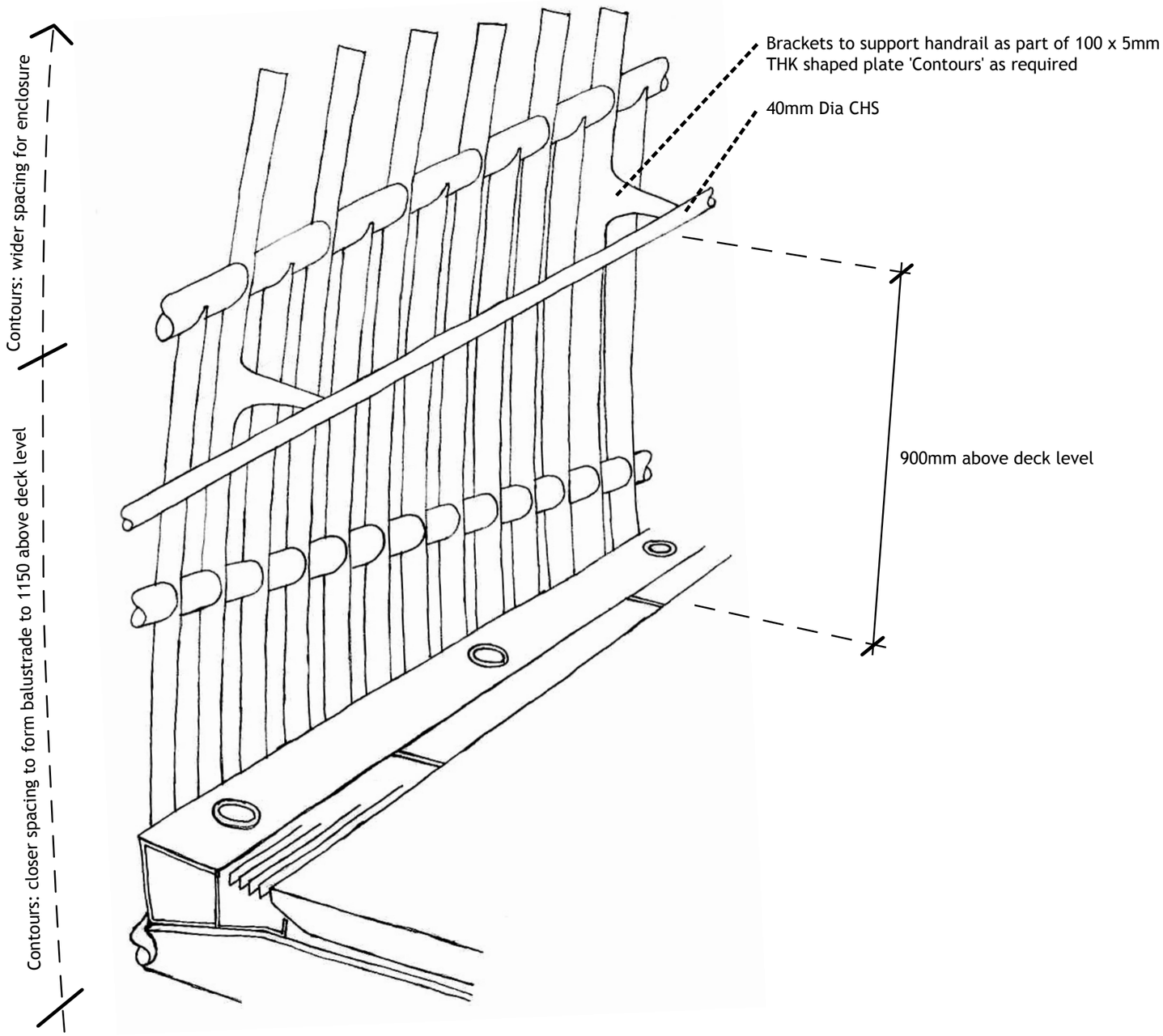

3D Parapet & Handrail Detail at Section A-A

Parapets and Handrails

In accordance with Chapter 7 of BD 29/04 it is proposed that all handrails will be circular sections of 40mm diameter with a height above ramp and footbridge deck level of 900mm. Within the footbridge the handrail shall have a clearance through the entire side walls of the enclosure of 60mm.

In accordance with Chapter 2.10 of BD 52/93, along the adjoining side ramps the parapet shall be set to a height of 1150mm. In accordance with Chapter 7.6 of BD 52/93 the spacing of vertical infill members on the footbridge and adjoining side ramps will not exceed 100mm.

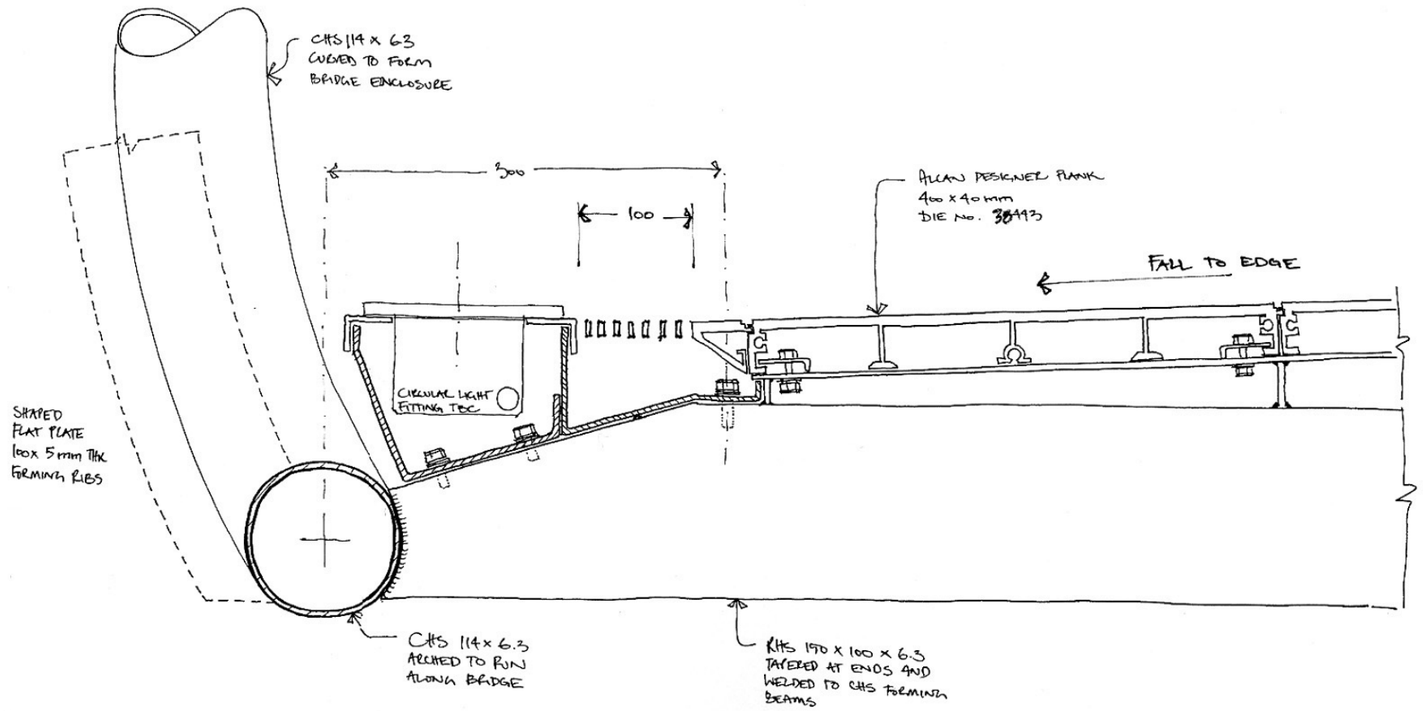

Detail
Section A-A

Product Example
Alcan designer plank

Walkway Surfaces

It is proposed to use a textured aluminium floor deck panel, with a textured surface for resistance to slip. Surface finishes for adjoining side ramps are to be agreed. All relevant information regarding installation date and minimum life expectancy of the surfacing or surfacing/waterproofing system shall be provided.

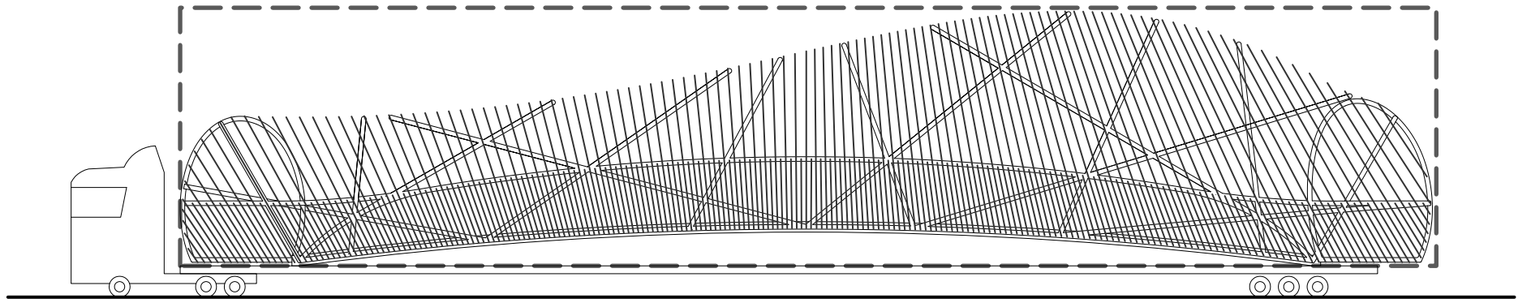

Side Elevation

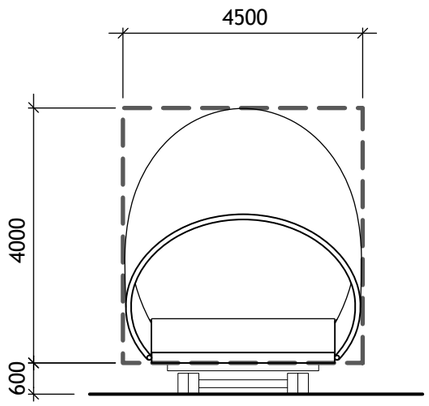

LOW LOADER REQUIRING
LIMITED ESCORT

POLICE ESCORT MAY BE REQUIRED
FOR LIMITED PARTS OF JOURNEY

End Elevation

Transport Dimension Diagrams

Transport

The proposed pedestrian footbridge will be designed to road transport dimensions, allowing the entire structure to be delivered, craned into location, and fixed as 1 piece. This will minimise disruption to traffic flow on Lee Bank Middleway and allows the possibility of turning the installation of the bridge into a community event.

Durability and Maintenance

Mild Steel Structure with Paint Finish

Generally for very long term anti-corrosion protection the principal bridge owners in the UK (HA and Network Rail) tend to prefer a metal coating plus a paint system. The metal coating is applied either by hot dip galvanizing the steelwork or by blast-cleaning it to an Sa3 surface standard and applying a coat of thermally sprayed metal (normally aluminium). An appropriate durable two pack coating system is then applied to the metal coating. Metal coating plus paint tends to be favoured in aggressive environments such as highly industrial and/or marine locations.

Alternatively the metal coating may be omitted, the surface blast-cleaned to an Sa2.5 surface standard and a high build coating system applied. Clearly this option is less costly but may incur slightly higher maintenance costs.

If we use Network Rail Protective Treatment Standard systems as examples then the following could be considered:

Protective Treatment N1

Blast-clean to Sa3 (BS 7079 : Part A1)
Thermally sprayed metal coating at 100um mdft Epoxy Sealer Coat at 25um dft High Build Epoxy Intermediate Coat at 150um dft Acrylic Urethane Finish at 50um dft

Service life to first major maintenance = 25-30 years.

Protective Treatment N9

Hot Dip Galvanize to BS EN ISO 1461
Mordant Wash
Epoxy MIO at 125um mdft
Acrylic Urethane Finish at 50um mdft

Service life to first major maintenance = 20-25 years.

Protective Treatment N2

Blast-clean to Sa2.5 (BS 7079 : Part A1) Blast Primer at 25um mdft Epoxy Glass Flake at 400um mdft Acrylic Urethane at 50um dft

Service life to first major maintenance = 20-25 years.

Protective Treatment N4

Blast-clean to Sa2.5 (BS 7079 : Part A1) Epoxy Blast Primer at 50um mdft Epoxy MIO at 125um mdft Epoxy Undercoat at 100um mdft Acrylic Urethane Finish at 50um mdft

Service life to first major maintenance = 18-22 years.

Whilst all 4 systems offer excellent protection against corrosion some minor maintenance may be required from around 12-15 years onwards. The major issue could be the performance of the finish coat, which although it has very good colour and gloss retention properties, will start to fade from around 12 years onwards. An alternative would be a coach finish as a replacement for the standard Network Rail Finish and this has superior colour and gloss retention properties

At the end of the respective service lives it will not be necessary to totally re-blast and paint the structure. Large areas will still be intact and therefore maintenance is likely to be confined to spot repairs followed by a full coat of finish for aesthetic purposes.

Due to the advantages of fabricating the bridge as a single unit for delivery and installation it will not be possible to use a hot dip galvanizing process. We therefore recommend the **Network Rail Protective Treatment Standard N2**.

Stainless Steel

While a satin finished stainless steel grade 316 option will omit the need for re-painting, a more intense cleaning regime will be required as staining will automatically occur if maintenance is not carried out on a 3 to 4 month basis. This would consist of a jet wash down with mild detergent.

Preliminary Analysis - Contour Model

Design Loads and Criteria in accordance with BS 5400

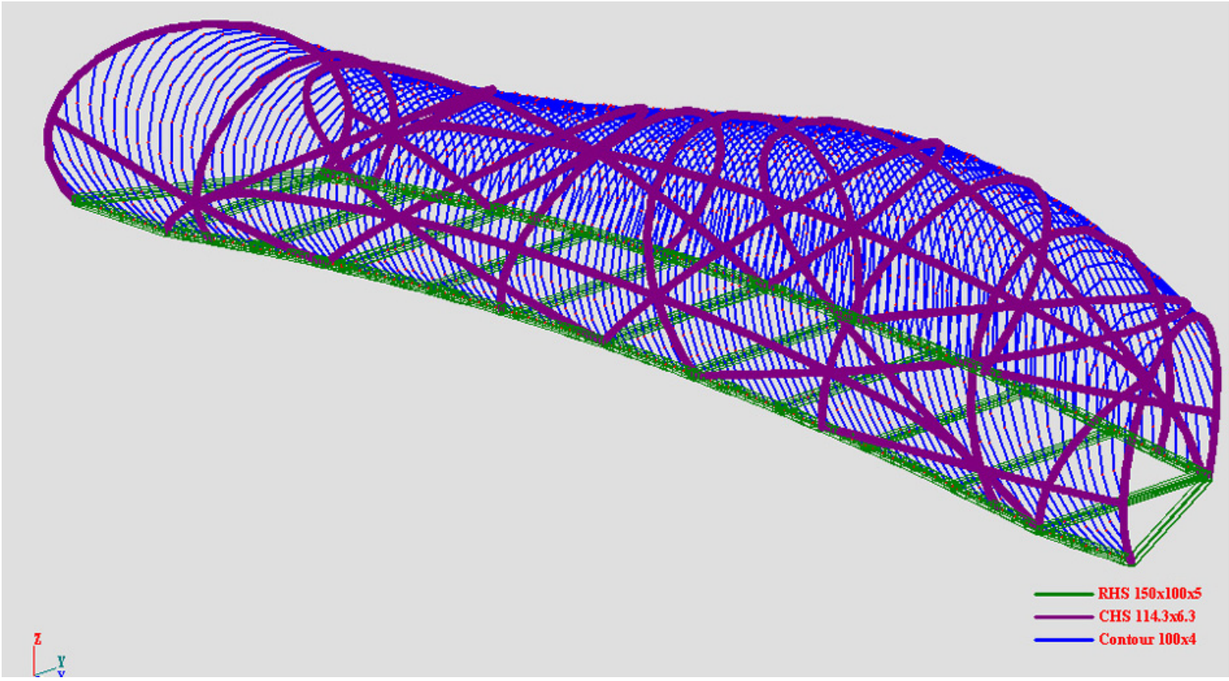

Scheme

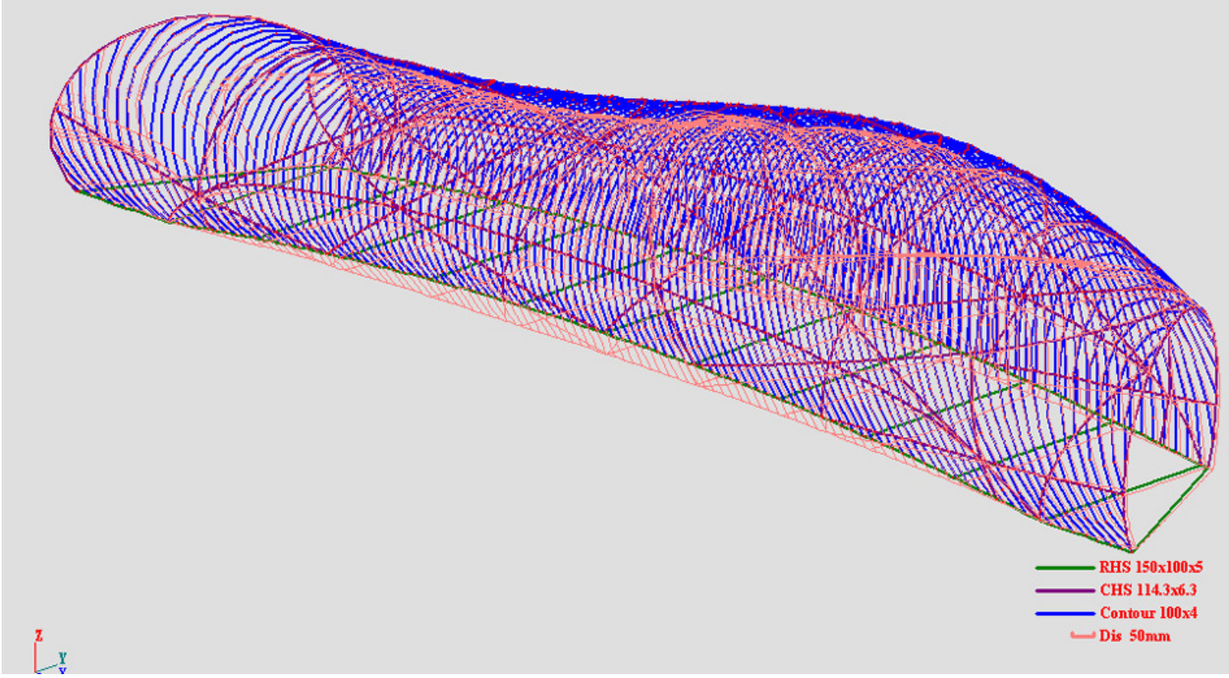

Displacement

Reactions

ROBOT v 15.0.0
Author:
Address:

© RoboBAT 1996-2001
File: **050214 contour model CTR lines1.rtd**
Project: 050214 contour model CTR lines1

in the coordinate system: global - Cases: 101

Filtering	Node	Case
Full list	2to4 6to10 13to1	1to3 101to103
Selection	9017 9018 9137	101to103
Total number	1968	6
Selected number	4	3

in the coordinate system: global - Cases: 101to103

Node/Case	FX (kN)	FY (kN)	FZ (kN)	MX (kNm)	MY (kNm)	MZ (kNm)
9017/ 101 (C	1.21	37.69	146.95	-0.00	0.00	0.00
9017/ 102 (C	0.78	24.62	95.83	-0.00	0.00	0.00
9017/ 103 (C	0.22	8.56	31.92	-0.00	0.00	0.00
9018/ 101 (C	-1.21	-37.91	155.66	-0.00	0.00	0.00
9018/ 102 (C	-0.78	-24.77	101.55	-0.00	0.00	0.00
9018/ 103 (C	-0.22	-8.60	34.13	0.00	-0.00	-0.00
9137/ 101 (C	0.00	38.33	149.28	-0.00	0.00	-0.00
9137/ 102 (C	0.00	25.10	97.57	-0.00	0.00	-0.00
9137/ 103 (C	0.00	9.20	34.18	0.00	0.00	0.00
9138/ 101 (C	0.00	-38.10	161.41	0.00	0.00	0.00
9138/ 102 (C	0.00	-24.96	105.59	0.00	0.00	0.00
9138/ 103 (C	-0.00	-9.16	37.65	0.00	-0.00	-0.00
Case 101 (C)	1.4DL+1.6LL					
Sum of val.	0.00	-0.00	613.30	0.00	0.00	0.00
Sum of reac.	0.00	-0.00	613.30	1066.45	-6329.39	-0.00
Sum of forc.	-0.00	-0.00	-613.30	-1066.45	6329.39	-0.00
Check val.	0.00	-0.00	0.00	0.00	-0.00	-0.00
Precision	4.41604e-007	8.08321e-017				
Case 102 (C)	1.0DL+1.0LL					
Sum of val.	0.00	-0.00	400.55	0.00	0.00	0.00
Sum of reac.	0.00	-0.00	400.55	696.27	-4138.55	-0.00
Sum of forc.	-0.00	-0.00	-400.55	-696.27	4138.55	-0.00
Check val.	0.00	-0.00	0.00	0.00	-0.00	-0.00
Precision	2.93670e-007	5.50238e-017				
Case 103 (C)	1.0DL					
Sum of val.	0.00	0.00	137.88	0.00	-0.00	-0.00
Sum of reac.	0.00	0.00	137.88	237.94	-1461.44	-0.00
Sum of forc.	-0.00	-0.00	-137.88	-237.94	1461.44	-0.00
Check val.	0.00	0.00	0.00	0.00	-0.00	-0.00
Precision	1.41338e-007	3.60299e-017				

Deck = 52.72 kN
Structure = 85.16 kN
DL = 137.88 kN

Maximum Forces

ROBOT v 15.0.0
Author:
Address:

© RoboBAT 1996-2001
File: **050214 contour model CTR lines1.rtd**
Project: 050214 contour model CTR lines1

- Cases: 101to103

Filtering	Bar	Case
Full list	3001to3899 400	1to3 101to103
Selection	3694 3695 3703t	101to103
Total number	2903	6
Selected number	182	3

- Cases: 101to103

	FX (kN)	FY (kN)	FZ (kN)	MX (kNm)	MY (kNm)	MZ (kNm)
MAX	506.68	23.27	9.72	1.70	9.99	4.81
Bar	3856	3780	3870	3819	3869	3884
Node	1907	911	1857	1324	1917	1705
Case	101 (C)	101 (C)	101 (C)	101 (C)	101 (C)	101 (C)
MIN	30.52	-23.11	-44.36	-1.75	-2.81	-4.65
Bar	3704	3727	3780	3867	3884	3836
Node	458	649	909	1695	1705	1334
Case	103 (C)	101 (C)	101 (C)	101 (C)	101 (C)	101 (C)

Maximum Displacements

- Cases: 102 103

Filtering	Node	Case
Full list	2to4 6to10 13to1	1to3 101to103
Selection	465 647 667 748	102 103
Total number	1968	6
Selected number	251	2

- Cases: 102 103

	UX (mm)	UY (mm)	UZ (mm)	RX (Deg)	RY (Deg)	RZ (Deg)
MAX	16.0	5.4	14.3	0.47	0.53	0.17
Node	9140	1582	9008	9131	9081	9117
Case	102 (C)	102 (C)	102 (C)	102 (C)	102 (C)	102 (C)
MIN	-0.0	-5.3	-51.4	-0.49	-0.48	-0.18
Node	9024	1917	9110	9132	9228	9065
Case	102 (C)	102 (C)	102 (C)	102 (C)	102 (C)	102 (C)

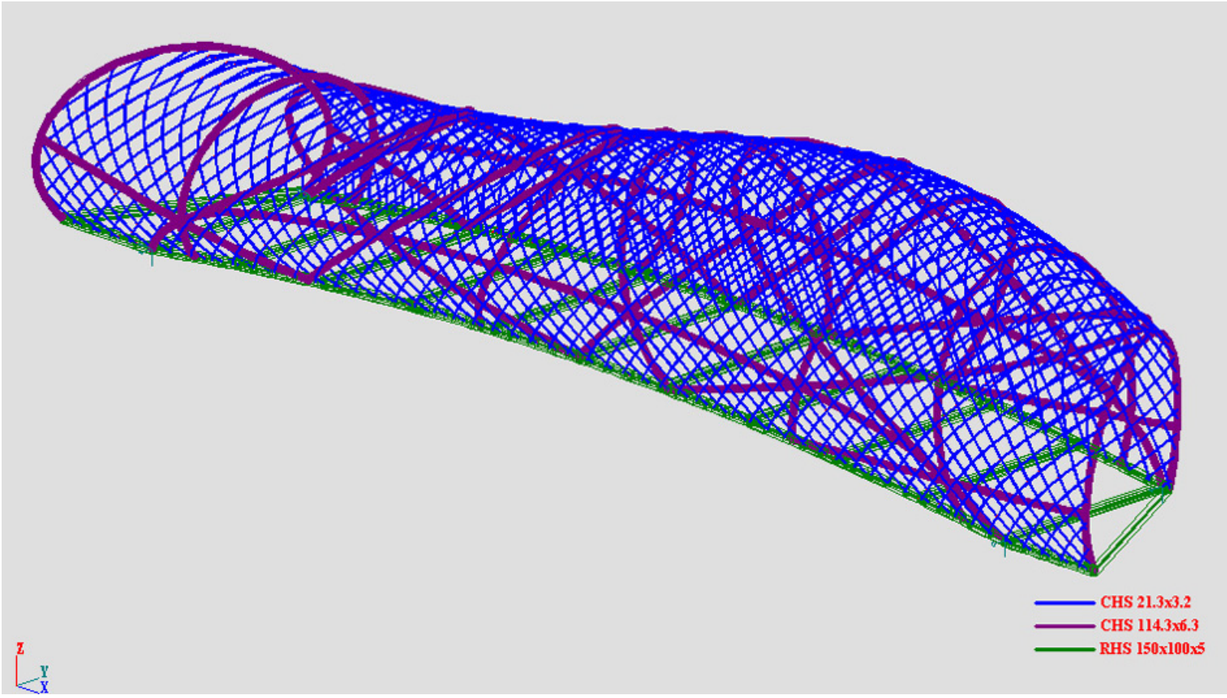

Scheme

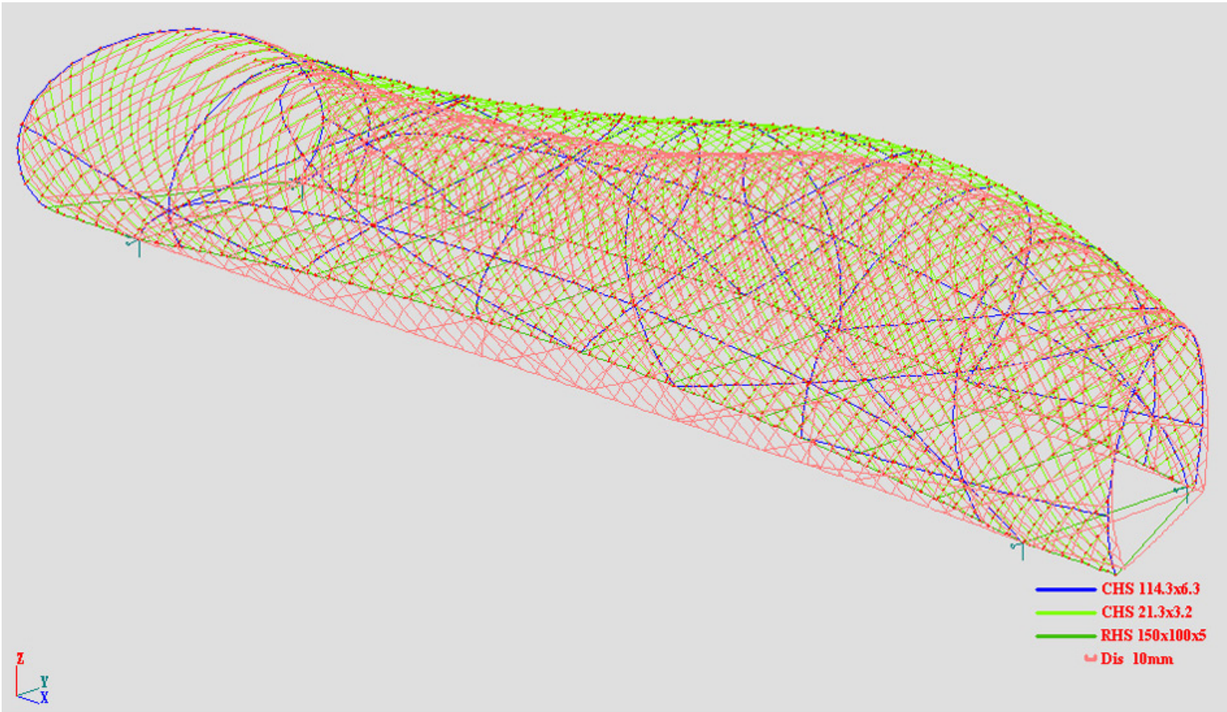

Displacement

Preliminary Analysis - Mesh Model

Natural Frequencies

In accordance with BS 5400 Part 2 Appendix C the following calculations for natural frequency have been undertaken:

Fundamental natural frequency (fo)

fo = 2.81 Hz

If fo 5Hz check the maximum vertical acceleration. (a)

a shall be limited to 0.5√fo

a = 0.51 m/s²

0.5√fo = 0.84

a < 0.5√fo

Therefore: vibration serviceability requirement is satisfied

Preliminary Analysis - Mesh Model

Reactions

ROBOT v 15.0.0
Author:
Address:

© RoboBAT 1996-2001
File: **050225 mesh model ctr lines.rtd**
Project: 050225 mesh model ctr lines

in the coordinate system: global - Cases: 101

Filtering	Node	Case
Full list	59 61to93 95to1	1to3 101to103 2
Selection	3003 3004 3055	101 102 201
Total number	2811	7
Selected number	4	3

in the coordinate system: global - Cases: 101 102 201

Node/Case	FX (kN)	FY (kN)	FZ (kN)	MX (kNm)	MY (kNm)	MZ (kNm)
3003/ 101 (C	-0.00	26.02	93.56	0.00	0.00	-0.00
3003/ 102 (C	-0.00	8.62	30.47	0.00	0.00	0.00
3003/ 201 (C	-0.00	39.91	143.61	0.00	0.00	-0.00
3004/ 101 (C	0.00	-25.86	101.41	-0.00	0.00	0.00
3004/ 102 (C	-0.00	-8.58	33.17	0.00	0.00	-0.00
3004/ 201 (C	0.00	-39.66	155.62	-0.00	0.00	0.00
3055/ 101 (C	-0.87	-26.85	97.72	-0.00	-0.00	-0.00
3055/ 102 (C	-0.25	-8.51	30.60	-0.00	-0.00	0.00
3055/ 201 (C	-1.34	-41.25	150.23	-0.00	-0.00	-0.00
3056/ 101 (C	0.87	26.69	93.11	-0.00	-0.00	0.00
3056/ 102 (C	0.25	8.46	28.89	-0.00	-0.00	-0.00
3056/ 201 (C	1.34	41.00	143.20	-0.00	-0.00	0.00
Case 101 (C)	1.0DL + 1.0 LL					
Sum of val.	0.00	-0.00	385.80	0.00	0.00	-0.00
Sum of reac.	0.00	-0.00	385.80	672.03	4495.17	0.00
Sum of forc.	-0.00	-0.00	-385.80	-672.03	-4495.16	0.00
Check val.	0.00	-0.00	0.00	0.00	0.00	0.00
Precision	3.05393e-005	3.47691e-012				
Case 102 (C)	1.0DL					
Sum of val.	0.00	-0.00	123.13	0.00	0.00	0.00
Sum of reac.	0.00	-0.00	123.13	213.70	1407.28	0.00
Sum of forc.	-0.00	-0.00	-123.13	-213.70	-1407.28	0.00
Check val.	0.00	-0.00	0.00	0.00	0.00	0.00
Precision	1.59257e-005	2.21723e-012				
Case 201 (C)	1.4DL + 1.6LL					
Sum of val.	0.00	-0.00	592.65	0.00	0.00	-0.00
Sum of reac.	0.00	-0.00	592.65	1032.51	6910.82	0.00
Sum of forc.	-0.00	-0.00	-592.65	-1032.51	-6910.81	0.00
Check val.	0.00	-0.00	0.00	0.00	0.01	0.00
Precision	4.56778e-005	5.11960e-012				

Deck □ □ =□ 52.72 kN
Structure□ □ =□ 70.41 kN
DL□ □ □ = 123.13 kN

Maximum Forces

ROBOT v 15.0.0
Author:
Address:

© RoboBAT 1996-2001
File: **050225 mesh model ctr lines.rtd**
Project: 050225 mesh model ctr lines

- Cases: 1to3 101to103 201

Filtering	Bar	Case
Full list	1to13 1001to516	1to3 101to103 2
Selection	7760to7933	1to3 101to103 2
Total number	5354	7
Selected number	174	7

- Cases: 1to3 101to103 201

	FX (kN)	FY (kN)	FZ (kN)	MX (kNm)	MY (kNm)	MZ (kNm)
MAX	475.53	10.34	19.30	1.63	4.16	3.14
Bar	7888	7908	7908	7929	7895	7796
Node	735	524	758	790	494	425
Case	201 (C)	201 (C)	201 (C)	201 (C)	201 (C)	201 (C)
MIN	7.23	-11.17	-96.86	-1.46	-1.60	-3.17
Bar	7760	7823	7907	7844	7839	7914
Node	589	654	757	683	670	764
Case	2	201 (C)	201 (C)	201 (C)	201 (C)	201 (C)

Maximum Displacements

- Case: 101 (1.0DL + 1.0 LL)

Filtering	Node	Case
Full list	59 61to93 95to1	1to3 101to103 2
Selection	59 61to93 95to1	101
Total number	2811	7
Selected number	2811	1

- Case: 101 (1.0DL + 1.0 LL)

	UX (mm)	UY (mm)	UZ (mm)	RX (Rad)	RY (Rad)	RZ (Rad)
MAX	22.6	10.2	15.5	0.018	0.010	0.009
Node	2715	1525	2745	2279	2476	1722
Case	101 (C)	101 (C)	101 (C)	101 (C)	101 (C)	101 (C)
MIN	-8.9	-11.5	-44.8	-0.018	-0.008	-0.009
Node	1010	1543	3108	2252	1688	1712
Case	101 (C)	101 (C)	101 (C)	101 (C)	101 (C)	101 (C)

Mild Steel with Paint Finish

COMPANY: M-TEC DESCRIPTION	COST £
MATERIAL	43.000.00
PROJECT TIME	17.000.00
LABOUR TO BUILD	37.000.00
TRANSPORT	4.000.00
CRANAGE INSTALATION	3.500.00
LABOUR ON SITE	9.000.00
BALUSTRADE	14.500.00
PAINT SPECIFICATION	15.000.00
TOTAL (EX VAT)	**143.000.00**

COMPANY: LITTLE HAMPTON WELDING	COST £
ARCHES & DECK STRUCTURE	128.500.00
SECONDARY RIBS	233.000.00
ALUMINIUM DECKING	38.500.00
TRANSPORT	3.000.00
ERECTION & LABOUR	9.500.00
BALUSTRADE	36.000.00
PAINT SPECIFICATION	28.500.00
TOTAL (EX VAT)	**477.000.00**

Stainless Steel

m-tec
To construct the bridge in 316 stainless steel will add £223.000.00 extra cost on top of the mild steel bringing the project up to **£366.000.00**

Little Hampton Welding
To provide the above in satin finished stainless steel grade 316 will roughly add 50% to the above total, i.e. **£750.000.00**

Lighting

COMPANY: LIGHTING DESIGN INTERNATIONAL DESCRIPTION	COST £ / METRE	LINEAR METRES	COST £
BLUE CURVED COLD CATHODE TUBING Spine & Gateways (in protective housing by others)	90.00	42	3.780.00
WHITE COLD CATHODE Handrail (in tubular extrusion by others)	90.00	97	8.730.00
WHITE OR BLUE LED INDICATOR LIGHTS Floor recessed	200.00	43	8.600.00
SPOTLIGHT ALLOWANCE			2.000.00
FEES (inc. schematic design, detail development, contract documentation, construction administration)			13.000.00
TOTAL (EX VAT)			**36.110.00**

Sutton Vale have indicated a budget cost of £35.000.00 to £45.000.00 for fees and lighting allowance.

Indicative Costs

Steel Fabrication

Indicative budget costing has been provided by m-tec and Little Hampton Welding.

Lighting

Indicative budget costing has been provided by Lighting Design International and Sutton Vale Associates.

Indicative Program

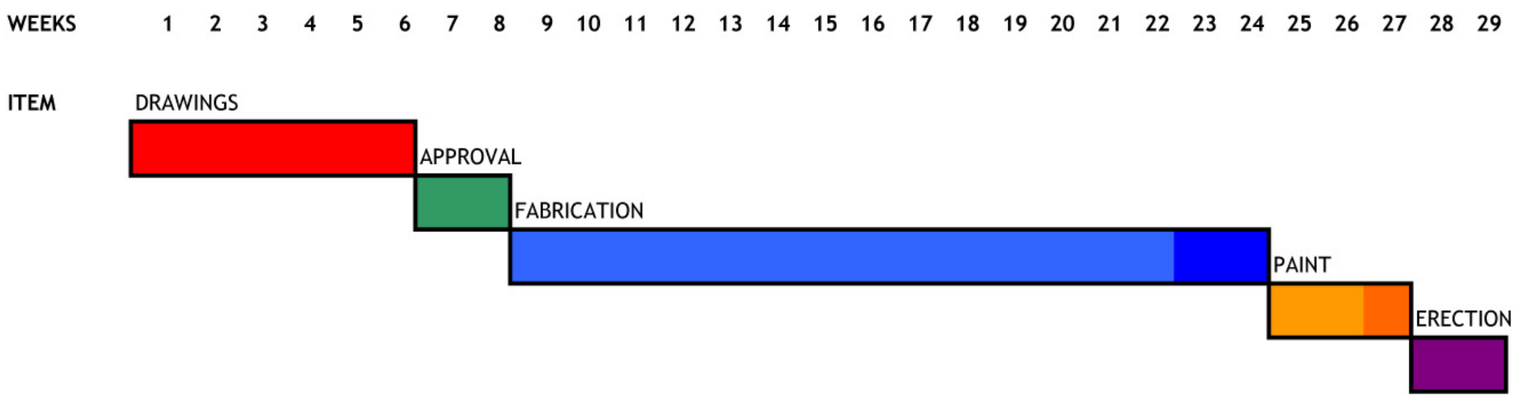

Note: Drawing time is subject to change following the provision of more detailed information

An additional 2 week allowance has been included in the fabrication time frame (14-16 weeks)

Depending on final selection of paint finish, an allowance of 2-3 weeks has been allocated