BRYAN CAVE

Bryan Cave LLP
1290 Avenue of the Americas
New York, NY 10104-3300
Tel (212) 541-2000
Fax (212) 541-4630
www.bryancave.com

Bryan Cave Offices
Atlanta
Charlotte
Chicago
Dallas
Hamburg
Hong Kong
Irvine
Jefferson City
Kansas City
London
Los Angeles
New York
Paris
Phoenix
San Francisco
Shanghai
Singapore
St. Louis
Washington, DC

Bryan Cave International Trade
A TRADE CONSULTING SUBSIDIARY OF NON-LAWYER PROFESSIONALS
www.bryancavetrade.com
Bangkok
Beijing
Jakarta
Kuala Lumpur
Manila
Shanghai
Singapore
Tokyo

BSA No. 299-82-BZ
2-26 Stanton Street, a/k/a 207-21 Chrystie Street
Borough of Manhattan Block 427, Lots 2 and 200

STATEMENT OF FACTS

Introduction

Bryan Cave LLP submits this application on behalf of Chrystie Land Associates LLC, the owner of the Tax Lot 200 portion of the subject zoning lot (the "Owner"), pursuant to Section 1-05(a) of the Board of Standards and Appeals ("BSA" or the "Board") Rules of Practice and Procedure for a minor amendment to the above-noted Board resolution, dated November 16, 1982 (the "1982 Approval"), which granted a variance of the applicable height and setback regulations to allow portions of a nine-story multiple dwelling (the "Existing Building"), located on the Tax Lot 2 portion of the subject zoning lot, to penetrate the sky exposure plane.

The Owner proposes to develop an approximately 195,500 square foot, 25-story, as-of-right mixed use building (the "New Building") on the unimproved, Tax Lot 200 portion of the subject zoning lot. No variance of any requirement of the Zoning Resolution is required for the New Building and none is therefore requested by this application. Likewise, no change to the variance granted by the 1982 Approval is required or requested.

The sole purpose of the minor amendment requested by this application is to substitute the site plan submitted with this application for the site plan approved by the 1982 Approval. Accordingly, the question presented by this application is whether the findings made by the Board in granting the 1982 approval are affected by the proposed changes to the site plan.[1]

[1] *Saint. Francis Xavier/Clothing Workers Center*, BSA No. 1149-62-BZ, June 24, 2008, aff'd, 2010 N.Y. App. Div. LEXIS 1848 (N.Y. App. Div. 1st Dep't, March 11, 2010). *See also, 120 West 25th Street,* BSA No. 885-78-BZ, March 17, 2009.

Background/History

In January 1970, the City of New York, acting through the Department of Housing Preservation and Development ("HPD"), established the Cooper Square Urban Renewal Plan ("URP") for a five block area between Bowery and Second Avenue/Chrystie Street from East 5th Street on the north to Stanton Street on the south (the Cooper Square Urban Renewal Area). The Zoning Lot was designated in the URP as part of Site 1.

On May 5, 1982, the City Planning Commission approved two Uniform Land Use Review Procedure ("ULURP") applications related to the Zoning Lot, both of which were submitted by HPD: (1) N 820758 HCM for a minor change to the Cooper Square URP to divide Site 1 into Sites 1A and 1B (the Zoning Lot); and (2) C 820681 HPM for (a) a project and plan for the development of the Zoning Lot, and (b) land disposition of the Zoning Lot to a developer to be designated by HPD. The applications were subsequently approved by the Board of Estimate on June 11, 1982.

Under the approved project and plan, the Zoning Lot was to be developed with an apartment building financed by the New York City Housing Development Corporation ("HDC"), insured by United States Department of Housing and Urban Development ("HUD"), and receiving federal Section 8 rent subsidies for eligible tenants.

Following City Planning Commission approval of the ULURP applications, on May 17, 1982, Glick Development Associates, a redevelopment company organized under the New York State Private Housing Finance Law, acting for HPD, filed BSA application No. 299-82-BZ for a variance of the applicable height and setback regulations for a portion of the then-proposed Existing Building, a nine-story apartment building, to allow "a minor intrusion into the sky exposure plane" of portions of the upper stories (the "1982 Application").[2] As noted above, by the 1982 Approval, the Board approved the application on November 16, 1982.

In 1984, the City of New York (the "City") conveyed the Zoning Lot to Cooper Square Associates by deed dated January 16, 1984, and recorded in the Office of the City Register of the City of New York on January 27, 1984, at Reel 759 Page 880. In 1985, HDC and Cooper Square Associates entered into a housing assistance payments contract (the "HAP Contract") with HUD, by which Cooper Square Associates, for itself and its successors and assigns, agreed to maintain the Existing Building as Section 8 housing for a term of 20 years.[3]

---

[2] As originally filed, the 1982 Application also requested a modification of the applicable accessory residential parking requirement. However, the application was subsequently revised to provide the required parking and to remove the requested parking variance.

[3] The HAP Contract was renewed for a five year term in 2005 and again for another five year term in 2010.

Following the 1982 Approval, the Existing Building was developed on the Tax Lot 2 portion of the Zoning Lot.[4] The remainder of the Zoning Lot contained an accessory residential parking lot for 20 cars and landscaped open space. The development was completed in 1986. In 2009, Tax Lot 1 was subdivided into Tax Lots 2 and 200, with Tax Lot 2 containing the Existing Building and small portions of the parking lot and open space, and Tax Lot 200 containing most of the parking lot and open space. The Cooper Square URP expired on February 13, 2010, all of the urban renewal sites having been developed in accordance with the URP. The obligation to maintain the Existing Building as Section 8 housing will expire on June 25, 2015.

Zoning Regulations

The Zoning Lot is located within a C6-1 zoning district – the same as in 1982. C6-1 zoning districts allow a broad range of commercial uses, including office buildings and hotels, at a maximum floor area ratio ("FAR") of 6.0. For residential uses, C6-1 districts are an R7 equivalent. The R7 zoning district is a "height factor" district, which allows a residential FAR ranging from 0.87 to 3.44, depending on the building's "height factor" (a ratio equal to the residential floor area divided by the total residential lot coverage). For each height factor, a maximum FAR is permitted and a minimum open space ratio ("OSR") is required. As a general rule, the taller the building, the greater the amount of open space required. At the maximum permitted 3.44 FAR, the required OSR is 22, meaning that the required open space on the zoning lot would be 22 percent of the residential floor area. Under the C6-1 zoning regulations, the Zoning Lot could be developed with a maximum of 342,801 square feet of total floor area (6.0 FAR), of which a maximum of 196,544 square feet (3.44 FAR) could be residential. Currently, the Zoning Lot is developed with 146,484 square feet (2.56 FAR) of residential floor area in the Existing Building.

Description of the New Building

The New Building will be a 25-story, mixed use building containing a hotel on floors 1-18 and residential apartments on floors 19-25. The New Building will be fully complying with all applicable use and bulk regulations of the Zoning Resolution, including floor area and FAR, height, setback and open space. The New Building will contain approximately 195,500 square feet of floor area, of which approximately 162,150 square feet will be commercial floor area (Use Group 5 hotel) and approximately 33,370 square feet will be residential floor area. Including the floor area in the Existing Building, the New Building and the Zoning Lot will be in full compliance with the residential and commercial floor areas and FARs permitted as-of-right

[4] At the time of the 1982 Approval, the Zoning Lot comprised Tax Lots 1, 47-51 and parts of Tax Lots 4 and 27. It was subsequently merged into Tax Lot 1 prior to development of the Existing Building. In 2009, Tax Lot 1 was subdivided into Tax Lots 2 and 200.

by the C6-1 district. The Zoning Lot will contain 162,150 square feet (2.84 FAR) of commercial floor area and 179,851 square feet (3.15 FAR) of residential floor area for a total of 342,001 square feet (5.99 FAR) – fully complying and as-of-right under the existing C6-1 zoning with respect to floor area and FAR.

As indicated on Drawing Z-002.00, the Zoning Lot will provide a total of 34,480 square feet of open space, slightly more than required by the applicable OSR.

As shown on the Site Plan on Drawing Z-001.00, submitted with this application, a subway tunnel for the Sixth Avenue B and D lines runs beneath the portion of the Project Site closest to Chrystie Street. To avoid construction above or near the subway tunnel, the street wall of the New Building is located approximately 66 feet from Chrystie Street. For this reason, as shown on Drawing Z-004, the New Building, at 350 feet to the top of the mechanical bulkhead (330 feet to the roof of the 25th story), fits well within both the Chrystie Street and Stanton Street sky exposure planes and is therefore fully complying and as-of-right under the existing C6-1 zoning with respect to height and setback.

Accordingly, this application requests no modifications of any zoning requirements for the New Building – nor does it request any increase or change to the variance of the height and setback regulations granted for the Existing Building. The sole purpose of the minor amendment requested by this application is to substitute the site plan submitted with this application for the site plan approved by the 1982 Approval.

The Findings

As set forth in Section 72-21 of the Zoning Resolution, in order to grant a variance, the Board must make each and every one of the required findings. Except as noted below, the Board did not address the individual findings in the 1982 Approval, noting only that "the board has determined that the evidence in the record supports the findings required to be made under Section 72-21 of the Zoning Resolution, and that the applicant is therefore entitled to relief on the grounds of practical difficulty and unnecessary hardship."

(a) that there are unique physical conditions, including irregularity, narrowness or shallowness of lot size or shape, or exceptional topographical or other physical conditions peculiar to and inherent in the particular zoning lot; and that, as a result of such unique physical conditions, practical difficulties or unnecessary hardship arise in complying strictly with the use and bulk provisions of the Resolution; and that the alleged difficulties or unnecessary hardship are not due to circumstances created generally by the

strict application of such provisions in the neighborhood in which the zoning lot is located.

In the 1982 Approval, the Board noted that "the site is encumbered by a subway easement which restricts the placement of the building to one portion of the site." The subway tunnel restricted the placement of the then-proposed Existing Building because, as noted in the 1982 Application, the Existing Building was proposed to be developed using "concrete plank and bearing wall" construction. Such construction utilizes a concrete slab and footings, which could not be constructed above a subway tunnel. Construction of the Existing Building above the subway tunnel would have required an entirely different method of construction, including the driving of piles on either side of the tunnel on which steel columns would be erected to support steel beams spanning the tunnel – which would have been prohibitively expensive and therefore not possible given the fiscal constraints imposed by the HDC financing, the HUD insurance requirements and the Section 8 program requirements.

Evidence of the existence of the subway tunnel was provided in the 1982 Application by a topographic survey, which, as noted above, the Board found supported the finding. The subway tunnel – and, therefore, the unique physical condition – still exists. As a result, the practical difficulties and unnecessary hardship also still exist. Therefore, the finding of the Board in the 1982 Approval that there are unique physical conditions, as a result of which practical difficulties and unnecessary hardships arise in strictly complying with the height and setback regulations as applicable to the Existing Building, is not implicated or affected by the proposed changes to the site plan.

(b) that because of such physical conditions there is no reasonable possibility that the development of the zoning lot in strict conformity with the provisions of this Resolution will bring a reasonable return, and that the grant of a variance is therefore necessary to enable the owner to realize a reasonable return from such zoning lot; this finding shall not be required for the granting of a variance to a non-profit organization.

The 1982 Application stated that absent the requested variance of the height and setback regulations for portions of the Existing Building's street wall, development of the Existing Building would be financially infeasible. As a subsidized Section 8 housing project, the construction cost of the Existing Building exceeded the statutory maximum mortgage insurable by HUD. The HUD-insured mortgage had a lower than typical loan-to-value ratio, therefor burdening the owner with an excessive equity requirement. Accordingly, the Board found that this finding was met.

In *Bella Vista v. Bennett*, 89 N.Y.2d 565 (1997), a copy of which is attached hereto as Exhibit A, the New York Court of Appeals held that transfers of unused development rights from a property for which a variance had been previously granted require discrete BSA review and approval, reversing the lower courts and upholding the determination of the Department of Buildings, affirmed on appeal by the BSA, that the zoning lot merger and transfer "affects the basis of the Board's variance grant"[5] and therefore required BSA approval.

Accordingly, in *120 West 25th Street*, BSA No. 885-78-BZ, March 17, 2009, a copy of which is attached hereto as Exhibit B, the owner requested discrete BSA review and approval of its proposal to transfer unused development rights to an adjacent property which had been merged with the subject property. In 1979, the Board had granted a use variance for the subject property to allow a residential conversion in an M1 zoning district. In this case, the Board found "that the differences in timing and in the health of the respective real estate markets distinguish the Bella Vista case from the instant case," and thereby supported the Board's determination "that the proposed transfer of development rights does not implicate or affect the basis for its findings in general, and specifically the (b) and (e) finding, at the time that they were made."[6]

One of the key facts distinguishing *120 West 25th Street* from *Bella Vista* was that in *Bella Vista*, the application proposing to transfer unused floor area was filed only three years after the Board had granted the original variance, whereas in *120 West 25th Street*, the application to amend the original variance was filed 30 years after the variance was granted. In this respect, the facts of the instant case are the same as in *120 West 25th Street*; it is now 30 years since the 1982 Approval.

Another key fact distinguishing *120 West 25th Street* from *Bella Vista* noted by the Board was that in *Bella Vista*, "the community surrounding the site in question was economically vibrant and the value of development rights was... likely to be contemplated by the Board," whereas in *120 West 25th Street*, "at the time of the Board's [1979] grant... there was no demand for and therefore no value to the development rights appurtenant to any of the properties in the area." Accordingly, the Board found, "the owner of the subject site could not have anticipated [in 1979] that its appurtenant unused development rights had any value."[7] In this respect also, the facts of the instant case are the same as in *120 West 25th Street*.

In 1982, the community surrounding the Project Site was economically depressed, with no new development or economic investment in many years prior to the adoption of the Cooper Square URP in 1970. In fact, the URP was necessitated by the fact that real estate in the area had

---

[5] *Bella Vista*, 89 N.Y.2d at 468.

[6] *120 West 25th Street* (BSA No. 885-78-BZ).

[7] *Ibid.*

no value sufficient to induce private investment and development. Even in the 1961 *Alternate Plan for Cooper Square*, prepared by the Cooper Square Committee, which characterized the area far more positively than did the City's original 1959 urban renewal proposal, the area was shown to contain numerous vacant lots, homeless shelters and single room occupancy hotels. According to the report, "Much of Cooper Square is run down, some of it in far worse condition than the average old-law tenement area... and much of it is so badly deteriorated that a few buildings are torn down every year."[8] The area south of Houston Street, within which the Project Site is located, was characterized as having "widely separated, small groups of tenements and isolated buildings... which [are] dilapidated... and marginal as housing." Neighborhood stores were described as able to "barely eke out a living" amidst the "squalid surroundings."[9] Not much had changed even 20 years later when the 1982 Application described the then-proposed Existing Building as being "the first new residential development in the neighborhood." Clearly, as in *120 West 25th Street*, "there was no demand for and therefore no value to the development rights appurtenant to any of the properties in the area."

As noted above, in *120 West 25th Street*, the Board found that the proposed use of the subject property's excess development rights "does not implicate or affect the basis for its findings in general, and specifically the (b) and (e) findings," because – as the Board noted – the use variance merely "put the owner on substantially the same economic footing as other properties within the same zoning district that were not similarly burdened with a unique physical condition and <u>*which retained their full development rights*</u>" [emphasis added]. Accordingly, "equalizing the economic status of the two classes of properties would not have required that the subject site be stripped of its excess development rights."[10]

The same analysis applies in the instant case. The grant of the height and setback waivers for the Existing Building in 1982, merely put the Project Site's owner on an equal footing with the owners of other properties in the surrounding area which did/do not have a subway tunnel running beneath them, creating practical difficulty and unnecessary hardship in constructing a concrete plank and bearing wall building. Doing so did not require that the Project Site's excess development rights be stripped away because they had no value – which was also the case with regard to the excess development rights of all the other properties in the surrounding area, all of which, as the Board aptly noted, "retained their full development rights." Accordingly, the Board may reach the same conclusion here: because (a) 30 years have elapsed since the original variance grant and (b) the surrounding Cooper Square area was so economically depressed in 1982 that the unused development rights had no value and were

---

[8] *Alternate Plan for Cooper Square*, Cooper Square Community Development Committee, July 31, 1961, p. 15.

[9] *Ibid.*

[10] *120 West 25th Street*, BSA No. 885-78-BZ.

unlikely to have been contemplated by the Board in granting the variance, development of the New Building on the Project Site utilizing the previously unused development rights will not implicate or affect the basis of the Board's findings generally and specifically with respect to this finding (b).

(c) that the variance, if granted, will not alter the essential character of the neighborhood or district in which the zoning lot is located; will not substantially impair the appropriate use or development of adjacent property; and will not be detrimental to the public welfare.

As stated in the 1982 Application, the requested modification of the height and setback regulations to allow the Existing Building to penetrate the sky exposure plane would enable "the first new residential development in the neighborhood," which would "enhance the essential residential character of the neighborhood and the use or development of adjacent property." While the Board did not specifically address this finding in its Resolution of approval, because the Board resolved generally that each and every one of the findings was met, it may be assumed that the Board therefore found that the variance would not alter the essential character of the neighborhood or impair the use or development of adjacent property.

The surrounding neighborhood has materially changed since 1982. Although the Existing Building may have been the first new residential development in the area, it was by no means the last. Since 1982, there have been numerous new developments in the neighborhood, commercial as well as residential.

- Directly adjacent to the north of the Project Site, a 14-story mixed use building was constructed in 2003 on the former Site 1A of the Cooper Square URP, which contains a large Whole Foods food store on the first and second floors and 360 residential apartments (20% affordable, 80% market rate).

- One block to the north, on the former Site 2 of the Cooper Square URP, a nine-story, mixed use building with ground floor commercial use and 206 residential apartments (20% affordable, 80% market rate) was developed in 2005 on the south side of East 1st Street (Block 456, Lot 7).

- Also on the former Site 2, a seven-story mixed use building with ground floor commercial use and 90 residential apartments (20% affordable, 80% market rate) was developed in 2007 on the north side of East 1st Street (Block 457, Lot 28).

- Just north of the former Site 2, a 12-story building, approximately 156,365 square foot building was developed in 2001 at 1 East 2nd Street (Block 427, Lot 9). The building provides 212 dormitory rooms for New York University.

- On East Houston Street, within three blocks of the Project Site, new market rate mixed use buildings with ground floor commercial use and residential apartments above were developed at:
  - 303 Elizabeth Street (12 stories, 187,368 square feet, 195 apartments);
  - 65 East Houston Street (10 stories, 92,088 square feet, 162 apartments); and
  - 298 Mulberry Street (12 stories, 86,746 Square feet, 96 apartments).
- Two blocks south of the Project Site, a 16-story, approximately 121,000 square foot mixed use building containing 55 apartments and several ground floor stores was developed in 2005 at 140 Forsythe Street at the northeast corner with Delancey Street (Block 420, Lot 40).

Significantly, recent new developments in the surrounding area include a number of new hotels:

- The Bowery Hotel (16 stories, approximately 90,400 square feet) was developed in 2003 on a site formerly occupied by a service station and parking garage at the southeast corner of Bowery and East 3rd Street (Block 458, Lot 6).
- The Standard Hotel (21 stories, approximately 85,000 square feet) was developed in 2006 two blocks further north of The Bowery Hotel at 25 Cooper Square.
- The Thompson LES Hotel (20 stories, approximately 108,513 square feet) was developed in 2005 at 190 Allen Street between Houston Street and Stanton Street, three blocks east of the Project.
- The Hotel on Rivington (20 stories, approximately 59,000 square feet) was developed in 2003 at 107 Rivington Street four blocks east of the Zoning Lot.

In addition to such major new developments, there have been a significant number of smaller new developments and rehabilitations of existing buildings throughout the Lower East Side, SoHo, NoHo, Cooper Square and East Village neighborhoods. On all major streets and avenues, especially on Bowery and Second Avenue south of St. Mark's Place and all across Houston Street, many once vacant ground floor store fronts have reopened with new stores and restaurants serving the thousands of new residents and visitors to the area.

The essential character of the neighborhood is no longer primarily residential as described in the 1982 Application. It is now a mixed use neighborhood that is active nearly 24 hours a day, seven days a week. Also, whereas in 1982, the neighborhood was largely

characterized by four to six story, primarily older buildings, with the addition of many new buildings of 10 and 12 stories and some of 20 stories or more, including but not limited to the ones describe above, the neighborhood can no longer be characterized as a primarily low-rise neighborhood. Given that almost all of the new buildings developed in the area since 1982 have been taller than the buildings that existed at that time, a tall building such as the New Building is not out of context with the current, taller built form of neighborhood.

(d) that the practical difficulties or unnecessary hardship claimed as a ground for a variance have not been created by the owner or by a predecessor in title.

As stated in the 1982 Application, and as found by the Board in the 1982 Approval, the practical difficulties and unnecessary hardship in constructing a concrete plank and bearing wall building were a result of the presence of the subway tunnel, the fiscal constraints resulting from the HUD financing requirements, the Section 8 program requirements and what was at that time "City policy as to building height." The tunnel and the HUD and Section 8 requirements still exist and although City policy as to building height may have changed since 1982, the Existing Building was approved and constructed in accordance with the policy in effect at the time, none of which were created by the owner or any predecessor in interest.

(e) that within the intent and purposes of this Resolution, the variance, if granted, is the minimum variance necessary to afford relief.

The only variance required or requested for the Zoning Lot is that of the 1982 Approval to allow a "minor intrusion into the sky exposure plane." The New Building does not require and therefore this application does not request any modification of any applicable requirement of the Zoning Resolution. As described above and as shown on the Drawings submitted with this application, the New Building is in full compliance with all applicable requirements of the C6-1 zoning district. Nor are any modifications to the variance granted by the 1982 Approval required or requested.

As discussed above with respect to the (b) finding, the instant case is similar in key respects with the case of *120 West 25th Street*. There, as here, an amendment of the original variance was requested to allow a new development on the same zoning lot, utilizing development rights that were unused under the original variance. There, as here, 30 years elapsed between the original variance and the requested amendment. And there, as here, at the time of the original variance grant, the surrounding area was economically depressed so that the unused development rights had no value and were unlikely to have been contemplated by the Board in granting the variance. Accordingly, in *120 West 25th Street*, the Board determined that

the proposed use of the subject property's excess development rights "does not implicate or affect the basis for its findings in general, and specifically the (b) and (e) findings."

The instant case is also similar in key respects with *Saint Francis Xavier/Clothing Workers Center*, BSA No. 1149-62-BZ, June 24, 2008. In that case, as in both *Bella Vista* and the instant case, an amendment was requested to allow a new development on the same zoning lot, utilizing development rights that were unused under the original variance. Also similar to *Bella Vista* and the instant case, in *Saint Francis Xavier*, the requested amendment was made a substantial number of years (45) after the grant of the original variance. Unlike *Bella Vista* and the instant case, the (b) finding was not required to be made for the original variance grant because the owner in *Saint Francis Xavier* was a not-for-profit organization. However all the other findings, including this (e) finding, were required and were made by the Board. In approving the amendment to the original *Saint Francis Xavier* variance, the Board noted that "the waivers and conditions of the underlying grant are not implicated" for the reasons that the new development required no new waivers or modification of the original waivers and "the configuration of the other buildings on the zoning lot will remain the same." In the instant case, the configuration of the Existing Building will also remain the same.

On facts similar to *120 West 25th Street* and *Saint Francis Xavier*, the Board may here make the same determination: development of the New Building on the Project Site utilizing the previously unused development rights will not implicate or affect the basis of the Board's findings generally and specifically with respect to this finding (e) because (i) 30 years have elapsed since the original variance grant, (ii) the surrounding Cooper Square area was so economically depressed in 1982 that the unused development rights had no value and were unlikely to have been contemplated by the Board in granting the original variance, (iii) no new variances and no changes to the original variance are required, and (iv) except for the addition of rooftop open space, the configuration of the Existing Building will remain the same.

Substantial Conformance and Scope of 1982 Approval

In the 1982 Approval, the Board granted the variance requested for the Existing Building "on condition that all work shall substantially conform to [the approved] drawings *as they apply to the objection above noted*" [emphasis added]. The "objection above noted" is the DOB objection that "[a] portion of the building is located within the initial setback district [sic]." The clear, plain meaning of the Board's conditional language is, therefore, that the requirement for substantial conformance – and, therefore, the scope of the Board's approval – is limited to development of the Existing Building with respect to the specifically granted variance for height and setback. All other aspects of the drawings are therefore specifically excluded from the requirement of substantial conformance.

In addition to the plain meaning of the 1982 Approval, the limited scope of the 1982 Approval is supported by the written record. While the site plan submitted with the 1982 Application includes other elements, including a parking lot and landscaped open space, the 1982 Application's statements of fact and findings do not so much as mention the open space. Nor is there any indication in the written record that the open space was an issue of concern or even of interest to the Board.

A letter dated July 1, 1982, from BSA Chairperson Sylvia Deutsch to Community Board 3 states that, "The Board had requested the applicant to provide us with additional submissions. The material requested was submitted on June 25, 1982." A letter to Richard Atwell, BSA Deputy Director, from the attorney for the applicant, dated June 21, 1982, and stamped as having been received by the Board on June 25, 1982 (the date referenced in the Chairperson's July 1 letter), lists the additional material requested by the Board, including (1) revised elevation and section drawings showing the sky exposure plane; (2) the zoning calculations at an enlarged scale; (3) the DOB permit application number; (4) documentation of the City's ownership of the Zoning Lot; and (5) the CEQR Project Data Statement. None of these items concerned or addressed the open space.

A letter to Mr. Atwell from the attorney for the applicant, dated October 27, 1982, lists materials being submitted in response to "Commissioner Deutsch's request at the hearing... held on September 21, 1982." Those materials were (1) a revised ground floor plan indicating provision of the required number of parking spaces and (2) a new DOB objection sheet indicating that the parking requirement was satisfied.

The parking lot was an issue because as originally submitted, the 1982 Application requested a variance to reduce the amount of required parking. As indicated by the materials submitted pursuant to the Chairperson's request, the Application was subsequently revised to provide the required parking and the requested variance was dropped.

In the 1982 Approval, the Board noted that "the site plan has been revised to provide the required number of parking spaces." Notably, however, the open space was not directly mentioned – or even indirectly referenced – by the Board in the 1982 Approval.

There is nothing in any part of the written record to indicate that the Board's grant of the requested height and setback variance for the Existing Building was in any way related to or conditioned upon the provision of on-site open space. This was probably because the Board recognized that the Existing Building is located directly across the street from the largest public park in the combined Lower East Side, East Village, SoHo and NoHo neighborhood – 7.8 acre Sara Delano Roosevelt Park, which runs between Chrystie Street and Forsythe Street for seven blocks from Houston Street all the way to Canal Street. In fact, the record clearly indicates that

the sole condition upon which the variance was granted was that there be substantial conformance with the approved drawings only with respect to the height and setback of the Existing Building.

However, the Owner proposes to redevelop the roof of the Existing Building as a residential open area, as part of an overall program of upgrades and improvements to the Existing Building. As shown on Drawing L-100 ("Roof Landscape Site Plan Details"), attached hereto as Exhibit D, the roof of the Existing Building is proposed to be landscaped with a combination of pavers and synthetic turf and will feature a number of amenities, including tables and chairs, benches, and three pergolas to provided shaded seating areas. Although the proposed rooftop open area cannot be counted toward meeting the open space requirement of Section 23-142,[11] it will provide approximately 9,150 square feet of open area for the residents of the Existing Building, thereby compensating in part for the grade level open space that will be occupied by the New Building.

Conclusion

For all the reasons stated above, it is respectfully requested that the Board grant this request for a minor amendment of the 1982 Approval to substitute the site plan submitted with this application for the site plan approved by the 1982 Approval.

Dated: April 27, 2012
New York, New York

By: _____
Robert S. Davis, Esq.

[11] Under the Section 12-10 definition of "open space" open space may be provided on the roof of a residential building only if it is not located above the portion of the building containing dwelling units. The proposed rooftop open area is above dwelling units.

Exhibit A

Bella Vista v. Bennett, 89 N.Y.2d 565 (1997)

In the Matter of Bella Vista Apartment Co. et al., Respondents, v. Roger H. Bennett et al., Constituting the Board of Standards and Appeals of the City of New York, et al., Appellants.

No. 12

COURT OF APPEALS OF NEW YORK

89 N.Y.2d 465; *678 N.E.2d 198*; *655 N.Y.S.2d 742*; *1997 N.Y. LEXIS 83*

January 7, 1997, Argued
February 6, 1997, Decided

PRIOR HISTORY: Appeal, by permission of the Court of Appeals, from an order of the Appellate Division of the Supreme Court in the Second Judicial Department, entered December 11, 1995, which affirmed a judgment of the Supreme Court (Herbert A. Posner, J.; opn *154 Misc 2d 579*), entered in Queens County in a proceeding pursuant to *CPLR article 78*, granting the petition to the extent of directing the New York City Department of Buildings to issue a building permit for a 14-story building provided that the permit application meets the standards of the Building Code of the City of New York, and otherwise denying the petition.

Matter of Bella Vista Apt. Co. v Bennett, 222 AD2d 502, reversed.

DISPOSITION: Order reversed, with costs, and petition dismissed.

HEADNOTES

Municipal Corporations - Zoning - Variance - Purchase of Development Rights Excess residential use development rights enjoyed by property that specially benefits from a commercial use variance may not be transferred to and tacked onto an adjoining property even for an as-of-right use by that lot owner, without discrete approval by the Board of Standards and Appeals of the City of New York (BSA). Pursuant to section 72-21 of the New York City Zoning Resolution, the BSA must make five findings before it may grant a variance, including that the unique conditions of the subject property preclude any "reasonable possibility" of a "reasonable return," and the variance is "therefore necessary to enable the owner to realize a reasonable return from such zoning lot", and that the variance be "the minimum variance necessary to afford relief". If a landowner is permitted to retain the commercial use variance, and then also to sell off its as-of-right development rights under the original residential use authorization, the predicate findings by the BSA would be undermined as would the general over-all Zoning Resolution Plan, inasmuch as the variance might not have been the "minimum variance necessary to afford relief," and the lack of any "reasonable possibility" of a "reasonable return" is retrospectively placed in

considerable doubt. Thus, the BSA must retain the power of review over these kinds of proposals to preserve coherent land use determinations and adherence to the zoning plan itself.

COUNSEL: *Paul A. Crotty, Corporation Counsel* of New York City *(Fay Ng* and *Pamela Seider Dolgow* of counsel), for appellants. The Court below erred in affirming the lower court's order directing the Department of Buildings to issue a building permit to petitioner Bella Vista without the Board of Standards and Appeals (BSA) first reviewing the lot merger proposal. Once a variance is granted for a zoning lot, the variance controls both the use and bulk of the lot while the lot is being used for the variance use. Thus, the owner of Lot 185 did not have any surplus bulk or development rights which could be transferred to the owner of the adjoining lot. Therefore, in this case, the proposed merger of part of Lot 185, which is subject to an existing variance, with another lot must be referred to the BSA for review. (*Matter of Cowan v Kern, 41 NY2d 591, 42 NY2d 910*; *Matter of Fiore v Zoning Bd. of Appeals, 21 NY2d 393, 1040*; *Conley v Town of Brookhaven Zoning Bd. of Appeals, 40 NY2d 309*; *Matter of Revorg Realty Co. v Walsh, 225 App Div 774, 251 NY 516*; *Matter of Long v Adirondack Park Agency, 76 NY2d 416*; *Matter of Crossroads Recreation v Broz, 4 NY2d 39*; *Matter of Village Bd. v Jarrold, 53 NY2d 254*; *Matter of Wolfson v Curcio, 150 AD2d 586*; *Matter of Ryan v Miller, 164 AD2d 968*; *Matter of Herman v Fossella, 53 NY2d 730.*)

No appearance for respondents.

JUDGES: Chief Judge Kaye and Judges Smith, Levine, Ciparick and Wesley concur; Judge Titone taking no part.

OPINION BY: BELLACOSA

OPINION

[*466] [**198] [***742] Bellacosa, J.

Petitioner, Bella Vista Apartment Co., a real estate developer, planned to build a 14-floor apartment house on its residentially zoned Lot 186 in Queens. The lot fell short, however, of the requisite floor area ratio (FAR) and bulk zoning [*467] specifications (*see,* NY City Zoning Resolution § 23-141). The owner of the adjoining Lot 185 had secured for itself a commercial use variance from New York City's Board of Standards and Appeals (BSA) to build a movie theater. Thereafter, in 1986, Bella Vista purchased 120,000 feet of development rights, including 30,000 feet of air rights, from the owner of Lot 185, in an effort to satisfy the shortfall. Bella Vista allegedly paid $ 1 million for these assertedly surplus development rights.

Without preliminary and discrete BSA review and approval, Bella Vista sought a building permit to erect the 14-story building, by piggy-backing Lot 185's FAR onto its own to eliminate the Lot 186 deficiency. The New York City Building Department rejected the application, premised on this creative combination, as did the BSA on review of that determination. Supreme Court and the Appellate Division disagreed and granted Bella Vista's *CPLR article 78* petition, annulling the determination and directing issuance of the building permit. We granted leave to [**199] [***743] appeal and now reverse, dismiss the petition and hold that the excess residential use development rights enjoyed by property that specially benefits from a commercial use variance may not be transferred to and tacked onto an adjoining property even for an as-of-right use by that lot owner, without discrete BSA approval. Appellants are the Board of Standards and Appeals of the City of New York, the Commissioner of Buildings of the City of New York and the Department of Buildings of the City of New York (collectively the City).

Central to this case is the fact that the owner of Lot 185, which was also zoned for residential use, had, in 1983, obtained a commercial use variance from the BSA to build a

movie theater. The novel land use twist of this case, therefore, is that Bella Vista sought to consolidate a portion of the surplus development FAR of Lot 185, "varianced" into a commercial use, with its own Lot 186 FAR, for the purpose of complying with the requisite bulk floor space specifications. It would, thus, construct a residential building albeit otherwise consistent with that lot's residential use.

Using this theory, Bella Vista filed an application in 1986 with the Department of Buildings, pursuant to New York City Zoning Resolution § 12-10, requesting approval of the zoning lot FAR merger and a permit for the construction of the proposed 14-story apartment house. The application was ultimately disapproved. In a letter dated November 7, 1990 [*468] and updated April 8, 1991, the Buildings Department rejected the proposed plan. On May 29, 1991, the BSA confirmed the Building Department's decision, stating:

"[I]n order to build the proposed fourteen (14) story building, a transfer of development rights from the variance site, lot 185 to lot 186 is needed which requires a zoning lot merger that results in an entirely new zoning lot; and ... the creation of this new zoning lot affects the basis of the Board's variance grant since its actions were based on a zoning lot which will now be significantly changed because of the zoning lot merger."

Next, Bella Vista turned to the courts for relief. It sued the City seeking to (1) annul the BSA's determination affirming the Building Department's declaration requiring the petitioners to obtain pre-BSA approval to use Lot 186 for residential purposes by conjoining the additionally acquired FAR development rights from Lot 185; and (2) compel the Department to issue a building permit for the proposed construction project.

In 1992, Supreme Court granted both prongs of Bella Vista's requested relief, provided that the permit application otherwise conformed to the Building Code's standards (*154 Misc 2d 579*). Supreme Court relied on *Matter of Clearview Gardens Pool Club v Foley (19 AD2d 905* [2d Dept 1963], *affd without opn 14 NY2d 809*) and stated that "[t]he existence of a variance on tax lot No. 185 does not require the transferor of unused development rights to obtain a new variance, as long as the acquirer is going to use those rights in conformance with the zoning resolution" (*154 Misc 2d, at 583*). The court added that the BSA irrationally juxtaposed "*use* and *bulk*" (*id., at 582*), reasoning that Bella Vista did not need a use variance, because the proposed apartment building was in conformance with the residential use requirements; all it needed was either a bulk variance or additional FAR and it had lawfully obtained the surplus FAR (*id.*). The court characterized the situation as "a hybrid of the usual zoning lot merger in which a developer merges two *entire* lots," because "only the air rights of lot No. 185 [were] being merged with all of lot No. 186" (*id., at 583*). The Appellate Division, in 1995, affirmed for the reasons stated by *Supreme Court (222 AD2d 502*) and later denied leave to appeal. We granted the City leave to appeal.

The City argues that the commercial use variance granted to Lot 185, by regulatory discretion based on landowner representations [*469] and BSA findings, precludes using a transferred portion of its development rights, without further review by the BSA. The City adds that shifting rights appurtenant to [**200] [***744] Lot 185 for residential purposes, when that lot had already been beneficially converted to an authorized commercial use by variance, would undermine the factors considered and the prerequisite findings made by the BSA in connection with the grant of the use variance.

Pursuant to section 72-21 of the New York City Zoning Resolution, the BSA must make the following five findings before it may grant a variance:

(a) That the lot has "unique physical conditions," which create "practical difficulties or unnecessary hardship" when forced to comply strictly with the Zoning Resolution;

(b) That the unique conditions of the subject property *preclude any "reasonable possibility" of a "reasonable return,"* and the variance is "therefore *necessary to enable the owner to realize a reasonable return from such zoning lot;*"

(c) That the variance "will not alter the essential character of the neighborhood" or "substantially impair the appropriate use of development of adjacent property," and that it "will not be detrimental to the public welfare;"

(d) That the owner did not create the difficulties or hardship leading to the necessity for the variance; and

(e) That the variance be "*the minimum variance necessary to afford relief*" (NY City Zoning Resolution § 72-21 [emphasis added]).

Further expanding upon section 72-21 (b), the City points to this Court's "well-established rule that a landowner who seeks a use variance must demonstrate factually, *by dollars and cents proof,* an inability to realize a reasonable return under existing permissible uses" (*Matter of Village Bd. v Jarrold, 53 NY2d 254, 256* [emphasis added]).

It is undisputed that these findings were necessarily made at the time of, and as part of, the use variance grant for Lot 185, in 1983. The City correctly argues that if the owner of Lot 185 is permitted to retain the commercial use variance, and then [*470] also to sell off its as-of-right development rights under the original residential use authorization, the predicate findings by the BSA would be undermined as would the general over-all Zoning Resolution Plan. This is particularly so absent an updated review and ruling by the BSA to insure compliance with section 72-21, as Bella Vista and the adjoining owner would have it unprecedentedly applied to their arrangement. In other words, if a landowner retains the bonus option to sell surplus development rights as they existed before the use variance is acquired, the variance might not have been the "minimum variance necessary to afford relief," and the lack of any "reasonable possibility" of a "reasonable return" is retrospectively placed in considerable doubt. This seems especially so in this case since the "residual development air rights" garnered a $ 1 million sale price in the marketplace.

The City urges that the beneficiary of a variance, as well as the courts on judicial review of such matters, are bound by the explicit variance record and findings of the BSA. The City's argument would, therefore, require a landowner benefitted by a variance to seek additional authorizing relief from the BSA before effectively transferring prevariance rights and benefits to adjoining owners. Otherwise, the premium, on top of its acquired variance, from its sale of development rights, contradicts the no-reasonable-return predicate finding, necessary to have garnered the use variance in the first place.

Matter of Clearview Gardens Pool Club v Foley (19 AD2d 905, affd without opn 14 NY2d 809, supra) is plainly and significantly distinguishable. There, the Appellate Division concluded that "the prior variance grants could not and did not take from the owner of the property his statutory right to use the property for any purpose permitted by the applicable zoning resolution" (*19 AD2d, at 906*). Rather, the Court stated, "[t]he owner retained the right to revert at any time to a conforming use" (*id., at 906*).

Although in *Clearview* the court determined that a use variance did not prohibit an owner from reverting entirely to a conforming use, the reversion there was simply that, not some compound hybrid. That situation is far from the artful combination attempted [**201] [***745] in the instant case. Bella Vista's acquisition

and piggy-backing of Lot 185's FAR to satisfy its Lot 186 bulk building deficiency might undermine the basis for the use variance grant and offend proper land use regulation and application. The fatal defect of this merger theory is that once the use variance was granted, the owner of Lot 185 could [*471] only use the property in the manner authorized by the variance or revert completely back to its as-of-right use under *Clearview.* The precedent should not be expanded to allow landowners to garner commercial use by variance and then, by resourceful fusions, leverage assertedly residual residential development rights, without discrete BSA approval. The inherent contradictions and dangers to effective land use planning regulation and application dictate otherwise.

The lower courts thus erred in concluding that additional BSA consideration and approval were not necessary in this kind of circumstance. The determinations of the BSA and the Buildings Department were rational and within their justifiable range of discretion (*see, Conley v Town of Brookhaven Zoning Bd. of Appeals, 40 NY2d 309, 314*; *see also, Matter of Cowan v Kern, 41 NY2d 591, 598)*. Allowing the combination of a use variance with a spinoff of as-of-right surplus development rights between adjoining properties, so that a FAR deficient lot could then qualify even for a permitted use, might enable variance holders to manipulate and augment the generous benefit of their variances. The BSA must retain the power of review over these kinds of proposals to preserve coherent land use determinations and adherence to the zoning plan itself.

Accordingly, the order of the Appellate Division should be reversed, with costs, and the petition dismissed.

Chief Judge Kaye and Judges Smith, Levine, Ciparick and Wesley concur; Judge Titone taking no part.

Order reversed, etc.

Exhibit B

120 West 25th Street, BSA No. 885-78-BZ

885-78-BZ
APPLICANT – Kramer Levin Naftalis & Frankel LLP, for 120 West 25th Realty Company, LLC, owner.
SUBJECT – Application November 25, 2008 – Amendment to a previously granted Variance (§72-21) to allow the transfer of development rights from the subject site (Lot 53) to an adjoining site (Lot 49) in an M1-6 zoning district.
PREMISES AFFECTED – 120 West 25th Street, south side of West 25th Street, between Sixth and Seventh Avenues, Block 800, Lot 53, Borough of Manhattan.
COMMUNITY BOARD #3M
APPEARANCES –
For Applicant: Paul Selver.
ACTION OF THE BOARD – Application granted on condition.
THE VOTE TO GRANT –
Affirmative: Chair Srinivasan, Vice-Chair Collins, Commissioner Ottley-Brown, Commissioner Hinkson and Commissioner Montanez.....5
Negative:.....0
THE RESOLUTION:

WHEREAS, this is an application for a reopening and an amendment to an existing variance, to permit the transfer of development rights from the subject site to an adjoining property in an M1-6 zoning district; and

WHEREAS, a public hearing was held on this application on February 24, 2009, after due notice by publication in *The City Record*, and then to decision on March 17, 2009; and

WHEREAS, the premises and surrounding area had site and neighborhood examinations by Chair Srinivasan, Vice Chair Collins, Commissioner Hinkson, Commissioner Montanez, and Commissioner Ottley-Brown; and

WHEREAS, Community Board 4, Manhattan, withheld support, while not recommending denial of this application; and

WHEREAS, the subject site (Lot 53) is located on the south side of West 25th Street, between Sixth Avenue and Seventh Avenue within an M1-6 zoning district; and

WHEREAS, the site has a lot area of approximately 4,077 sq. ft. and is occupied by a five-story and cellar building; and

WHEREAS, the ground floor of the building is occupied by retail use and the second through fifth floors are occupied by eight Class "A" apartments; and

WHEREAS, the building has a floor area of 16,906 sq. ft., and an FAR of 2.41; and

WHEREAS, the applicant states that the site has a maximum total FAR of 10.0 and a maximum floor area of 40,770 sq. ft., of which approximately 23,864 sq. ft. of allowable floor area is undeveloped; and

WHEREAS, on April 3, 1979, under the subject calendar number, the Board granted a variance to permit, in an M1-6 zoning district, the conversion of the second through fifth floors of the subject building to residential use; and

WHEREAS, on October 21, 2008, by a conditional Letter of No Objection ("LNO"), the Board approved the merger of the site into a larger zoning lot comprised of other properties, including Block 800, Lot 49; and

WHEREAS, the LNO did not authorize the transfer or utilization of the available development rights of the subject site; and

WHEREAS, the applicant now proposes to transfer 23,864 sq. ft. of unused development rights from Lot 53 to adjacent Lot 49 to its east; and

WHEREAS, the applicant also proposes to modify its site plan to reflect the merger of Lots 55 and 56 within the subject Zoning Lot; and

WHEREAS, the applicant represents that the transfer of development rights from Lot 53 requires no modification of the Board's grant because the waivers and conditions of the underlying grant are not implicated and the mixed-use residential/commercial building authorized by the variance will be unchanged; and

WHEREAS, the applicant further represents that the proposed transfer of development rights is consistent with the Court's decision in Bella Vista v. Bennett, 89 N.Y. 2d 565 (1997), setting forth the parameters of Board review of requests for the transfer of development rights from sites for which a variance has been granted; and

WHEREAS, Bella Vista concerned a permit request for a new as-of-right residential building proposed to be built through the transfer of development rights-- from a site in which the Board granted a use variance to permit operation of a movie theater in a residential zoning district, to a separate adjacent site under common ownership-- for development of a complying residential building; and

WHEREAS, the Court held that review and approval of such transfers by the Board was required, inter alia, because the basis for the original grant, particularly with respect to the findings of financial hardship under ZR § 72-21(b) and minimum variance needed to provide relief under ZR § 72-21(e), may be implicated by the proposed transfer; and

WHEREAS, the applicant states that an approval of the requested development rights transfer from the subject site does not undermine the integrity of the Board's 1979 findings concerning ZR §§ 72-21(b) or 72-21(e) because the facts of the instant application are readily distinguishable from those underlying the Court's holding in Bella Vista; and

WHEREAS, the applicant represents that, unlike in Bella Vista, the subject site and the proposed development site have been under separate, unrelated ownership since at least the time of the Board's 1979 grant and the owner of the variance site therefore lacked control over either the timing of new development on the adjacent property or the use of the development rights for such a development; and

WHEREAS, the applicant states that the brief period of time elapsing between the date of the Bella Vista variance grant and the date of the permit application in question also distinguishes that case from the proposed development rights transfer under review in the subject application; and

WHEREAS, in Bella Vista, the permit application proposing to use floor area transferred from the variance site was filed only three years after the Board grant, while the variance for the subject site was granted in 1979, thirty years before the filing of the instant

application; and

WHEREAS, the applicant represents that the owner of the subject site could not have anticipated that its appurtenant unused development rights had any value at the time of the Board's grant because there was no demand for and therefore no value to the development rights appurtenant to any of the properties in the area; and

WHEREAS, in support, the applicant points to affidavits executed in 1979 by the owner and the former owner of the subject site included in the variance application attesting to the building's lack of economic value, as well a letter from a real estate broker dated March 2, 1979 discussing the lack of value of the subject building "in its current state" which listed 26 buildings with full floors for rent and discussed the lack of real estate demand in the area surrounding the subject site; and

WHEREAS, at the time of the 1991 Board grant in Bella Vista, the community surrounding the site in question was economically vibrant and the value of development rights was consequently far more likely to be contemplated by the Board; and

WHEREAS, as there would have been no basis to analyze the value of the development rights at the time of the grant in the instant case, the applicant posits that the grant of a simple use variance was construed to be sufficient to generate a reasonable return and provide the minimum variance necessary for relief, and that the subject site therefore retained full use of the excess development rights; and

WHEREAS, the Board agrees that the differences in timing and in the health of the respective real estate markets distinguish the Bella Vista case from the instant case and supports the conclusion that the use of the subject site's excess development rights was not foreseeable by the owner or the Board; and

WHEREAS, the applicant represents that the variance was granted to "equalize" the economic status of the subject site with that of other properties within the zoning district that were not similarly burdened with a unique physical condition and which retained their full development rights; and

WHEREAS, the applicant states that, as the variance grant put the owner on substantially the same economic footing as other properties within the same zoning district, the (b) finding of the subject variance would not be affected by the transfer because the variance equalized the marketability of space at the subject site with that of space in neighboring buildings that were able to accommodate conforming uses, and which would be permitted to transfer development rights as-of-right; and

WHEREAS, the applicant concludes that allowing the zoning lot merger and transfer of unused development rights appurtenant to the subject site now is therefore no different from the transfer of unused development rights from other properties on the block and that equalizing the economic status of the two classes of properties would not have required that the subject site be stripped of its excess development rights; and

WHEREAS, the Board finds that the proposed transfer of development rights does not implicate or affect the basis for its findings in general, and specifically the (b) and (e) finding, at the time that they were made; and

WHEREAS, Community Board 4, Manhattan expressed concerns that the potential height and configuration of a building proposed on Lot 49 may be incompatible with the surrounding area; and

WHEREAS, in response, the applicant submitted photographs indicating that the context in the immediate area surrounding the subject site includes 19 to 40 story buildings and that at least seven buildings of that size are located on Sixth Avenue within two blocks north and south of the subject site; and

WHEREAS, the Board notes, however, that the scope of its review is limited to consideration of the proposed transfer of development rights from Lot 53 to Lot 49 and the implications of such a transfer on the findings it made when the variance was approved, particularly under ZR §§ 72-21(b) or 72-21(e); and

WHEREAS, further, the Board's grant recognizes that the use of such development rights would be subject to the bulk regulations of the underlying district; and

WHEREAS, based upon its review of the record, the Board finds that the proposed transfer of development rights is appropriate.

Therefore it is Resolved that the Board of Standards and Appeals reopens and amends the resolution, said resolution having been adopted on April 3, 1979, so that as amended this portion of the resolution shall read: "to permit the transfer of 23,864 sq. ft. of development rights from Block 800, Tax Lot 53 to Block 800, Tax Lot 49, and to permit modifications to the BSA-approved site plan *on condition* that all site conditions shall comply with the drawing marked "Received March 17, 2009"– (1) sheet;" and *on further condition*:

THAT all conditions from the prior resolution not specifically waived by the Board shall remain in effect;

THAT the Department of Buildings must ensure compliance with all other applicable provisions of the Zoning Resolution, the Administrative Code, and any other relevant laws under its jurisdiction irrespective of plan(s) and/or configuration(s) not related to the relief granted."

(DOB Application No. 1103865555)

Adopted by the Board of Standards and Appeals, March 17, 2009.

A true copy of resolution adopted by the Board of Standards and Appeals, March 17, 2009.
Printed in Bulletin Nos. 11-12, Vol. 94.

Copies Sent
To Applicant
Fire Com'r.
Borough Com'r.

Exhibit C

Saint Francis Xavier/Clothing Workers Center, BSA No. 1149-62-BZ

1149-62-BZ
APPLICANT – Bryan Cave LLP, for College of Saint Francise Xavier/Clothing Workers Center, Incorporated.
SUBJECT – Application May 8, 2008 – Amendment to a previously approved UG3 parochial school (Xavier High School) for the increase of the zoning lot in a C6-2 zoning district.
PREMISES AFFECTED – 24-40 West 16th Street and 31-35 West 15th Street, irregularly shaped lot with frontage on W. 15th and 16th, between 5th and Avenue of the Americas. Block 817, Lot 72, 21. Borough of Manhattan.
COMMUNITY BOARD #5M
APPEARANCES –
For Applicant: Robert Davis.
ACTION OF THE BOARD – Application granted on condition.
THE VOTE TO GRANT –
Affirmative: Chair Srinivasan, Vice Chair Collins, Commissioner Ottley-Brown, Commissioner Hinkson, and Commissioner Montanez.....5
Negative:.....0
THE RESOLUTION:

WHEREAS, this is an application for a reopening and an amendment to an existing variance, to allow an increase in the size of a zoning lot in a C6-2M zoning district and an amendment to the site plan; and

WHEREAS, a public hearing was held on this application on June 17, 2008, after due notice by publication in *The City Record*, and then to decision on June 24, 2008; and

WHEREAS, the premises and surrounding area had site and neighborhood examinations by Chair Srinivasan and Commissioner Ottley-Brown; and

WHEREAS, Community Board 5, Manhattan, recommends approval of this application; and

WHEREAS, the application is brought on behalf of St. Francis Xavier High School (the "School"), a nonprofit religious educational institution; and

WHEREAS, the subject zoning lot (Lot 72) is a through-block site located between West 16th Street and West 15th Street, east of Sixth Avenue, and has a lot area of approximately 44,216 sq. ft.; and

WHEREAS, the site is located within a C6-2M zoning district; and

WHEREAS, the subject lot is occupied by a six-story and cellar, School building, with a height of 84'-6", floor area of 165,584 sq. ft., and an FAR of 3.74; and

WHEREAS, the applicant states that the site has a maximum total FAR of 6.50 and a maximum floor area of 287,405 sq. ft., of which approximately 121,821 sq. ft. of floor area is undeveloped; and

WHEREAS, on February 19, 1963, under the subject calendar number, the Board granted a variance and a special permit that allowed the construction of a six-story and cellar school and monastery in a C6-2 zoning district; and

WHEREAS, the waivers associated with the grant relate to side and rear yard requirements and the special permit relates to height and setback requirements; and

WHEREAS, under the subject calendar number, the Board subsequently reopened and amended the resolution to extend the time to complete construction and obtain a certificate of occupancy; and

WHEREAS, the applicant represents that the site's conditions remain unchanged from those approved by the Board; and

WHEREAS, the applicant further represents that the bulk regulations of the C6-2M zoning district are identical to those of the C6-2 zoning district in effect at the time of the Board's grant; and

WHEREAS, the applicant now proposes to merge its zoning lot with adjacent Lot 21 to its east, resulting in a zoning lot with a lot area of approximately 51,959 sq. ft., for the purpose of transferring a portion of its excess development rights to Lot 21 for the construction of a hotel; and

WHEREAS, the School also proposes to demolish an existing brownstone building located on the eastern edge of the School's property on West 16th Street and to use the remainder of its excess development rights to build a new rectory for use in connection with the neighboring church to its west; and

WHEREAS, the applicant seeks to modify its site plan to reflect the zoning lot merger and the redevelopment of the brownstone; and

WHEREAS, the applicant represents that neither the proposed development of Lot 21, nor the redevelopment of the brownstone, require a modification of the Board's grant because the waivers and conditions of the underlying grant are not implicated; the School building and the side and rear yards authorized by the variance will be unchanged, and the configuration of the other buildings on the zoning lot will remain the same; and

WHEREAS, the applicant further represents that no new non-compliance will be created on the zoning lot as a result of the lot merger; and

WHEREAS, the Board notes that the respective fee owners of Lot 72 and Lot 21 authorized the instant application; and

WHEREAS, based upon its review of the record, the Board finds that the proposed increase in the size of the zoning lot and modification of the site plan is appropriate.

Therefore it is Resolved that the Board of Standards and Appeals reopens and amends the resolution, said resolution having been adopted on February 13, 1962, so that as amended this portion of the resolution shall read: "to permit the increase in size of the zoning lot to include tax lot 21 and to permit modifications to the BSA-

1149-62-BZ

approved site plan *on condition* that all site conditions shall comply with drawings marked 'Received May 8, 2008"–(1) sheet; and *on further condition*:

THAT all conditions from the prior resolution not specifically waived by the Board shall remain in effect;

THAT the Department of Buildings must ensure compliance with all other applicable provisions of the Zoning Resolution, the Administrative Code, and any other relevant laws under its jurisdiction irrespective of plan(s) and/or configuration(s) not related to the relief granted.

(DOB Application Nos. 110159970, 110159961)

Adopted by the Board of Standards and Appeals, June 24, 2008.

A true copy of resolution adopted by the Board of Standards and Appeals, June 24, 2008.
Printed in Bulletin No. 26, Vol. 93.

Copies Sent
To Applicant
Fire Com'r.
Borough Com'r.

Exhibit D

Existing Building Rooftop Landscaping Plan

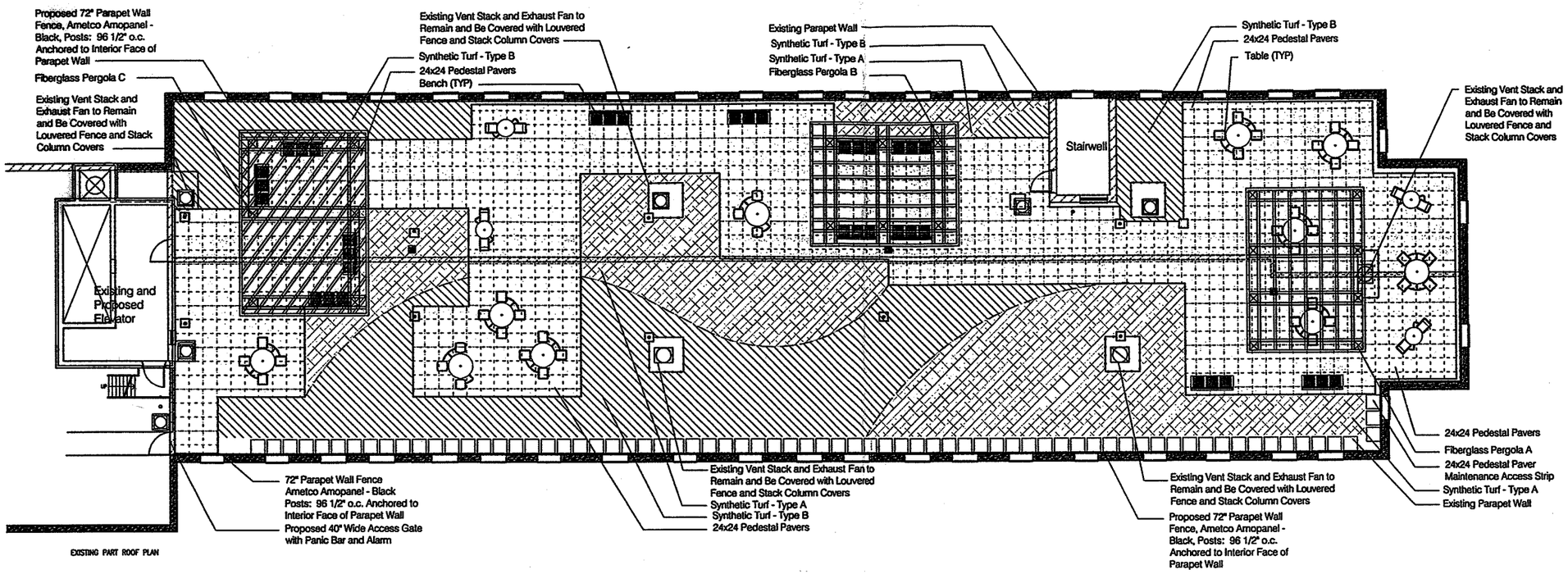

EXISTING PART ROOF PLAN

Rooftop Landscape Site Plan

Scale: 1/8" = 1'-0"

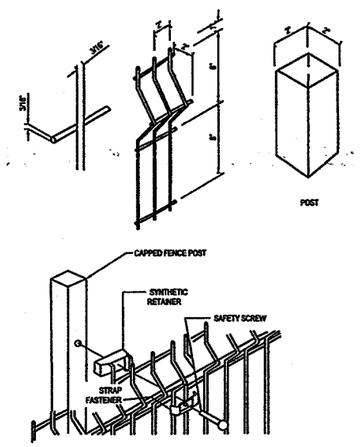

AMETCO MANUFACTURING CORPORATION
4325 HAMANN PARKWAY P.O. BOX 1219
WILLOUGHBY, OHIO 44096
800-321-7042 TOLL FREE
PHONE: (440) 951-4300
FAX: (440) 951-2542
www.ametco.com

AMOPANEL PANELS

2" x 6" MESH, BASIC SECURITY

NOTE:
1. INSTALLATION TO BE COMPLETED IN ACCORDANCE WITH MANUFACTURER'S SPECIFICATIONS.
2. DO NOT SCALE DRAWINGS.

Parapet Wall Fence Detail

Not to Scale

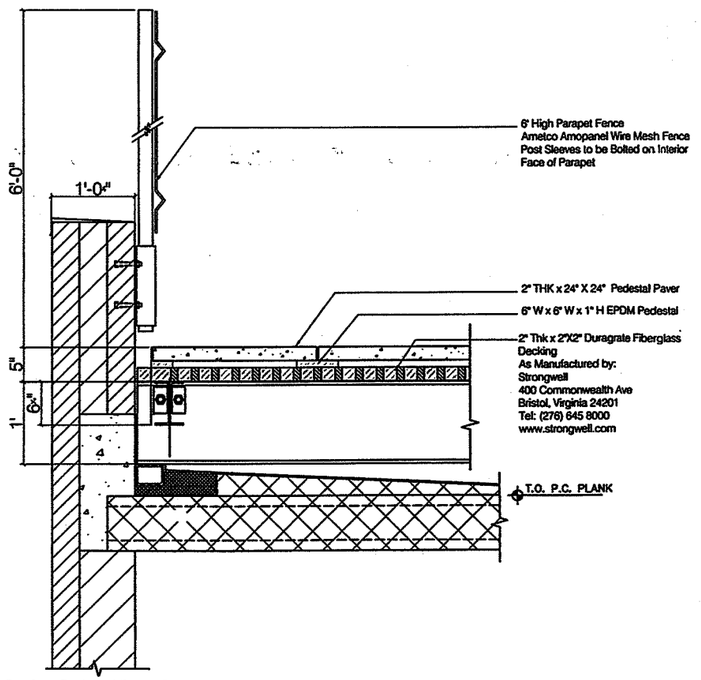

Rooftop Pedestal Paver Detail

Not to Scale

Paver Schedule - Roof Terrace						
PAVEMENT	QTY. (SF)	TYPE	SIZE	THICKNESS	COLOR	FINISH
Type A	4680	Prest Paver	24" x 24"	2"	Matrix 1171	Tudor

MANUFACTURER:
Hanover Architectural Products
240 Bender Road
Hanover, PA 17331
t: 717-637-0500
f: 717-637-7145
www.hanoverpavers.com

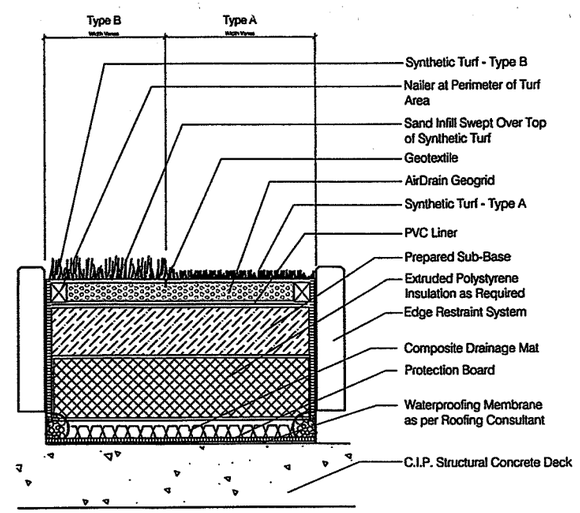

Manufacturer:

DuPont Forever Lawn
c/o Designed For Fun, Inc
866-464-7529
www.designedforfun.com

Turf Type A: Tall
ForeverLawn Select EL

Turf Type B: Short
ForeverLawn Endura Reflex

Synthetic Turf Detail

Not to Scale

Landscape Architecture:

MOSS GILDAY GROUP

Landscape Architecture
Site Planning
Urban Design
www.mossgilday.com

64 Grant Place
Lois Silver, NJ 07739
Tel 732 531 8575
Fax 732 531 8574

Structural Engineering:
Douglas G. Peterson & Associates, Inc.
22 Cortlandt Street
New York, New York 10007
T. 212-419-0373 F. 212-419-0410

Architecture:
Fogarty Finger Architects, LLC
289 Hudson Street
New York, New York 10013
T. 212-668-7450 F. 212-668-7444

Project Title
Building Improvements for
Stanton Street Rooftop

Located at
10 Stanton Street
New York
New York

General Dwg Legend

PROGRESS PRINT
06 DEC 11
PRELIMINARY
For Review and
Comment Only

Rev	Description	Date	Ckd

Dwg Title
Roof Landscape Site Plan
Details

Moss Gilday Group, LLC

Project No.	592
Date	29 NOV 11
Dwg Scale	
Dwg No.	L-100
Sheet No.	1 of 2

592-Stanton Street, NY