190 GRAND STREET HOUSE
REAR ROOF ALTERATION

Address: 190 GRAND STREET
Borough: MANHATTAN
Block: 471 Lot: 58
LP Number: LP-02411
Designated: November 16, 2010
Status: DESIGNATED

1 190 GRAND STREET AREA MAP
SCALE: NTS

2 190 GRAND STREET REAR ROOF PHOTO
SCALE: NTS

LAB ARCHITECTURE, PLLC
270 WEST 25TH ST, UNIT A
NEW YORK, NY 10001
T: 646.470.4611

OWNER
Jerome G. Stabile, III Realty LLC
C/O Building Equity Management LLC
611 Broadway, RM 817
New York, NY 10012
Phone: 212-203-5613

PROJECT
APARTMENT RENOVATION
190 GRAND STREET, APT 2
NEW YORK, NY 10013

PROPERTY INFO
BLOCK: 471 LOT: 78

SHEET TITLE
COVER

DATE: 10.05.2015

SHEET
A-01

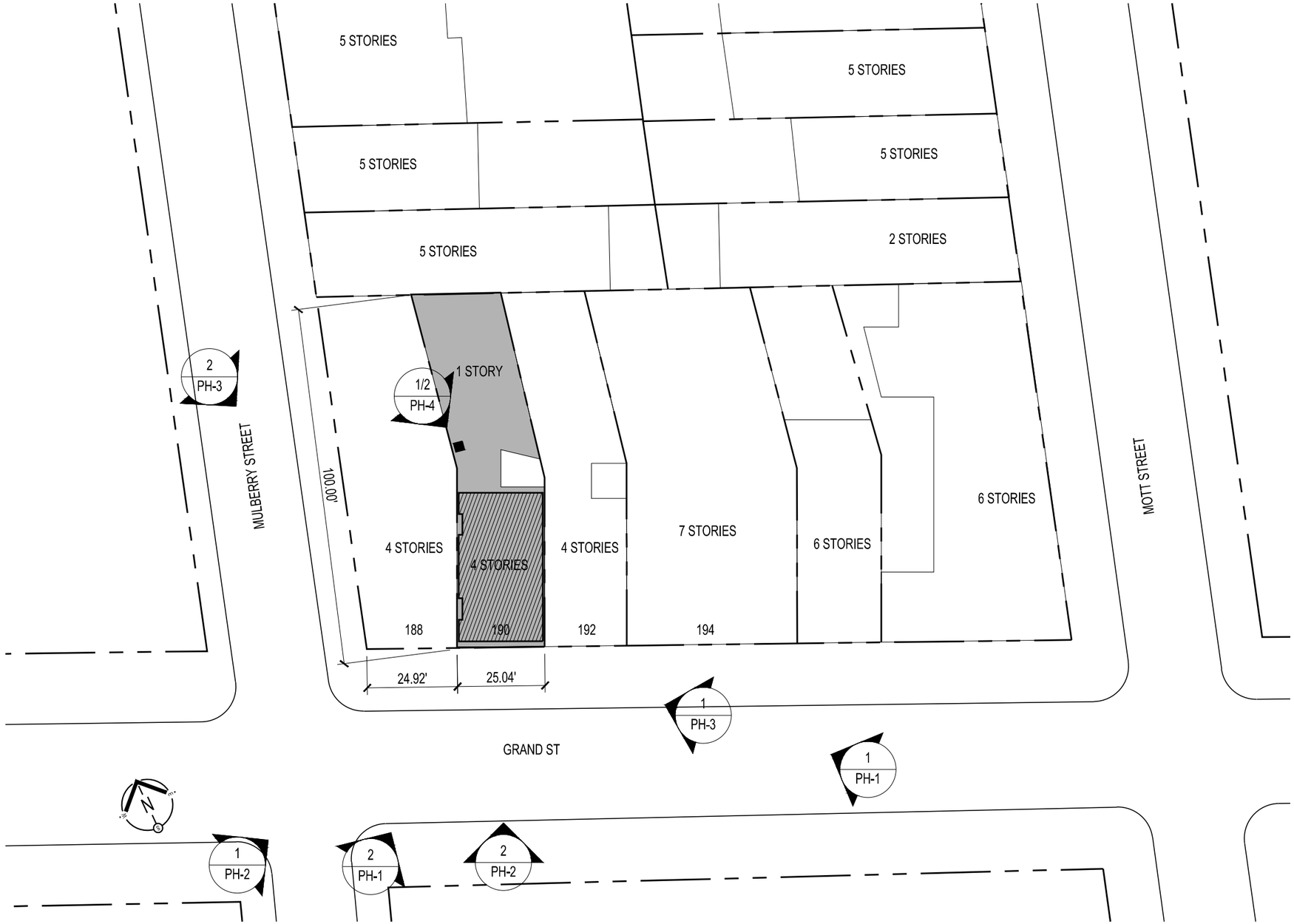

1 190 GRAND STREET PLOT PLAN

SCALE: NTS

COLOR SCHEDULE	
ROOF SHINGLES	CERTAINTEED PATRIOT - COLONIAL SLATE
DORMER WOOD TRIM	BENJAMIN MOORE ESSEX GREEN PM-11
DORMER SIDE SHINGLES	BENJAMIN MOORE STORMY SKY 1616
BRICK	MATCH EXST'G BRICK AS CLOSE AS POSSIBLE
MORTAR	TINTED TO MATCH EXST'G BRICK, TEXTURE TO MATCH EXST'G MORTAR
REAR DORMER WINDOW	ALUMINUM WINDOW FRAME IN BRONZE COLOR

WINDOW SCHEDULE	
REAR DORMER WINDOWS	(4) 39"W x 51"H CRYSTAL 2000A DOUBLE HUNG ALUMINUM WINDOW IN BRONZE

LAB ARCHITECTURE, PLLC
270 WEST 25TH ST, UNIT A
NEW YORK, NY 10001
T: 646.470.4611

OWNER
Jerome G. Stabile, III Realty LLC
C/O Building Equity Management LLC
611 Broadway, RM 817
New York, NY 10012
Phone: 212-203-5613

PROJECT
APARTMENT RENOVATION
190 GRAND STREET, APT 2
NEW YORK, NY 10013

PROPERTY INFO
BLOCK: 471 LOT: 78

SHEET TITLE
PLOT PLAN AND SCHEDULES

DATE: 10.05.2015

SHEET
A-02

1 HISTORIC FRONT FACADE PHOTO

2 HISTORIC FRONT FACADE PHOTO

LAB ARCHITECTURE, PLLC
270 WEST 25TH ST, UNIT A
NEW YORK, NY 10001
T: 646.470.4611

OWNER
Jerome G. Stabile, III Realty LLC
C/O Building Equity Management LLC
611 Broadway, RM 817
New York, NY 10012
Phone: 212-203-5613

PROJECT
APARTMENT RENOVATION
190 GRAND STREET, APT 2
NEW YORK, NY 10013

PROPERTY INFO
BLOCK: 471 LOT: 78

SHEET TITLE
HISTORIC FRONT FACADE PHOTOS

DATE: 10.05.2015

SHEET
PH-1

1 EXISTING FRONT FACADE PHOTO

2 EXISTING FRONT FACADE PHOTO

LAB ARCHITECTURE, PLLC
270 WEST 25TH ST, UNIT A
NEW YORK, NY 10001
T: 646.470.4611

OWNER
Jerome G. Stabile, III Realty LLC
C/O Building Equity Management LLC
611 Broadway, RM 817
New York, NY 10012
Phone: 212-203-5613

PROJECT
APARTMENT RENOVATION
190 GRAND STREET, APT 2
NEW YORK, NY 10013

PROPERTY INFO
BLOCK: 471 LOT: 78

SHEET TITLE
EXISTING FRONT FACADE PHOTOS

DATE: 10.05.2015

SHEET
PH-2

1 PHOTO FROM EAST

2 PHOTO FROM NORTH WEST

LAB ARCHITECTURE, PLLC
270 WEST 25TH ST, UNIT A
NEW YORK, NY 10001
T: 646.470.4611

OWNER
Jerome G. Stabile, III Realty LLC
C/O Building Equity Management LLC
611 Broadway, RM 817
New York, NY 10012
Phone: 212-203-5613

PROJECT
APARTMENT RENOVATION
190 GRAND STREET, APT 2
NEW YORK, NY 10013

PROPERTY INFO
BLOCK: 471 LOT: 78

SHEET TITLE
EXISTING FRONT FACADE PHOTOS

DATE: 10.05.2015

SHEET
PH-3

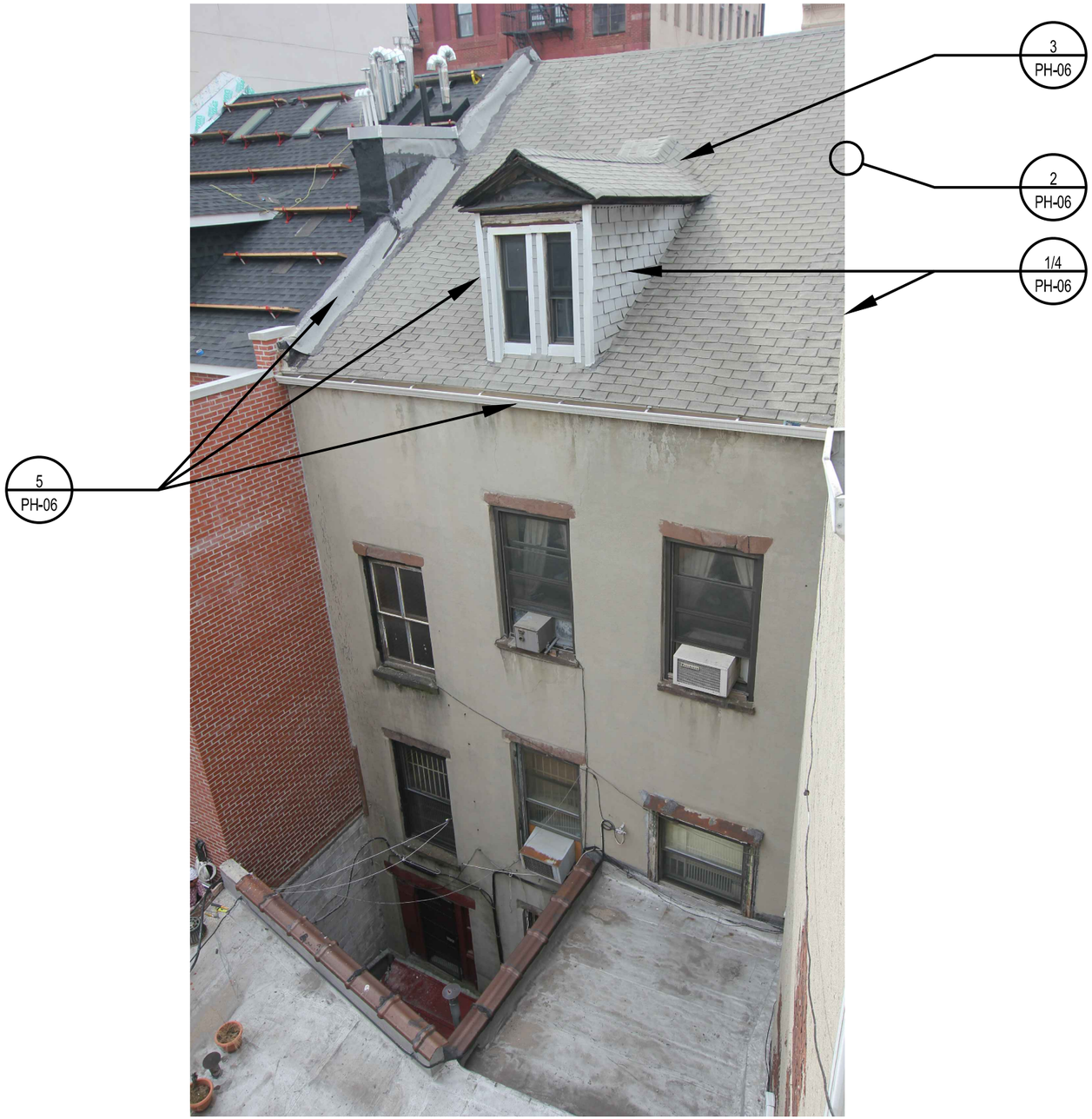

1 EXISTING REAR FACADE PHOTO

2 EXISTING REAR FACADE PHOTO

LAB ARCHITECTURE, PLLC
270 WEST 25TH ST, UNIT A
NEW YORK, NY 10001
T: 646.470.4611

OWNER
Jerome G. Stabile, III Realty LLC
C/O Building Equity Management LLC
611 Broadway, RM 817
New York, NY 10012
Phone: 212-203-5613

PROJECT
APARTMENT RENOVATION
190 GRAND STREET, APT 2
NEW YORK, NY 10013

PROPERTY INFO
BLOCK: 471 LOT: 78

SHEET TITLE
EXISTING REAR FACADE PHOTOS

DATE: 10.05.2015

SHEET
PH-4

1 COPING/ROOFING PENETRATIONS

2 CHIMNEY/PARAPET

3 DORMER

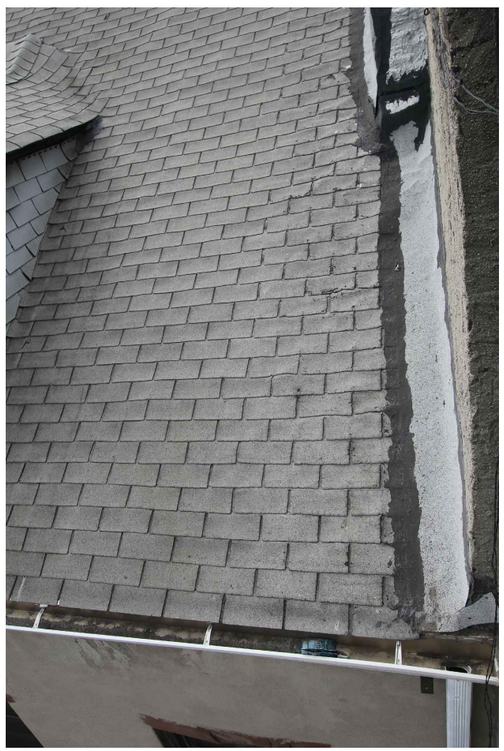

4 GUTTER/COPING

5 OVERALL REAR ROOF

LAB ARCHITECTURE, PLLC
270 WEST 25TH ST, UNIT A
NEW YORK, NY 10001
T: 646.470.4611

OWNER
Jerome G. Stabile, III Realty LLC
C/O Building Equity Management LLC
611 Broadway, RM 817
New York, NY 10012
Phone: 212-203-5613

PROJECT
APARTMENT RENOVATION
190 GRAND STREET, APT 2
NEW YORK, NY 10013

PROPERTY INFO
BLOCK: 471 LOT: 78

SHEET TITLE
REAR FACADE DETAIL PHOTOS

DATE: 10.05.2015

SHEET
PH-5

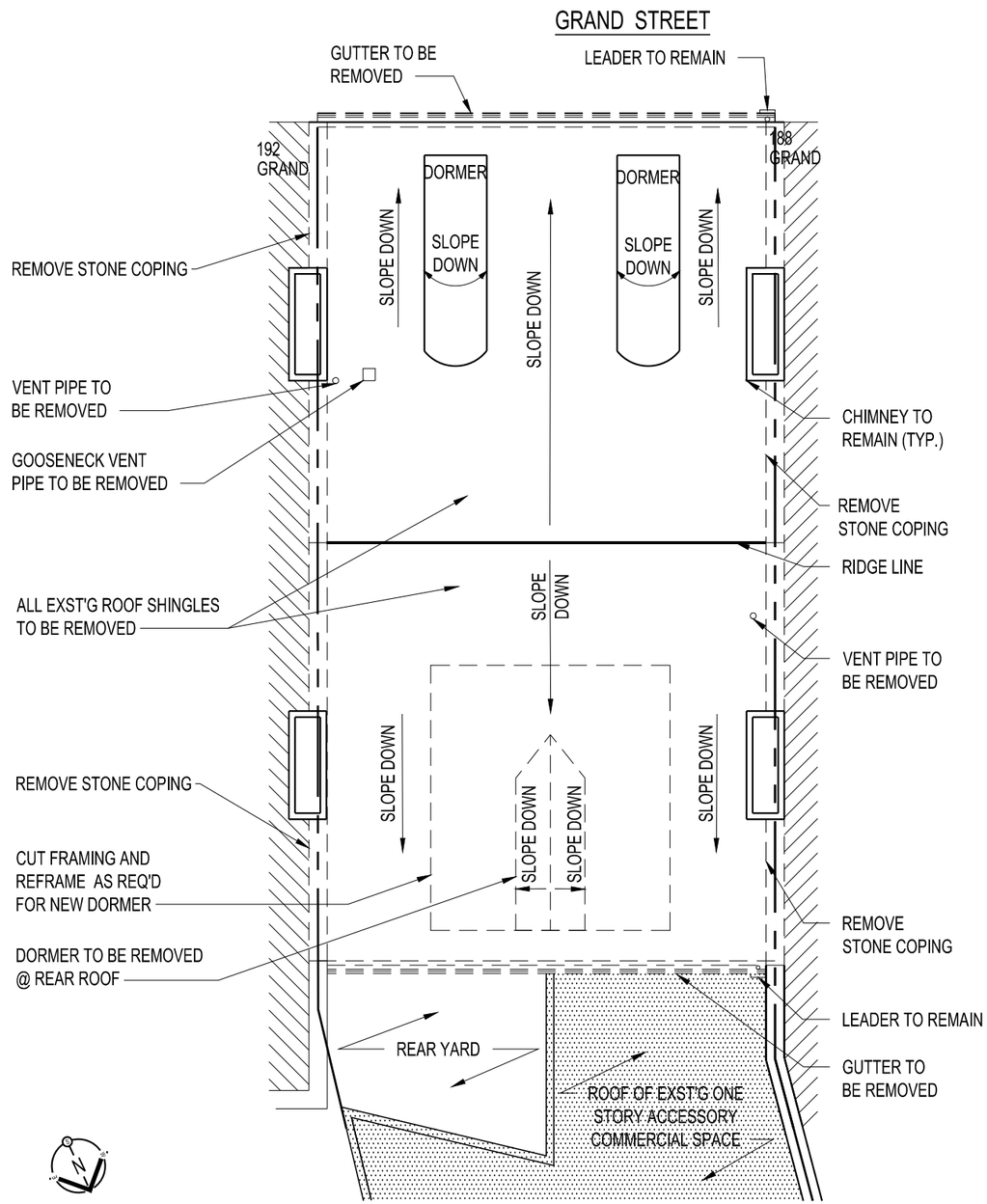

1 EXISTING ROOF PLAN

SCALE: 1/8" = 1'-0"

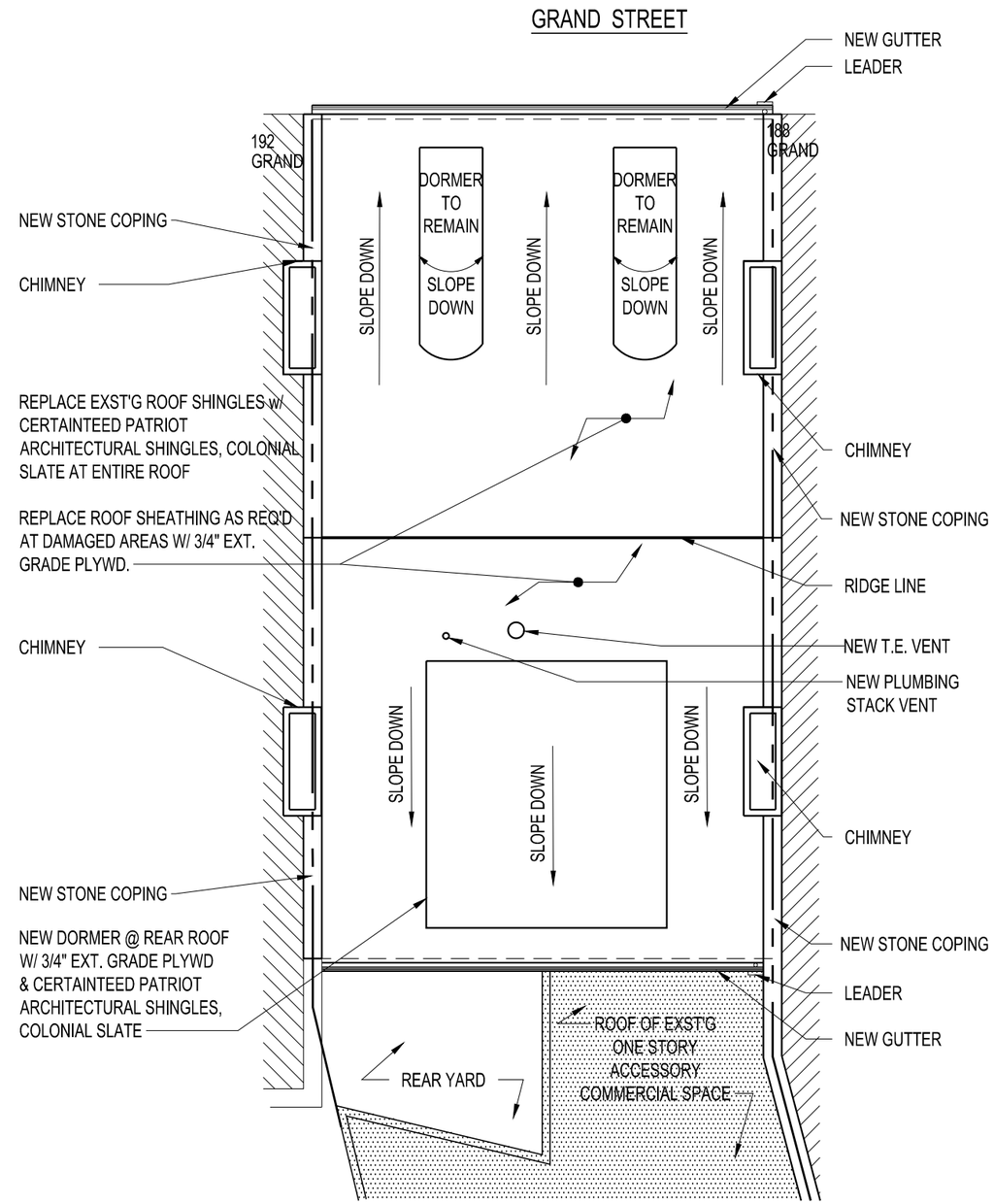

2 PROPOSED ROOF PLAN

SCALE: 1/8" = 1'-0"

LAB ARCHITECTURE, PLLC
270 WEST 25TH ST, UNIT A
NEW YORK, NY 10001
T: 646.470.4611

OWNER
Jerome G. Stabile, III Realty LLC
C/O Building Equity Management LLC
611 Broadway, RM 817
New York, NY 10012
Phone: 212-203-5613

PROJECT
APARTMENT RENOVATION
190 GRAND STREET, APT 2
NEW YORK, NY 10013

PROPERTY INFO
BLOCK: 471 LOT: 78

SHEET TITLE
EXISTING AND PROPOSED ROOF PLANS

DATE: 10.05.2015

SHEET
A-03

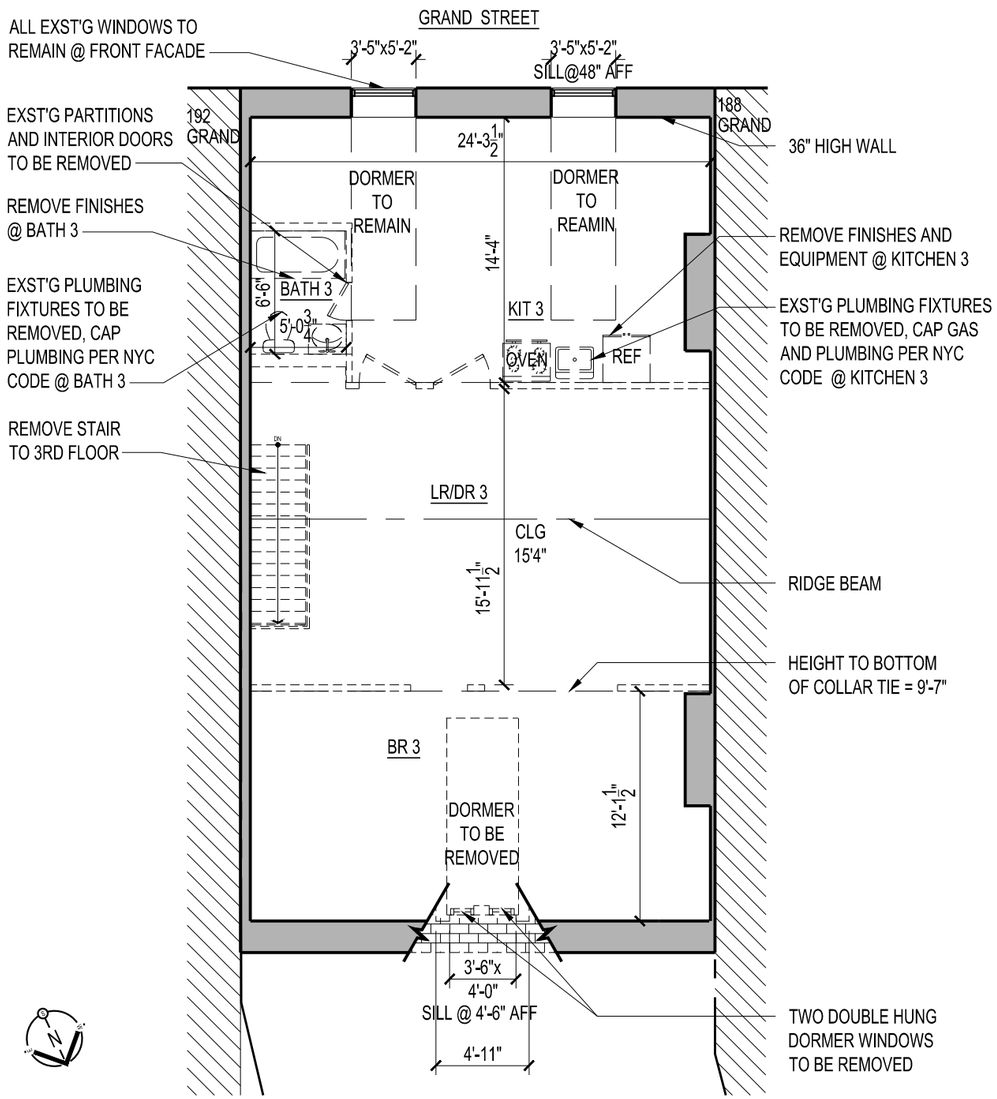

1 EXISTING 4TH FLOOR PLAN

SCALE: 1/8" = 1'-0"

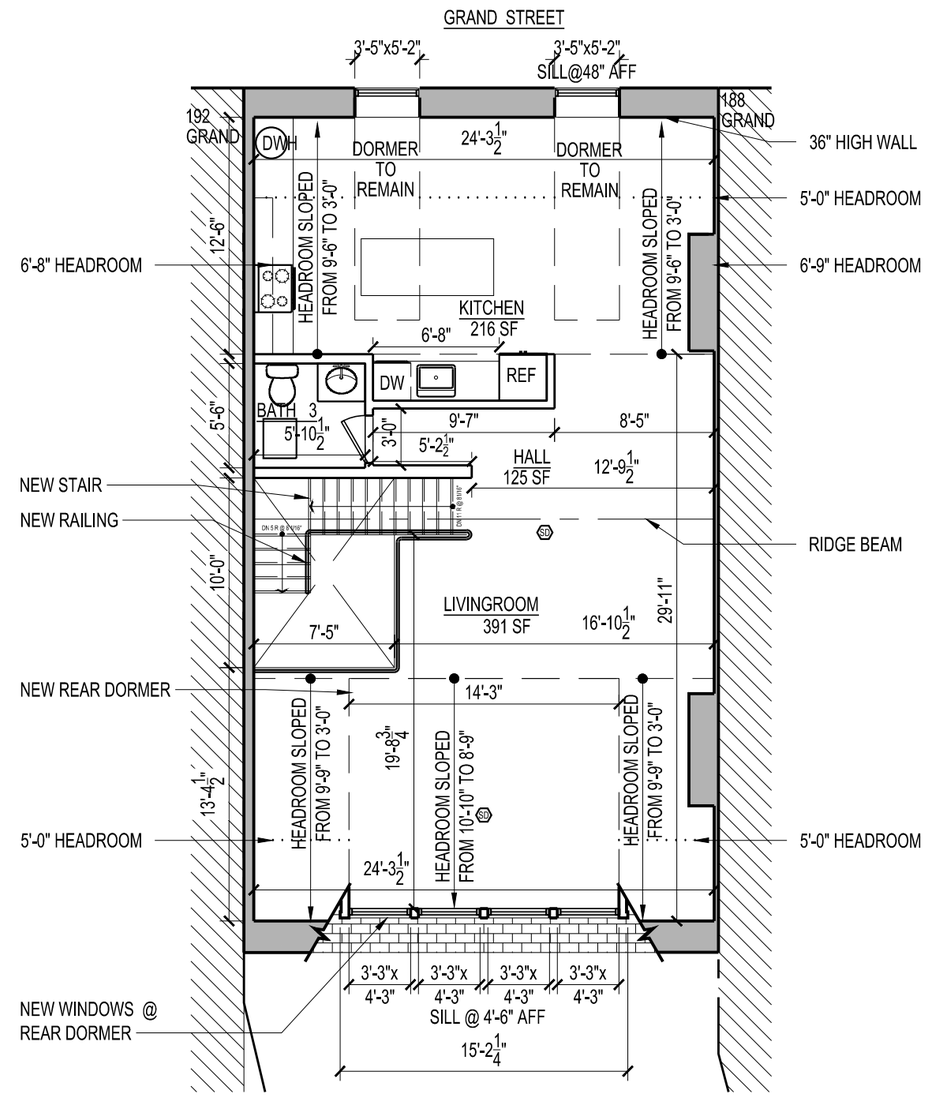

2 PROPOSED 4TH FLOOR PLAN

SCALE: 1/8" = 1'-0"

LAB ARCHITECTURE, PLLC 270 WEST 25TH ST, UNIT A NEW YORK, NY 10001 T: 646.470.4611	OWNER Jerome G. Stabile, III Realty LLC C/O Building Equity Management LLC 611 Broadway, RM 817 New York, NY 10012 Phone: 212-203-5613	PROJECT APARTMENT RENOVATION 190 GRAND STREET, APT 2 NEW YORK, NY 10013	PROPERTY INFO BLOCK: 471 LOT: 78	SHEET TITLE EXISTING AND PROPOSED 4TH FLOOR PLANS	DATE: 10.05.2015 SHEET A-04

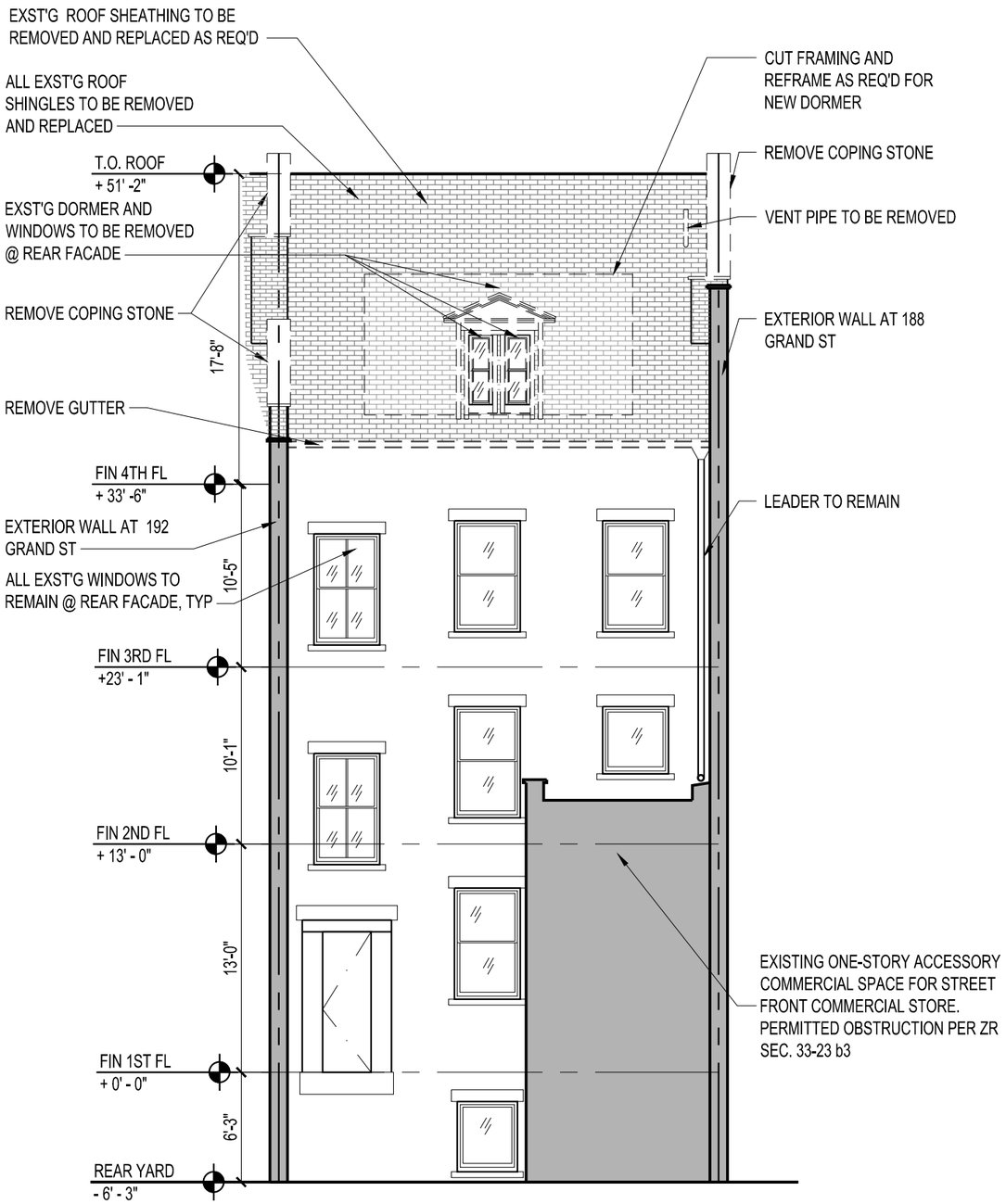

1 EXISTING REAR FACADE ELEVATION

SCALE: 1/8" = 1'-0"

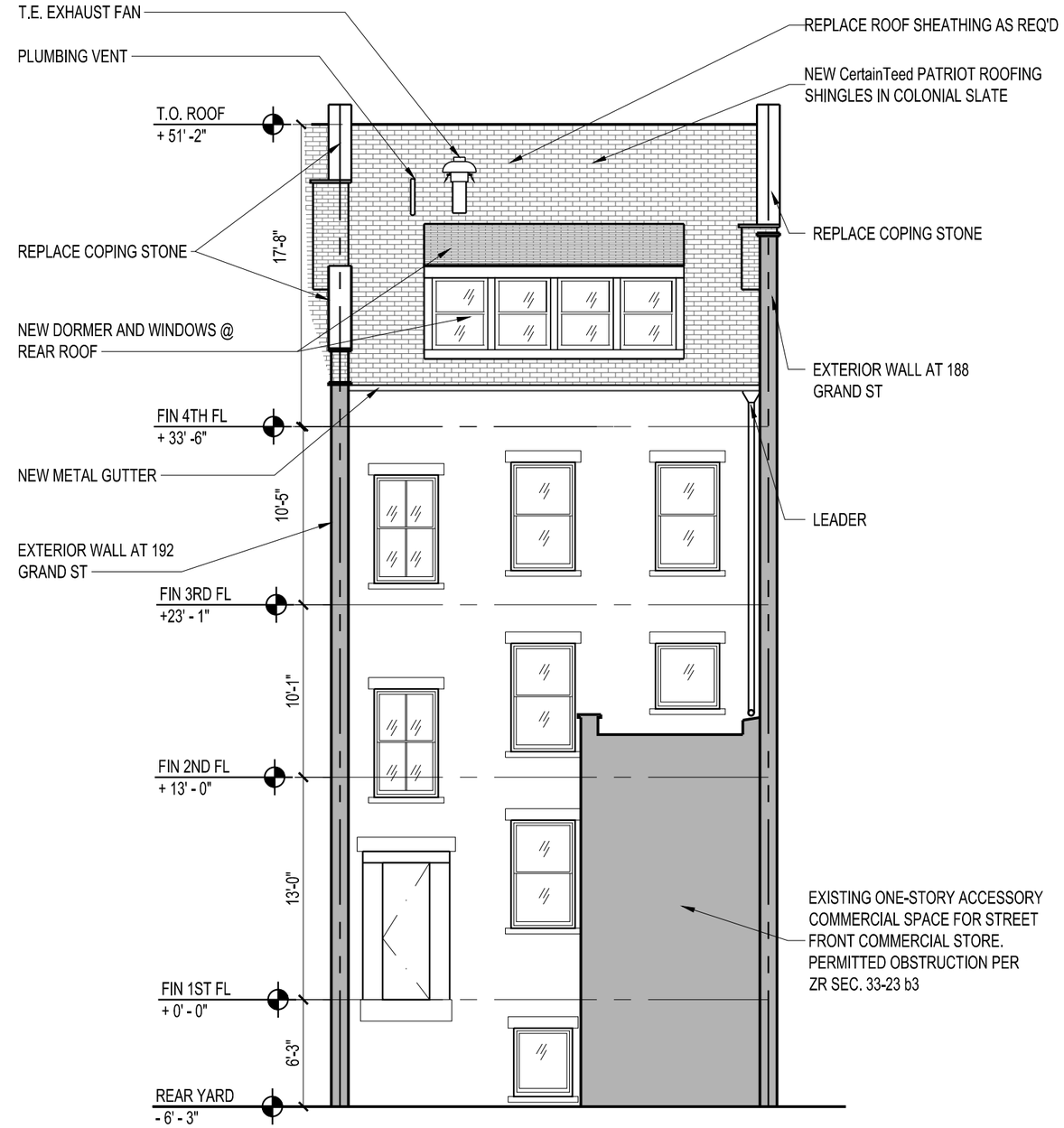

2 PROPOSED REAR FACADE ELEVATION

SCALE: 1/8" = 1'-0"

LAB ARCHITECTURE, PLLC
270 WEST 25TH ST, UNIT A
NEW YORK, NY 10001
T: 646.470.4611

OWNER
Jerome G. Stabile, III Realty LLC
C/O Building Equity Management LLC
611 Broadway, RM 817
New York, NY 10012
Phone: 212-203-5613

PROJECT
APARTMENT RENOVATION
190 GRAND STREET, APT 2
NEW YORK, NY 10013

PROPERTY INFO
BLOCK: 471 LOT: 78

SHEET TITLE
EXISTING AND PROPOSED REAR FACADE ELEVATIONS

DATE: 10.05.2015

SHEET
A-05

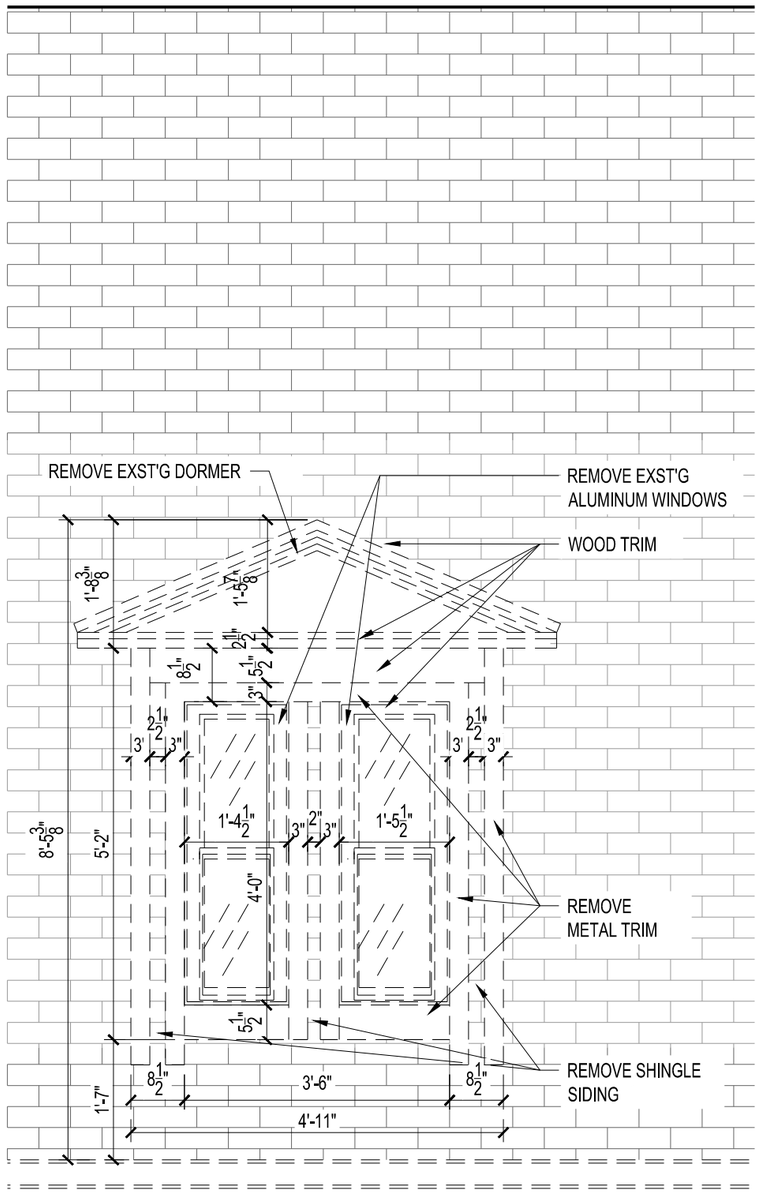

1 EXISTING REAR DORMER ELEVATION

SCALE: 1/2" = 1'-0"

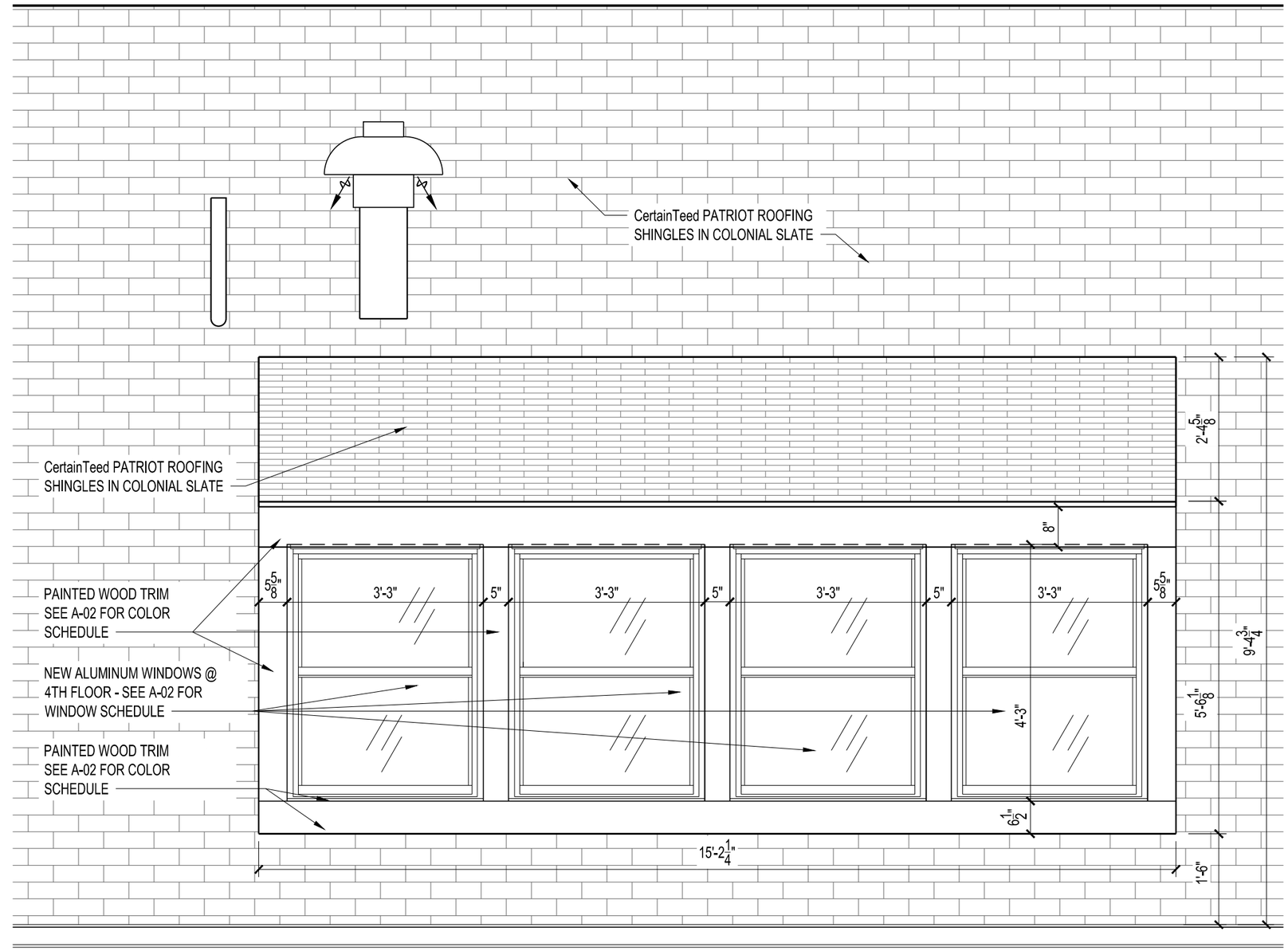

2 PROPOSED REAR DORMER ELEVATION

SCALE: 1/2" = 1'-0"

LAB ARCHITECTURE, PLLC
270 WEST 25TH ST, UNIT A
NEW YORK, NY 10001
T: 646.470.4611

OWNER
Jerome G. Stabile, III Realty LLC
C/O Building Equity Management LLC
611 Broadway, RM 817
New York, NY 10012
Phone: 212-203-5613

PROJECT
APARTMENT RENOVATION
190 GRAND STREET, APT 2
NEW YORK, NY 10013

PROPERTY INFO
BLOCK: 471 LOT: 78

SHEET TITLE
EXISTING AND PROPOSED REAR DORMER ELEVATIONS

DATE: 10.05.2015

SHEET
A-06

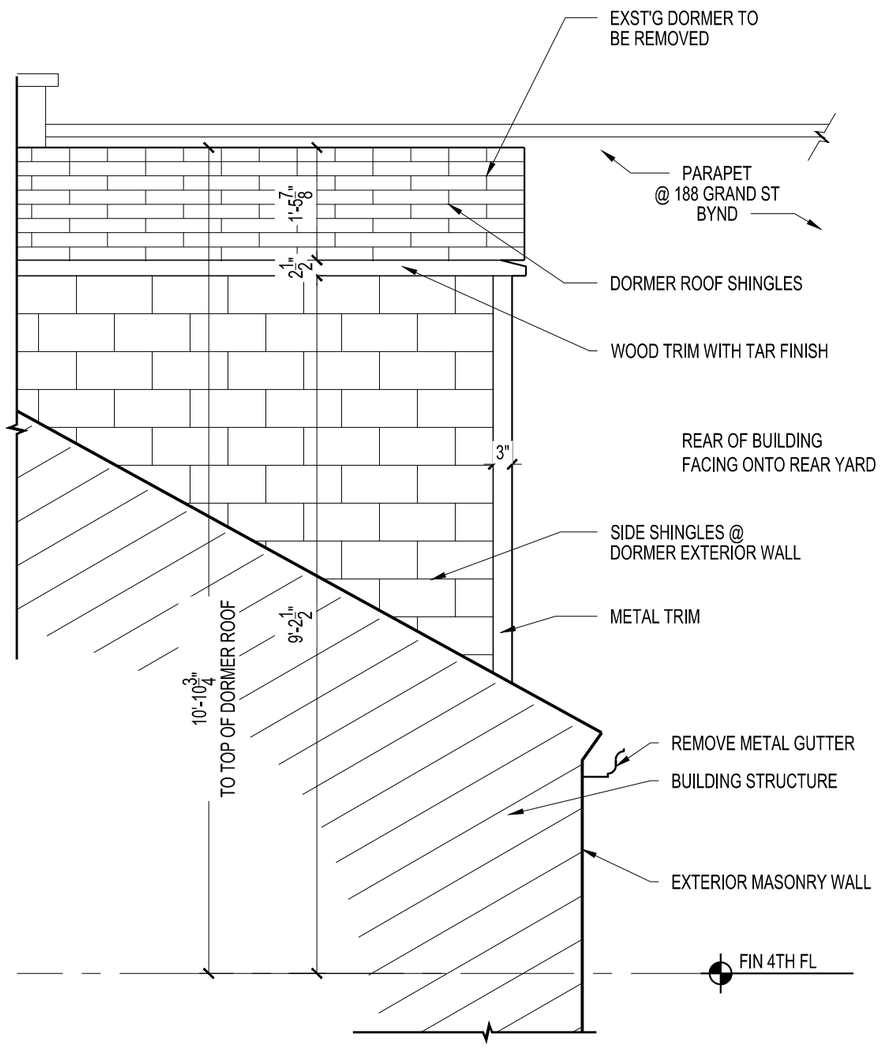

1 EXISTING REAR DORMER SIDE ELEVATION

SCALE: 1/2" = 1'-0"

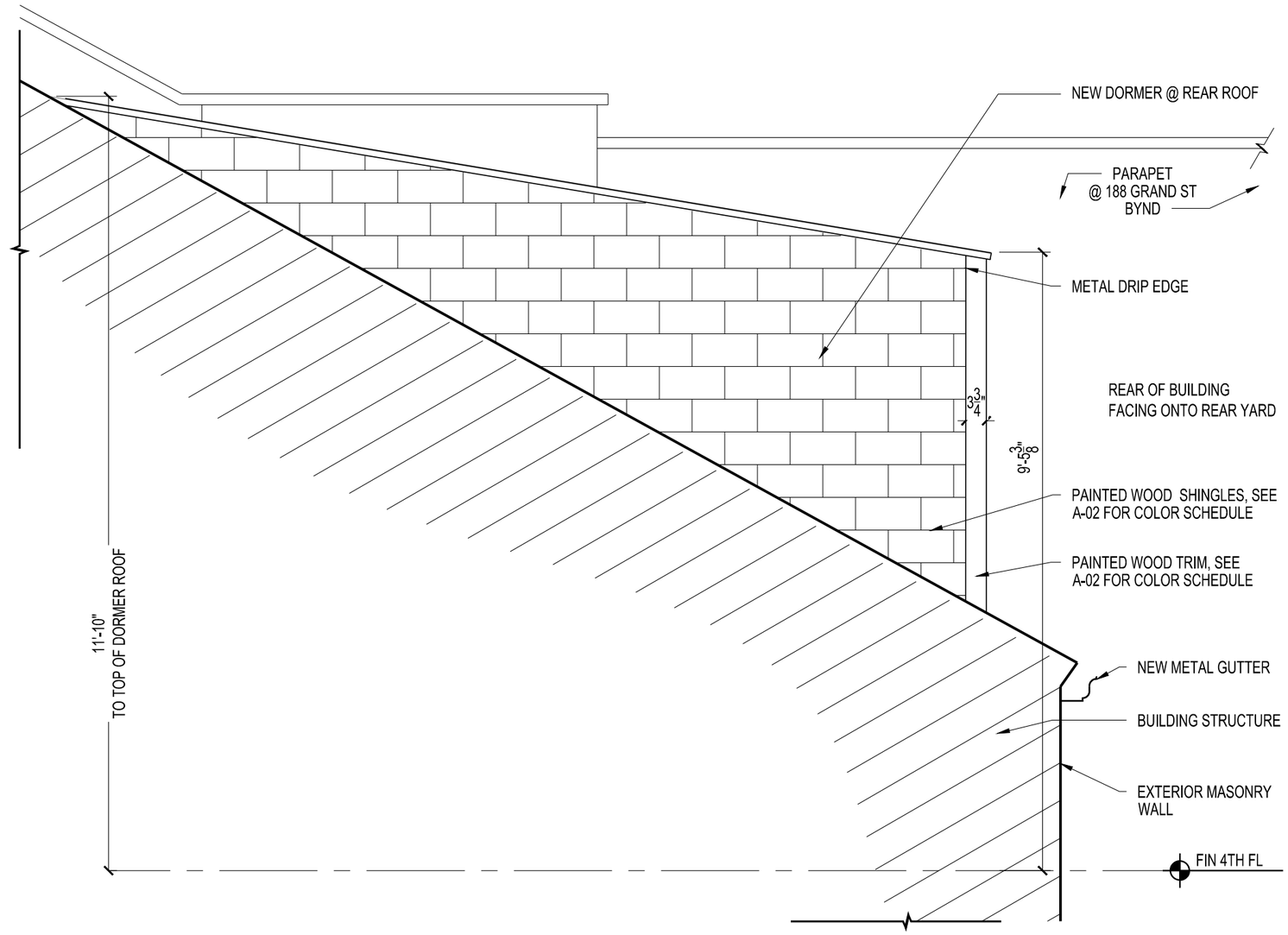

2 PROPOSED REAR DORMER SIDE ELEVATION

SCALE: 1/2" = 1'-0"

LAB ARCHITECTURE, PLLC
270 WEST 25TH ST, UNIT A
NEW YORK, NY 10001
T: 646.470.4611

OWNER
Jerome G. Stabile, III Realty LLC
C/O Building Equity Management LLC
611 Broadway, RM 817
New York, NY 10012
Phone: 212-203-5613

PROJECT
APARTMENT RENOVATION
190 GRAND STREET, APT 2
NEW YORK, NY 10013

PROPERTY INFO
BLOCK: 471 LOT: 78

SHEET TITLE
EXISTING AND PROPOSED REAR DORMER SIDE ELEVATIONS

DATE: 10.05.2015

SHEET
A-07

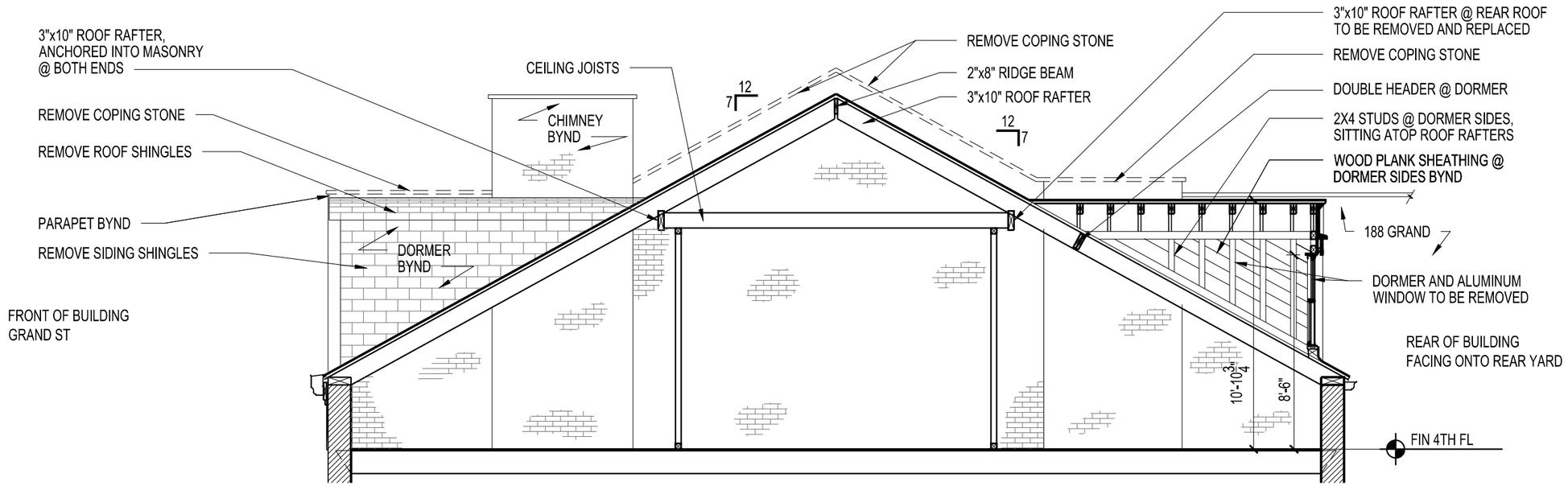

1 EXISTING BUILDING SECTION @ 4TH FLOOR

SCALE: 3/16" = 1'-0"

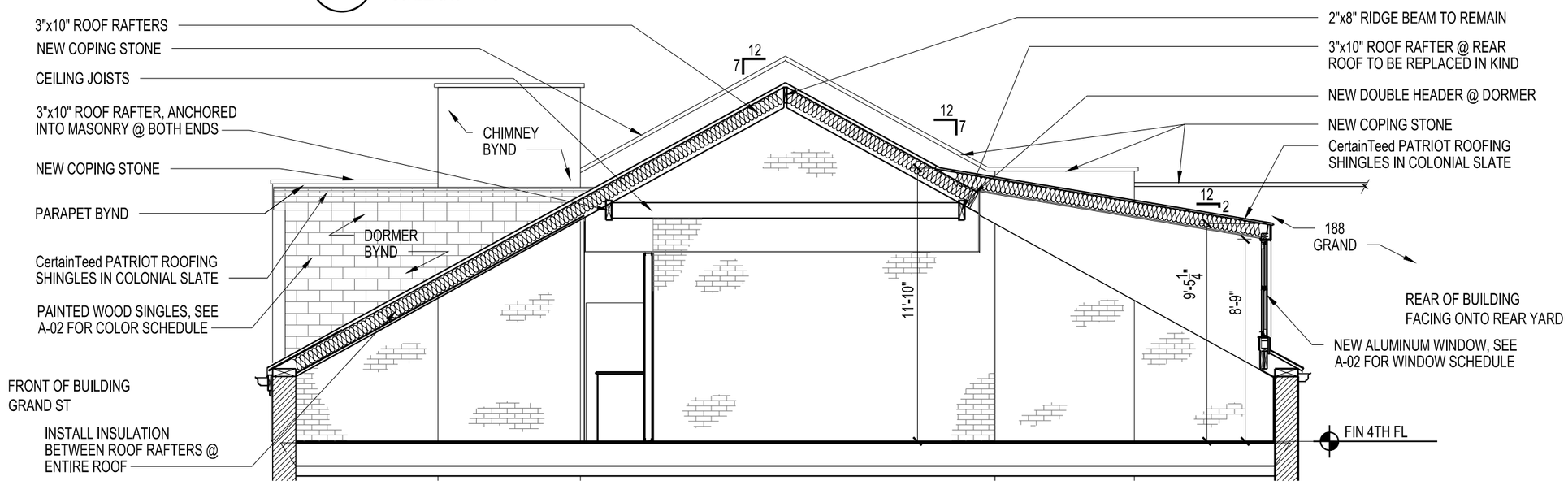

2 PROPOSED BUILDING SECTION @ 4TH FLOOR

SCALE: 3/16" = 1'-0"

LAB ARCHITECTURE, PLLC
270 WEST 25TH ST, UNIT A
NEW YORK, NY 10001
T: 646.470.4611

OWNER
Jerome G. Stabile, III Realty LLC
C/O Building Equity Management LLC
611 Broadway, RM 817
New York, NY 10012
Phone: 212-203-5613

PROJECT
APARTMENT RENOVATION
190 GRAND STREET, APT 2
NEW YORK, NY 10013

PROPERTY INFO
BLOCK: 471 LOT: 78

SHEET TITLE
EXISTING AND PROPOSED BUILDING SECTIONS @ 4TH FLOOR

DATE: 10.05.2015

SHEET
A-08

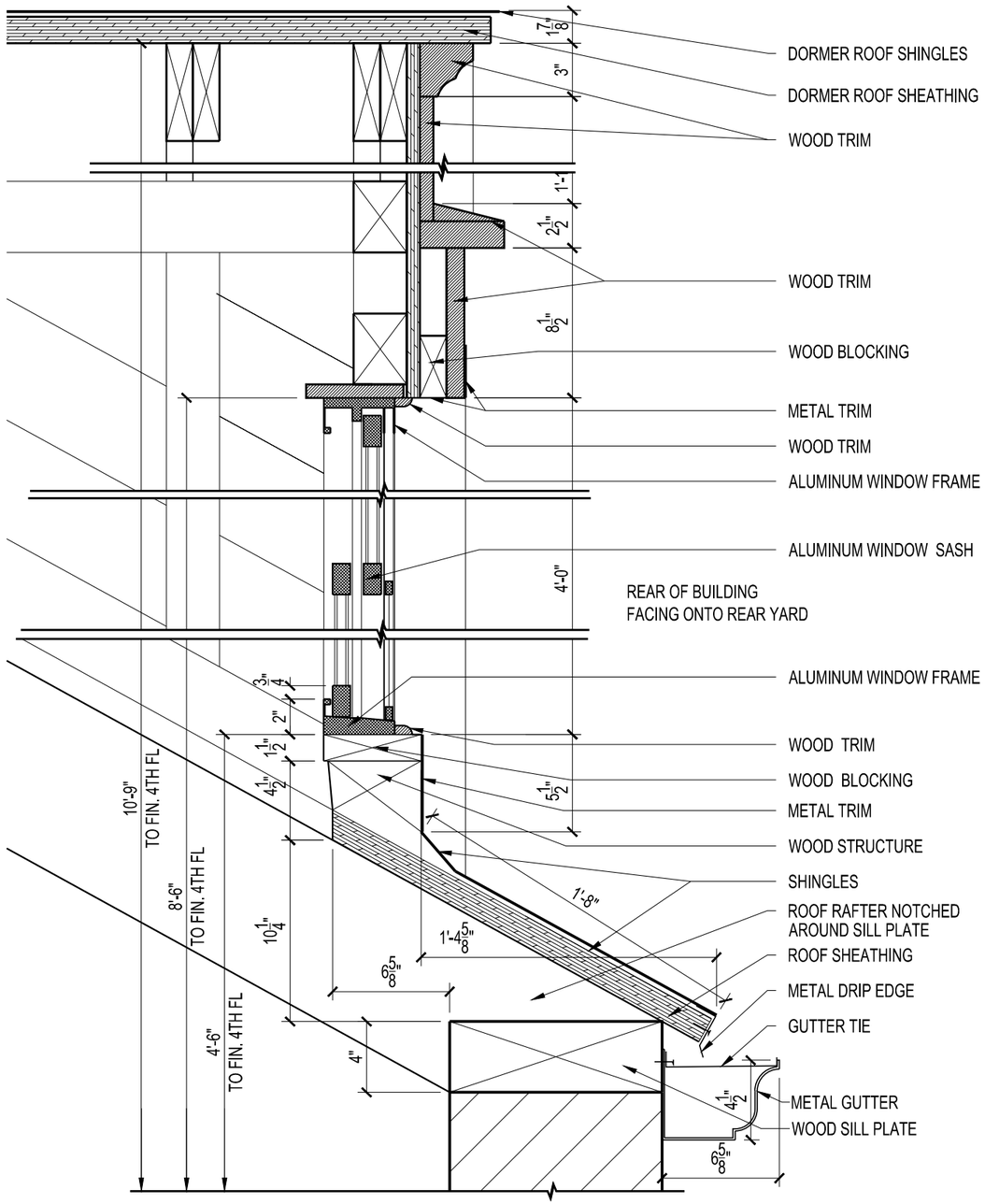

1 EXISTING DORMER SECTION @ HEAD, SILL AND EAVE

SCALE: 1-1/2" = 1'-0"

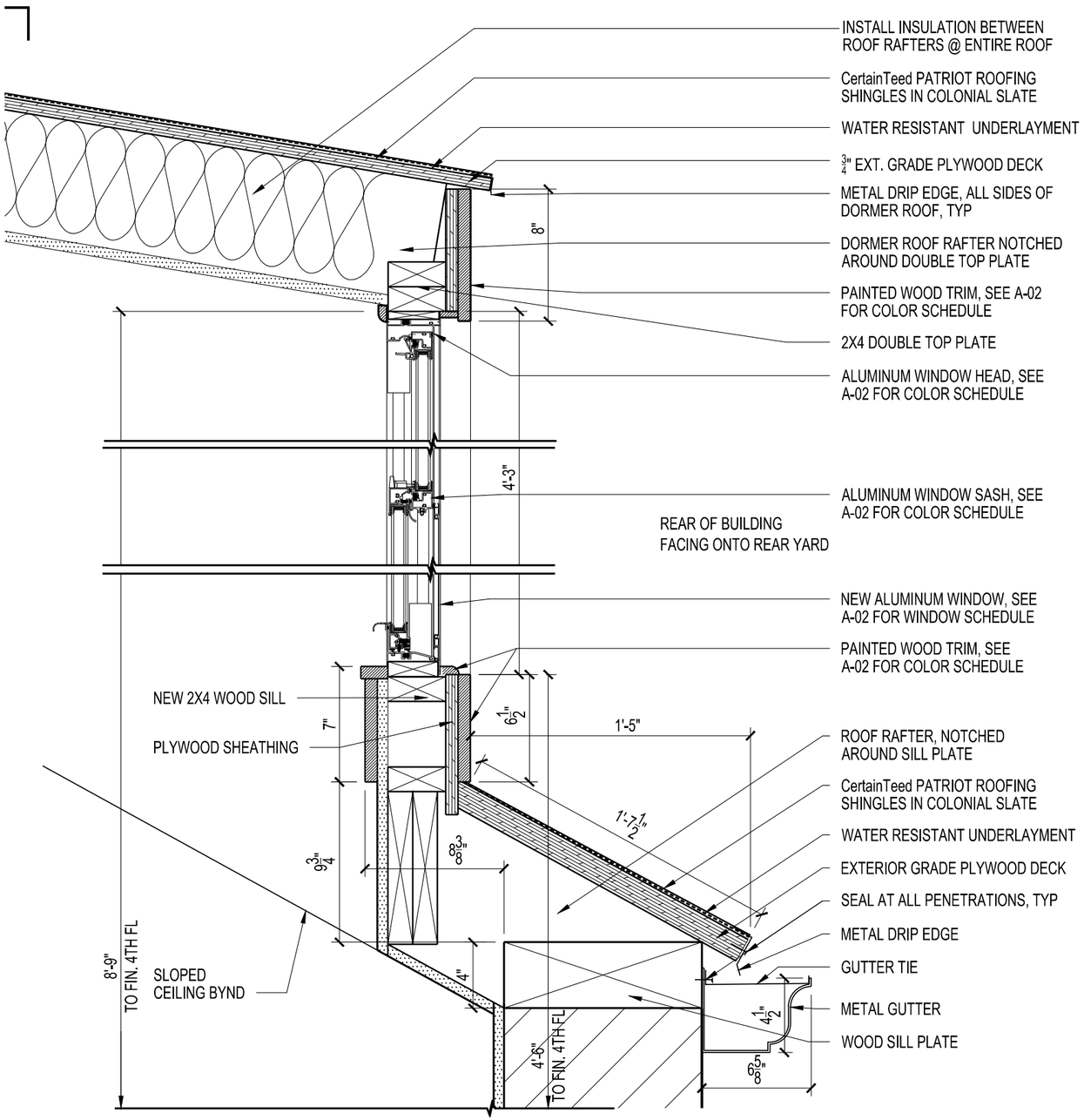

2 PROPOSED DORMER SECTION @ HEAD, SILL AND EAVE

SCALE: 1-1/2" = 1'-0"

LAB ARCHITECTURE, PLLC
270 WEST 25TH ST, UNIT A
NEW YORK, NY 10001
T: 646.470.4611

OWNER
Jerome G. Stabile, III Realty LLC
C/O Building Equity Management LLC
611 Broadway, RM 817
New York, NY 10012
Phone: 212-203-5613

PROJECT
APARTMENT RENOVATION
190 GRAND STREET, APT 2
NEW YORK, NY 10013

PROPERTY INFO
BLOCK: 471 LOT: 78

SHEET TITLE
EXISTING AND PROPOSED DORMER SECTION @ HEAD, SILL AND EAVE

DATE: 10.05.2015

SHEET
A-09

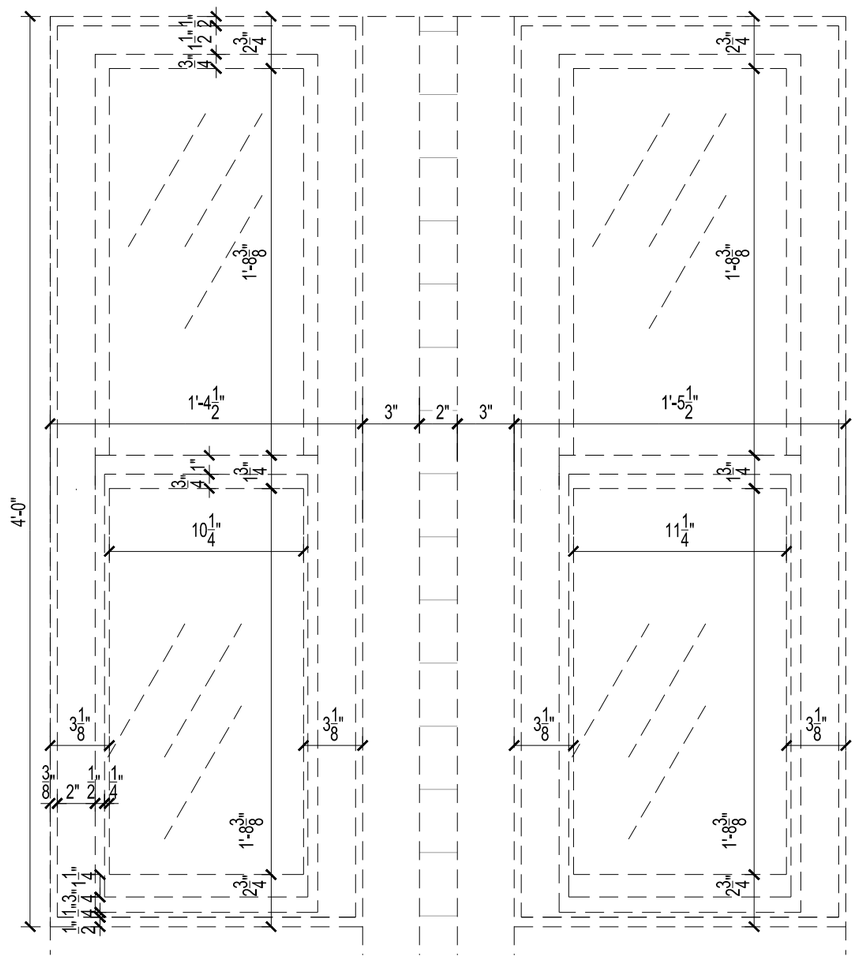

1 EXISTING REAR DORMER WINDOW ELEVATION

SCALE: 1-1/2" = 1'-0"

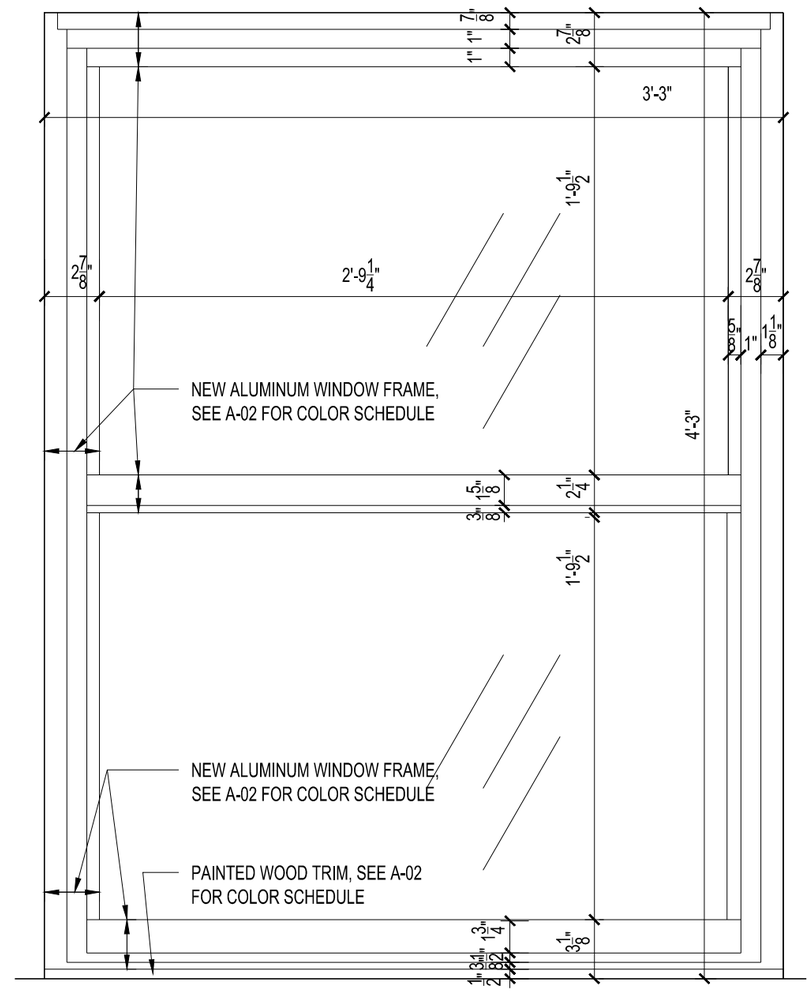

2 PROPOSED REAR DORMER WINDOW ELEVATION

SCALE: 1-1/2" = 1'-0"

LAB ARCHITECTURE, PLLC
270 WEST 25TH ST, UNIT A
NEW YORK, NY 10001
T: 646.470.4611

OWNER
Jerome G. Stabile, III Realty LLC
C/O Building Equity Management LLC
611 Broadway, RM 817
New York, NY 10012
Phone: 212-203-5613

PROJECT
APARTMENT RENOVATION
190 GRAND STREET, APT 2
NEW YORK, NY 10013

PROPERTY INFO
BLOCK: 471 LOT: 78

SHEET TITLE
EXISTING AND PROPOSED REAR DORMER WINDOW ELEVATIONS

DATE: 10.05.2015

SHEET
A-10

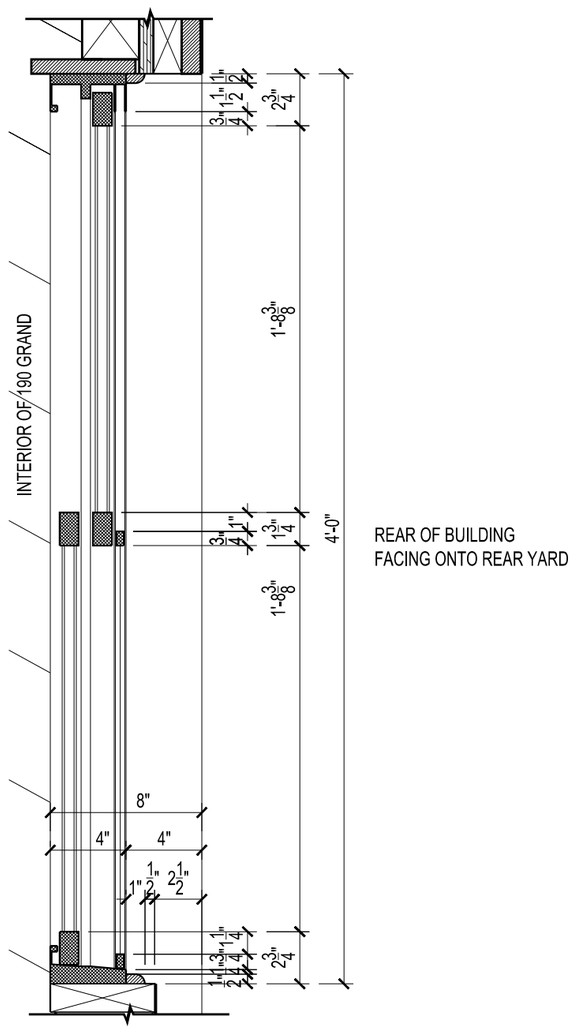

1 EXST'G REAR DORMER WINDOW SECTION

SCALE: 1-1/2" = 1'-0"

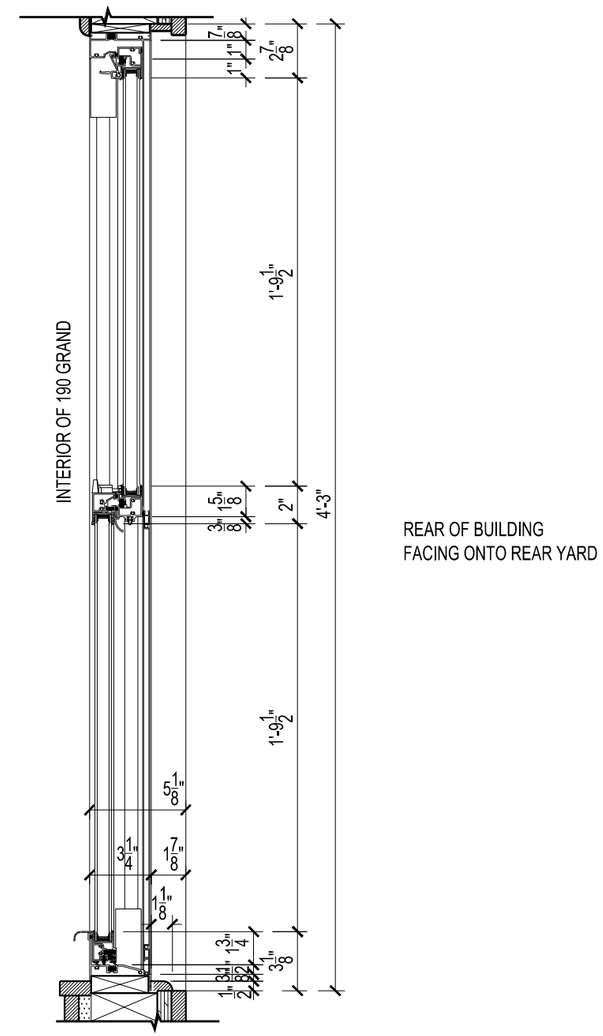

2 PROPOSED REAR DORMER WINDOW SECTION

SCALE: 1-1/2" = 1'-0"

LAB ARCHITECTURE, PLLC 270 WEST 25TH ST, UNIT A NEW YORK, NY 10001 T: 646.470.4611	OWNER Jerome G. Stabile, III Realty LLC C/O Building Equity Management LLC 611 Broadway, RM 817 New York, NY 10012 Phone: 212-203-5613	PROJECT APARTMENT RENOVATION 190 GRAND STREET, APT 2 NEW YORK, NY 10013	PROPERTY INFO BLOCK: 471 LOT: 78	SHEET TITLE EXISTING AND PROPOSED REAR DORMER WINDOW SECTION	DATE: 10.05.2015 SHEET A-11

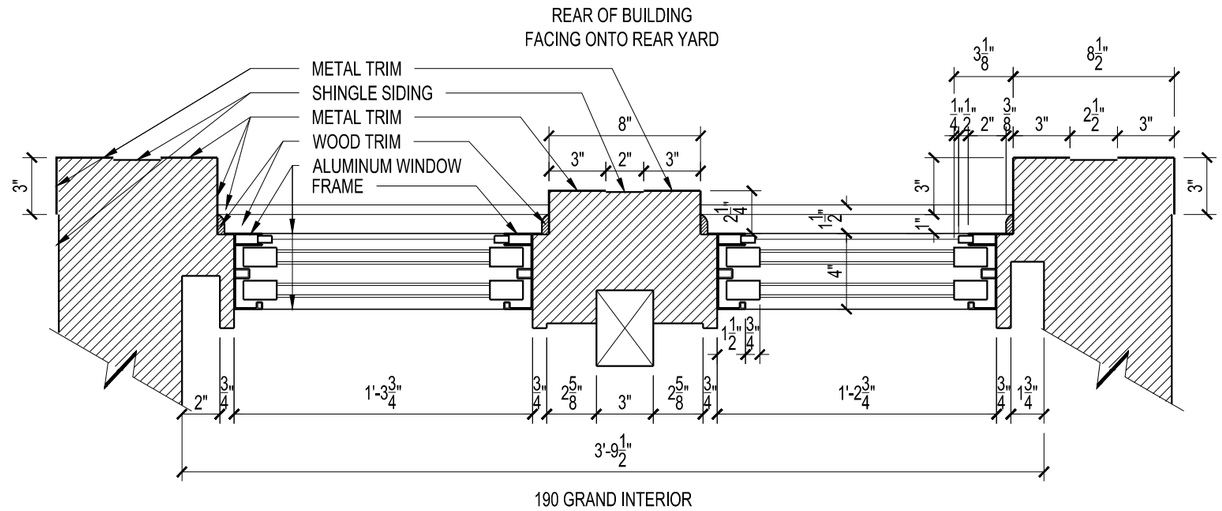

1 EXISTING WINDOW JAMB @ REAR DORMER

SCALE: 1-1/2" = 1'-0"

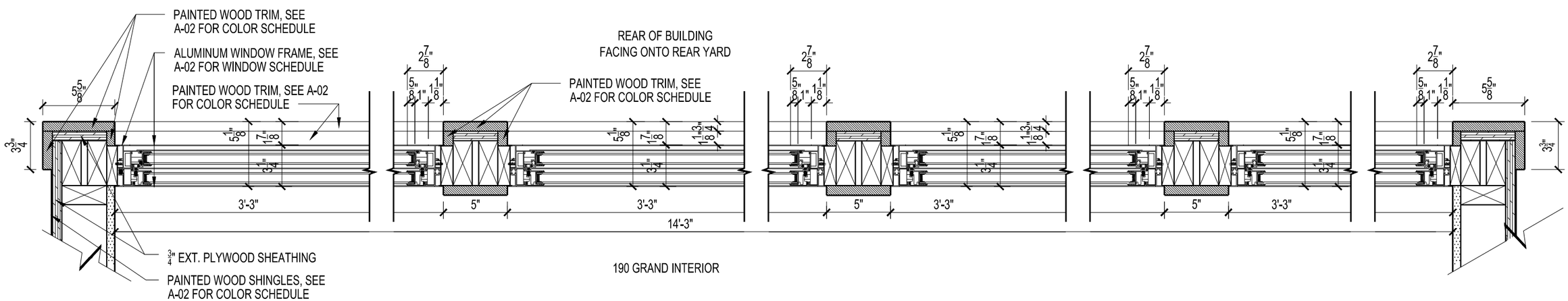

2 PROPOSED WINDOW JAMB @ REAR DORMER

SCALE: 1-1/2" = 1'-0"

LAB ARCHITECTURE, PLLC 270 WEST 25TH ST, UNIT A NEW YORK, NY 10001 T: 646.470.4611	OWNER Jerome G. Stabile, III Realty LLC C/O Building Equity Management LLC 611 Broadway, RM 817 New York, NY 10012 Phone: 212-203-5613	PROJECT APARTMENT RENOVATION 190 GRAND STREET, APT 2 NEW YORK, NY 10013	PROPERTY INFO BLOCK: 471 LOT: 78	SHEET TITLE EXISTING AND PROPOSED WINDOW JAMB @ REAR DORMER	DATE: 10.05.2015 SHEET A-12

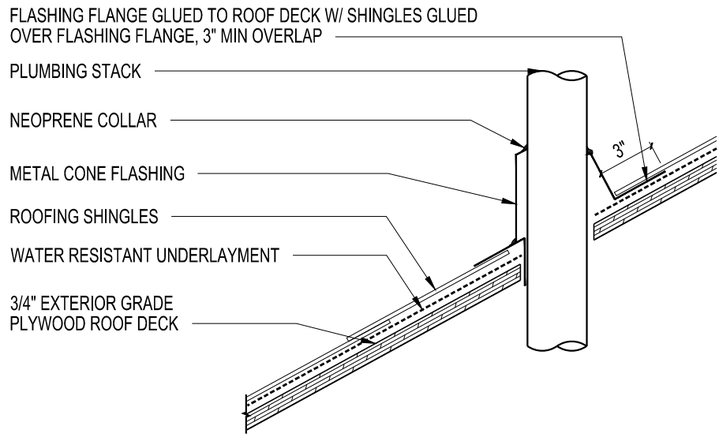

2 PLUMBING STACK VENT FLASHING DETAIL

SCALE: NTS

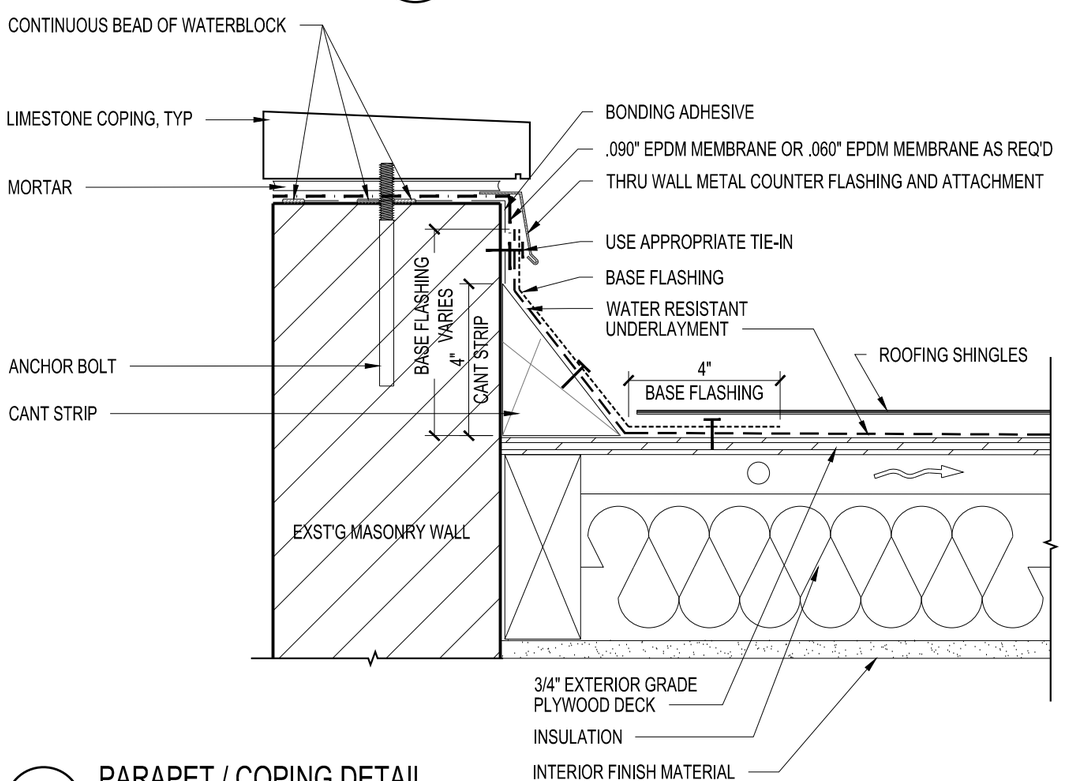

1 PARAPET / COPING DETAIL

SCALE: NTS

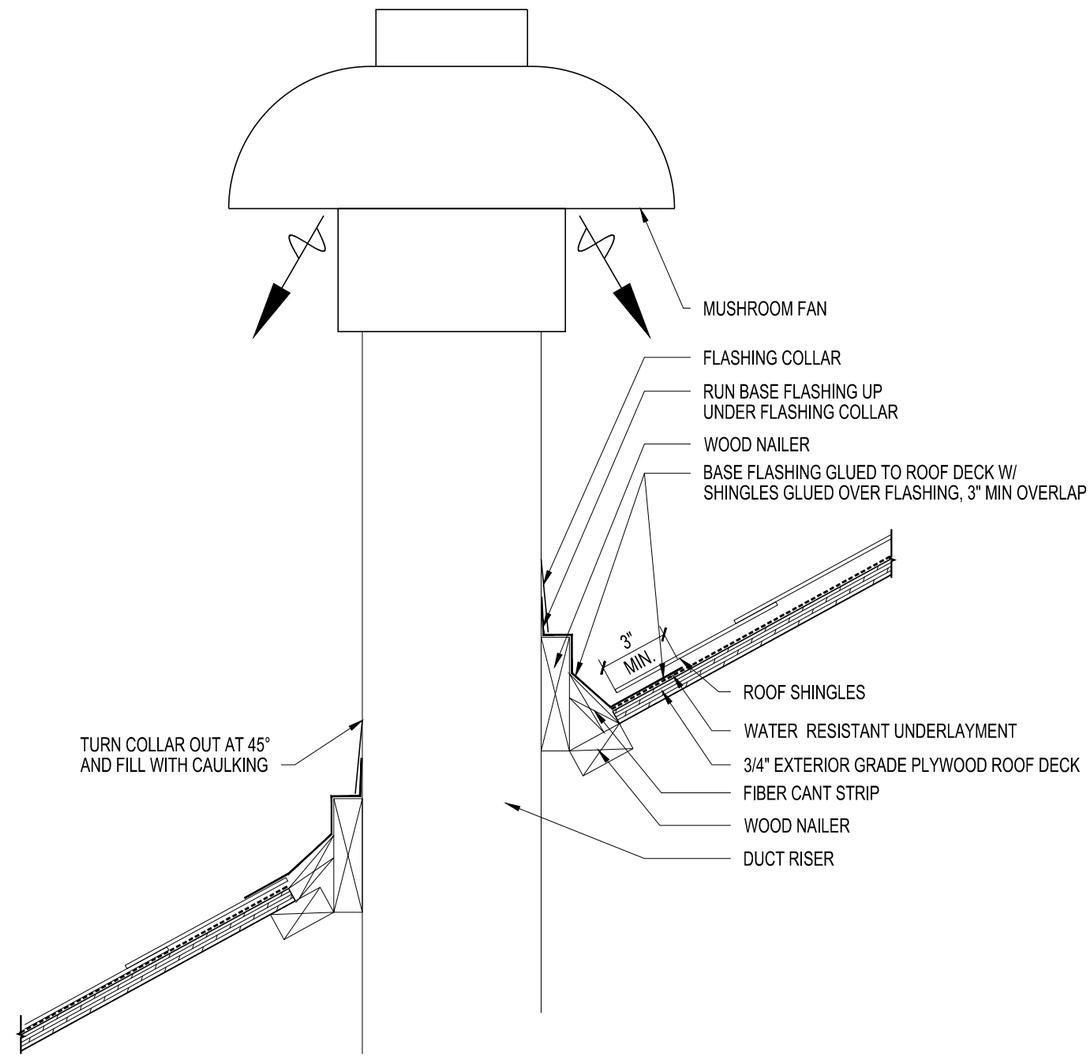

3 EXHAUST VENT FLASHING DETAIL

SCALE: NTS

LAB ARCHITECTURE, PLLC 270 WEST 25TH ST, UNIT A NEW YORK, NY 10001 T: 646.470.4611	OWNER Jerome G. Stabile, III Realty LLC C/O Building Equity Management LLC 611 Broadway, RM 817 New York, NY 10012 Phone: 212-203-5613	PROJECT APARTMENT RENOVATION 190 GRAND STREET, APT 2 NEW YORK, NY 10013	PROPERTY INFO BLOCK: 471 LOT: 78	SHEET TITLE PROPOSED FLASHING DETAILS @ VENT STACKS AND PARAPET	DATE: 10.05.2015 SHEET A-13

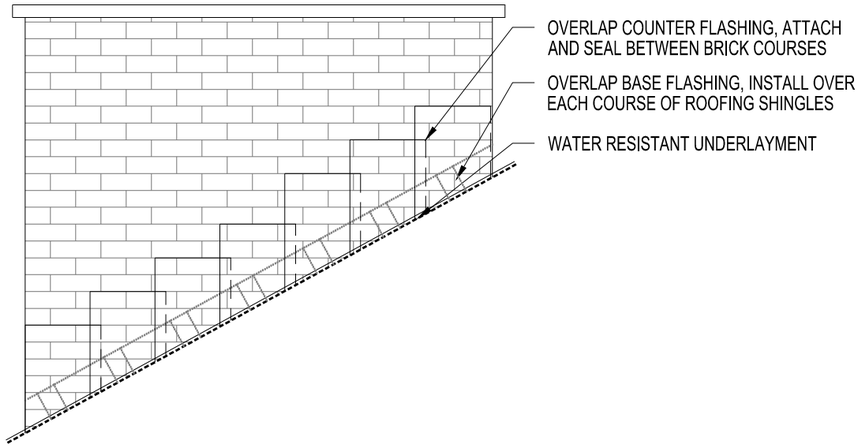

3 FLASHING @ CHIMNEY ELEVATION

SCALE: NTS

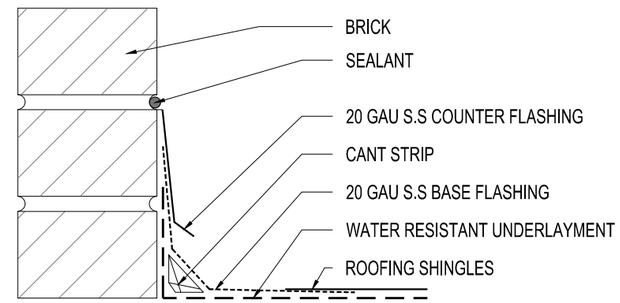

5 FLASHING DETAIL @ CHIMNEY

SCALE: NTS

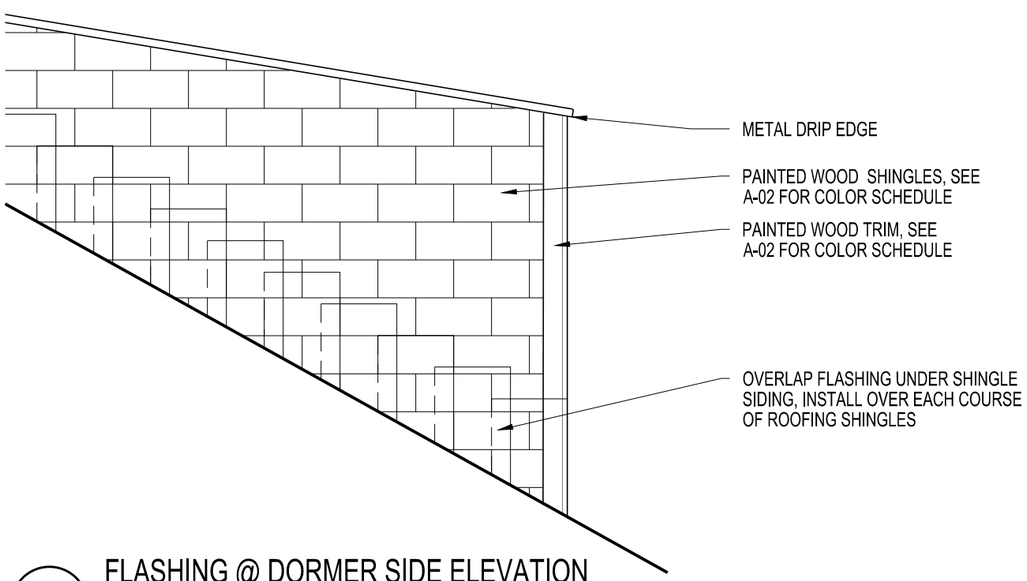

1 FLASHING @ DORMER SIDE ELEVATION

SCALE: NTS

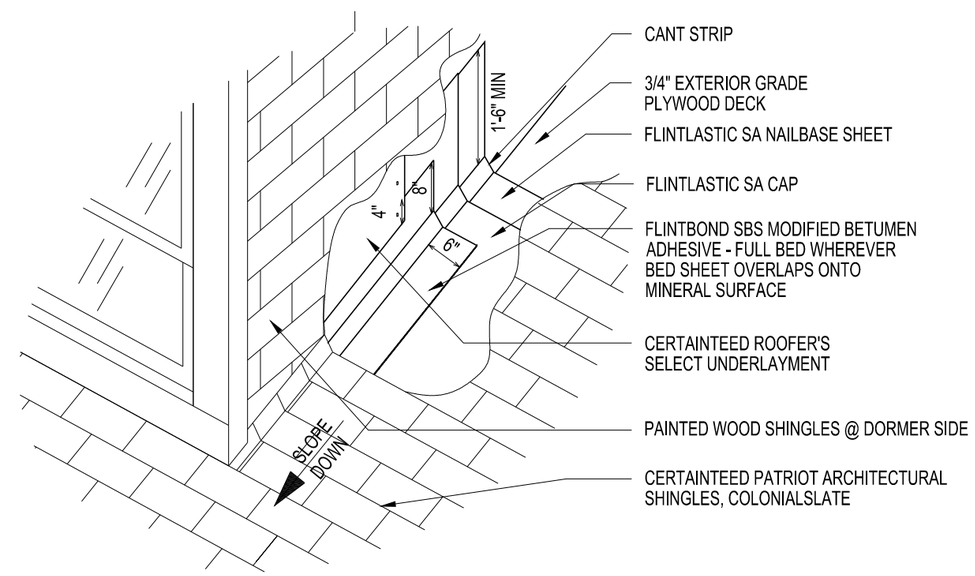

2 FLASHING DETAIL @ DORMER SIDE

SCALE: NTS

LAB ARCHITECTURE, PLLC
270 WEST 25TH ST, UNIT A
NEW YORK, NY 10001
T: 646.470.4611

OWNER
Jerome G. Stabile, III Realty LLC
C/O Building Equity Management LLC
611 Broadway, RM 817
New York, NY 10012
Phone: 212-203-5613

PROJECT
APARTMENT RENOVATION
190 GRAND STREET, APT 2
NEW YORK, NY 10013

PROPERTY INFO
BLOCK: 471 LOT: 78

SHEET TITLE
PROPOSED FLASHING DETAILS @ CHIMNEY AND DORMER SIDES

DATE: 10.05.2015

SHEET
A-14