CONTENT

01_ RD1 RENDERING
02_Z001- STUDY AREA 1 (FRONT ELEVATIONS)
03_Z002 - STUDY AREA 2 (REAR ELEVATIONS)
04_Z003- SANDBORN MAP, HISTORIC PICTURE / SITE PICTURE
05_Z004-SITE PLAN / BLOCK DIAGRAM
06_Z005-GATES AVENUE STREETSCAPE
07_Z006-CORNER BLDG. STREETSCAPE
08_A-001.00 FRONT ELEVATION GATES AVENUE
09_A-003.00 SIDE ELEVATION (GRANT AVENUE)
10_A-002.00 REAR ELEVATION
11_A-004.00 EXISTING RAILINGS SAMPLE/ PROPOSED RAILING
12_A-005.00 PROPOSED RAILINGS
13_A-006.00 EXISTING WINDOWS PR/ PROPOSED WINDOWS
14_A-007.00 EXISTING DOORS / PROPOSED DOORS & WALL DETAILS
15_A-008.00 EXISTING SIDEWALK AND CURBS EXISTING BRICK AND STONE
16_A-009.00 EXISTING CORNICE / PROPOSED CORNICE & REAR ELEVATION ANALYSIS
17_A-010.00 CELLAR / BASEMENT FLOOR PLANS
18_A-011.00 FIRST FLOOR / SECOND FLOOR
19_A-012.00 THIRD FLOOR PLAN / ROOF PLAN

THE ARCHITECT SHALL NOT HAVE CONTROL OR CHARGE OF AND SHALL NOT BE RESPONSIBLE FOR CONSTRUCTION MEANS, METHODS, DEVIATIONS, TECHNIQUES, SEQUENCES OR PROCEDURES, OR FOR SAFETY PRECAUTIONS AND PROGRAMS IN CONNECTIONS WITH THE WORK, FOR THE ACTS OR OMISSIONS OF THE CONTRACTOR, SUB-CONTRACTORS OR ANY OTHER PERSONS PERFORMING ANY OF THE WORK, OR FOR THE FAILURE OF THEM TO CARRY OUT THE WORK IN ACCORDANCE WITH THE CONTRACT DOCUMENTS. ALWAYS USE DIMENSIONS AS SHOWN. DRAWINGS ARE NOT TO BE SCALED. GERALD J. CALIENDO, ARCHITECT, P.C. AND ITS PRINCIPAL/EMPLOYEES WERE NOT RETAINED FOR ANY CONSTRUCTION SUPERVISION.

Gerald J. Caliendo, R.A., A.I.A.
Architect, P.C.
Architecture
Interior Design
Code Consultant
Building Dept. Expediting
138-72 Queens Boulevard
Briarwood N.Y. 11435
Tel. (718) 268-9098
Fax (718) 268-9097
www.caliendoarchitects.com

CONSULTANTS:

OWNER:
145 Gates LLC
124-04 Metropolitan Av
Kew Garden, NY

DRAWING TITLE: TITLE PAGE & RENDERING

PROJECT ADDRESS: 145 GATES AVENUE BROOKLYN, NY

NO.	DATE	REVISION

DRAWN BY: BC
CHECKED BY: GJC
JOB NO.: 12212
SCALE: AS NOTED
DATE: 07-20-15

SEAL:

DOB:

DRAWING No.: 2 OF 19

RD1

1.

2.

3.

4.

CLINTON HILL HISTORIC DISTRICT

Building of Historic Interest

Site

Pictures taken

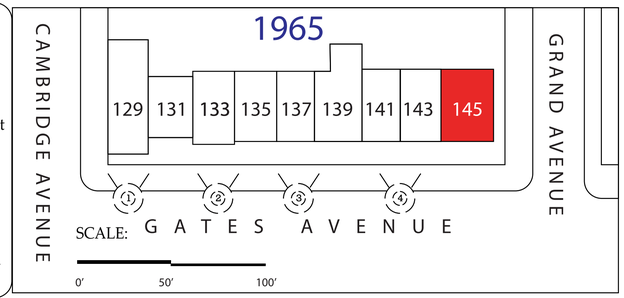

THE ARCHITECT SHALL NOT HAVE CONTROL OR CHARGE OF AND SHALL NOT BE RESPONSIBLE FOR CONSTRUCTION MEANS, METHODS, DEVIATIONS, TECHNIQUES, SEQUENCES OR PROCEDURES, OR FOR SAFETY PRECAUTIONS AND PROGRAMS IN CONNECTIONS WITH THE WORK, FOR THE ACTS OR OMISSIONS OF THE CONTRACTOR, SUB- CONTRACTORS OR ANY OTHER PERSONS PERFORMING ANY OF THE WORK, OR FOR THE FAILURE OF THEM TO CARRY OUT THE WORK IN ACCORDANCE WITH THE CONTRACT DOCUMENTS. ALWAYS USE DIMENSIONS AS SHOWN. DRAWINGS ARE NOT TO BE SCALED. GERALD J. CALIENDO ARCHITECT, P.C. AND ITS PRINCIPAL/EMPLOYEES WERE NOT RETAINED FOR ANY CONSTRUCTION SUPERVISION.

Gerald J. Caliendo, R.A., A.I.A.
Architect, P.C.

Architecture
Interior Design
Code Consultant
Building Dept. Expediting

138-72 Queens Boulevard
Briarwood N.Y. 11435

Tel. (718) 268-9098
Fax (718) 268-9097
www.caliendoarchitects.com

CONSULTANTS:

OWNER:
145 Gates LLC
124-04 Metropolitan Av
Kew Garden, NY

NO.	DATE	REVISION

DRAWING TITLE: STUDY AREA 1

PROJECT ADDRESS: 145 GATES AVENUE BROOKLYN, NY

DRAWN BY: BC
CHECKED BY: GJC
JOB NO.: 12212
SCALE: AS NOTED
DATE: 07-20-15

SEAL:

DOB:

DRAWING No.: 2 OF 19

Z-001.00

5.

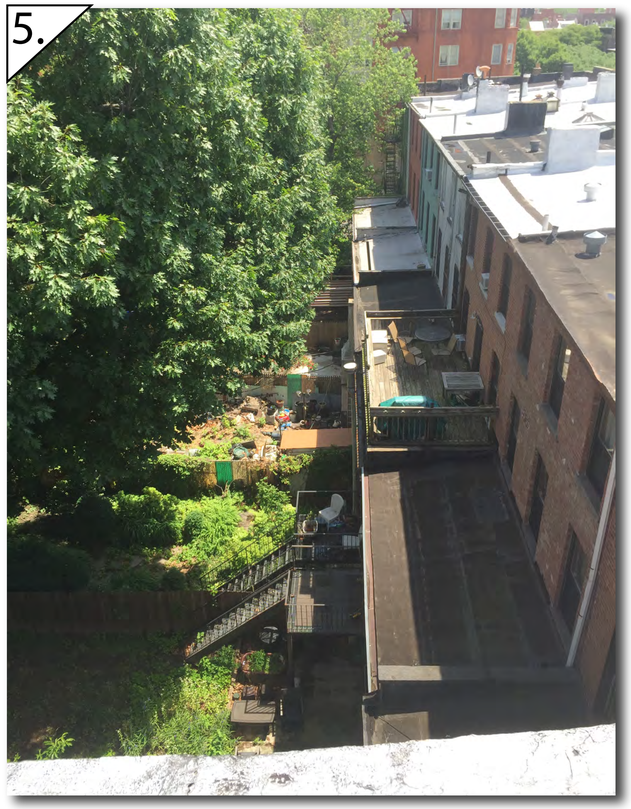

6.

7.

8.

CLINTON HILL HISTORIC DISTRICT

Building of Historic Interest

Site

Pictures taken

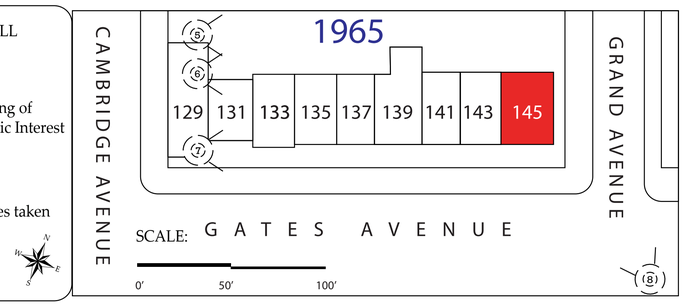

THE ARCHITECT SHALL NOT HAVE CONTROL OR CHARGE OF AND SHALL NOT BE RESPONSIBLE FOR CONSTRUCTION MEANS, METHODS, DEVIATIONS, TECHNIQUES, SEQUENCES OR PROCEDURES, OR FOR SAFETY PRECAUTIONS AND PROGRAMS IN CONNECTIONS WITH THE WORK, FOR THE ACTS OR OMISSIONS OF THE CONTRACTOR, SUB-CONTRACTORS OR ANY OTHER PERSONS PERFORMING ANY OF THE WORK, OR FOR THE FAILURE OF THEM TO CARRY OUT THE WORK IN ACCORDANCE WITH THE CONTRACT DOCUMENTS. ALWAYS USE DIMENSIONS AS SHOWN. DRAWINGS ARE NOT TO BE SCALED. GERALD J. CALIENDO ARCHITECT, P.C. AND ITS PRINCIPAL/EMPLOYEES WERE NOT RETAINED FOR ANY CONSTRUCTION SUPERVISION.

Gerald J. Caliendo, R.A., A.I.A.
Architect, P.C.

Architecture
Interior Design
Code Consultant
Building Dept. Expediting

138-72 Queens Boulevard
Briarwood N.Y. 11435

Tel. (718) 268-9098
Fax (718) 268-9097
www.caliendoarchitects.com

CONSULTANTS:

OWNER:
145 Gates LLC
124-04 Metropolitan Av
Kew Garden, NY

DRAWING TITLE: STUDY AREA 2

PROJECT ADDRESS: 145 GATES AVENUE BROOKLYN, NY

NO.	DATE	REVISION

DRAWN BY: BC
CHECKED BY: GJC
JOB NO.: 12212
SCALE: AS NOTED
DATE: 07-20-15

SEAL:

DOB:

DRAWING No.: 3 OF 19

Z-002.00

145 GATES AVENUE

PROPOSED FOUR STORY AND CELLAR BRICK AND BLOCK ONE FAMILY DWELLING LOCATED IN THE CLINTON HILL HISTORIC DISTRICT RESIDENTIAL AREA WITH A PREDOMINANT HISTORICAL INFLUENCES OF ITALIANETTE AND GREEK REVIVAL STYLE

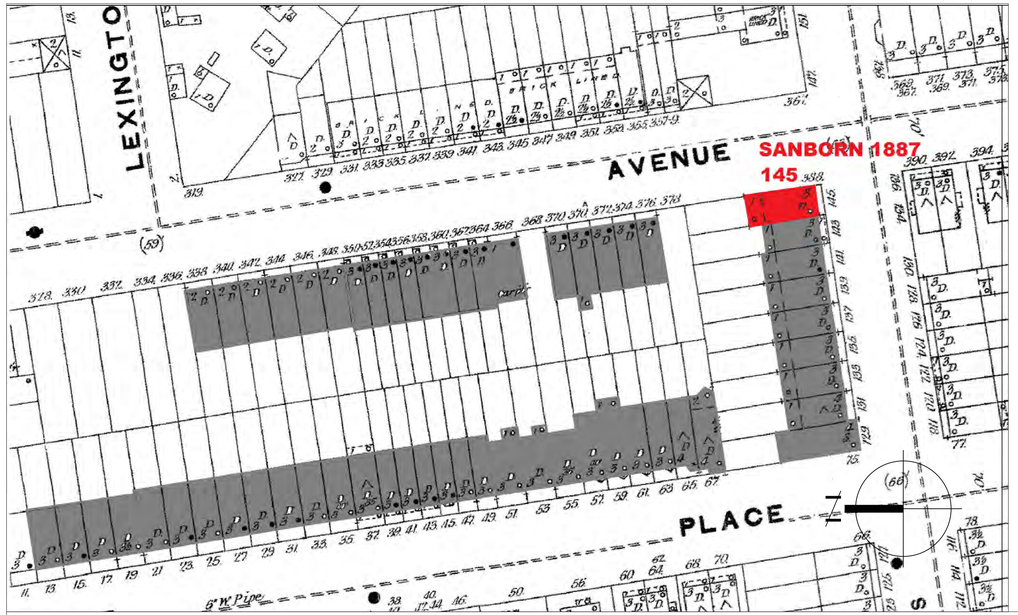

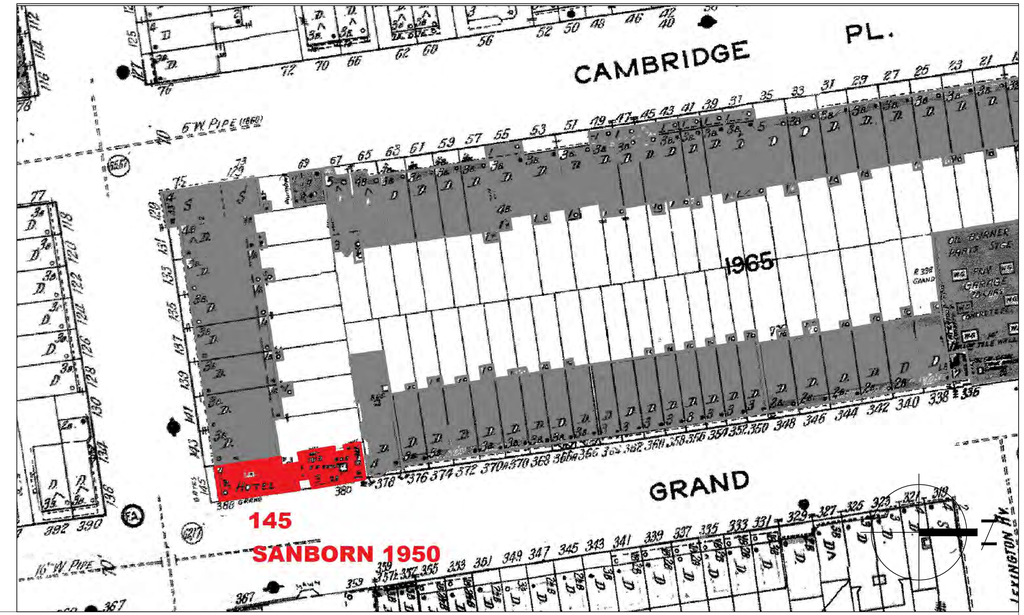

145 GATES AV. FROM YEAR 1938

135 GATES AV.FROM YEAR 1938 SAMPLE ROW HOUSE

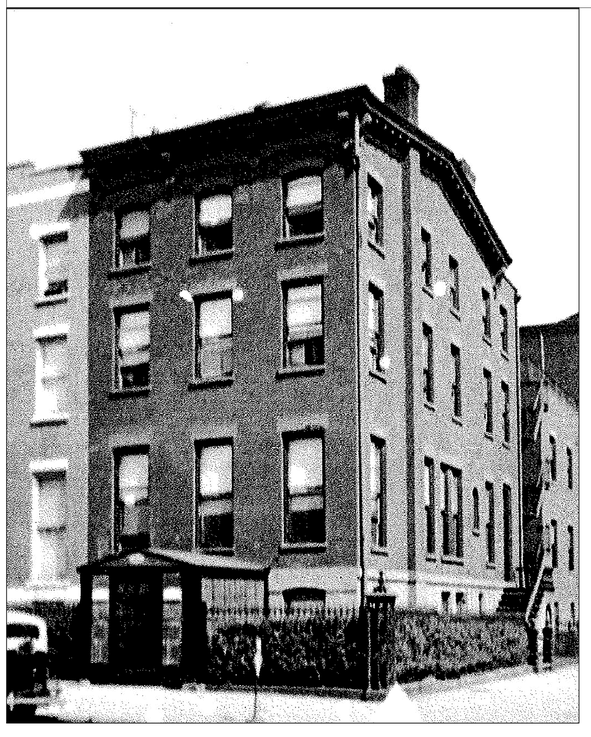

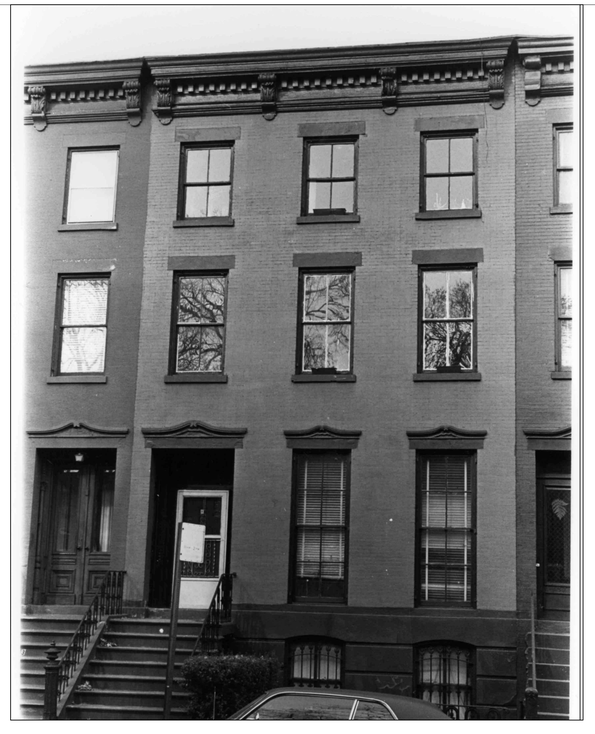

CORNER OF GATES AND GRAND AVENUE IN THE HISTORIC DISTRICT OF CLINTON HILL

THE ARCHITECT SHALL NOT HAVE CONTROL OR CHARGE OF AND SHALL NOT BE RESPONSIBLE FOR CONSTRUCTION MEANS, METHODS, DEVIATIONS, TECHNIQUES, SEQUENCES OR PROCEDURES, OR FOR SAFETY PRECAUTIONS AND PROGRAMS IN CONNECTIONS WITH THE WORK, FOR THE ACTS OR OMISSIONS OF THE CONTRACTOR, SUB-CONTRACTORS OR ANY OTHER PERSONS PERFORMING ANY OF THE WORK, OR FOR THE FAILURE OF THEM TO CARRY OUT THE WORK IN ACCORDANCE WITH THE CONTRACT DOCUMENTS. ALWAYS USE DIMENSIONS AS SHOWN. DRAWINGS ARE NOT TO BE SCALED. GERALD J. CALIENDO ARCHITECT, P.C. AND ITS PRINCIPAL/EMPLOYEES WERE NOT RETAINED FOR ANY CONSTRUCTION SUPERVISION.

Gerald J. Caliendo, R.A., A.I.A.
Architect, P.C.
Architecture
Interior Design
Code Consultant
Building Dept. Expediting
138-72 Queens Boulevard
Briarwood N.Y. 11435
Tel. (718) 268-9098
Fax (718) 268-9097
www.caliendoarchitects.com

CONSULTANTS:

OWNER:
145 Gates LLC
124-04 Metropolitan Av
Kew Garden, NY

DRAWING TITLE:
LPC MAP, SANDBORN MAPS
HISTORIC PICTURE/ SITE PIC

PROJECT ADDRESS:
145
GATES AVENUE
BROOKLYN, NY

NO.	DATE	REVISION

DRAWN BY: BC
CHECKED BY: GJC
JOB NO.: 12212
SCALE: AS NOTED
DATE: 3-13-15

SEAL:

DOB:

DRAWING No.: 4 OF 19

Z-003.00

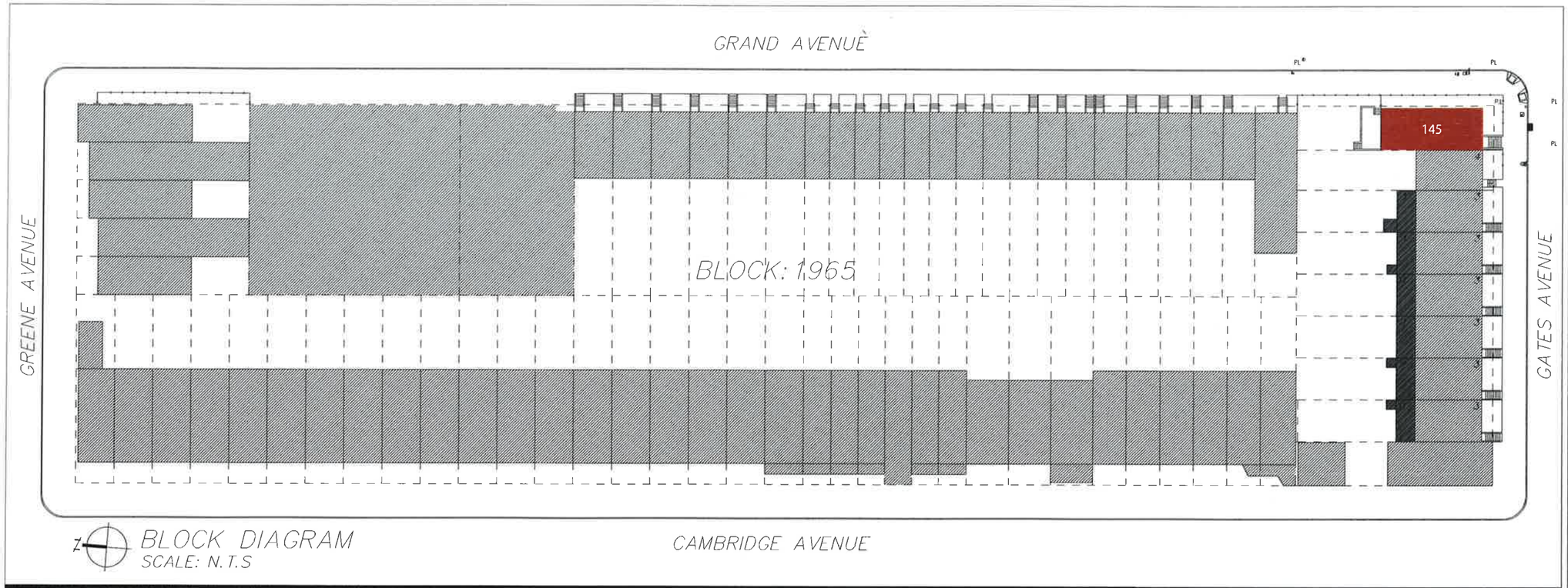

BLOCK DIAGRAM
SCALE: N.T.S

GRASSCRETE IS A SUSTAINABLE DESIGN SOLUTION FOR AN ECO-FRIENDLY ENVIROMENT. THIS METHOD OF PLANNING, PROVIDES AND BENEFITIS THE PEOPLE, PLANET AND PROFIT. WHEN GRASSCRETE IS APPLIED, ENVIROMENTAL ISSUES ARE SIGNIFICANTLY REDUCED. GRASSCRETE PROVIDES RESOLVES COMPLICATED ENVIROMENTAL IMPACT ISSUES SUCH AS STORM WATER RUNOFF, HEAT ISLAND EFFECT, ECOLOGICAL RECYCLED CONTENT AND STRUCTURAL INTEGRITY WHICH REQUIRES LOW MAINTENANCE. GRASSCRETE IS ALSO AN AESTHETIC APPROACH IN BLENDING LANDSCAPE AND ARCHITECTURE.

Clinton Hill Historic District

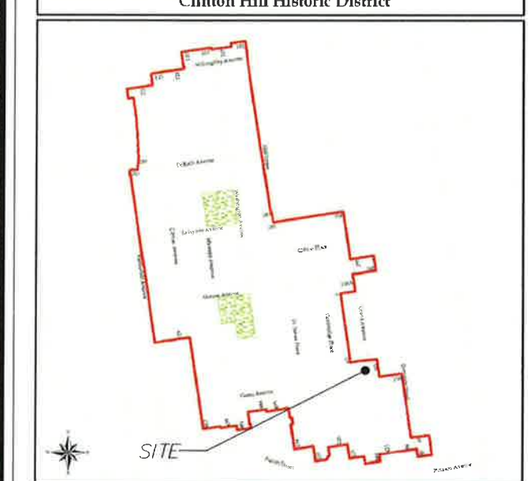

Clinton Hill Historic District
Brooklyn
Designated November 10, 1981

Historic District Boundaries

THE ARCHITECT SHALL NOT HAVE CONTROL OR CHARGE OF AND SHALL NOT BE RESPONSIBLE FOR CONSTRUCTION MEANS, METHODS, DEVIATIONS, TECHNIQUES, SEQUENCES OR PROCEDURES, OR FOR SAFETY PRECAUTIONS AND PROGRAMS IN CONNECTIONS WITH THE WORK, FOR THE ACTS OR OMISSIONS OF THE CONTRACTOR, SUB-CONTRACTORS OR ANY OTHER PERSONS PERFORMING ANY OF THE WORK, OR FOR THE FAILURE OF THEM TO CARRY OUT THE WORK IN ACCORDANCE WITH THE CONTRACT DOCUMENTS. ALWAYS USE DIMENSIONS AS SHOWN. DRAWINGS ARE NOT TO BE SCALED. GERALD J. CALIENDO

Gerald J. Caliendo, R.A., A.I.A.
Architect, P.C.
Architecture
Interior Design
Code Consultant
Building Dept
Expediting
138-72 Queens Boulevard
Briarwood N.Y. 11435
Tel. (718) 268-9098
Fax (718) 268-9097
www.caliendoarchitects.com

CONSULTANTS:

OWNER:
145 Gates LLC
124-04 Metropolitan Av
Kew Garden, NY

NO.	DATE	REVISION:

SEAL:

DOB:

DRAWING TITLE: SITE PLAN & BLOCK DIAGRAM

PROJECT ADDRESS: 145 GATES AVENUE BROOKLYN, NY

DRAWN BY: BC
CHECKED BY: GJC
JOB NO.: 12212
SCALE: AS NOTED
DATE: 08-07-15

DRAWING No.: 5 OF 19

Z-004.00

GATES AVENUE STREETSCAPE

SCHEMATIC ELEVATION VIEW

GATES AVENUE STREETSCAPE

FRONT FACADE VIEW

THE ARCHITECT SHALL NOT HAVE CONTROL OR CHARGE OF AND SHALL NOT BE RESPONSIBLE FOR CONSTRUCTION MEANS, METHODS, DEVIATIONS, TECHNIQUES, SEQUENCES OR PROCEDURES, OR FOR SAFETY PRECAUTIONS AND PROGRAMS IN CONNECTIONS WITH THE WORK, FOR THE ACTS OR OMISSIONS OF THE CONTRACTOR, SUB-CONTRACTORS OR ANY OTHER PERSONS PERFORMING ANY OF THE WORK, OR FOR THE FAILURE OF THEM TO CARRY OUT THE WORK IN ACCORDANCE WITH THE CONTRACT DOCUMENTS. ALWAYS USE DIMENSIONS AS SHOWN. DRAWINGS ARE NOT TO BE SCALED. GERALD J. CALIENDO ARCHITECT, P.C. AND ITS PRINCIPAL/EMPLOYEES WERE NOT RETAINED FOR ANY CONSTRUCTION SUPERVISION.

Gerald J. Caliendo, R.A., A.I.A.
Architect, P.C.
Architecture
Interior Design
Code Consultant
Building Dept. Expediting
138-72 Queens Boulevard
Briarwood N.Y. 11435
Tel. (718) 268-9098
Fax (718) 268-9097
www.caliendoarchitects.com

CONSULTANTS:

OWNER:
145 Gates LLC
124-04 Metropolitan Av
Kew Garden, NY

DRAWING TITLE: GATES AVENUE STREETSCAPE

PROJECT ADDRESS: 145 GATES AVENUE BROOKLYN, NY

DRAWN BY:	BC
CHECKED BY:	GJC
JOB NO.:	12212
SCALE:	AS NOTED
DATE:	07-20-15

NO.	DATE	REVISION

SEAL:

DOB:

DRAWING No.: 6 OF 19

Z-005.00

GATES AVENUE STREETSCAPE

SCHEMATIC ELEVATION VIEW

GATES AVENUE STREETSCAPE

FRONT FACADE VIEW

THE ARCHITECT SHALL NOT HAVE CONTROL OR CHARGE OF AND SHALL NOT BE RESPONSIBLE FOR CONSTRUCTION MEANS, METHODS, DEVIATIONS, TECHNIQUES, SEQUENCES OR PROCEDURES, OR FOR SAFETY PRECAUTIONS AND PROGRAMS IN CONNECTIONS WITH THE WORK, FOR THE ACTS OR OMISSIONS OF THE CONTRACTOR, SUB-CONTRACTORS OR ANY OTHER PERSONS PERFORMING ANY OF THE WORK, OR FOR THE FAILURE OF THEM TO CARRY OUT THE WORK IN ACCORDANCE WITH THE CONTRACT DOCUMENTS. ALWAYS USE DIMENSIONS AS SHOWN. DRAWINGS ARE NOT TO BE SCALED. GERALD J. CALIENDO ARCHITECT, P.C. AND ITS PRINCIPAL/EMPLOYEES WERE NOT RETAINED FOR ANY CONSTRUCTION SUPERVISION.

Gerald J. Caliendo, R.A., A.I.A.
Architect, P.C.
Architecture
Interior Design
Code Consultant
Building Dept. Expediting
138-72 Queens Boulevard
Briarwood N.Y. 11435
Tel. (718) 268-9098
Fax (718) 268-9097
www.caliendoarchitects.com

CONSULTANTS:

OWNER:
145 Gates LLC
124-04 Metropolitan Av
Kew Garden, NY

DRAWING TITLE: GATES AVENUE STREETSCAPE

PROJECT ADDRESS: 145 GATES AVENUE BROOKLYN, NY

DRAWN BY:	BC
CHECKED BY:	GJC
JOB NO.:	12212
SCALE:	AS NOTED
DATE:	07-20-15

NO.	DATE	REVISION

SEAL:

DOB:

DRAWING No.: 6 OF 19

Z-005.00

FRONT ELEVATION (GATES AVE)

NOTE: ALL LINTELS PROFILES, BROWNSTONE BASE, BRICK BONDS, RAILINGS, AND CORNICES DETAILS WILL CLOSELY MATCH THE HISTORIC PROFILES AND DETAILS AT THE REMAINING HISTORIC ELEMENTS IN THE ROW AS REFERENCE ON ADDRESSES::
139 GATES AVENUE
135 GATES AVENUE
133 GATES AVENUE

THE ARCHITECT SHALL NOT HAVE CONTROL OR CHARGE OF AND SHALL NOT BE RESPONSIBLE FOR CONSTRUCTION MEANS, METHODS, DEVIATIONS, TECHNIQUES, SEQUENCES OR PROCEDURES, OR FOR SAFETY PRECAUTIONS AND PROGRAMS IN CONNECTIONS WITH THE WORK, FOR THE ACTS OR OMISSIONS OF THE CONTRACTOR, SUB-CONTRACTORS OR ANY OTHER PERSONS PERFORMING ANY OF THE WORK, OR FOR THE FAILURE OF THEM TO CARRY OUT THE WORK IN ACCORDANCE WITH THE CONTRACT DOCUMENTS. ALWAYS USE DIMENSIONS AS SHOWN. DRAWINGS ARE NOT TO BE SCALED. GERALD J. CALIENDO ARCHITECT, P.C. AND ITS PRINCIPAL/EMPLOYEES WERE NOT RETAINED FOR ANY CONSTRUCTION SUPERVISION.

Gerald J. Caliendo, R.A., A.I.A.
Architect, P.C.
Architecture
Interior Design
Code Consultant
Building Dept. Expediting
138-72 Queens Boulevard
Briarwood N.Y. 11435
Tel. (718) 268-9098
Fax (718) 268-9097
www.caliendoarchitects.com

CONSULTANTS:

OWNER:
145 GATES LLC
124-04 Metropolitan Av
Queens, NY

DRAWING TITLE: FRONT ELEVATIONS (GATES AV.)

PROJECT ADDRESS: 145 GATES AVENUE BROOKLYN, NY

DRAWN BY: BC	CHECKED BY: GJC	JOB NO.: 12212	SCALE: AS NOTED	DATE: 3-13-15

NO.	DATE	REVISION

SEAL: REGISTERED ARCHITECT GERALD J. CALIENDO 020241 STATE OF NEW YORK

DOB:

DRAWING No.: 8 OF 19

A-001.00

NOTE: ALL LINTELS PROFILES, BROWNSTONE BASE, BRICK BONDS, RAILINGS, AND CORNICES DETAILS WILL CLOSELY MATCH THE HISTORIC PROFILES AND DETAILS AT THE REMAINING HISTORIC ELEMENTS IN THE ROW AS REFERENCE ON ADDRESSES::
139 GATES AVENUE
135 GATES AVENUE
133 GATES AVENUE

THE ARCHITECT SHALL NOT HAVE CONTROL OR CHARGE OF AND SHALL NOT BE RESPONSIBLE FOR CONSTRUCTION MEANS, METHODS, DEVIATIONS, TECHNIQUES, SEQUENCES OR PROCEDURES, OR FOR SAFETY PRECAUTIONS AND PROGRAMS IN CONNECTIONS WITH THE WORK, FOR THE ACTS OR OMISSIONS OF THE CONTRACTOR, SUB-CONTRACTORS OR ANY OTHER PERSONS PERFORMING ANY OF THE WORK, OR FOR THE FAILURE OF THEM TO CARRY OUT THE WORK IN ACCORDANCE WITH THE CONTRACT DOCUMENTS. ALWAYS USE DIMENSIONS AS SHOWN. DRAWINGS ARE NOT TO BE SCALED. GERALD J. CALIENDO ARCHITECT, P.C. AND ITS PRINCIPAL/EMPLOYEES WERE NOT RETAINED FOR ANY CONSTRUCTION SUPERVISION.

Gerald J. Caliendo, R.A., A.I.A.
Architect, P.C.
Architecture
Interior Design
Code Consultant
Building Dept. Expediting
138-72 Queens Boulevard
Briarwood N.Y. 11435
Tel. (718) 268-9098
Fax (718) 268-9097
www.caliendoarchitects.com

CONSULTANTS:

OWNER:
145 GATES LLC
124-04 Metropolitan Av
Queens, NY

DRAWING TITLE: SIDE ELEVATIONS (GRANT AV.)

PROJECT ADDRESS: 145 GATES AVENUE BROOKLYN, NY

DRAWN BY: BC
CHECKED BY: GJC
JOB NO.: 12212
SCALE: AS NOTED
DATE: 3-13-15

NO.	DATE	REVISION

SEAL:

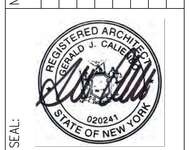

DOB:

DRAWING No.: 9 OF 19

A-002.00

REAR BLDG. ELEVATION C-C
SCALE: 3/16" = 1'-0"

NOTE: ALL LINTELS PROFILES, BROWNSTONE BASE, BRICK BONDS, RAILINGS, AND CORNICES DETAILS WILL CLOSELY MATCH THE HISTORIC PROFILES AND DETAILS AT THE REMAINING HISTORIC ELEMENTS IN THE ROW AS REFERENCE ON ADDRESSES::
139 GATES AVENUE
135 GATES AVENUE
133 GATES AVENUE

THE ARCHITECT SHALL NOT HAVE CONTROL OR CHARGE OF AND SHALL NOT BE RESPONSIBLE FOR CONSTRUCTION MEANS, METHODS, DEVIATIONS, TECHNIQUES, SEQUENCES OR PROCEDURES, OR FOR SAFETY PRECAUTIONS AND PROGRAMS IN CONNECTIONS WITH THE WORK, FOR THE ACTS OR OMISSIONS OF THE CONTRACTOR, SUB-CONTRACTORS OR ANY OTHER PERSONS PERFORMING ANY OF THE WORK, OR FOR THE FAILURE OF THEM TO CARRY OUT THE WORK IN ACCORDANCE WITH THE CONTRACT DOCUMENTS. ALWAYS USE DIMENSIONS AS SHOWN. DRAWINGS ARE NOT TO BE SCALED. GERALD J. CALIENDO ARCHITECT, P.C. AND ITS PRINCIPAL/EMPLOYEES WERE NOT RETAINED FOR ANY CONSTRUCTION SUPERVISION.

Gerald J. Caliendo, R.A., A.I.A.
Architect, P.C.
Architecture
Interior Design
Code Consultant
Building Dept. Expediting
138-72 Queens Boulevard
Briarwood N.Y. 11435
Tel. (718) 268-9098
Fax (718) 268-9097
www.caliendoarchitects.com

CONSULTANTS:

OWNER:
145 GATES LLC
124-04 Metropolitan Av
Queens, NY

DRAWING TITLE: REAR ELEVATIONS

PROJECT ADDRESS: 145 GATES AVENUE BROOKLYN, NY

NO.	DATE	REVISION

DRAWN BY: BC
CHECKED BY: GJC
JOB NO.: 12212
SCALE: AS NOTED
DATE: 3-13-15

SEAL: REGISTERED ARCHITECT GERALD J. CALIENDO 020241 STATE OF NEW YORK

DOB:

DRAWING No.: 9 OF 19

A-003.00

EXISTING RAILINGS ON ADJACENT PROPERTIES

LOCATION OF EXISTING RAILINGS

1. 139 GATES AVENUE
2. 133 GATES AVENUE
3. 135 GATES AVENUE

PROPOSED RAILING

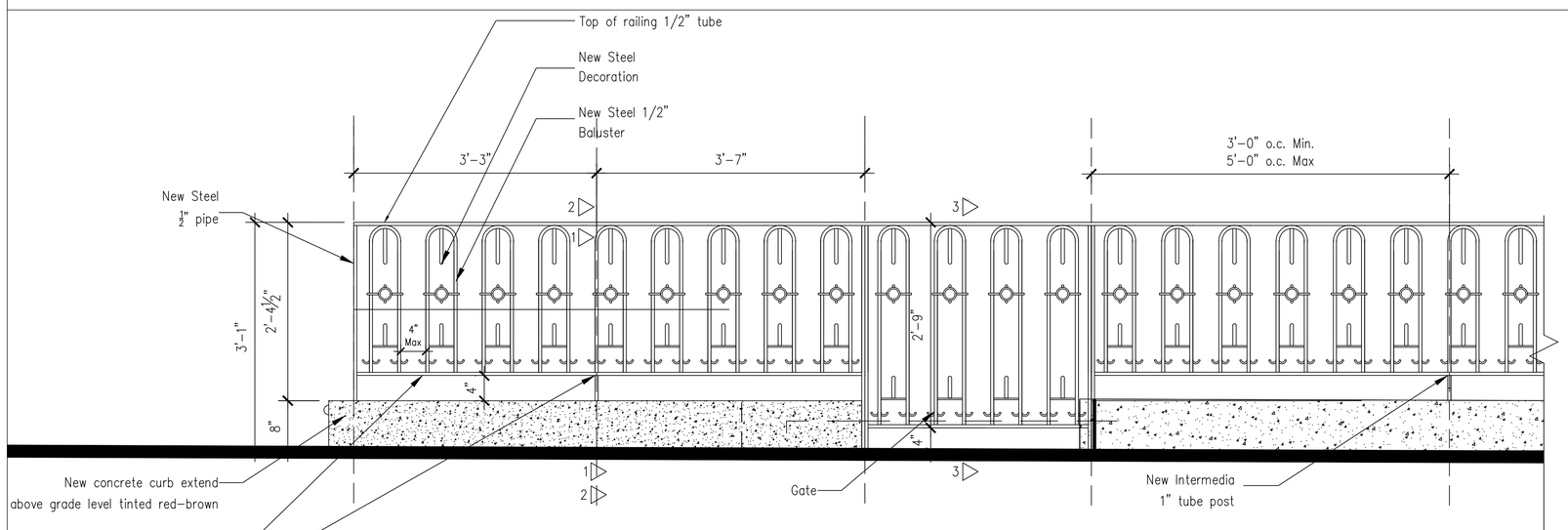

PARTIAL RAILING DETAIL

SCALE: 3/4"=1'-0"

RAILING DESCRIPTION

ALL STEEL PIECES TO BE SHOP WELDED; STEEL RAILING AND HANDRAIL PAINT TO MATCH COLOR FROM ADJACENT PROPERTIES.
COLOR: OPAQUE BLACK

SIMPLE GEOMETRIC LINES RAILING MADE OUT OF STEEL WITH AN ACCENT OF A ROUND POST EVERY 5 FEET OR AS NEEDED IT INCLUDING A SPHERE CAP.
SEE DETAILS ON SHEET A-005

THE ARCHITECT SHALL NOT HAVE CONTROL OR CHARGE OF AND SHALL NOT BE RESPONSIBLE FOR CONSTRUCTION MEANS, METHODS, DEVIATIONS, TECHNIQUES, SEQUENCES OR PROCEDURES, OR FOR SAFETY PRECAUTIONS AND PROGRAMS IN CONNECTIONS WITH THE WORK, FOR THE ACTS OR OMISSIONS OF THE CONTRACTOR, SUB-CONTRACTORS OR ANY OTHER PERSONS PERFORMING ANY OF THE WORK, OR FOR THE FAILURE OF THEM TO CARRY OUT THE WORK IN ACCORDANCE WITH THE CONTRACT DOCUMENTS. ALWAYS USE DIMENSIONS AS SHOWN. DRAWINGS ARE NOT TO BE SCALED. GERALD J. CALIENDO ARCHITECT, P.C. AND ITS PRINCIPAL/EMPLOYEES WERE NOT RETAINED FOR ANY CONSTRUCTION SUPERVISION.

Gerald J. Caliendo, R.A., A.I.A.
Architect, P.C.
Architecture
Interior Design
Code Consultant
Building Dept. Expediting
138-72 Queens Boulevard
Briarwood N.Y. 11435
Tel. (718) 268-9098
Fax (718) 268-9097
www.caliendoarchitects.com

CONSULTANTS:

OWNER:
145 GATES LLC
124-04 Metropolitan Av
Queens, NY

DRAWING TITLE: EXISTING RAILINGS REF. PROPOSED RAILING

PROJECT ADDRESS: 145 GATES AVENUE BROOKLYN, NY

DRAWN BY: BC
CHECKED BY: GJC
JOB NO.: 12212
SCALE: AS NOTED
DATE: 3-13-15

NO.	DATE	REVISION

SEAL: REGISTERED ARCHITECT GERALD J. CALIENDO 020241 STATE OF NEW YORK

DOB:

DRAWING No.: 11 OF 19

A-004.00

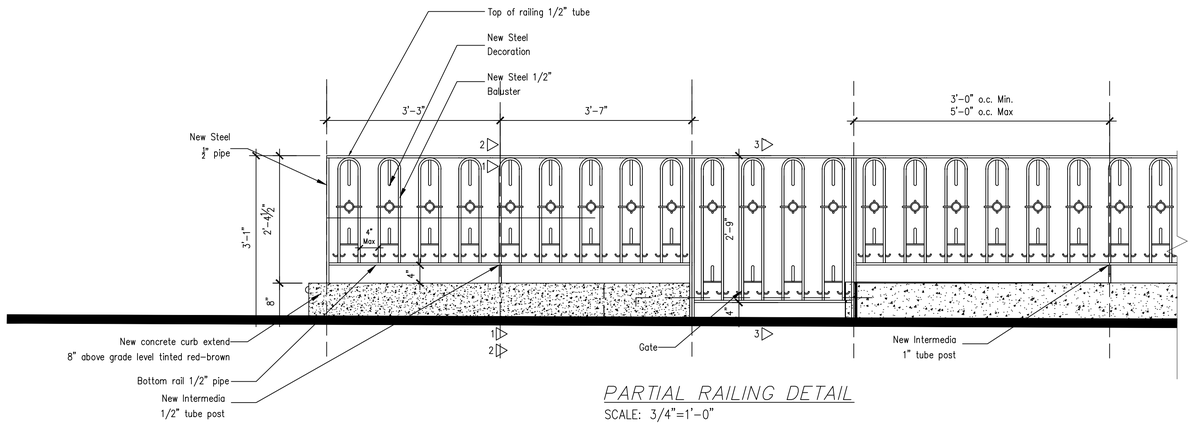

PARTIAL RAILING DETAIL
SCALE: 3/4"=1'-0"

NOTE: ALL RAILINGS AND HANDRAIL WILL BE PAINT OPAQUE BLACK TO MATCH EXISTING FENCES, GATES AND RAILING COLOR THROUGH THE BUILDING

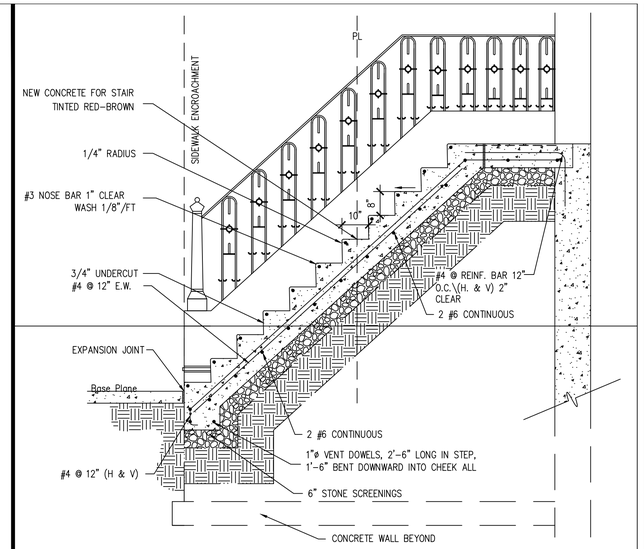

CONCRETE STAIR DETAIL
SCALE: 1/2" = 1'-0"

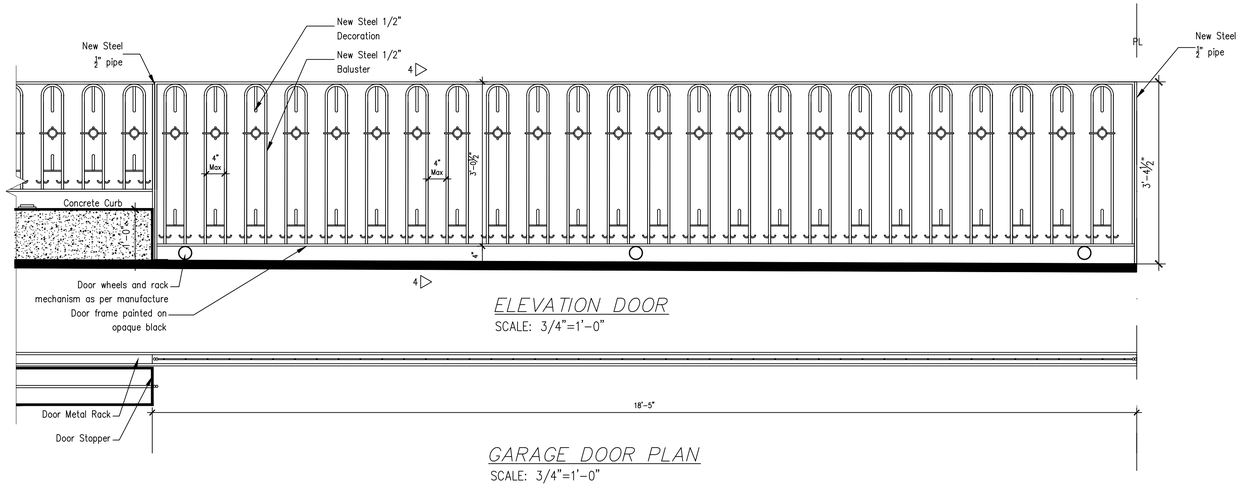

ELEVATION DOOR
SCALE: 3/4"=1'-0"

GARAGE DOOR PLAN
SCALE: 3/4"=1'-0"

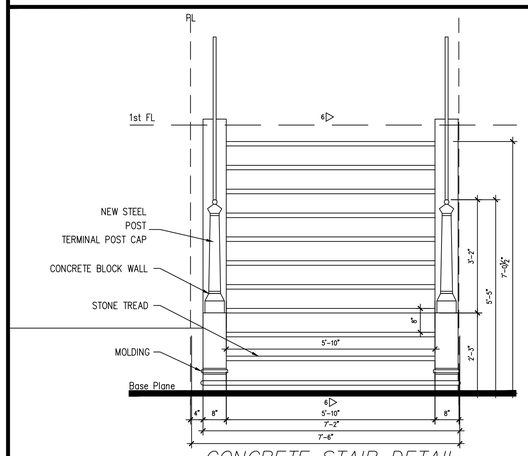

CONCRETE STAIR DETAIL
SCALE: 1/2" = 1'-0"

NOTE:
ALL STEEL PIECES TO BE SHOP WELDED STEEL RAILING AND HANDRAIL PAINTED OPAQUE BLACK

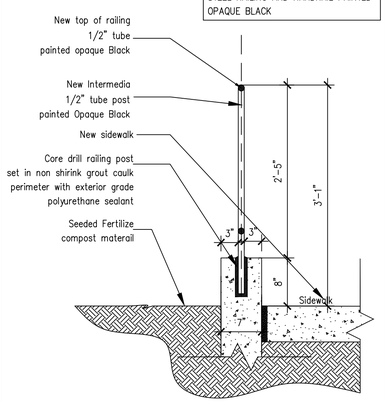

INTERMEDIA POST DETAIL #1
SCALE: 1'=1'-0"

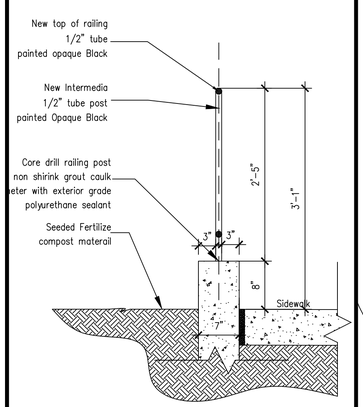

INTERMIDIA POST DETAIL #2
SCALE: 1'=1'-0"

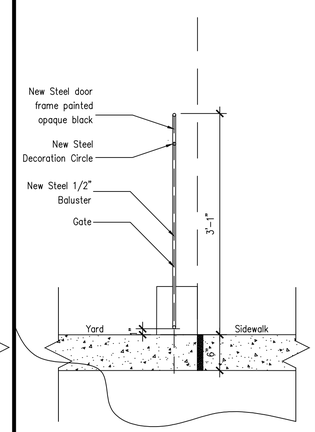

GATE DETAIL #3
SCALE: 1'=1'-0"

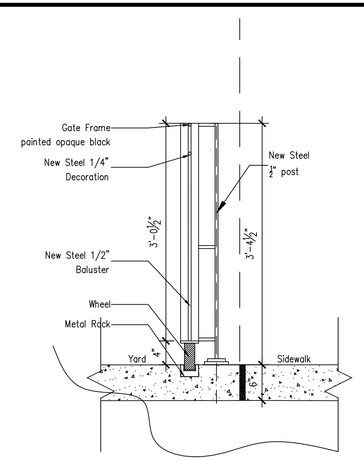

GARAGE GATE DETAIL #4
SCALE: 1'=1'-0"

THE ARCHITECT SHALL NOT HAVE CONTROL OR CHARGE OF AND SHALL NOT BE RESPONSIBLE FOR CONSTRUCTION MEANS, METHODS, DEVIATIONS, TECHNIQUES, SEQUENCES OR PROCEDURES, OR FOR SAFETY PRECAUTIONS AND PROGRAMS IN CONNECTIONS WITH THE WORK, FOR THE ACTS OR OMISSIONS OF THE CONTRACTOR, SUB-CONTRACTORS OR ANY OTHER PERSONS PERFORMING ANY OF THE WORK, OR FOR THE FAILURE OF THEM TO CARRY OUT THE WORK IN ACCORDANCE WITH THE CONTRACT DOCUMENTS. ALWAYS USE DIMENSIONS AS SHOWN, DRAWINGS ARE NOT TO BE SCALED. GERALD J. CALIENDO ARCHITECT, P.C. AND ITS PRINCIPAL/EMPLOYEES WERE NOT RETAINED FOR ANY CONSTRUCTION SUPERVISION.

Gerald J. Caliendo, R.A., A.I.A.
Architect, P.C.
Architecture
Interior Design
Code Consultant
Building Dept. Expediting
138-72 Queens Boulevard
Briarwood N.Y. 11435
Tel. (718) 268-9098
Fax (718) 268-9097
www.caliendoarchitects.com

CONSULTANTS:

OWNER:
145 GATES LLC
124-04 Metropolitan Av
Queens, NY

DRAWING TITLE: PROPOSED RAILING

PROJECT ADDRESS: 145 GATES AVENUE BROOKLYN, NY

DRAWN BY: BC	CHECKED BY: GJC	JOB NO.: 12212	SCALE: AS NOTED	DATE: 3-13-15

NO.	DATE	REVISION

SEAL: REGISTERED ARCHITECT GERALD J. CALIENDO 020241 STATE OF NEW YORK

DOB:

DRAWING No.: 12 OF 19

A-005.00

EXISTING DOUBLE HUNG WINDOW/GRILLED & BRACKET

EXISTING WINDOWS:

WINDOWS DOUBLE HUNG WITH GRILLES OF 3/4"
COLOR: BETWEEN LIGHT BROWN, CREAM AND DARK GRAY.

PROPOSED DOUBLE HUNG WINDOW/GRILLED & BRACKET

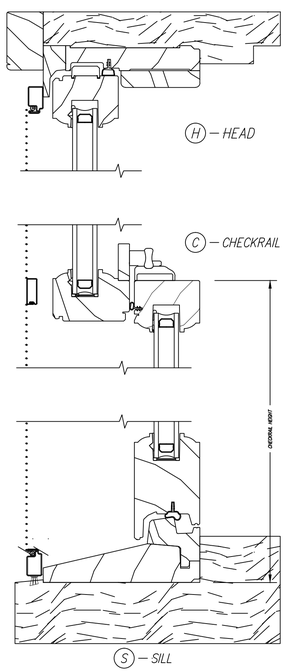

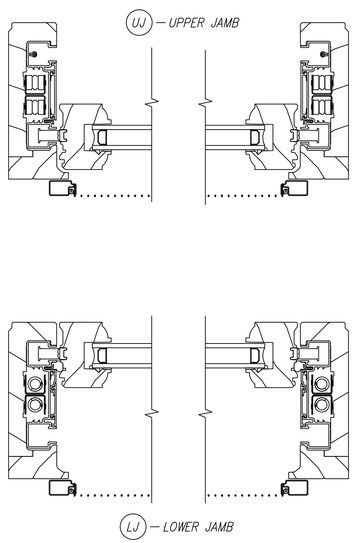

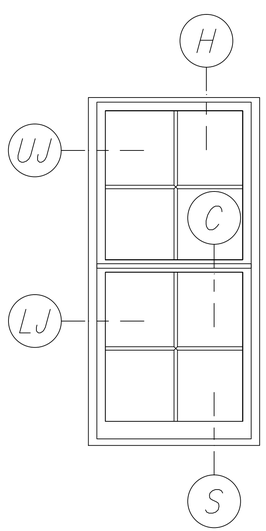

WINDOW ELEVATION

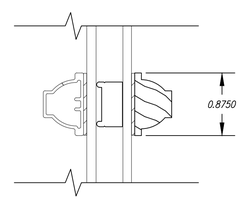

7/8" REGULAR GRILLE

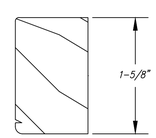

1-7/8" BRICKMOULD

PROPOSED WINDOWS:

ARCHITECT SERIES PELLA.
WOOD EXTERIOR
DOUBLE WITH EXTERIOR TRIM
MONROE BRICKMOULD AND 1" SILL NOSE
HISTORICAL GRILLES OF TWO OVER TWO
COLOR: IRON ORE (DARK GRAY)
ALL SPECIFICATION AS PER MANUFACTURE

THE ARCHITECT SHALL NOT HAVE CONTROL OR CHARGE OF AND SHALL NOT BE RESPONSIBLE FOR CONSTRUCTION MEANS, METHODS, DEVIATIONS, TECHNIQUES, SEQUENCES OR PROCEDURES, OR FOR SAFETY PRECAUTIONS AND PROGRAMS IN CONNECTIONS WITH THE WORK, FOR THE ACTS OR OMISSIONS OF THE CONTRACTOR, SUB-CONTRACTORS OR ANY OTHER PERSONS PERFORMING ANY OF THE WORK, OR FOR THE FAILURE OF THEM TO CARRY OUT THE WORK IN ACCORDANCE WITH THE CONTRACT DOCUMENTS. ALWAYS USE DIMENSIONS AS SHOWN. DRAWINGS ARE NOT TO BE SCALED. GERALD J. CALIENDO ARCHITECT, P.C. AND ITS PRINCIPAL/EMPLOYEES WERE NOT RETAINED FOR ANY CONSTRUCTION SUPERVISION.

Gerald J. Caliendo, R.A., A.I.A.
Architect, P.C.
Architecture
Interior Design
Code Consultant
Building Dept. Expediting
138-72 Queens Boulevard
Briarwood N.Y. 11435
Tel. (718) 268-9098
Fax (718) 268-9097
www.caliendoarchitects.com

CONSULTANTS:

OWNER:
145 GATES LLC
124-04 Metropolitan Av
Queens, NY

DRAWING TITLE:
EXISTING WINDOWS
PROPOSED WINDOWS

PROJECT ADDRESS:
145 GATES AVENUE
BROOKLYN, NY

DRAWN BY: BC	CHECKED BY: GJC	JOB NO.: 12212	SCALE: AS NOTED	DATE: 3-13-15

NO.	DATE	REVISION

SEAL: REGISTERED ARCHITECT GERALD J. CALIENDO 020241 STATE OF NEW YORK

DOB:

DRAWING No.: 13 OF 19

A-006.00

EXISTING DOUBLE DOOR (139 GATE AV.)

EXISTING DOOR:

DOUBLE PANEL GLASS DOORS WITH A TRANSOM WINDOW. COLOR: BETWEEN LIGHT BROWN, DARK BROWN AND DARK GRAY.

PROPOSED WOOD DOOR

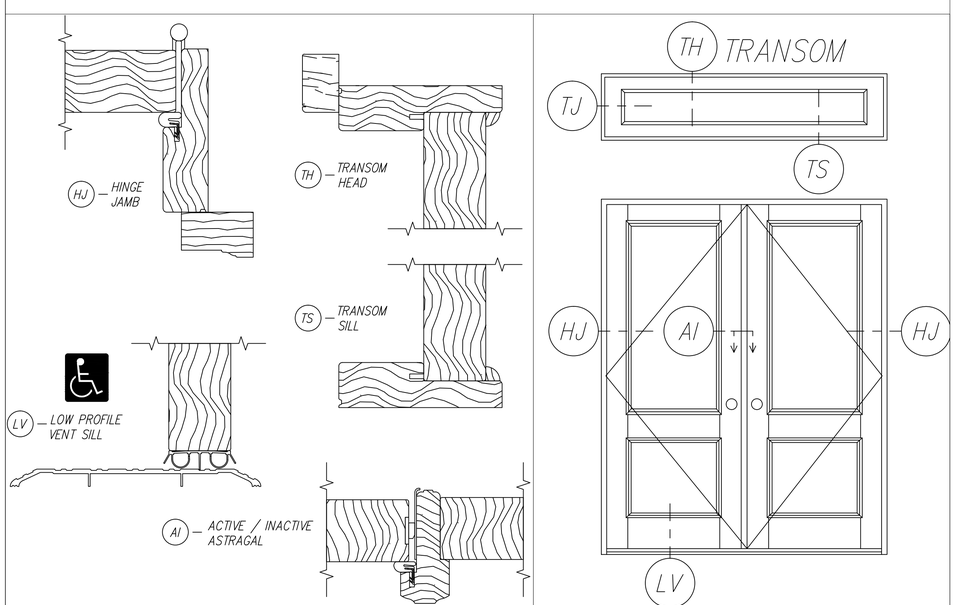

PELLA –DOUBLE PANEL STYLE AND DOOR SIZES WOOD ENTRY DOOR
–WOOD AND ALUMINUM–CLAD WOOD PATIO DOOR
COLOR: IRON ORE (DARK GRAY) ALL SPECIFICATION AS PER MANUFACTUR

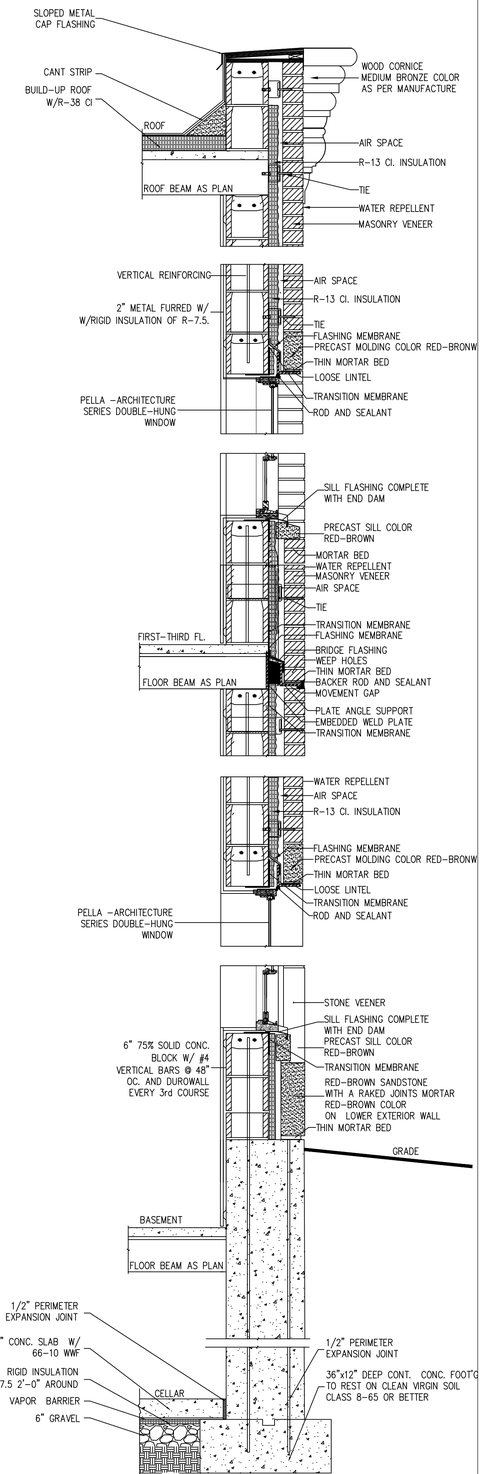

WALL SECTION 1

SCALE: N.T.S

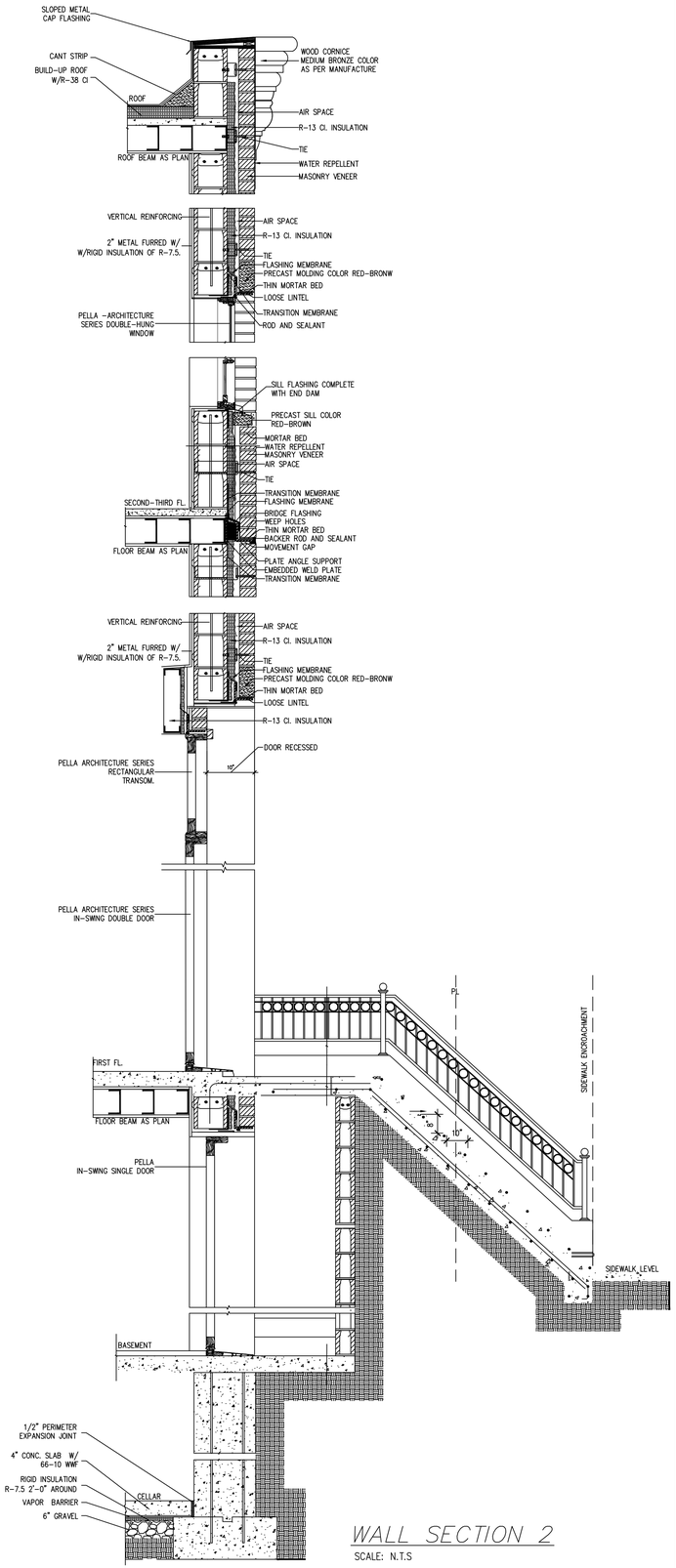

WALL SECTION 2

SCALE: N.T.S

THE ARCHITECT SHALL NOT HAVE CONTROL OR CHARGE OF AND SHALL NOT BE RESPONSIBLE FOR CONSTRUCTION MEANS, METHODS, DEVIATIONS, TECHNIQUES, SEQUENCES OR PROCEDURES, OR FOR SAFETY PRECAUTIONS AND PROGRAMS IN CONNECTIONS WITH THE WORK, FOR THE ACTS OR OMISSIONS OF THE CONTRACTOR, SUB-CONTRACTORS OR ANY OTHER PERSONS PERFORMING ANY OF THE WORK, OR FOR THE FAILURE OF THEM TO CARRY OUT THE WORK IN ACCORDANCE WITH THE CONTRACT DOCUMENTS. ALWAYS USE DIMENSIONS AS SHOWN. DRAWINGS ARE NOT TO BE SCALED. GERALD J. CALIENDO ARCHITECT, P.C. AND ITS PRINCIPAL/EMPLOYEES WERE NOT RETAINED FOR ANY CONSTRUCTION SUPERVISION.

Gerald J. Caliendo, R.A., A.I.A.
Architect, P.C.
Architecture
Interior Design
Code Consultant
Building Dept. Expediting
138-72 Queens Boulevard
Briarwood N.Y. 11435
Tel. (718) 268-9098
Fax (718) 268-9097
www.caliendoarchitects.com

CONSULTANTS:

OWNER:
145 GATES LLC
124–04 Metropolitan Av
Queens, NY

DRAWING TITLE: EXISTING DOORS, PROPOSED DOOR WALL DETAIL #1 & #2

PROJECT ADDRESS: 145 GATES AVENUE BROOKLYN, NY

DRAWN BY: BC
CHECKED BY: GJC
JOB NO.: 12212
SCALE: AS NOTED
DATE: 3–13–15

NO.	DATE	REVISION

SEAL: REGISTERED ARCHITECT GERALD J. CALIENDO 020241 STATE OF NEW YORK

DOB:

DRAWING No.: 14 OF 19

A-007.00

EXISTING SIDEWALK/CURBS CORNER GATES–GRAND AV

EXISTING CONCRETE FENCE CURBS
TINTED LIGHT RED–BROWN STUCCO OVER CONCRETE
PROPOSED: TINTED LIGHT RED–BROWN STUCCO MATCH ADJACENT PROPERTIES ON 139,141 GATES AVENUE (SEE PICTURE BELLOW)

EXISTING SIDEWALK

LIGHT GRAY CONCRETE SIDEWALK WITH STEEL CURB ALL AROUND CORNER LOT

PROPOSED SIDEWALK:

CURING AGENTS SHOULD BE COLORED TO MATCH EXISTING CONCRETE FROM ADJACENT PROPERTIES.
– COLOR MAY VARY DUE TO SLUMPS, CONTENTS AND AGGREGATES
–CONCRETE SHOULD BE UNIFORM IN SLUMP AND LOWEST POSSIBLE
–FOR EXACT COLOR MATCHES, OTHER TINTS AND/OR MIXED TINTS CAN BE TESTED AND USED PENDING APPROVAL OF SAMPLE.
COLOR OF LIGHT TO MEDIUM GRAY GRANITE: DAVIS COLOR # 884
1LB. PER 100 LBS. LIGHT GRAY PORTLAND CEMENT AND SAND

EXISTING BRICK AND STONE 139/133GATES AV.

RED–BROWN STUCCO OVER CONCRETE FOR THE EXTERIOR BASE WITH A SIMILAR MORTAR PIGMENT COLOR

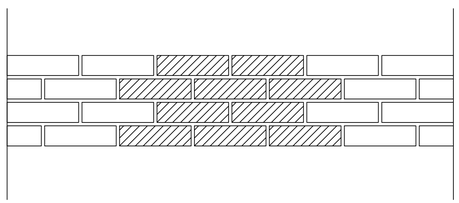

PROPOSED BRICK BOND

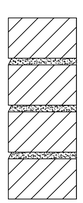

FLAT STRUCK JOINT

–RED–BROWN SANDSTONE FOR THE EXTERIOR BUILDING BASE WITH A RAKED JOINTS MORTAR

–BRICK RED–BROWN WITH FLAT STRUCK JOINT MORTAR COLOR MEDIUM GRAY (SEE SAMPLES)

PROPOSED STRETCHER BOND TO MATCH THE ADJACENT ROW HOUSES BONDS.

THE ARCHITECT SHALL NOT HAVE CONTROL OR CHARGE OF AND SHALL NOT BE RESPONSIBLE FOR CONSTRUCTION MEANS, METHODS, DEVIATIONS, TECHNIQUES, SEQUENCES OR PROCEDURES, OR FOR SAFETY PRECAUTIONS AND PROGRAMS IN CONNECTIONS WITH THE WORK, FOR THE ACTS OR OMISSIONS OF THE CONTRACTOR, SUB– CONTRACTORS OR ANY OTHER PERSONS PERFORMING ANY OF THE WORK, OR FOR THE FAILURE OF THEM TO CARRY OUT THE WORK IN ACCORDANCE WITH THE CONTRACT DOCUMENTS. ALWAYS USE DIMENSIONS AS SHOWN. DRAWINGS ARE NOT TO BE SCALED. GERALD J. CALIENDO ARCHITECT, P.C. AND ITS PRINCIPAL/EMPLOYEES WERE NOT RETAINED FOR ANY CONSTRUCTION SUPERVISION.

Gerald J. Caliendo, R.A., A.I.A.
Architect, P.C.
Architecture
Interior Design
Code Consultant
Building Dept. Expediting
138-72 Queens Boulevard
Briarwood N.Y. 11435
Tel. (718) 268-9098
Fax (718) 268-9097
www.caliendoarchitects.com

CONSULTANTS:

OWNER:
145 GATES LLC
124–04 Metropolitan Av
Queens, NY

DRAWING TITLE:
EXISTING SIDEWALK AND CURBS
PROPOSED SIDEWALK & CURBS

PROJECT ADDRESS:
145 GATES AVENUE
BROOKLYN, NY

NO.	DATE	REVISION

DRAWN BY: BC
CHECKED BY: GJC
JOB NO.: 12212
SCALE: AS NOTED
DATE: 3–13–15

SEAL:
REGISTERED ARCHITECT GERALD J. CALIENDO 020241 STATE OF NEW YORK

DOB:

DRAWING No.: 15 OF 20

A-008.00

EXISTING CORNICE

ORIGINAL WIDE CORNICE WITH BRACKETS PAINTED IN COLORS AS BLACK, DARK GRAY OR DARK BROWN

EXISTING REAR ELEVATION (143/141 GATES AV.)

THE REAR ELEVATIONS
ON HOUSES
143 AND 141 GATES AV.
AND MUST OF THE HOUSES
ALONG THE NORTH SIDE
OF THE BLOCK# 1965
HAVE A REGULAR PATTERNS
OF THREE OVER THREE
LONG NARROW WINDOWS,
EXTERIOR FIRE ESCAPES AND
UPPER FLOOR SET BACK FROM
BASEMENT

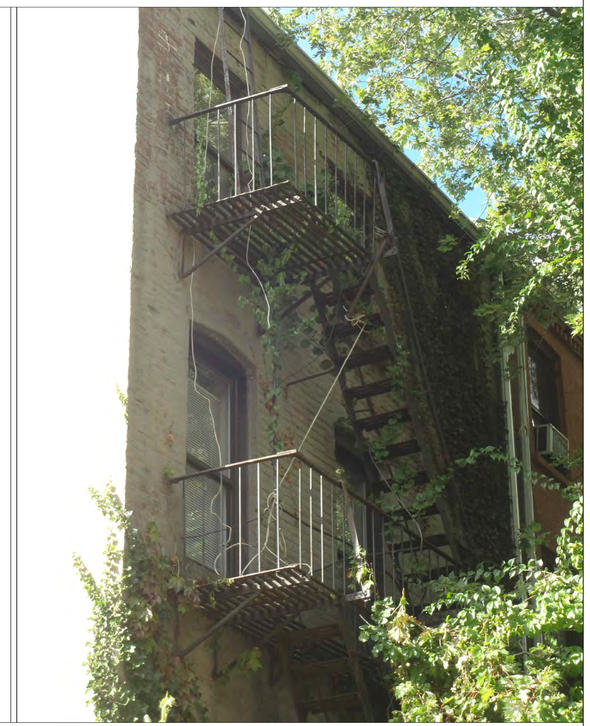

PROPOSED CORNICE

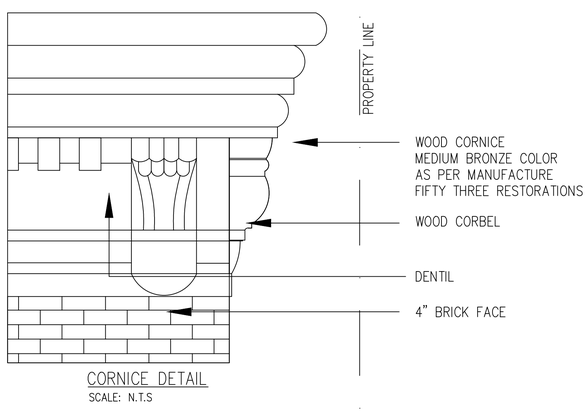

CORNICE DETAIL
SCALE: N.T.S

WIDE CORNICE SYSTEM, CORBELS AND
DENTILS ARE PROVIDE WITH COMPLETE
STRUCTURAL WOOD FRAMEWORK READY
FOR INSTALLATION AS PER MANUFACTURE
TO MATCH THE HISTORIC ELEMENTS FROM
BLDG 135 GATES AV.
COLOR: DARK BRONZE

PROPOSED REAR PARTIAL SUNKEN YARD

PROPOSED REAR FACADE
& OPEN AREA, THREE
OVER THREE NARROW
WINDOWS ON THE UPPER
FLOORS AND A DOUBLE
SWING DOORS IN THE
BASEMENT
TO PROVIDE ACCESS TO
THE REAR YARD AND
SUNKEN OPEN AREA

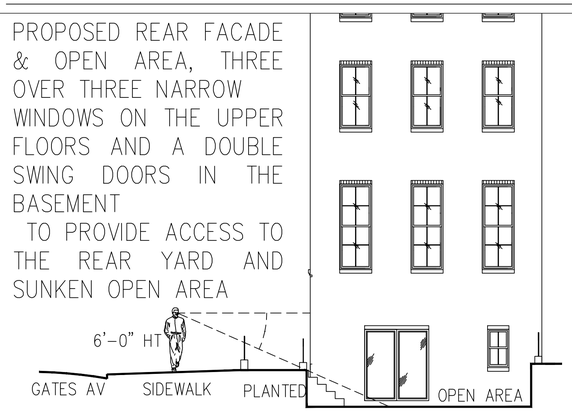

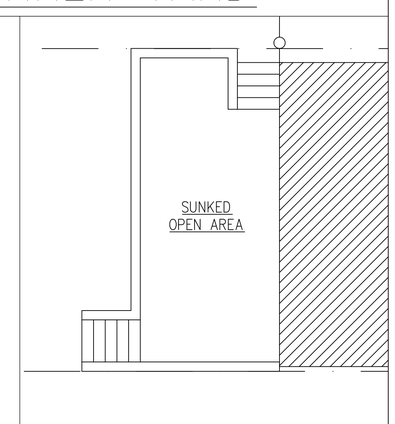

ANGLE OF BUILDING PERCEPTION

ON AN AVERAGE HUMAN HEIGHT OF 6'-0" STANDING UP AT THE WEST SIDE OF GRANT AVENUE SIDEWALK APROX. 12'-0" FROM PROPERTY LINE, THE VISION LINE THAT INTERCEPT BOTTOM OF FENCE CURB,WILL BE PROJECT TO VERIFY THAT IT DOES NOT CREATE A DEEP PERCEPTION OF THE SUNKEN OPEN AREA IN RELATION WITH STREET LEVEL.

ANGLE FOR SIGHT OF BUILDING SET: IS THE ANGLE FORMER BY PROJECTION OF PEDESTRIAN VISION LINE TO AN OBSERVATION POINT.

THE ARCHITECT SHALL NOT HAVE CONTROL OR CHARGE OF AND SHALL NOT BE RESPONSIBLE FOR CONSTRUCTION MEANS, METHODS, DEVIATIONS, TECHNIQUES, SEQUENCES OR PROCEDURES, OR FOR SAFETY PRECAUTIONS AND PROGRAMS IN CONNECTIONS WITH THE WORK, FOR THE ACTS OR OMISSIONS OF THE CONTRACTOR, SUB-CONTRACTORS OR ANY OTHER PERSONS PERFORMING ANY OF THE WORK, OR FOR THE FAILURE OF THEM TO CARRY OUT THE WORK IN ACCORDANCE WITH THE CONTRACT DOCUMENTS. ALWAYS USE DIMENSIONS AS SHOWN. DRAWINGS ARE NOT TO BE SCALED. GERALD J. CALIENDO ARCHITECT, P.C. AND ITS PRINCIPAL/EMPLOYEES WERE NOT RETAINED FOR ANY CONSTRUCTION SUPERVISION.

Gerald J. Caliendo, R.A., A.I.A.
Architect, P.C.
Architecture
Interior Design
Code Consultant
Building Dept. Expediting
138-72 Queens Boulevard
Briarwood N.Y. 11435
Tel. (718) 268-9098
Fax (718) 268-9097
www.caliendoarchitects.com

CONSULTANTS:

OWNER:
145 GATES LLC
124-04 Metropolitan Av
Queens, NY

DRAWING TITLE: EXISTING & PROPOSED CORNICE REAR YARD & FACADE DESCRIPTION

PROJECT ADDRESS: 145 GATES AVENUE BROOKLYN, NY

DRAWN BY: BC
CHECKED BY: GJC
JOB NO.: 12212
SCALE: AS NOTED
DATE: 3-13-15

NO.	DATE	REVISION

SEAL: REGISTERED ARCHITECT GERALD J. CALIENDO 020241 STATE OF NEW YORK

DOB:

DRAWING No.: 16 OF 19

A-009.00

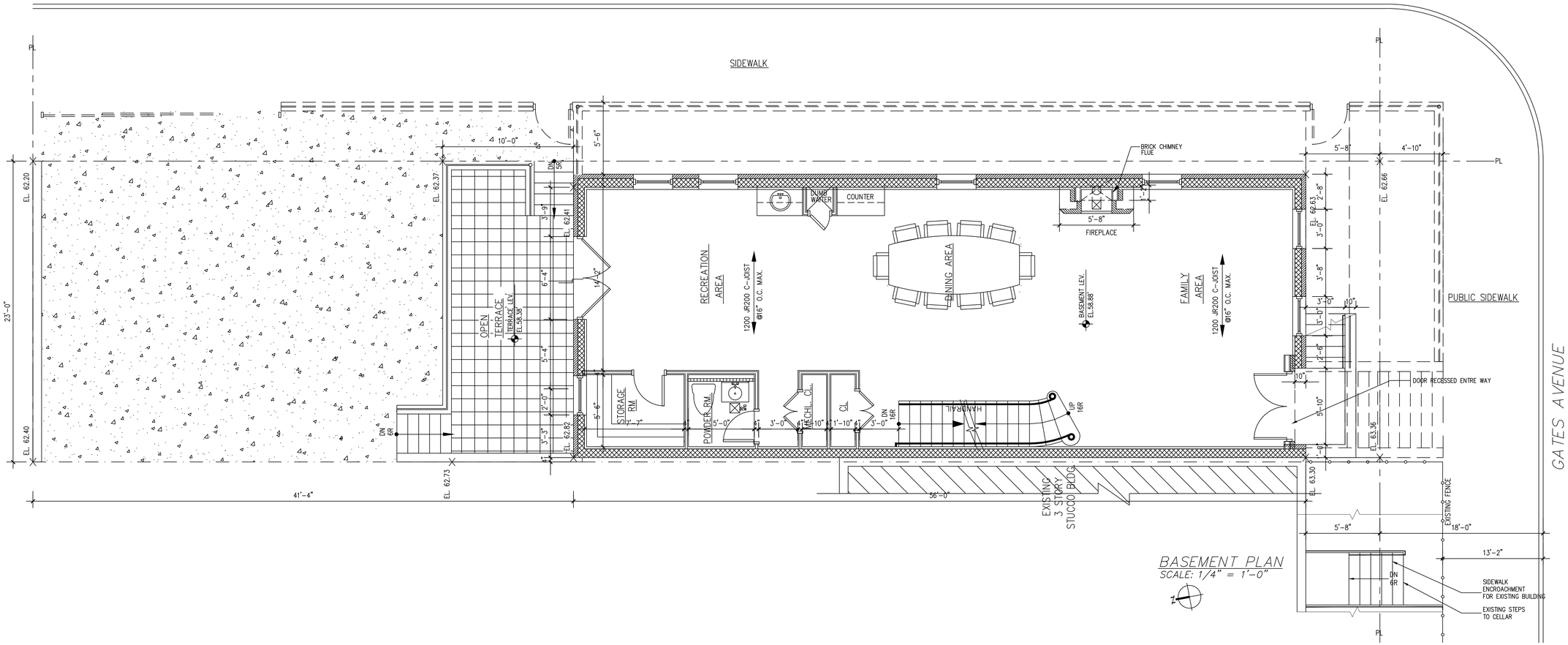

BASEMENT PLAN
SCALE: 1/4" = 1'-0"

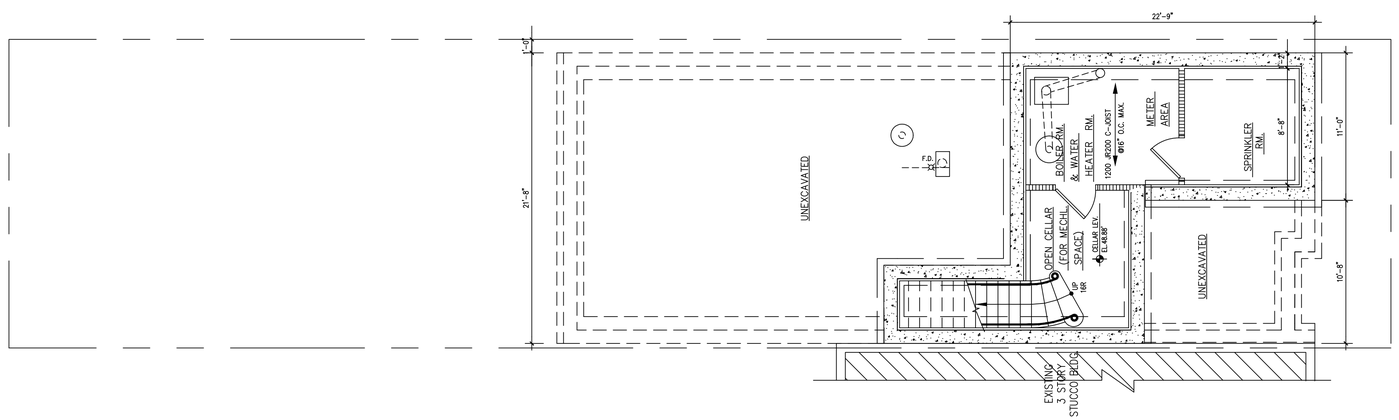

CELLAR PLAN
SCALE: 1/4" = 1'-0"

THE ARCHITECT SHALL NOT HAVE CONTROL OR CHARGE OF AND SHALL NOT BE RESPONSIBLE FOR CONSTRUCTION MEANS, METHODS, DEVIATIONS, TECHNIQUES, SEQUENCES OR PROCEDURES, OR FOR SAFETY PRECAUTIONS AND PROGRAMS IN CONNECTIONS WITH THE WORK, FOR THE ACTS OR OMISSIONS OF THE CONTRACTOR, SUB- CONTRACTORS OR ANY OTHER PERSONS PERFORMING ANY OF THE WORK, OR FOR THE FAILURE OF THEM TO CARRY OUT THE WORK IN ACCORDANCE WITH THE CONTRACT DOCUMENTS. ALWAYS USE DIMENSIONS AS SHOWN, DRAWINGS ARE NOT TO BE SCALED. GERALD J. CALIENDO ARCHITECT, P.C. AND ITS PRINCIPAL/EMPLOYEES WERE NOT RETAINED FOR ANY CONSTRUCTION SUPERVISION.

Gerald J. Caliendo, R.A., A.I.A.
Architect, P.C.

Architecture
Interior Design
Code Consultant
Building Dept. Expediting

138-72 Queens Boulevard
Briarwood N.Y. 11435

Tel. (718) 268-9098
Fax (718) 268-9097
www.caliendoarchitects.com

CONSULTANTS:

OWNER:
145 GATES LLC
124-04 METROPOLITAN A
KEW GARDENS, NY

DRAWING TITLE:
BASEMENT FLOOR PLAN
CELLAR FLOOR PLANS

PROJECT ADDRESS:
145 GATES AVENUE
Brooklyn, New York

DRAWN BY: FM	CHECKED BY: GJC	JOB NO.: 12212	SCALE: AS NOTED	DATE: 3-13-15

NO.	DATE	REVISION

SEAL:

REGISTERED ARCHITECT GERALD J. CALIENDO 020241 STATE OF NEW YORK

DOB:

DRAWING No.: 17 OF 19

A-010.00

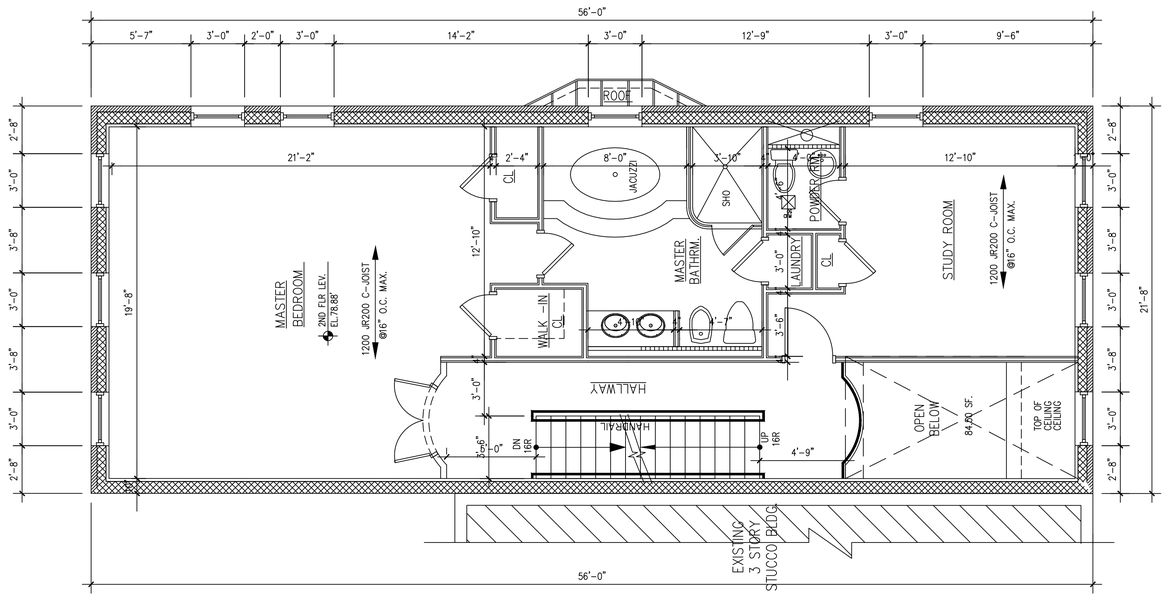

2ND FLR. PLAN
SCALE: 1/4" = 1'-0"

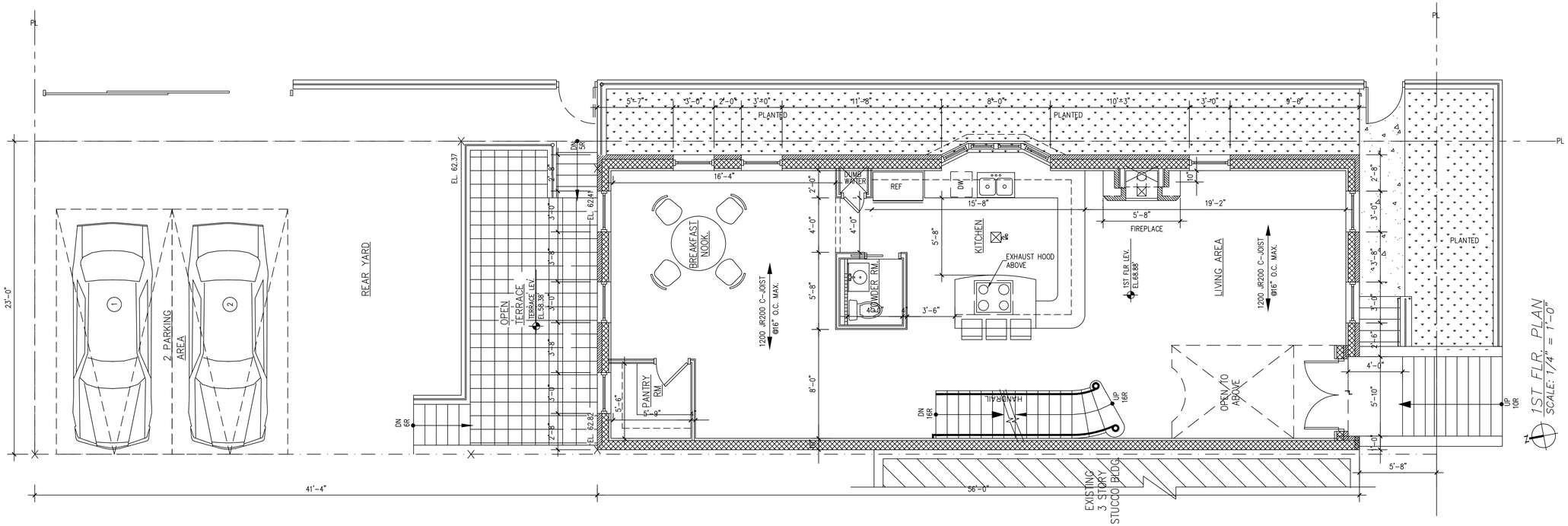

1ST FLR. PLAN
SCALE: 1/4" = 1'-0"

THE ARCHITECT SHALL NOT HAVE CONTROL OR CHARGE OF AND SHALL NOT BE RESPONSIBLE FOR CONSTRUCTION MEANS, METHODS, DEVIATIONS, TECHNIQUES, SEQUENCES OR PROCEDURES, OR FOR SAFETY PRECAUTIONS AND PROGRAMS IN CONNECTIONS WITH THE WORK, FOR THE ACTS OR OMISSIONS OF THE CONTRACTOR, SUB-CONTRACTORS OR ANY OTHER PERSONS PERFORMING ANY OF THE WORK, OR FOR THE FAILURE OF THEM TO CARRY OUT THE WORK IN ACCORDANCE WITH THE CONTRACT DOCUMENTS. ALWAYS USE DIMENSIONS AS SHOWN. DRAWINGS ARE NOT TO BE SCALED. GERALD J. CALIENDO ARCHITECT, P.C. AND ITS PRINCIPAL/EMPLOYEES WERE NOT RETAINED FOR ANY CONSTRUCTION SUPERVISION.

Gerald J. Caliendo, R.A., A.I.A.
Architect, P.C.

Architecture
Interior Design
Code Consultant
Building Dept. Expediting

138-72 Queens Boulevard
Briarwood N.Y. 11435

Tel. (718) 268-9098
Fax (718) 268-9097
www.caliendoarchitects.com

CONSULTANTS:

OWNER:
145 GATES LLC
124-04 METROPOLITAN AVE
KEW GARDENS, NY

DRAWING TITLE:
SECOND FLOOR PLAN
FIRST FLOOR PLANS

PROJECT ADDRESS:
145 GATES AVENUE
Brooklyn, New York

DRAWN BY: FM	CHECKED BY: GJC	JOB NO.: 12212	SCALE: AS NOTED	DATE: 3-13-15

NO.	DATE	REVISION

SEAL:

REGISTERED ARCHITECT GERALD J. CALIENDO 020241 STATE OF NEW YORK

DOB:

DRAWING No.: 18 OF 19

A-011.00

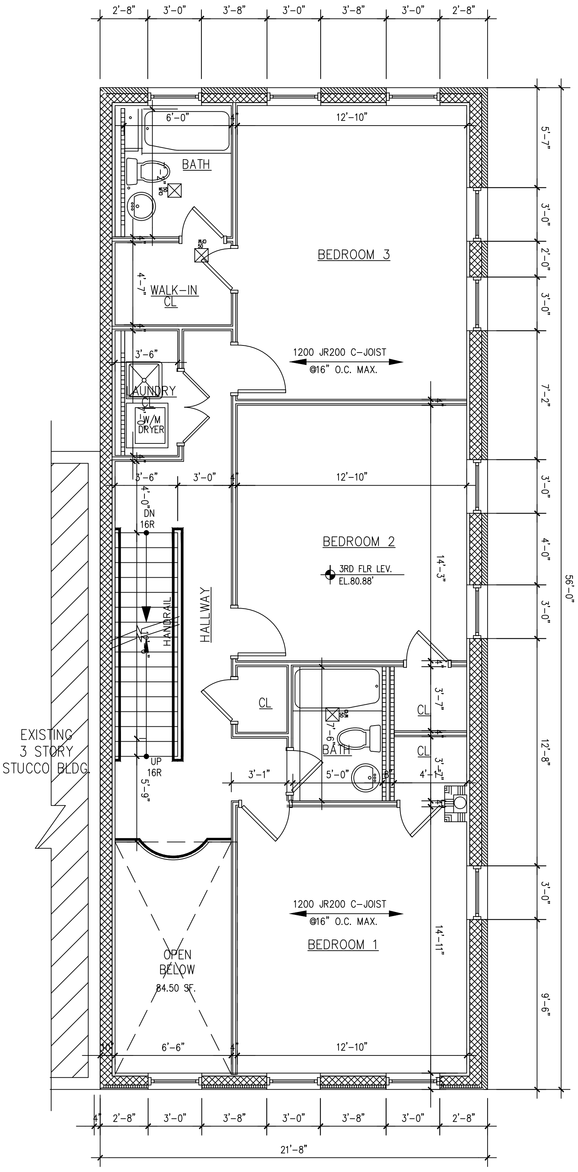

3RD FLR. PLAN
SCALE: 1/4" = 1'-0"

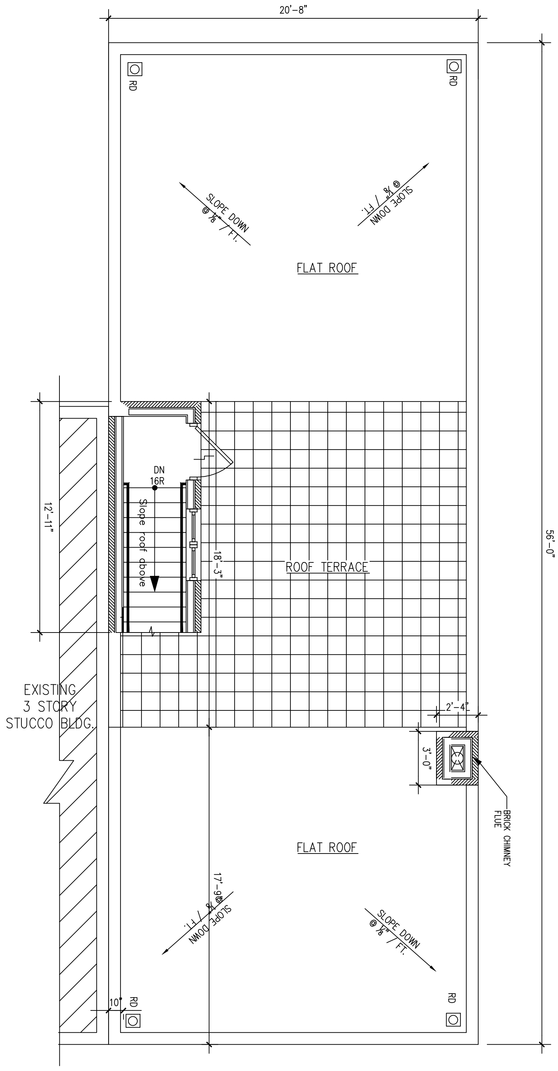

ROOF PLAN
SCALE: 1/4" = 1'-0"

THE ARCHITECT SHALL NOT HAVE CONTROL OR CHARGE OF AND SHALL NOT BE RESPONSIBLE FOR CONSTRUCTION MEANS, METHODS, DEVIATIONS, TECHNIQUES, SEQUENCES OR PROCEDURES, OR FOR SAFETY PRECAUTIONS AND PROGRAMS IN CONNECTIONS WITH THE WORK, FOR THE ACTS OR OMISSIONS OF THE CONTRACTOR, SUB- CONTRACTORS OR ANY OTHER PERSONS PERFORMING ANY OF THE WORK, OR FOR THE FAILURE OF THEM TO CARRY OUT THE WORK IN ACCORDANCE WITH THE CONTRACT DOCUMENTS. ALWAYS USE DIMENSIONS AS SHOWN. DRAWINGS ARE NOT TO BE SCALED. GERALD J. CALIENDO ARCHITECT, P.C. AND ITS PRINCIPAL/EMPLOYEES WERE NOT RETAINED FOR ANY CONSTRUCTION SUPERVISION.

A-012.00

DRAWING No.: 19 OF 19

DOB:

SEAL: REGISTERED ARCHITECT GERALD J. CALIENDO 020261 STATE OF NEW YORK

NO.	DATE	REVISION

DRAWN BY: FM
CHECKED BY: GJC
JOB NO.: 12212
SCALE: AS NOTED
DATE: 3-13-15

DRAWING TITLE:
ROOF PLAN
THIRD FLOOR PLANS

PROJECT ADDRESS:
145 GATES AVENUE
Brooklyn, New York

OWNER:
145 GATES LLC
124-04 METROPOLITAN AVE
KEW GARDENS, NY

CONSULTANTS:

Gerald J. Caliendo, R.A., A.I.A.
Architect, P.C.
13&72 Queens Boulevard
Bellerwood N.Y. 11435
Tel. (718) 268-0098
Fax (718) 268-0097
www.caliendoarchitects.com

Architecture
Interior Design
Code Consultant
Building Dept.
Expediting