DEMOLITION NOTES

1. CONTRACTOR SHALL PERFORM ALL OPERATIONS OF DEMOLITION AND REMOVAL INDICATED ON THE DRAWINGS AND AS MAY BE REQUIRED BY THE WORK. ALL WORK SHALL BE DONE CAREFULLY AND NEATLY, IN A SYSTEMATIC MANNER.

2. ALL EXISTING SURFACES AND EQUIPMENT TO REMAIN SHALL BE FULLY PROTECTED FROM DAMAGE. THE CONTRACTOR SHALL ASSUME FULL RESPONSIBILITY FOR DAMAGE AND SHALL MAKE REPAIRS REQUIRED WITHOUT ADDITIONAL COST TO THE OWNER.

3. NO DEBRIS SHALL BE ALLOWED TO ACCUMULATE ON THE SITE. DEBRIS SHALL BE REMOVED BY THE CONTRACTOR AS THE JOB PROCEEDS. THE SITE SHALL BE LEFT BROOM CLEAN AT THE COMPLETION OF DEMOLITION.

4. NO STRUCTURAL ELEMENTS SHALL BE REMOVED UNLESS PORTIONS AFFECTED ARE ADEQUATELY SUPPORTED BY EITHER TEMPORARY SHORING OR NEW STRUCTURAL ELEMENTS AS REQUIRED TO PROTECT THE STABILITY AND INTEGRITY OF THE EXISTING STRUCTURE.

5. ALL ADJOINING PROPERTY AFFECTED BY ANY OPERATIONS OF DEMOLITION SHALL BE PROTECTED AS PER THE REQUIREMENTS OF ARTICLE 19 OF THE NEW YORK CITY BUILDING CODE.

6. REMOVE AND RELOCATE ALL WIRING, PLUMBING AND MECHANICAL EQUIPMENT AFFECTED BY REMOVAL OF PARTITIONS. REMOVED PIPES AND/OR LINES SHALL BE CUT TO A POINT OF CONCEALMENT BEHIND OR BELOW FINISH SURFACES, AND SHALL BE PROPERLY CAPPED OR PLUGGED.

7. THE CONTRACTOR SHALL PROVIDE, ERECT AND MAINTAIN ALL TEMPORARY BARRIER AND GUARDS, AND ALL TEMPORARY SHORING AND BRACING AS REQUIRED BY DEPARTMENT OF BUILDING RULES AND REGULATIONS.

8. THE CONTRACTOR SHALL PROVIDE ADEQUATE WEATHER PROTECTION FOR THE BUILDING AND ITS CONTENTS DURING THE COURSE OF THE WORK. ALL OPENINGS IN ANY WALL OR ROOF SHALL BE PROTECTED FROM ALL FORMS OF WEATHER OR WATER PENETRATION.

9. DEMOLITION WORK SHALL BE CARRIED OUT ACCORDING TO THE RULES OF THE BUILDING DEPARTMENT AND NOT WITHOUT TIMELY NOTIFICATION TO THE BUILDING FEPARTMENT OR ITS SCOPE. GENERAL CONTRACTOR IS TO SURVEY EXTENT OF DEMOLITION WITH AN AUTHORIZED REPRESENTATIVE OF THE BUILDING DEPARTMENT AND ADVISE ARCHITECT IMMEDIATELY OF ANY CIRCUMSTANCES THAT MIGHT INTERFERE WITH THE JOB'S PROGRESS.

TENANTS' SAFETY NOTES

1. CONSTRUCTION OPERATIONS WILL NOT BLOCK HALLWAYS OR MEANS OF EGRESS FOR TENANTS OF THE BUILDING.

2. CONSTRUCTION OPERATIONS WILL NOT INVOLVE INTERRUPTION OF HEATING, WATER OR ELECTRICAL SERVICES TO THE TENANTS OF THE BUILDING.

3. CONSTRUCTION OPERATIONS WILL BE CONFINED TO NORMAL WORKING HOURS (8 A.M. TO 5 P.M., MONDAYS THROUGH FRIDAYS EXCEPT LEGAL HOLIDAYS FALLING WITHIN THE ABOVE-STATED PERIODM WHEREIN WORK WILL NOT BE DONE).

CONSTRUCTION AND DEMOLITION NOTES

1. THE CONTRACTOR SHALL EXAMINE ALL AREAS IN WHICH HIS WORK IS TO BE INSTALLED, AND SHALL REPORT ANY UNSUITABLE CONDITIONS. THE CONTRACTOR WILL BE HELD RESPONSIBLE FOR THE CONDITION OF THE FINISHED WORK, AND NO CLAIM AS TO DEFECTS IN THE UNDERLYING WORK WILL BE CONSIDERED AFTER THE WORK UNDER THIS CONTRACT IS STARTED.

2. THE CONTRACTOR, BEFORE STARTING AND WORK, SHALL VERIFY ALL DIMENSIONS AND LEVELS GIVEN FOR WORK UNDER THIS CONTRACT, IN CONJUNCTION WITH ARCHITECT'S DRAWINGS AND DETAILS.

3. SUBMIT TO ARCHITECT FOR REVIEW PRIOR TO FABRICATION OR PURCHASE, FULLY DIMENSIONED SHOP DRAWINGS BEFORE BEGINNING CONSTRUCTION.

4. DEMOLITION SHALL BE CARRIED OUT ACCORDING TO THE RULES OF THE BUILDING DEPARTMENT AND NOT WITHOUT TIMELY NOTIFICATION TO THE BUILDING DEPARTMENT OR ITS SCOPE. GENERAL CONTRACTOR IS TO SURVEY EXTENT OF DEMOLITION WITH AN AUTHORIZED REPRESENTATIVE F THE BUILDING DEPARTMENT AND ADVISE ARCHITECT OF IMMEDIATELY OF ANY CIRCUMSTANCES THAT MIGHT INTERFERE WITH THE JOB'S PROGRESS.

5. GENERAL CONTRACTOR IS TO FLASH-PATCH ALL UNEVEN FLOOR CONDITIONS. FILL DEPRESSIONS, PROVIDE NEW FLOOR WHERE REQUIRED, REMOVE PROJECTIONS, ELECTRICAL CAPS OR MOLDS, STUBBED PIPE, ETC., TO PROVIDE AN EVEN FLOOR IN TIME FOR FLOORING INSTALLATION AS SCHEDULED. FLOOR ACCESS PLATES MUST BE SET FLUSH WITH CEMENT OR FRAMED FLOOR.

6. VERIFY THAT ALL MECHANICAL FACILITIES ARE IN GOOD WORKING CONDITIONS, AND FREE OF LEAKS (DURING AND AFTER COMPLETION OF WORK). CUT BACK UNUSED PLUMBING AND CONCEAL

7. LOCATION OF REQUIRED ACCESS PANELS IF ANY, MUST BE SHOWN TO AND APPROVED BY JOSEPH PELL LOMBARDI & ASSOCIATES, ARCHITECTS.

8. ALL NEW STUD PARTITIONS TO RUN SLAB-TO-SLAB WALL CORNERS AND DOOR OPENINGS. 5/8" TYPE "X" SHEETROCK AS DETAILED. ALL FIRE-RATED PARTITIONS MUST CONFORM TO THE 1987 UNIFORM BUILDING CODE AS MODIFIED BY THE CITY OF NEW YORK.

9. CONSULT STRUCTURAL, MECHANICAL, AND ALL OTHER DRAWINGS AND SPECIFICATIONS RELATED TO WORK HEREIN SHOWN BEFORE CONSTRUCTION BEGINS. EXISTING MASONRY WALLS TO BE RESTORED TO STRUCTURAL INTEGRITY AS REQUIRED. EXISTING BRICK WALL WHERE EXPOSED TO BE CLEANED IN ACCEPTABLE MANNER, AND PREPARED FOR SCALING. BRICK TO BE SEALED WITH 2 COATS SHELLAC MIXTURE (1:1 PER GALLON CLEAR SHELLAC/ALCOHOL) AND FINAL COAT TO SATIN-FINISH POLYURETHANE. APPLY POLYURETHANE AFTER 1 DAY DRYING OF SHELLAC. A FINISHED SAMPLE ON SITE TO BE PREPARED FOR APPROVAL OF JOSEPH PELL LOMBARDI & ASSOCIATED, ARCHITECTS, BEFORE WORK BEGINS.

ENERGY CHART

WORK ITEMS INCLUDING NEW AND/OR REPLACEMENT	PROPOSED DESIGNED VALUES	CODE PRESCRIBED VALUE 7 CITATION
ENVELOPES, WINDOWS DOORS, STORE FRONT, BASEMENT	N/A	
INTERIOR PARTITIONS BETWEEN CONDITIONED CORRIDOR AND CONDITIONED APARTMENT	N/A	
PIPING INSULATIONS	N/A	
INTERIOR LIGHTING	N/A	
EXTERIOR LIGHTING	N/A	
BOILERS/HEATING FURNACES	N/A	
HVAC SYSTEMS	N/A	
OTHER NOTE	N/A	

PROFESSIONAL AFFIDAVIT:

TO THE BEST OF MY KNOWLEDGE, BELIEF, AND PROFESSIONAL JUDGEMENT, HIS APPLICATION, IS IN COMPLIANCE WITH THE ECCCNYS 2010. THE SCOPE OF WORK DOES NOT AFFECT THE ENERGY USE OF THE BUILDING.

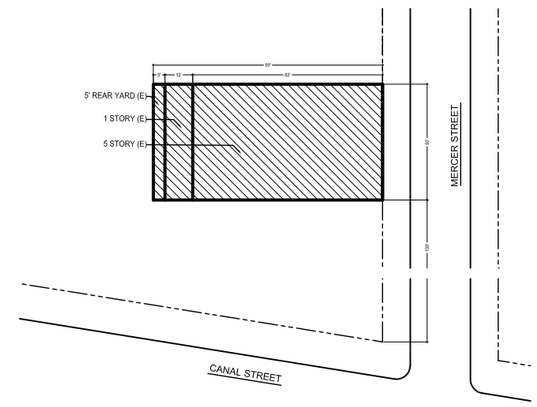

PLOT PLAN
NOT TO SCALE

BLOCK NO. : 230
LOT NO. : 42
ZONING DISTRICT : M1-5B
ZONING MAP NO. : 12a

INDEX OF DRAWINGS

A-001 PLOT PLAN, NOTES, DRAWING INDEX
A-100 PHOTOS, EXISTING & PROPOSED FIRST FLOOR PLANS
A-200 EXISTING & PROPOSED ELEVATIONS
A-800 STOREFRONT DETAILS

NOTES

THE INTENTION OF THE APPLICATION IS TO REMOVE THE OUTSTANDING VIOLATION FOR STOREFRONT WORK DONE WITHOUT A PERMIT. THIS APPLICATION RESTORES THE ORIGINAL NINETEENTH CENTURY CHARACTER OF THE STOREFRONT.

SCOPE OF WORK

1. NEW BULKHEADS AT STOREFRONT BAYS 1 & 2
2. REPLACEMENT OF DOORS AT STOREFRONT BAYS 3 & 5
3. REPLACEMENT OF SERVICE DOORS AT STOREFRONT BAY 6

WORK APPLICATIONS

1. CHANGE OF USE, EGRESS & OCCUPANCY
   ALT I #110042347
2. DEMO ALT II
   # 104797178
3. PLUMBING/MECHANICAL
   ALT II #
4. SPRINKLER MODIFICATION
   ALT II #

OTHER CITY AGENCIES

1. LANDMARKS APPROVAL

REQUIRED ITEMS

1. FINAL INSPECTION AS PER DIR 14

THE
OFFICE OF
JOSEPH PELL LOMBARDI
& ASSOCIATES
ARCHITECTS
412 BROADWAY
NEW YORK, N.Y. 10013
(212) 349-0700

STRUCTURAL ENGINEER:

MECHANICAL ENGINEER:

5-7 MERCER STREET
NEW YORK, NY

REV. DATE

5-7 MERCER STREET
NEW YORK, NY

DWG. TITLE

PLOT PLAN, NOTES, DRAWING INDEX

SEAL & SIGNATURE

ISSUE DATE 01.16.2015
SCALE N.T.S.
JOB NO. 0706.00

DRAWING REFERENCE NO.

A-001.00

1 OF 4

D.O.B. IDENTIFICATION NUMBER

PRESENT DAY PHOTO FROM MERCER STREET AND HOWARD STREET

HISTORIC PHOTO FROM MERCER STREET AND HOWARD STREET

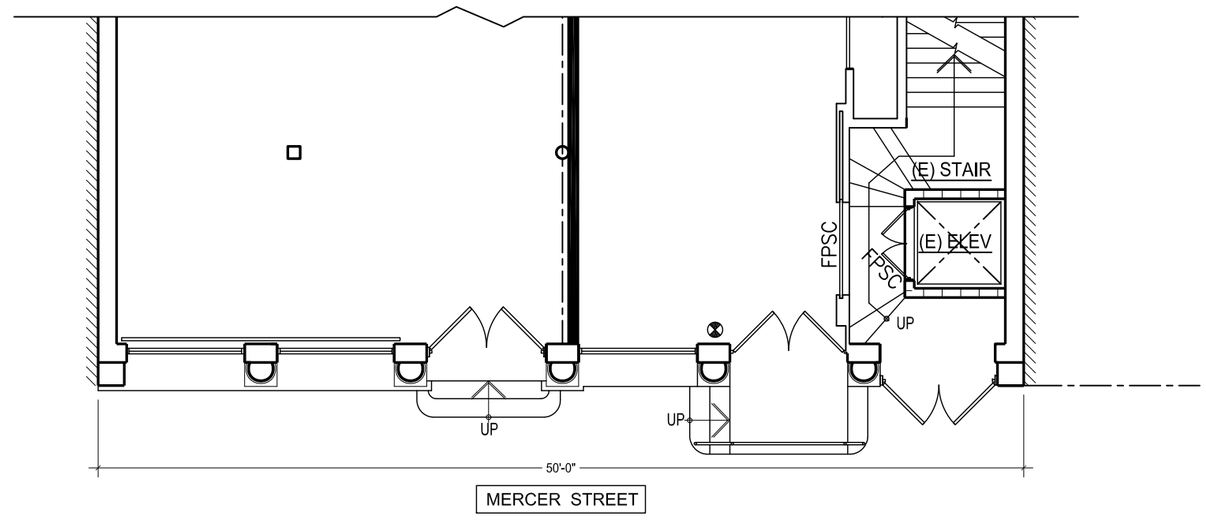

1 EXISTING FIRST FLOOR PLAN
SCALE: 3/8"=1'-0"

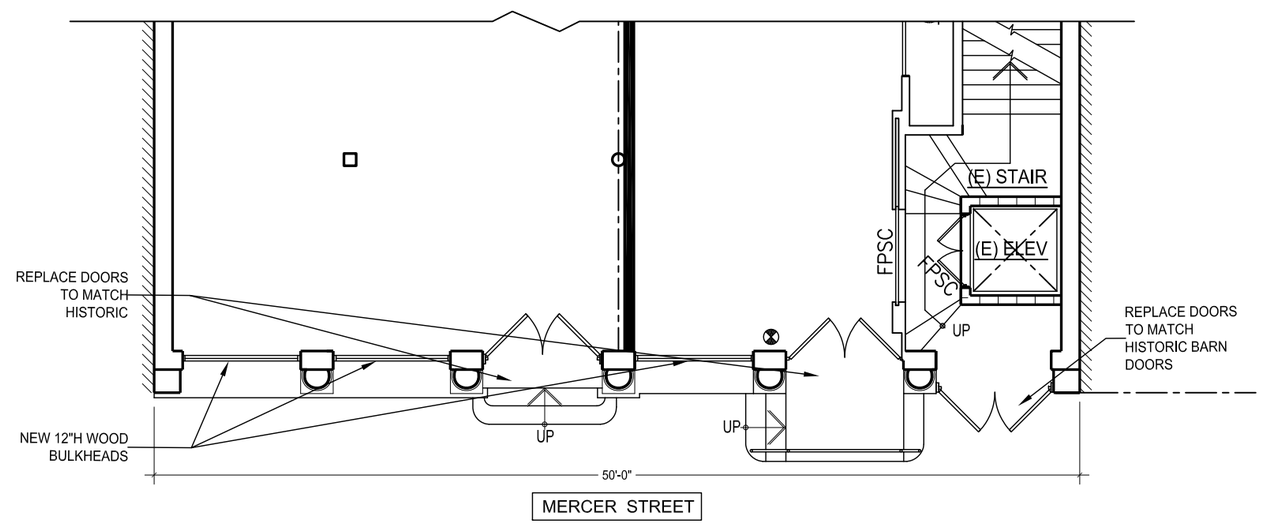

2 PROPOSED FIRST FLOOR PLAN
SCALE: 3/8"=1'-0"

THE
OFFICE OF
JOSEPH PELL LOMBARDI
& ASSOCIATES
ARCHITECTS
412 BROADWAY
NEW YORK, N.Y. 10013
(212) 349-0700

STRUCTURAL ENGINEER:

MECHANICAL ENGINEER:

5-7 MERCER STREET
NEW YORK, NY

REV. DATE

5-7 MERCER STREET
NEW YORK, NY

DWG. TITLE
PHOTOS, EXISTING & PROPOSED FIRST FLOOR PLANS

SEAL & SIGNATURE

ISSUE DATE 01.16.2015

SCALE 3/8" = 1'-0"

JOB NO. 0706.00

DRAWING REFERENCE NO.

A-100.00

2 OF 4

D.O.B. IDENTIFICATION NUMBER

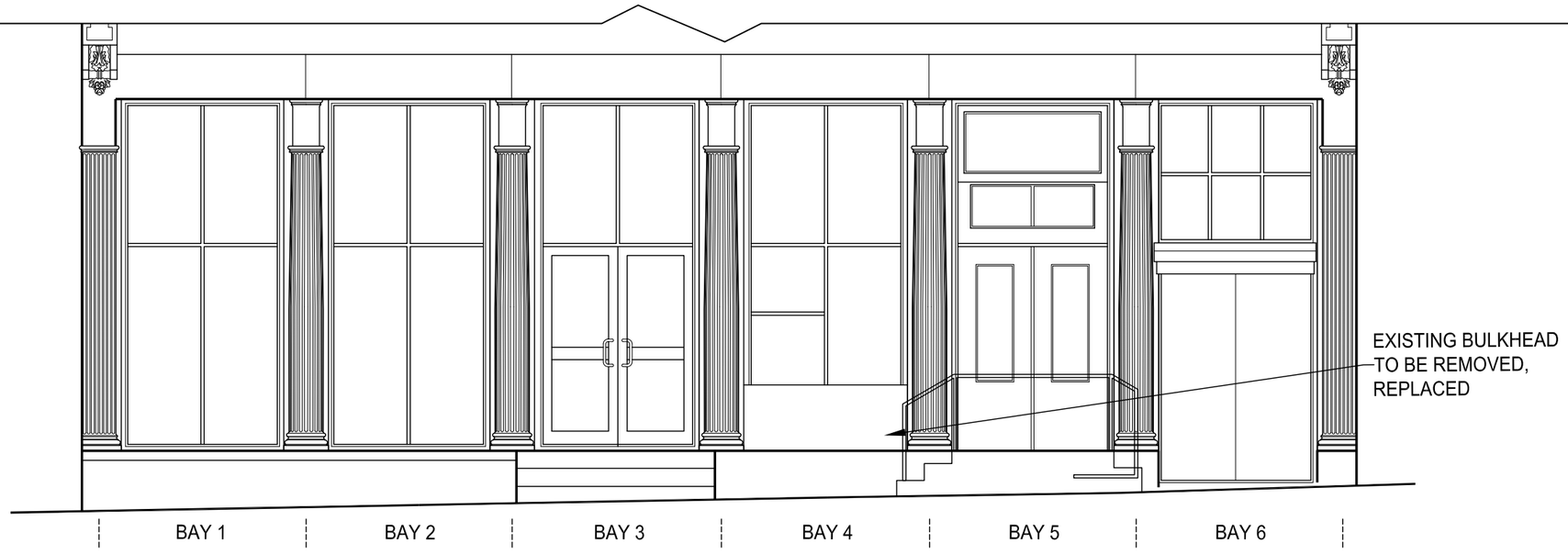

1 FRONT ELEVATION - EXISTING STOREFRONT
SCALE: 3/16"=1'-0"

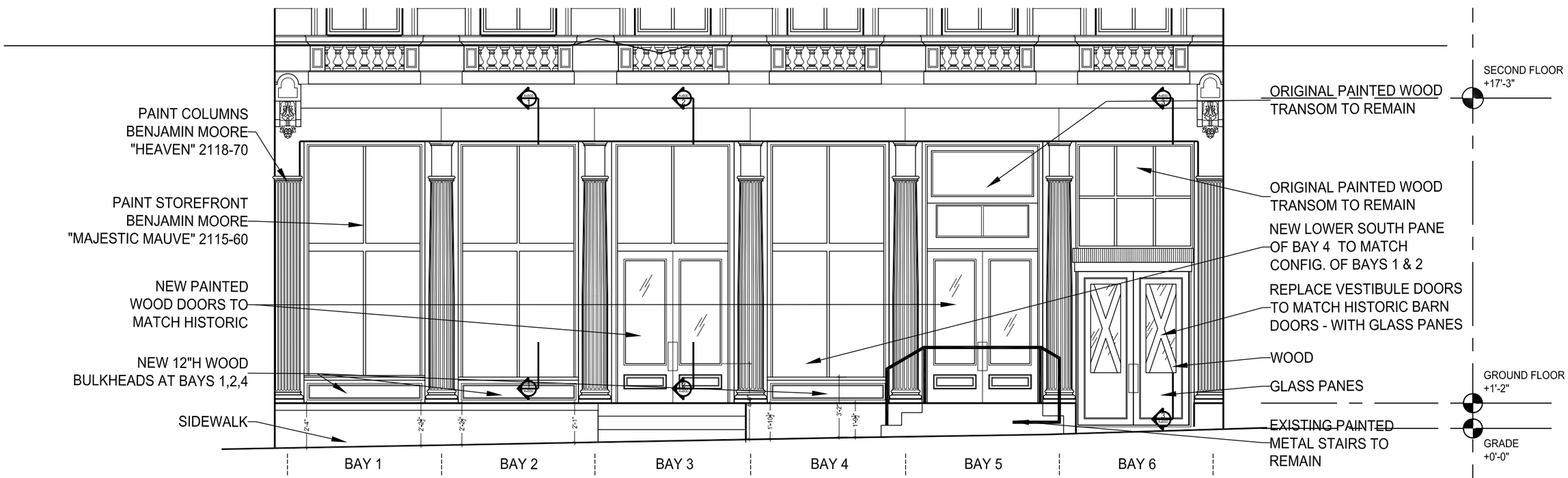

2 FRONT ELEVATION - PROPOSED STOREFRONT
SCALE: 3/16"=1'-0"

THE
OFFICE OF
JOSEPH PELL LOMBARDI
& ASSOCIATES
ARCHITECTS
412 BROADWAY
NEW YORK, N.Y. 10013
(212) 349-0700

STRUCTURAL ENGINEER:

MECHANICAL ENGINEER:

5-7 MERCER STREET
NEW YORK, NY

REV. DATE

5-7 MERCER STREET
NEW YORK, NY

DWG. TITLE
EXISTING & PROPOSED
STOREFRONT ELEVATIONS

SEAL & SIGNATURE

ISSUE DATE
01.16.2015

SCALE
3/8" = 1'-0"

JOB NO.
0706.00

DRAWING REFERENCE NO.
A-200.00
3 OF 4

D.O.B. IDENTIFICATION NUMBER

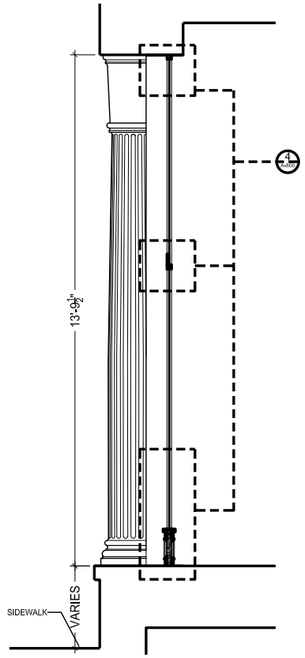

1 BULKHEAD SECTION (TYP)
SCALE: 1/2"=1'-0"

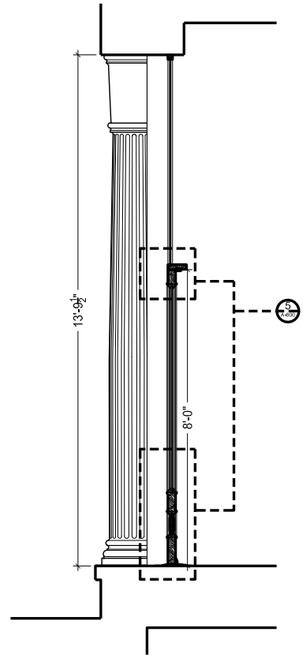

2 ENTRANCE SECTION (TYP)
SCALE: 1/2"=1'-0"

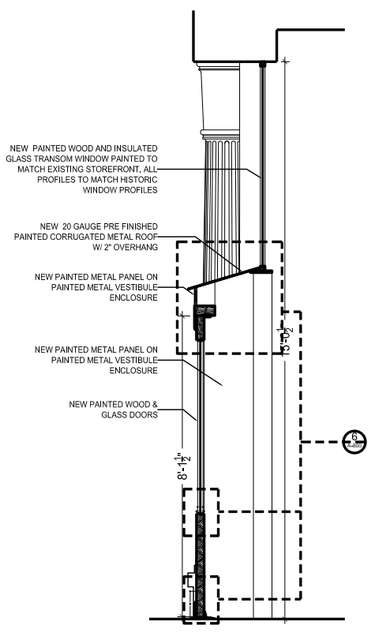

3 ENTRANCE DETAIL SECTION (TYP)
SCALE: 1/2"=1'-0"

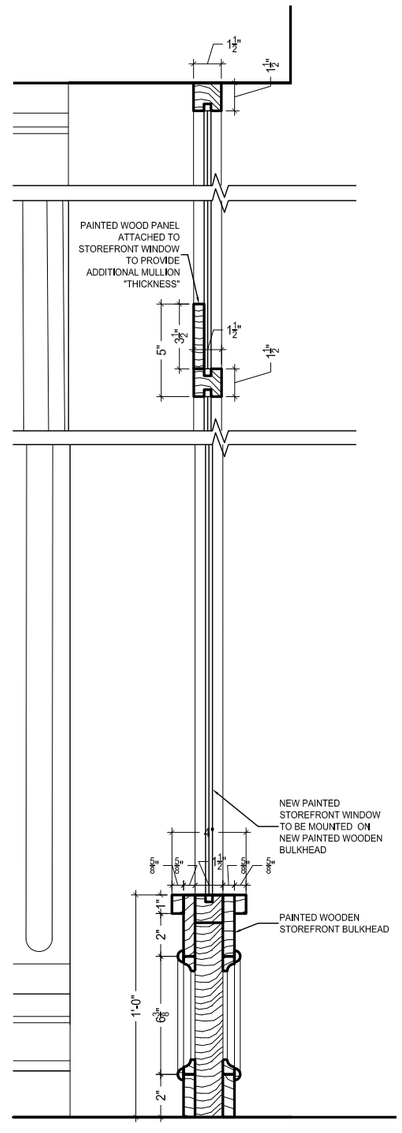

4 ENTRANCE DETAIL SECTION (TYP)
SCALE: 3"=1'-0"

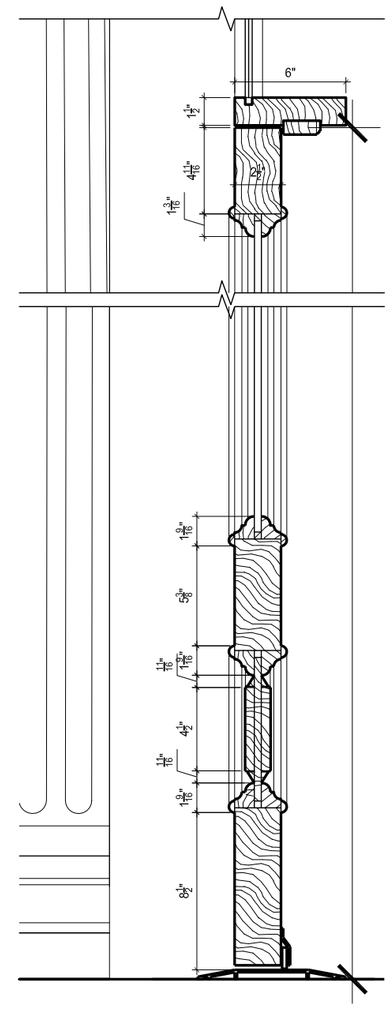

5 ENTRANCE DETAIL SECTION (TYP)
SCALE: 3"=1'-0"

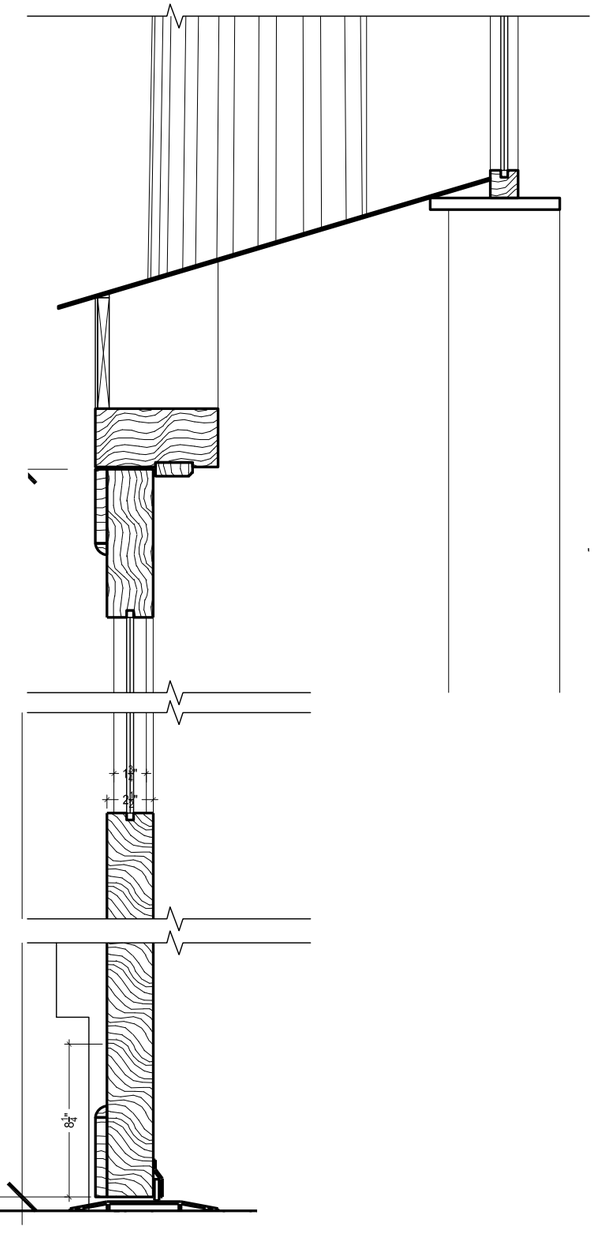

6 ENTRANCE DETAIL SECTION (TYP)
SCALE: 3"=1'-0"

THE
OFFICE OF
JOSEPH PELL LOMBARDI
& ASSOCIATES
ARCHITECTS
412 BROADWAY
NEW YORK, N.Y. 10013
(212) 349-0700

STRUCTURAL ENGINEER:

MECHANICAL ENGINEER:

5-7 MERCER STREET
NEW YORK, NY

REV.	DATE

5-7 MERCER STREET
NEW YORK, NY

DWG. TITLE

STOREFRONT DETAILS

SEAL & SIGNATURE

ISSUE DATE 01.16.2015
SCALE 3/8" = 1'-0"
JOB NO. 0706.00

DRAWING REFERENCE NO.

A-800.00

4 OF 4

D.O.B. IDENTIFICATION NUMBER