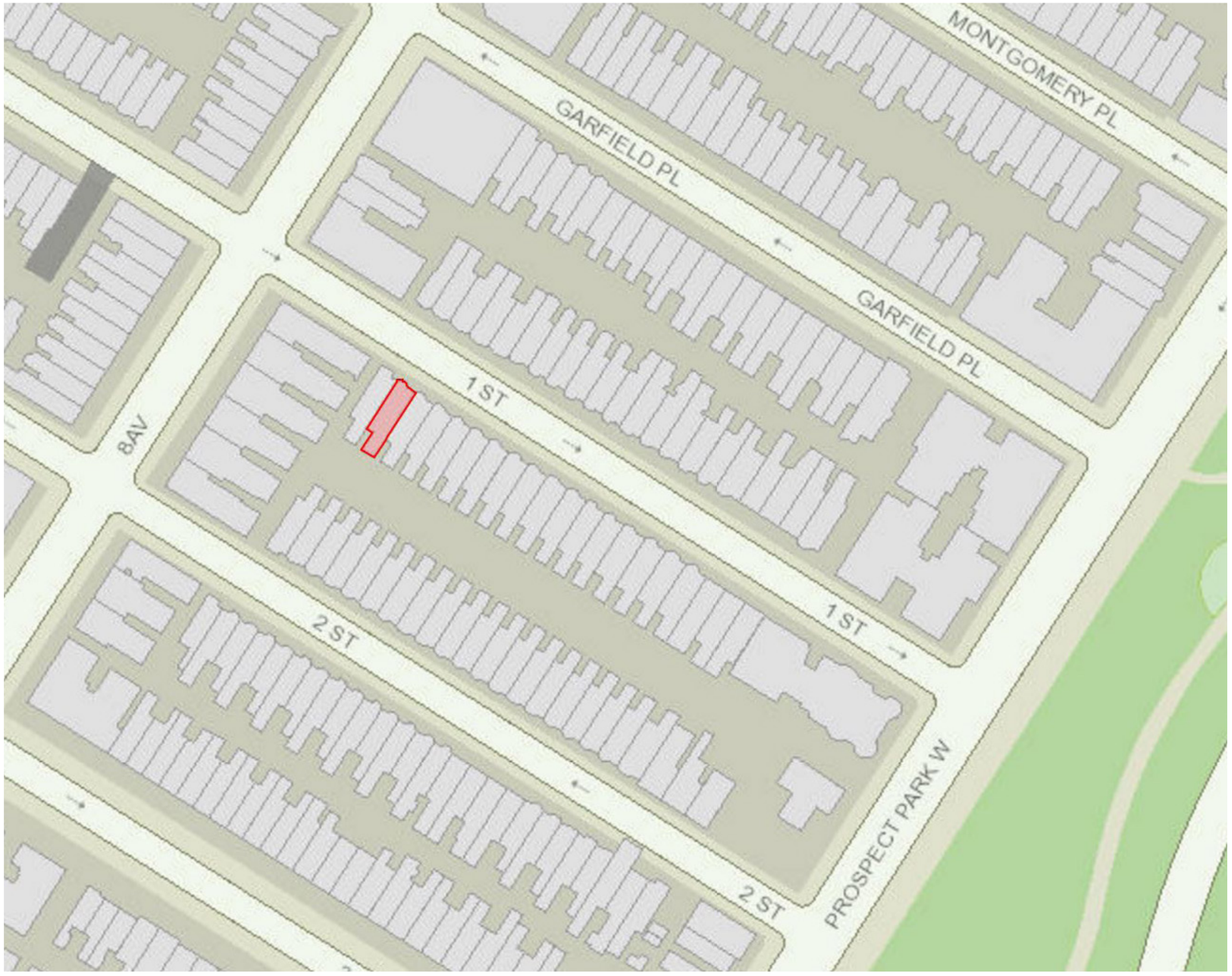

BOROUGH: BROOKLYN
BLOCK: 1077
LOT: 13

ZONING: R7B
ZONING MAP: 16d
HISTORICAL ZONING MAPS: 16d

REAR YARD ADDITION 536 FIRST STREET, BROOKLYN, NY, 11215	Block map	2016.07.28	Büro NY Architecture and Design New York

PHOTO 1 - REAR FACADE

PHOTO 2 - REAR FACADE

PHOTO 3 - REAR FACADE

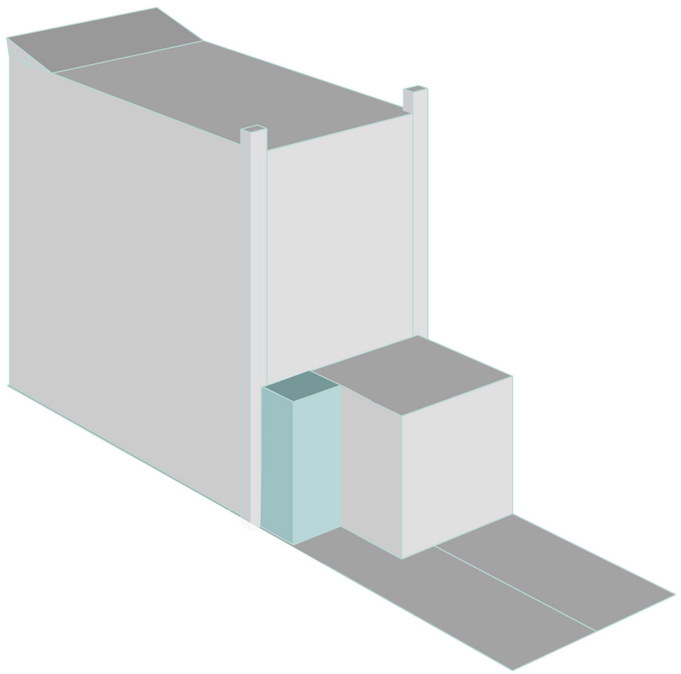

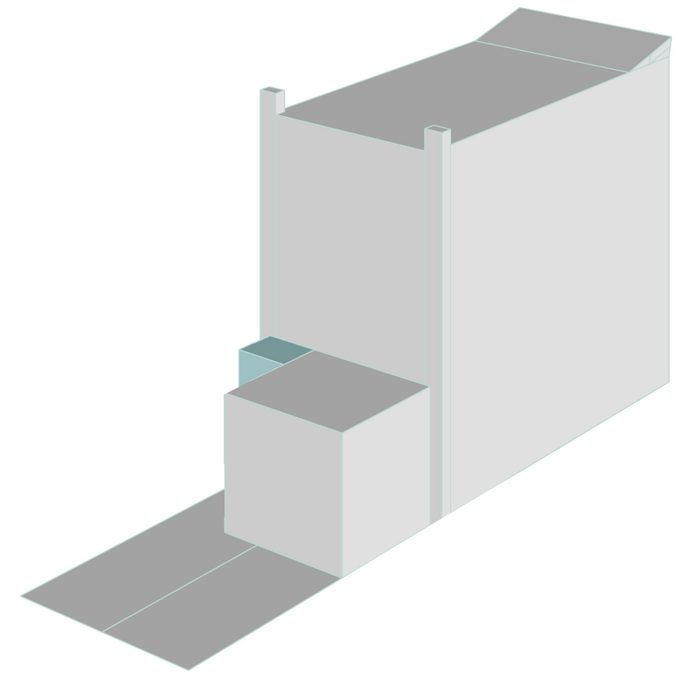

PROPOSED REAR YARD ADDITION

REAR YARD ADDITION
536 FIRST STREET, BROOKLYN, NY, 11215

Alternate Project Views

2016.07.28

Büro NY
Architecture and Design New York

REAR ELEVATION EXISTING

SCALE: 3/16 = 1'-0"

KEY

LEGEND

- CONSTRUCTION TO BE DEMOLISHED
- NEW PARTITION PER DETAIL
- NEW 2 HOUR RATED PARTITION PER DETAIL
- EXISTING PARTITION TO REMAIN
- CABINETRY TO BE DEMOLISHED
- EXISTING DOOR TO REMAIN
- DOOR AND CASING TO BE REMOVED
- NEW DOOR
- CEILING MOUNTED LIGHT FIXTURE
- SD SMOKE & CARBON MONOXIDE DETECTOR HARDWIRED
- RECESSED LIGHT FIXTURE
- VENT
- SD SMOKE DETECTOR

-

536 FIRST

536 First Street
Brooklyn, NY 11215

BÜRO NY

695 President Street
Brooklyn NY 11215
T. 917. 443 0458

APPLICANT OF RECORD

Scott Schnall, P.E.
Schnall Judson E

178 Atlantic Avenue # 2
Brooklyn, NY 11201
T. (718) 875-2036

DRAWING TITLE: **REAR ELEVATION EXISTING**

SCALE: 3/16"=1'-0"

DATE: 2016.07.25

PROJ. NO.: 1.001

A-205.00

REAR YARD ADDITION
536 FIRST STREET, BROOKLYN, NY, 11215

Existing Elevation Drawing

2016.07.28

Büro NY
Architecture and Design New York

REAR ELEVATION PROPOSED

SCALE: 3/16 = 1'-0"

KEY

LEGEND

- CONSTRUCTION TO BE DEMOLISHED
- NEW PARTITION PER DETAIL
- NEW 2 HOUR RATED PARTITION PER DETAIL
- EXISTING PARTITION TO REMAIN
- CABINETRY TO BE DEMOLISHED
- EXISTING DOOR TO REMAIN
- DOOR AND CASING TO BE REMOVED
- NEW DOOR
- CEILING MOUNTED LIGHT FIXTURE
- SD — SMOKE & CARBON MONOXIDE DETECTOR HARDWIRED
- RECESSED LIGHT FIXTURE
- VENT
- SD — SMOKE DETECTOR

-

536 FIRST

536 First Street
Brooklyn, NY 11215

BÜRO NY

695 President Street
Brooklyn NY 11215
T. 917. 443 0458

APPLICANT OF RECORD

Scott Schnall, P.E.
Schnall Judson E

178 Atlantic Avenue # 2
Brooklyn, NY 11201
T. (718) 875-2036

DRAWING TITLE: **REAR ELEVATION PROPOSED**

SCALE: 3/16"=1'-0"

DATE: 2016.07.25

PROJ. NO. 1_001

A-206.00

REAR YARD ADDITION

536 FIRST STREET, BROOKLYN, NY, 11215

Proposed Elevation Drawing

2016.07.28

Büro NY
Architecture and Design New York

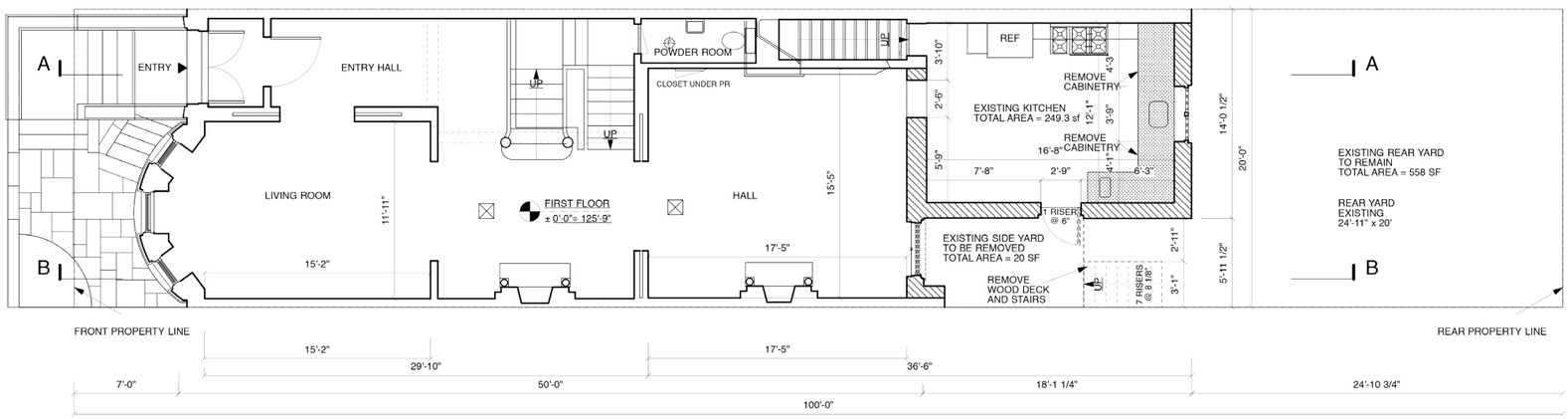

FIRST FLOOR - DEMOLITION PLAN

5 10 20

KEY

LEGEND

- CONSTRUCTION TO BE DEMOLISHED
- NEW PARTITION PER DETAIL
- NEW 2 HOUR RATED PARTITION PER DETAIL
- EXISTING PARTITION TO REMAIN
- CABINETRY TO BE DEMOLISHED
- EXISTING DOOR TO REMAIN
- DOOR AND CASING TO BE REMOVED
- NEW DOOR
- CEILING MOUNTED LIGHT FIXTURE
- SD SMOKE & CARBON MONOXIDE DETECTOR HARDWIRED
- RECESSED LIGHT FIXTURE
- NEW FAN
- NEW SMOKE DETECTOR

-

536 FIRST
536 First Street
Brooklyn, NY 11215

BÜRO NY
695 President Street
Brooklyn NY 11215
T. 917. 443 0458

APPLICANT OF RECORD

Scott Schnall, P.E.
Schnall Judson E

178 Atlantic Avenue # 2
Brooklyn, NY 11201
T. (718) 875-2036

DRAWING TITLE: **1ST FLOOR PLAN DEMOLITION**

SCALE: 3/16"=1'-0"

DATE: 2016.07.25

PROJ. NO. 1_001

A-101.00

REAR YARD ADDITION
536 FIRST STREET, BROOKLYN, NY, 11215

Demolition First Floor Plan Drawing

2016.07.28

Büro NY
Architecture and Design New York

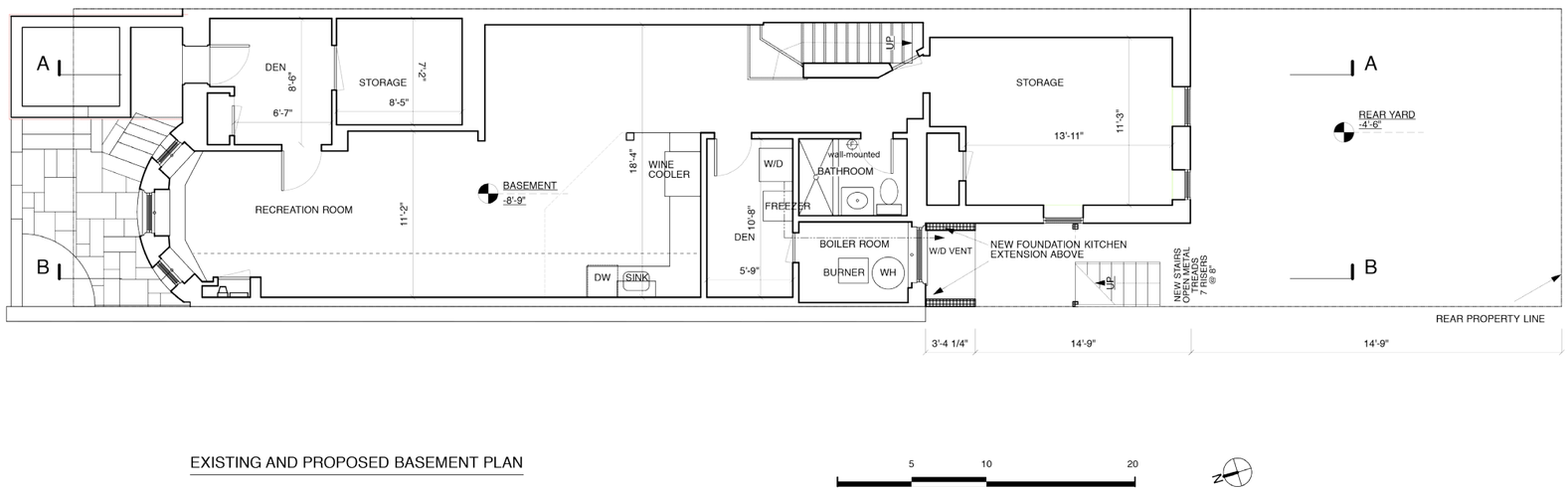

EXISTING AND PROPOSED BASEMENT PLAN

5 10 20

N

KEY

LEGEND

- CONSTRUCTION TO BE DEMOLISHED
- NEW PARTITION PER DETAIL
- NEW 2 HOUR RATED PARTITION PER DETAIL
- EXISTING PARTITION TO REMAIN
- CABINETRY TO BE DEMOLISHED
- EXISTING DOOR TO REMAIN
- DOOR AND CASING TO BE REMOVED
- NEW DOOR
- CEILING MOUNTED LIGHT FIXTURE
- SD SMOKE & CARBON MONOXIDE DETECTOR HARDWIRED
- RECESSED LIGHT FIXTURE
- VENT
- SD SMOKE DETECTOR

-

536 FIRST

536 First Street
Brooklyn, NY 11215

BÜRO NY

695 President Street
Brooklyn NY 11215
T. 917. 443 0458

APPLICANT OF RECORD

Scott Schnall, P.E.
Schnall Judson E

178 Atlantic Avenue # 2
Brooklyn, NY 11201
T. (718) 875-2036

DRAWING TITLE:
BASEMENT PLAN

SCALE: 3/16"=1'-0"

DATE: 2016.07.25

PROJ. NO. 1_001

A-100.00

REAR YARD ADDITION
536 FIRST STREET, BROOKLYN, NY, 11215

Proposed First Floor Plan Drawing

2016.07.28

Büro NY
Architecture and Design New York

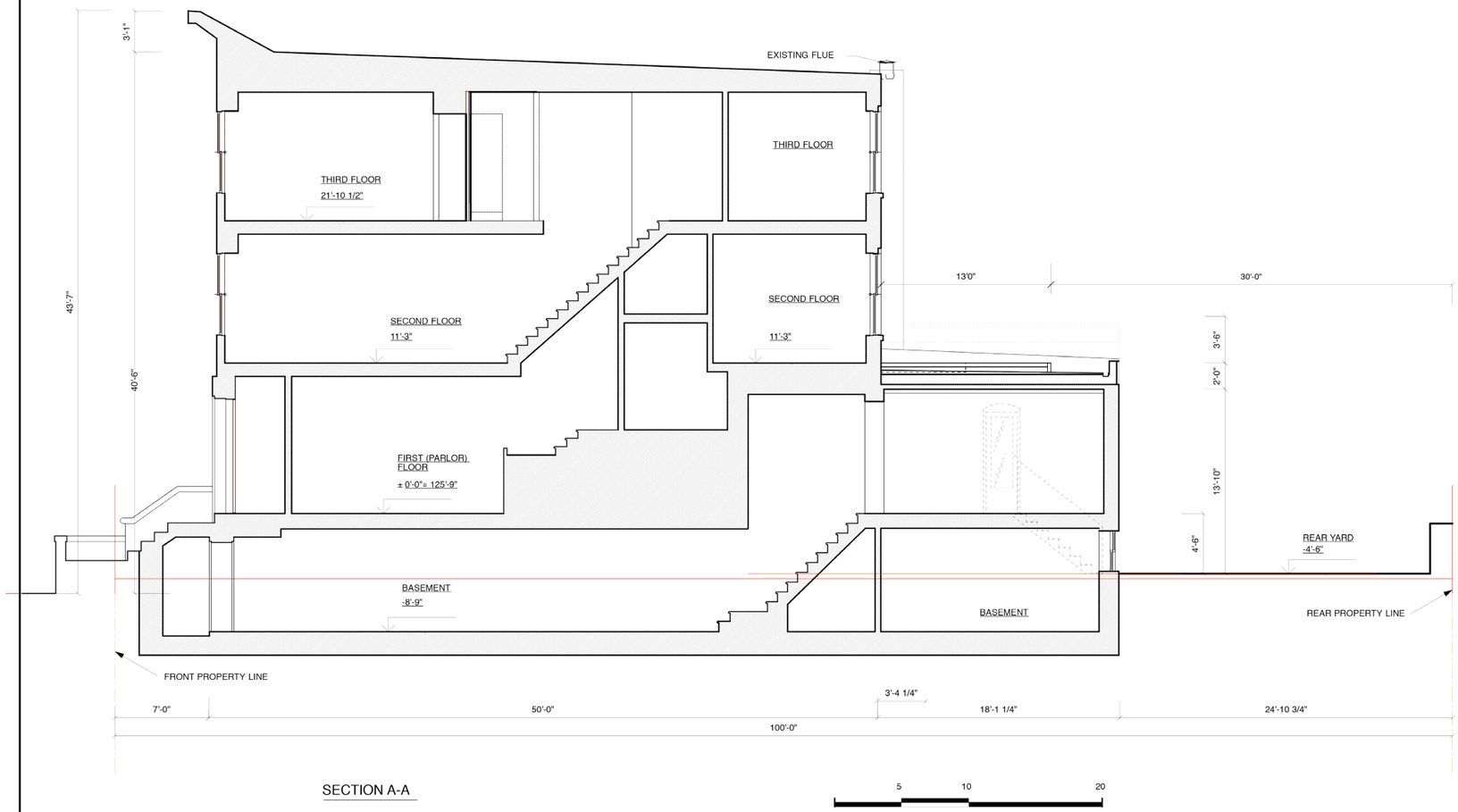

SECTION A-A

-

536 FIRST

536 First Street
Brooklyn, NY 11215

BÜRO NY

695 President Street
Brooklyn NY 11215
T. 917. 443 0458

APPLICANT OF RECORD

Scott Schnall, P.E.
Schnall Judson E

178 Atlantic Avenue # 2
Brooklyn, NY 11201
T. (718) 875-2036

DRAWING TITLE: **SECTION A-A EXISTING**

SCALE: 3/16"=1'-0"

DATE: 2016.07.25

PROJ. NO. 1_001

A-208.00

REAR YARD ADDITION
536 FIRST STREET, BROOKLYN, NY, 11215

Existing Section A-A Drawing

2016.07.28

Büro NY
Architecture and Design New York

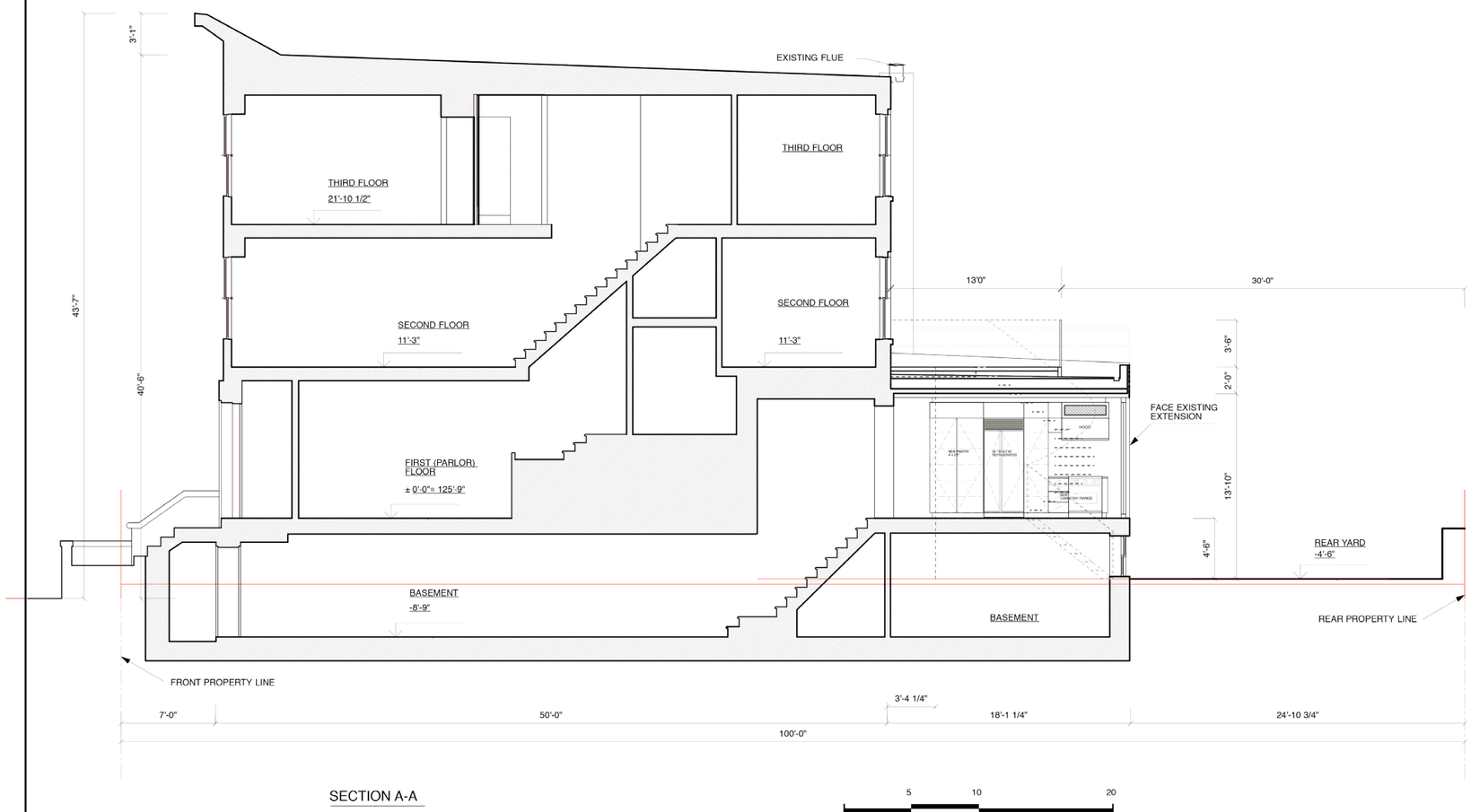

SECTION A-A

-

536 FIRST

536 First Street
Brooklyn, NY 11215

BÜRO NY

695 President Street
Brooklyn NY 11215
T. 917. 443 0458

APPLICANT OF RECORD

Scott Schnall, P.E.
Schnall Judson E

178 Atlantic Avenue # 2
Brooklyn, NY 11201
T. (718) 875-2036

DRAWING TITLE: **SECTION A-A NEW CONSTRUCTION**

SCALE: 3/16"=1'-0"

DATE: 2016.07.25

PROJ. NO. 1_001

A-202.00

REAR YARD ADDITION
536 FIRST STREET, BROOKLYN, NY, 11215

Proposed Section A-A Drawing

2016.07.28

Büro NY
Architecture and Design New York

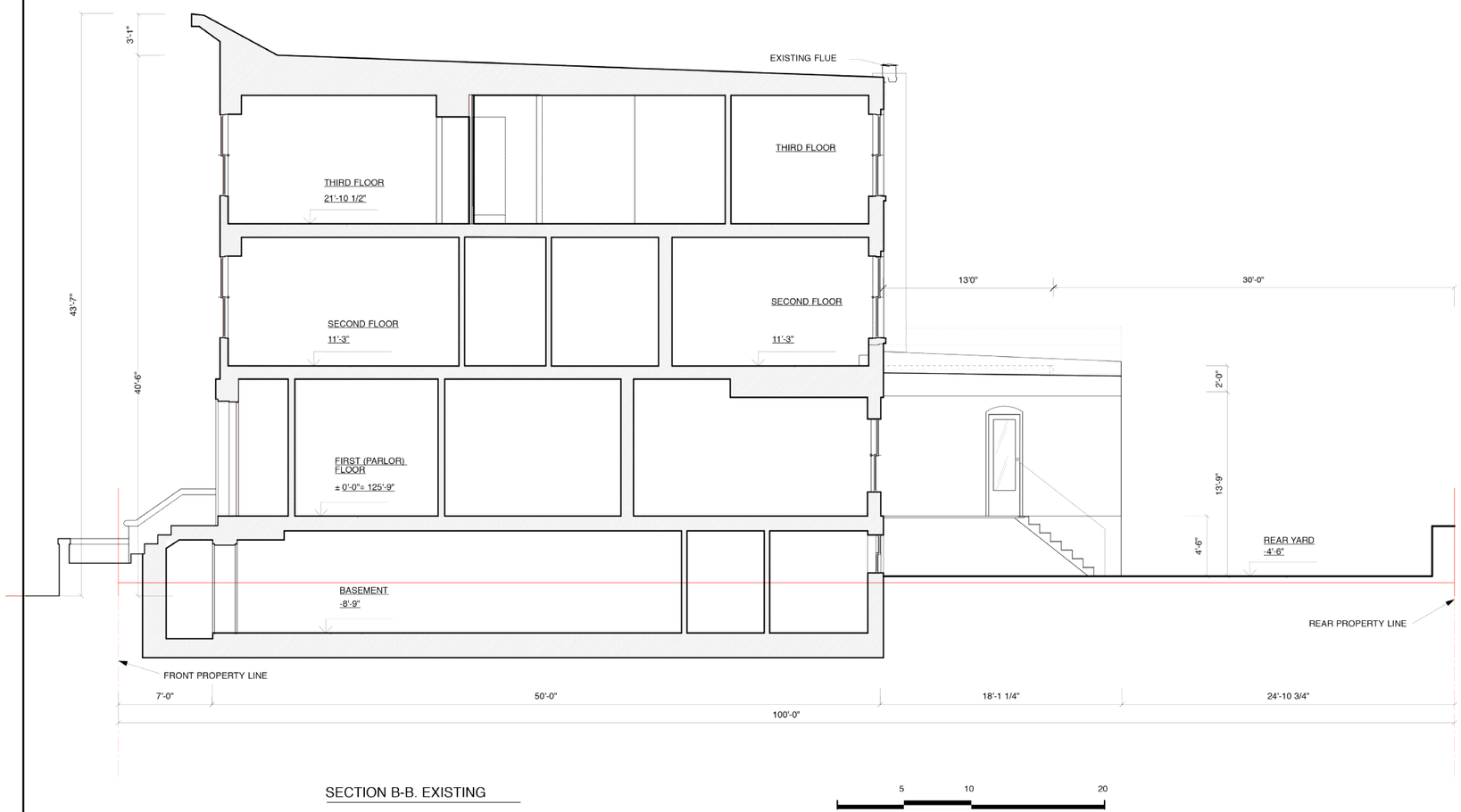

SECTION B-B. EXISTING

-

536 FIRST
536 First Street
Brooklyn, NY 11215

BÜRO NY
695 President Street
Brooklyn NY 11215
T. 917. 443 0458

APPLICANT OF RECORD

Scott Schnall, P.E.
Schnall Judson E

178 Atlantic Avenue # 2
Brooklyn, NY 11201
T. (718) 875-2036

DRAWING TITLE: **SECTION B-B EXISTING**

SCALE: 3/16"=1'-0"

DATE: 2016.07.25

PROJ. NO. 1_001

A-210.00

REAR YARD ADDITION
536 FIRST STREET, BROOKLYN, NY, 11215

Existing Section B-B Drawing

2016.07.28

Büro NY
Architecture and Design New York

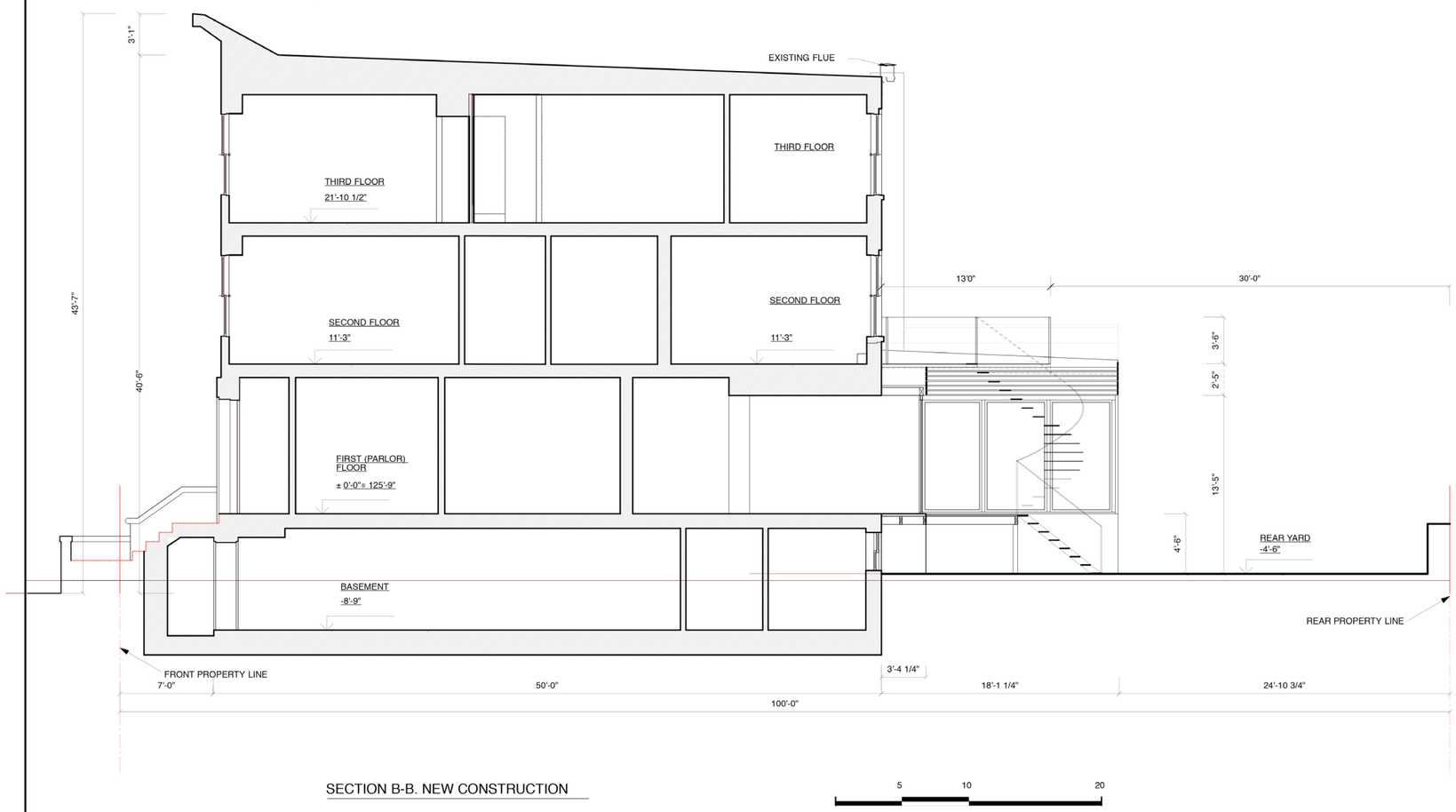

SECTION B-B. NEW CONSTRUCTION

-

536 FIRST
536 First Street
Brooklyn, NY 11215

BÜRO NY
695 President Street
Brooklyn NY 11215
T. 917. 443 0458

APPLICANT OF RECORD

Scott Schnall, P.E.
Schnall Judson E

178 Atlantic Avenue # 2
Brooklyn, NY 11201
T. (718) 875-2036

DRAWING TITLE: **SECTION B-B NEW CONSTRUCTION**

SCALE: 3/16"=1'-0"

DATE: 2016.07.25

PROJ. NO. 1_001

A-209.00

REAR YARD ADDITION
536 FIRST STREET, BROOKLYN, NY, 11215

Proposed Section B-B Drawing

2016.07.28

Büro NY
Architecture and Design New York

EXISTING FACADE

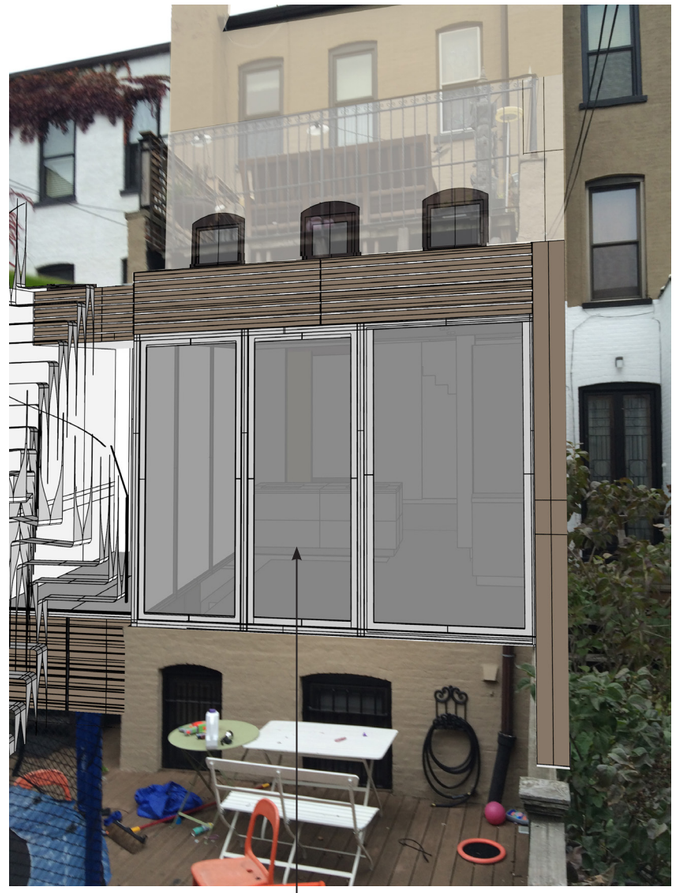

ADDITION AND PROPOSED
FACADE PHOTOSHOPPED IN

REAR YARD ADDITION
536 FIRST STREET, BROOKLYN, NY, 11215

Block Photographs Showing
Addition in Context

2016.07.28

Büro NY
Architecture and Design New York

EXISTING FACADE

ADDITION PHOTOSHOPPED IN

REAR YARD ADDITION
536 FIRST STREET, BROOKLYN, NY, 11215

Block Photographs Showing
Addition in Context

2016.07.28

Büro NY
Architecture and Design New York

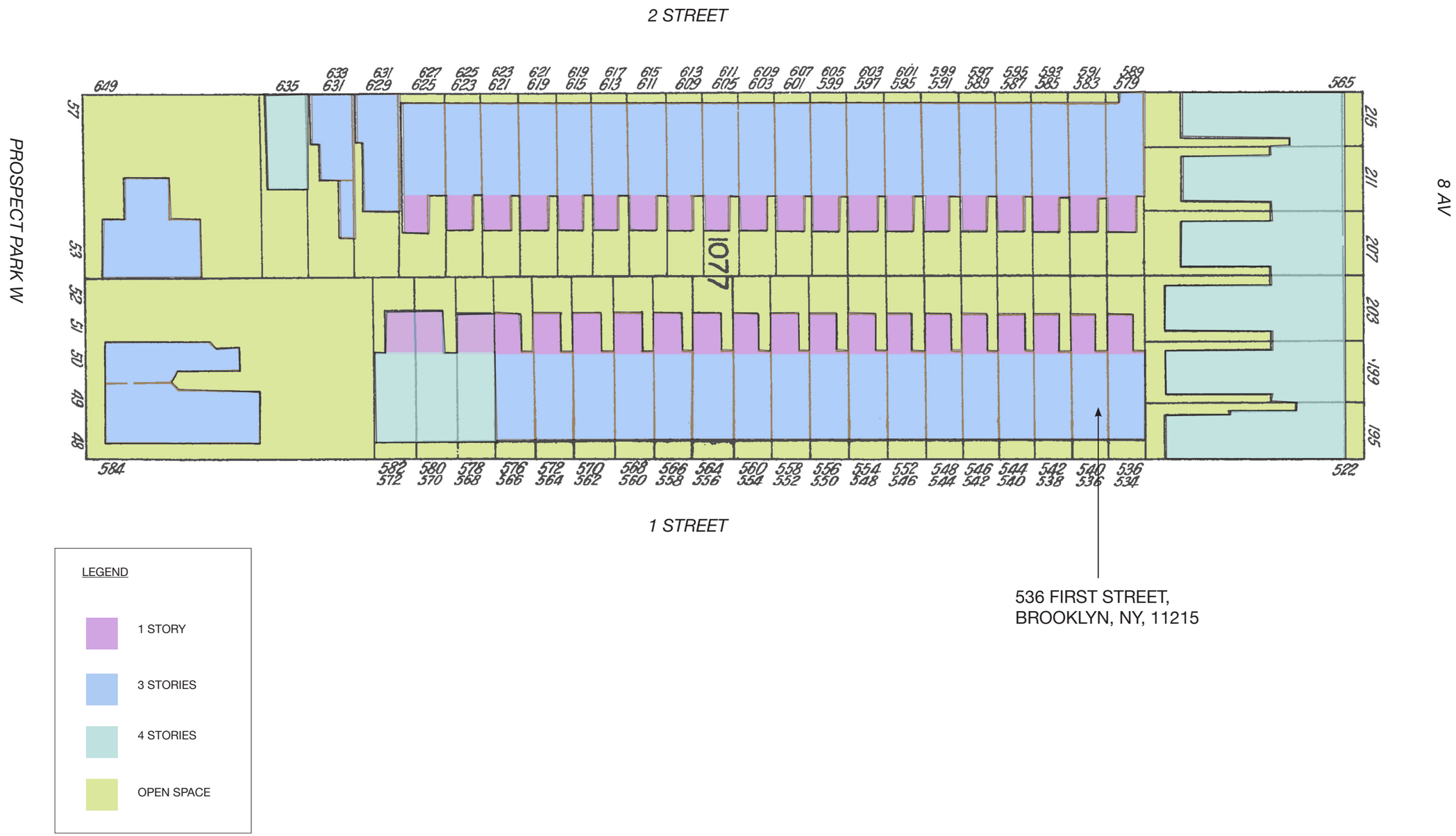

REAR YARD ADDITION
536 FIRST STREET, BROOKLYN, NY, 11215

Block Plan

2016.07.28

Büro NY
Architecture and Design New York