The Conservative Synagogue of Fifth Avenue . 11 East 11th Street . New York City, New York

1 South Facade

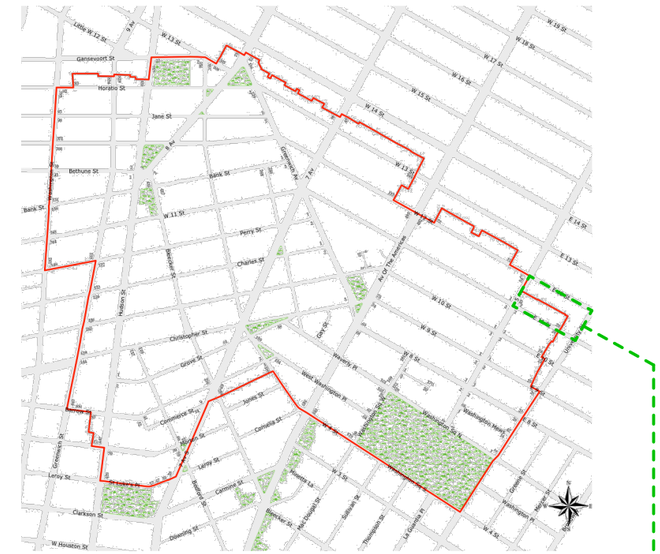

2 Greenwich Village Historic District

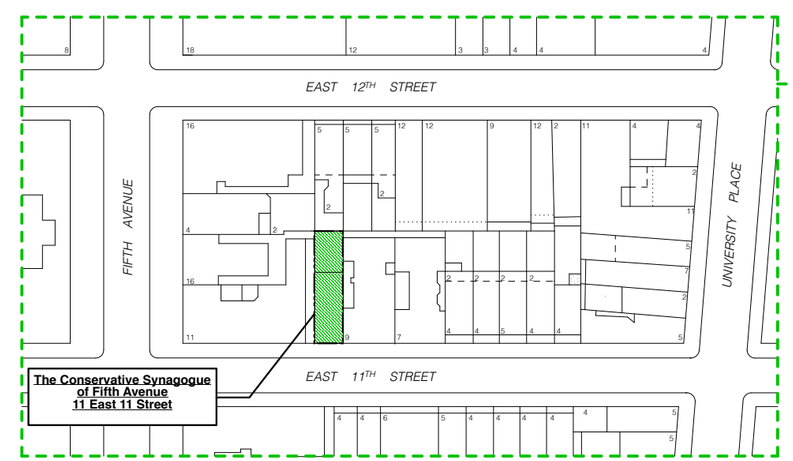

3 Block Plan

THE DRAWINGS, SPECIFICATIONS, MODELS, AND OTHER MATERIALS PREPARED BY THE ARCHITECT FOR THIS PROJECT AND THE IDEAS CONTAINED HEREIN ARE INSTRUMENTS OF ARCHITECTS SERVICE AND ARE TO REMAIN THE PROPERTY OF THE ARCHITECT. THEY ARE NOT TO BE USED ON THIS PROJECT AND, UNLESS OTHERWISE PROVIDED, THE ARCHITECT SHALL BE DEEMED THE AUTHOR OF THESE MATERIALS AND SHALL RETAIN ALL COMMON LAW, STATUTORY AND OTHER RESERVED RIGHTS, INCLUDING THE COPY RIGHT.

The Conservative Synagogue of Fifth Avenue
11 East 11 Street
New York . New York . 10003

Jonathan S Kammel, Architect
372 Central Park West . New York, New York
Phone: 917.593.7020
e-mail: jk@jskammel.com

LPC.A.1

Block Plan

December 18, 2015

LANDMARKS PRESERVATION COMMISSION

20 VESEY STREET, NEW YORK, NEW YORK 10007

566-7577

January 14, 1982

Mr. Edgar Tafel
14 East 11th Street
New York, New York 10003

LPC-81766
CERTIFICATE OF APPROPRIATENESS NO. 739
11 East 11th Street
GREENWICH VILLAGE HISTORIC DISTRICT
Block 569, Lot 38.

Dear Mr. Tafel:

Pursuant to Section 207-6.0 of the Administrative Code of the City of New York and following the Public Hearings of November 24, 1981 and December 10, 1981, the Landmarks Preservation Commission at its Executive Session of December 22, 1981, voted to grant a Certificate of Appropriateness for the proposed alterations and additions to 11 East 11th Street, in accordance with your application dated October 29, 1981 and drawings dated November 16, 1981.

The Certificate specifically covers the following aspects of the design: The design of the fence enclosing the site along 11th Street; the design of the courtyard; and the basic concept of the alterations and additions to the building -- the demolition of the existing facade, the massing of the addition, and its placement on the site.

The Certificate does not cover the details of the proposed new facade, which the Commission requested be re-studied and returned for additional review at a future Executive Session. In the Commission's discussion of the design, details that were specifically mentioned included: a) the division of the facade into three vertical bays, each treated differently in its upper and lower parts, creating an appearance that was felt to be complicated and which raised questions regarding its relationship to the adjacent buildings on 11th Street; b) the scale of the elements on the facade, which were felt to be of a size that would be expected on a larger building and which again raised questions regarding the relationship to the proposed facade to the adjacent facades on 11th Street; c) the materials, articulation and size of the parapet on the proposed facade, which was cited as an important feature of the design and which was felt to be exceedingly prominent in the form presented to the Commission.

Thank you for your cooperation.

Sincerely,

Kent Barwick
Chairman

cc: Community Board #2

1 1982 Certificate of Appropriateness

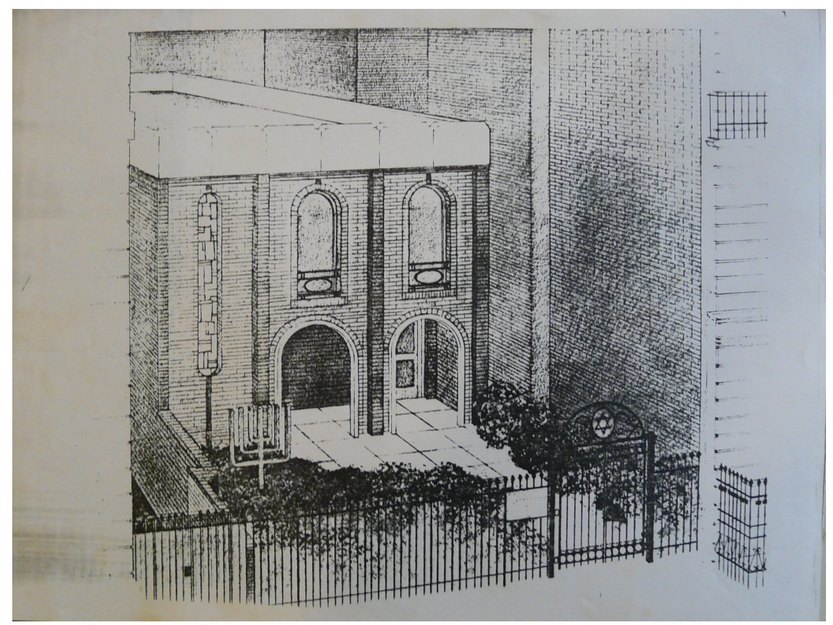

2 Conservative Synagogue of Fifth Avenue Proposed Design, Edgar Tafel, 1981

THE DRAWINGS, SPECIFICATIONS, MODELS, AND OTHER MATERIALS PREPARED BY THE ARCHITECT FOR THIS PROJECT AND THE IDEAS CONTAINED THEREIN ARE INSTRUMENTS OF THE ARCHITECT'S SERVICE FOR USE SOLELY WITH RESPECT TO THIS PROJECT AND, UNLESS OTHERWISE PROVIDED, THE ARCHITECT SHALL BE DEEMED THE AUTHOR OF THESE MATERIALS AND SHALL RETAIN ALL COMMON LAW, STATUTORY AND OTHER RESERVED RIGHTS, INCLUDING THE COPY RIGHT.

The Conservative Synagogue of Fifth Avenue
11 East 11 Street
New York, New York, 10003

Jonathan S Kammel, Architect
372 Central Park West, New York, New York
Phone: 917.593.7020
e-mail: jk@jskammel.com

LPC.A.1A

C of A 1982
Edgar Tafel, Arch.

January 14, 2016

1 South Elevation viewed from 11 St.

2 South Elevation

THE DRAWINGS, SPECIFICATIONS, MODELS, AND OTHER MATERIALS PREPARED BY THE ARCHITECT FOR THIS PROJECT AND THE IDEAS CONTAINED THEREIN ARE INSTRUMENTS OF THE ARCHITECT'S SERVICE FOR USE SOLELY WITH RESPECT TO THIS PROJECT AND, UNLESS OTHERWISE PROVIDED, THE ARCHITECT SHALL BE DEEMED THE AUTHOR OF THESE MATERIALS AND SHALL RETAIN ALL COMMON LAW, STATUTORY AND OTHER RESERVED RIGHTS, INCLUDING THE COPY RIGHT.

The Conservative Synagogue of Fifth Avenue

11 East 11 Street
New York . New York . 10003

Jonathan S Kammel, Architect
372 Central Park West . New York, New York
Phone: 917.593.7020
e-mail: jk@jskammel.com

LPC.A.2

Existing Conditions

December 18, 2015

1 Facade Detail, Stucco and Windows

2 Projecting Entry

THE DRAWINGS, SPECIFICATIONS, MODELS, AND OTHER MATERIALS PREPARED BY THE ARCHITECT FOR THIS PROJECT AND THE IDEAS CONTAINED THEREIN ARE INSTRUMENTS OF THE ARCHITECT'S SERVICE FOR USE SOLELY WITH RESPECT TO THIS PROJECT AND, UNLESS OTHERWISE PROVIDED, THE ARCHITECT SHALL BE DEEMED THE AUTHOR OF THESE MATERIALS AND SHALL RETAIN ALL COMMON LAW, STATUTORY AND OTHER RESERVED RIGHTS, INCLUDING THE COPYRIGHT.

The Conservative Synagogue of Fifth Avenue
11 East 11 Street
New York . New York . 10003

Jonathan S Kammel, Architect
372 Central Park West . New York, New York
Phone: 917.593.7020
e-mail: jk@jskammel.com

LPC.A.3

Existing Conditions

December 18, 2015

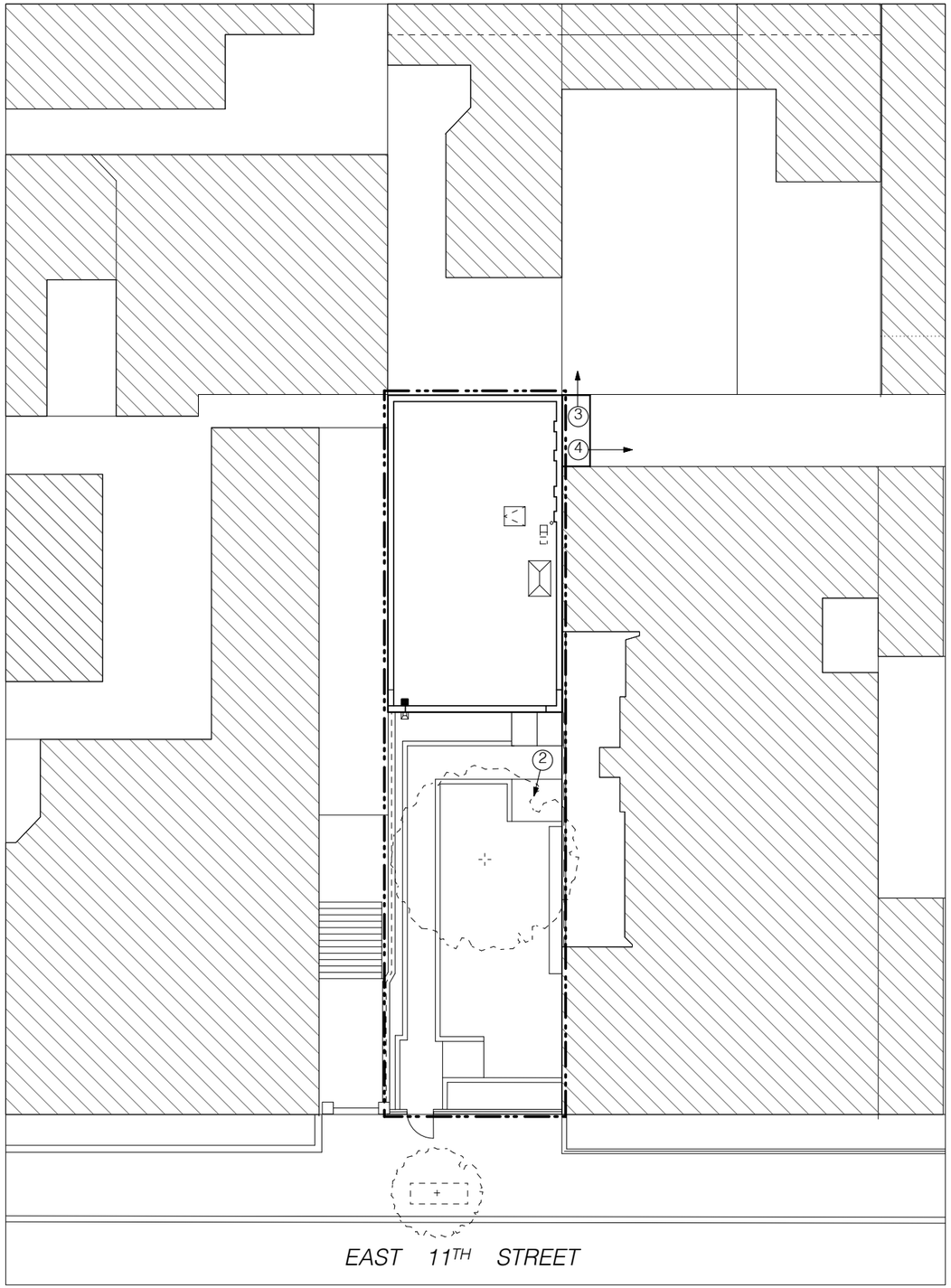

1 Key Plan
Do Not Scale

N

2 Front Yard Looking South

3 Rear Yard Looking North

4 Rear Yard Looking East

THE DRAWINGS, SPECIFICATIONS, MODELS, AND OTHER MATERIALS PREPARED BY THE ARCHITECT FOR THIS PROJECT AND THE IDEAS CONTAINED THEREIN ARE INSTRUMENTS OF THE ARCHITECT'S SERVICE FOR USE SOLELY WITH RESPECT TO THIS PROJECT AND, UNLESS OTHERWISE PROVIDED, THE ARCHITECT SHALL BE DEEMED THE AUTHOR OF THESE MATERIALS AND SHALL RETAIN ALL COMMON LAW, STATUTORY AND OTHER RESERVED RIGHTS, INCLUDING THE COPY RIGHT.

The Conservative Synagogue of Fifth Avenue
11 East 11 Street
New York . New York . 10003

Jonathan S Kammel, Architect
372 Central Park West . New York, New York
Phone: 917.593.7020
e-mail: jk@jskammel.com

LPC.A.4

Existing Conditions

December 18, 2015

1 1857 Perris, NYPL

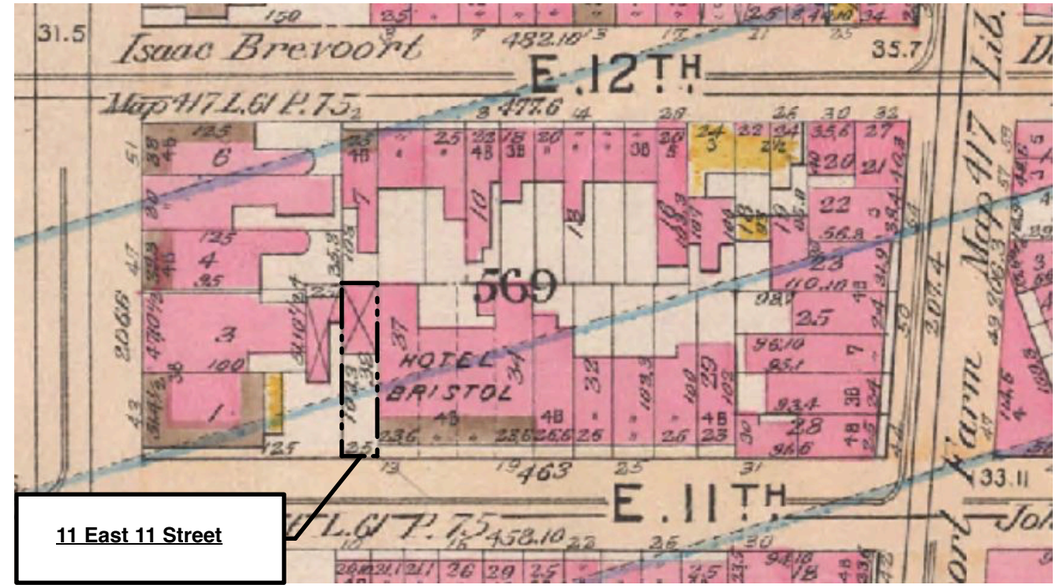

2 1896 Bromley, NYPL

3 1925 BROMLEY

THE DRAWINGS, SPECIFICATIONS, MODELS, AND OTHER MATERIALS PREPARED BY THE ARCHITECT FOR THIS PROJECT AND THE IDEAS CONTAINED THEREIN ARE INSTRUMENTS OF THE ARCHITECT'S SERVICE FOR USE SOLELY WITH RESPECT TO THIS PROJECT AND, UNLESS OTHERWISE PROVIDED, THE ARCHITECT SHALL BE DEEMED THE AUTHOR OF THESE MATERIALS AND SHALL RETAIN ALL COMMON LAW, STATUTORY AND OTHER RESERVED RIGHTS, INCLUDING THE COPY RIGHT.

The Conservative Synagogue of Fifth Avenue
11 East 11 Street
New York . New York . 10003

Jonathan S Kammel, Architect
372 Central Park West . New York, New York
Phone: 917.593.7020
e-mail: jk@jskammel.com

LPC.A.5

Historical Maps

December 18, 2015

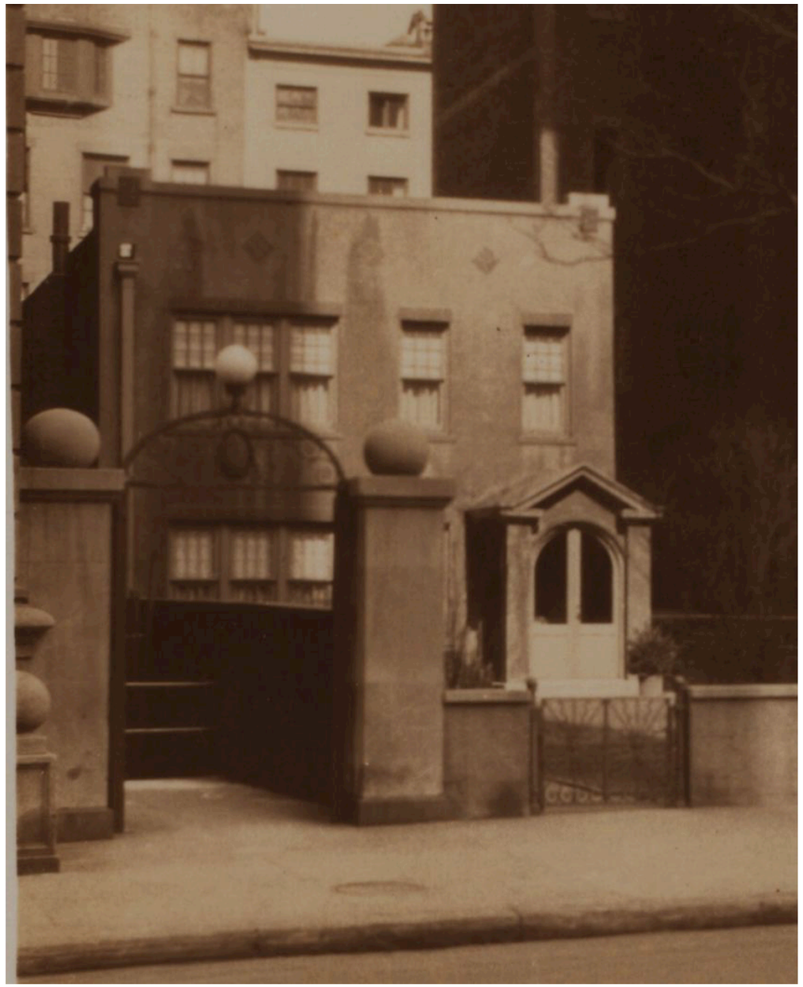

1 1931 NYPL

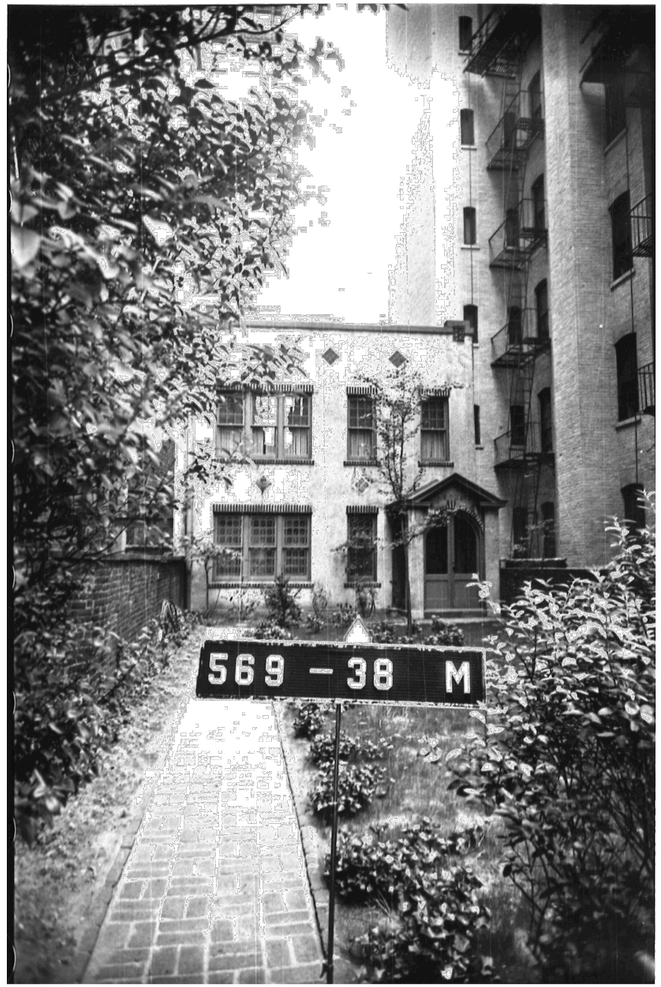

2 1940'S Tax Photo

THE DRAWINGS, SPECIFICATIONS, MODELS, AND OTHER MATERIALS PREPARED BY THE ARCHITECT FOR THIS PROJECT AND THE IDEAS CONTAINED THEREIN ARE INSTRUMENTS OF THE ARCHITECT'S SERVICE FOR USE SOLELY WITH RESPECT TO THIS PROJECT AND, UNLESS OTHERWISE PROVIDED, THE ARCHITECT SHALL BE DEEMED THE AUTHOR OF THESE MATERIALS AND SHALL RETAIN ALL COMMON LAW, STATUTORY AND OTHER RESERVED RIGHTS, INCLUDING THE COPY RIGHT.

The Conservative Synagogue of Fifth Avenue

11 East 11 Street
New York , New York . 10003

Jonathan S Kammel, Architect
372 Central Park West , New York, New York
Phone: 917.593.7020
e-mail: jk@jskammel.com

LPC.A.6

South Facade

December 18, 2015

1 c. 1980 Stanley Lesser

2 c. 1980 Stanley Lesser

THE DRAWINGS, SPECIFICATIONS, MODELS, AND OTHER MATERIALS PREPARED BY THE ARCHITECT FOR THIS PROJECT AND THE IDEAS CONTAINED THEREIN ARE INSTRUMENTS OF THE ARCHITECT'S SERVICE FOR USE SOLELY WITH RESPECT TO THIS PROJECT AND, UNLESS OTHERWISE PROVIDED, THE ARCHITECT SHALL BE DEEMED THE AUTHOR OF THESE MATERIALS AND SHALL RETAIN ALL COMMON LAW, STATUTORY AND OTHER RESERVED RIGHTS, INCLUDING THE COPY RIGHT.

The Conservative Synagogue of Fifth Avenue
11 East 11 Street
New York . New York . 10003

Jonathan S Kammel, Architect
372 Central Park West . New York, New York
Phone: 917.593.7020
e-mail: jk@jskammel.com

LPC.A.7

Lesser Photos

December 18, 2015

1 Entrance Foyer (Sanctuary to the left)

2 Sanctuary Looking North

3 Sanctuary Looking South

THE DRAWINGS, SPECIFICATIONS, MODELS, AND OTHER MATERIALS PREPARED BY THE ARCHITECT FOR THIS PROJECT AND THE IDEAS CONTAINED THEREIN ARE INSTRUMENTS OF THE ARCHITECT'S SERVICE FOR USE SOLELY WITH RESPECT TO THIS PROJECT AND, UNLESS OTHERWISE PROVIDED, THE ARCHITECT SHALL BE DEEMED THE AUTHOR OF THESE MATERIALS AND SHALL RETAIN ALL COMMON LAW, STATUTORY AND OTHER RESERVED RIGHTS, INCLUDING THE COPY RIGHT.

The Conservative Synagogue of Fifth Avenue

11 East 11 Street
New York . New York . 10003

Jonathan S Kammel, Architect
372 Central Park West . New York, New York
Phone: 917.593.7020
e-mail: jk@jskammel.com

LPC.A.8

Existing Conditions

December 18, 2015

1 Second Floor Corridor Looking North

2 Second Floor Meeting Room Looking South

3 Second Floor Meeting Room Looking East

THE DRAWINGS, SPECIFICATIONS, MODELS, AND OTHER MATERIALS PREPARED BY THE ARCHITECT FOR THIS PROJECT AND THE IDEAS CONTAINED THEREIN ARE INSTRUMENTS OF THE ARCHITECT'S SERVICE FOR USE SOLELY WITH RESPECT TO THIS PROJECT AND, UNLESS OTHERWISE PROVIDED, THE ARCHITECT SHALL BE DEEMED THE AUTHOR OF THESE MATERIALS AND SHALL RETAIN ALL COMMON LAW, STATUTORY AND OTHER RESERVED RIGHTS, INCLUDING THE COPY RIGHT.

The Conservative Synagogue of Fifth Avenue
11 East 11 Street
New York . New York . 10003

Jonathan S Kammel, Architect
372 Central Park West . New York, New York
Phone: 917.593.7020
e-mail: jk@jskammel.com

LPC.A.9

Existing Conditions

December 18, 2015

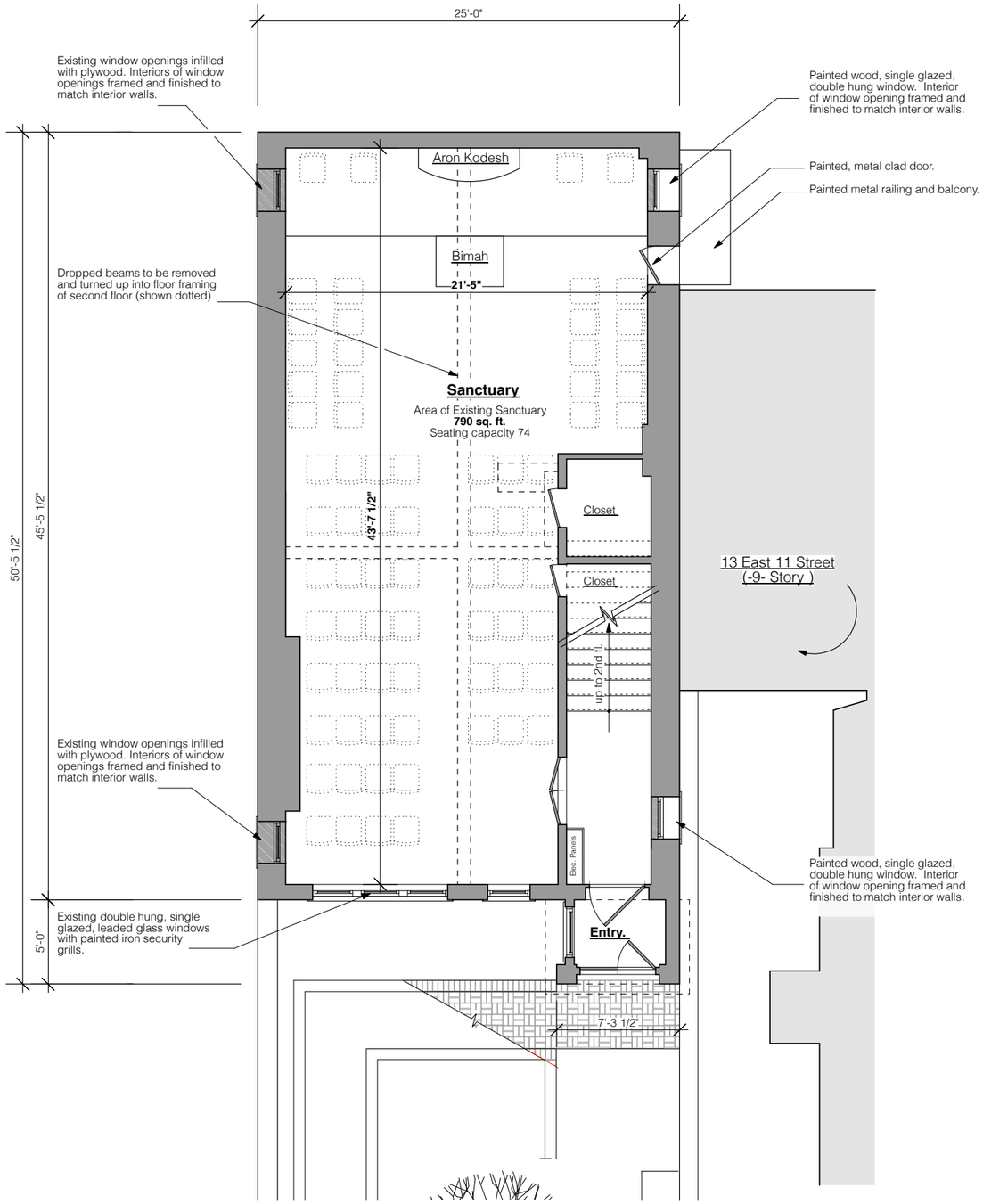

1 Existing First Floor Plan

0 2 4 6 8 10 FT

N

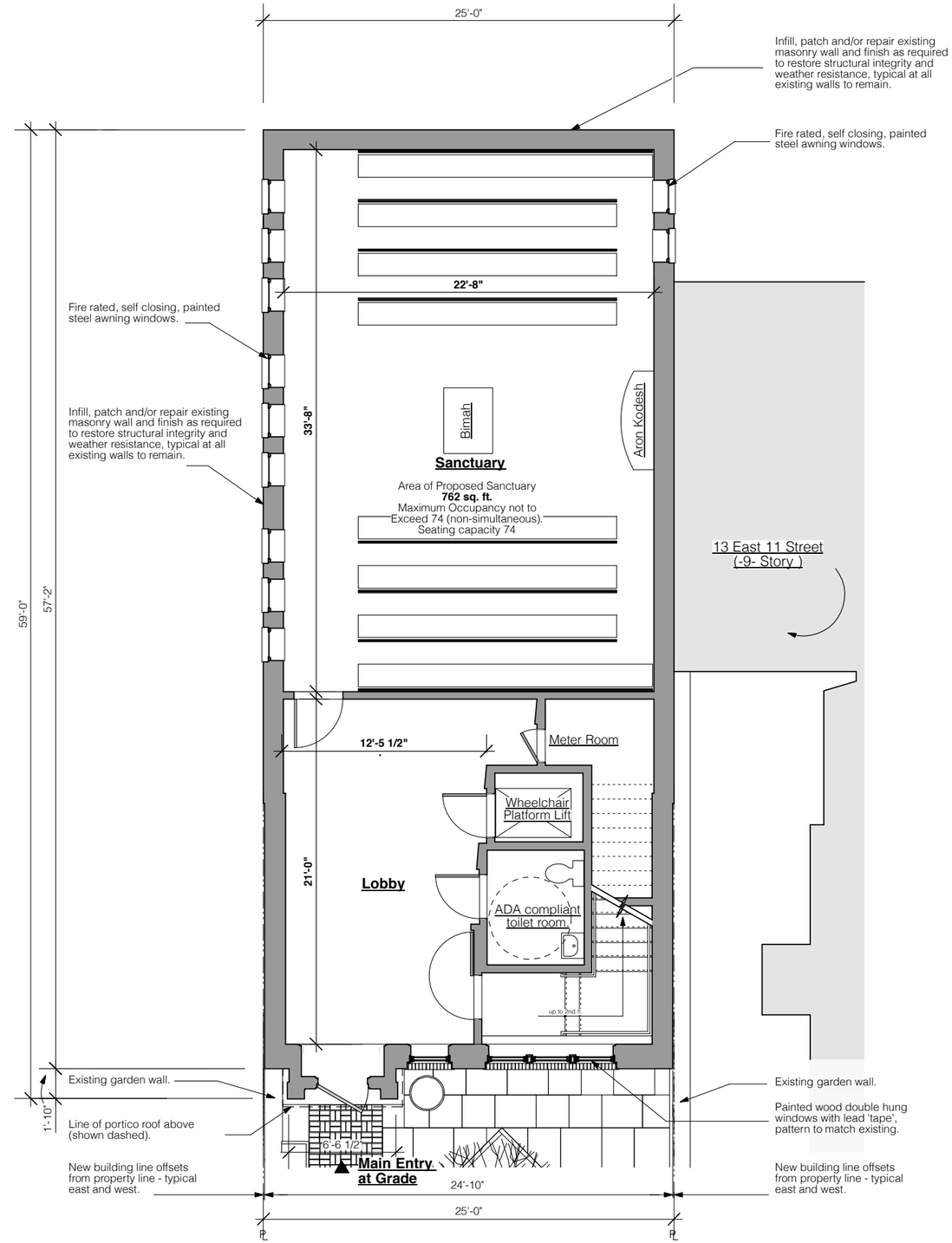

2 Proposed First Floor Plan

0 2 4 6 8 10 FT

N

THE DRAWINGS, SPECIFICATIONS, MODELS, AND OTHER MATERIALS PREPARED BY THE ARCHITECT FOR THIS PROJECT AND THE IDEAS CONTAINED THEREIN ARE INSTRUMENTS OF ARCHITECT'S SERVICE FOR USE SOLELY WITH RESPECT TO THIS PROJECT AND, UNLESS OTHERWISE PROVIDED, THE ARCHITECT SHALL BE DEEMED THE AUTHOR OF THESE MATERIALS AND SHALL RETAIN ALL COMMON LAW, STATUTORY, AND OTHER RESERVED RIGHTS, INCLUDING THE COPY RIGHT.

The Conservative Synagogue of Fifth Avenue
11 East 11 Street
New York . New York . 10003

Jonathan S Kammel, Architect
372 Central Park West . New York, New York
Phone: 917.593.7020
e-mail: jk@jskammel.com

LPC.A.10

Existing and Proposed First Floor Plans

December 18, 2015

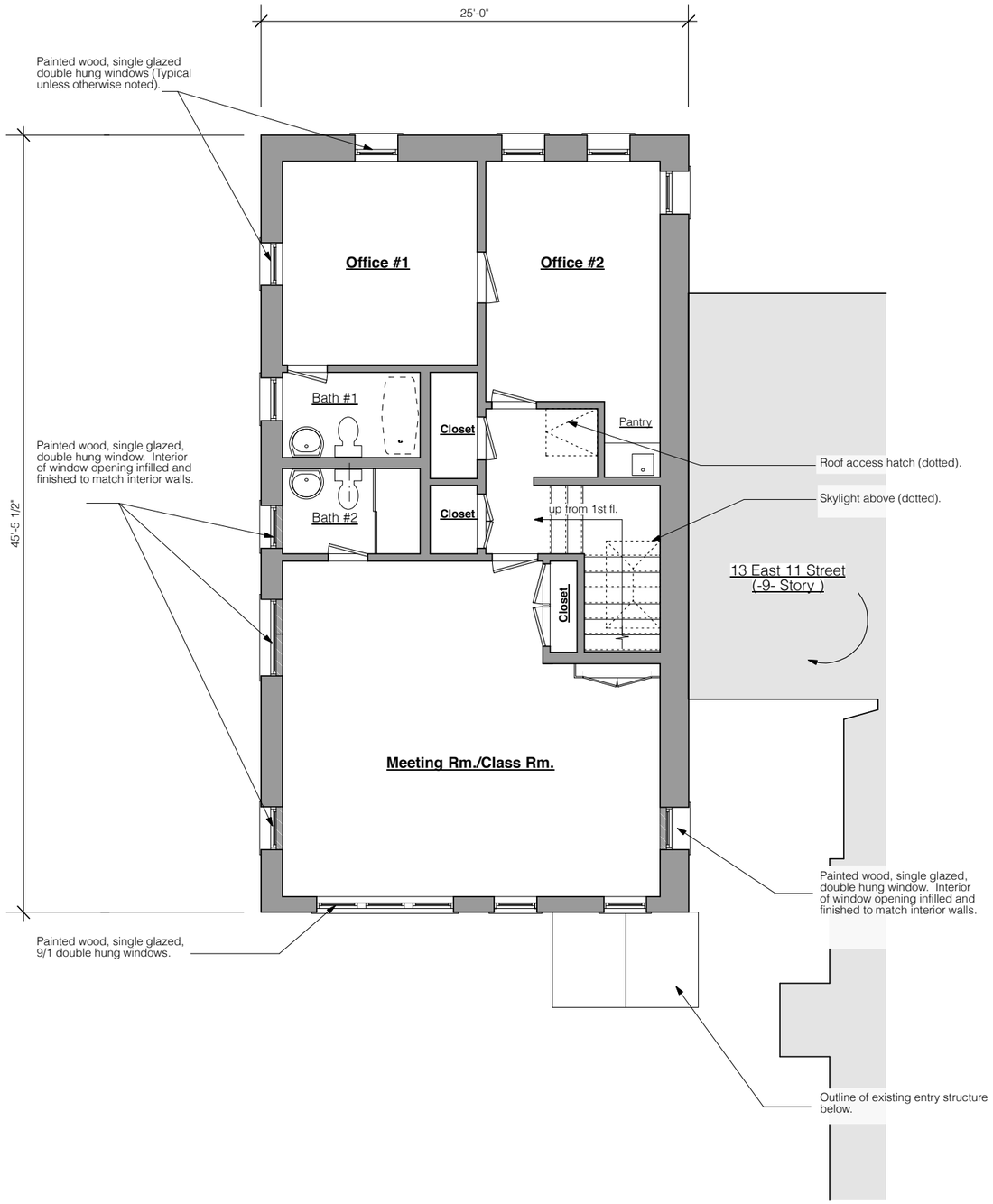

1 Existing Second Floor Plan

0 2 4 6 8 10 FT

N

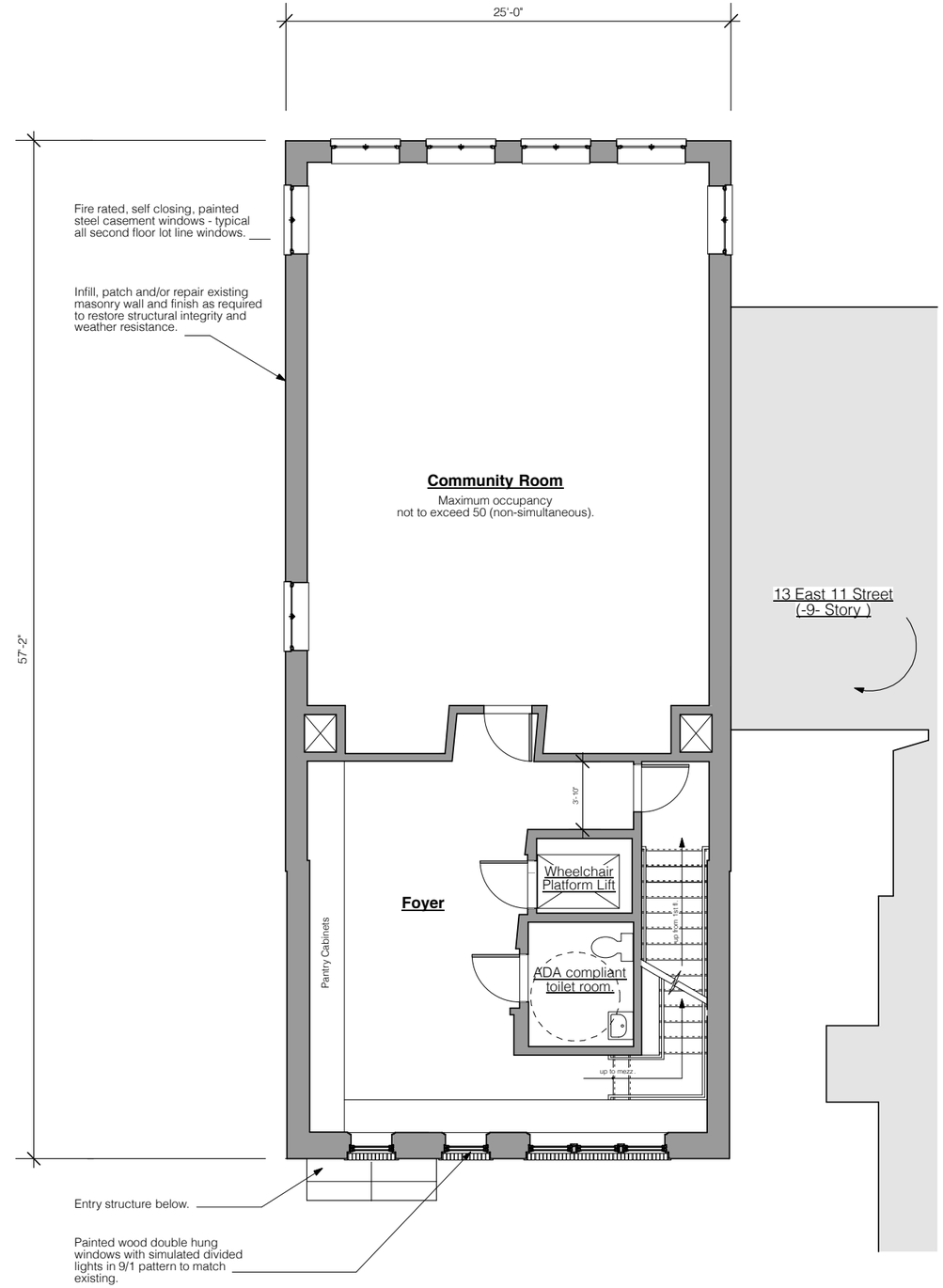

2 Proposed Second Floor Plan

0 2 4 6 8 10 FT

N

THE DRAWINGS, SPECIFICATIONS, MODELS, AND OTHER MATERIALS PREPARED BY THE ARCHITECT FOR THIS PROJECT AND THE IDEAS CONTAINED THEREIN ARE INSTRUMENTS OF ARCHITECT'S SERVICE FOR USE SOLELY WITH RESPECT TO THIS PROJECT AND, UNLESS OTHERWISE PROVIDED, THE ARCHITECT SHALL BE DEEMED THE AUTHOR OF THE DOCUMENTS AND MATERIALS AND RETAINS ALL COMMON LAW, STATUTORY, AND OTHER RESERVED RIGHTS, INCLUDING THE COPYRIGHT.

The Conservative Synagogue of Fifth Avenue
11 East 11 Street
New York . New York . 10003

Jonathan S Kammel, Architect
372 Central Park West . New York, New York
Phone: 917.593.7020
e-mail: jk@jskammel.com

LPC.A.11

Existing and Proposed Second Floor Plans

December 18, 2015

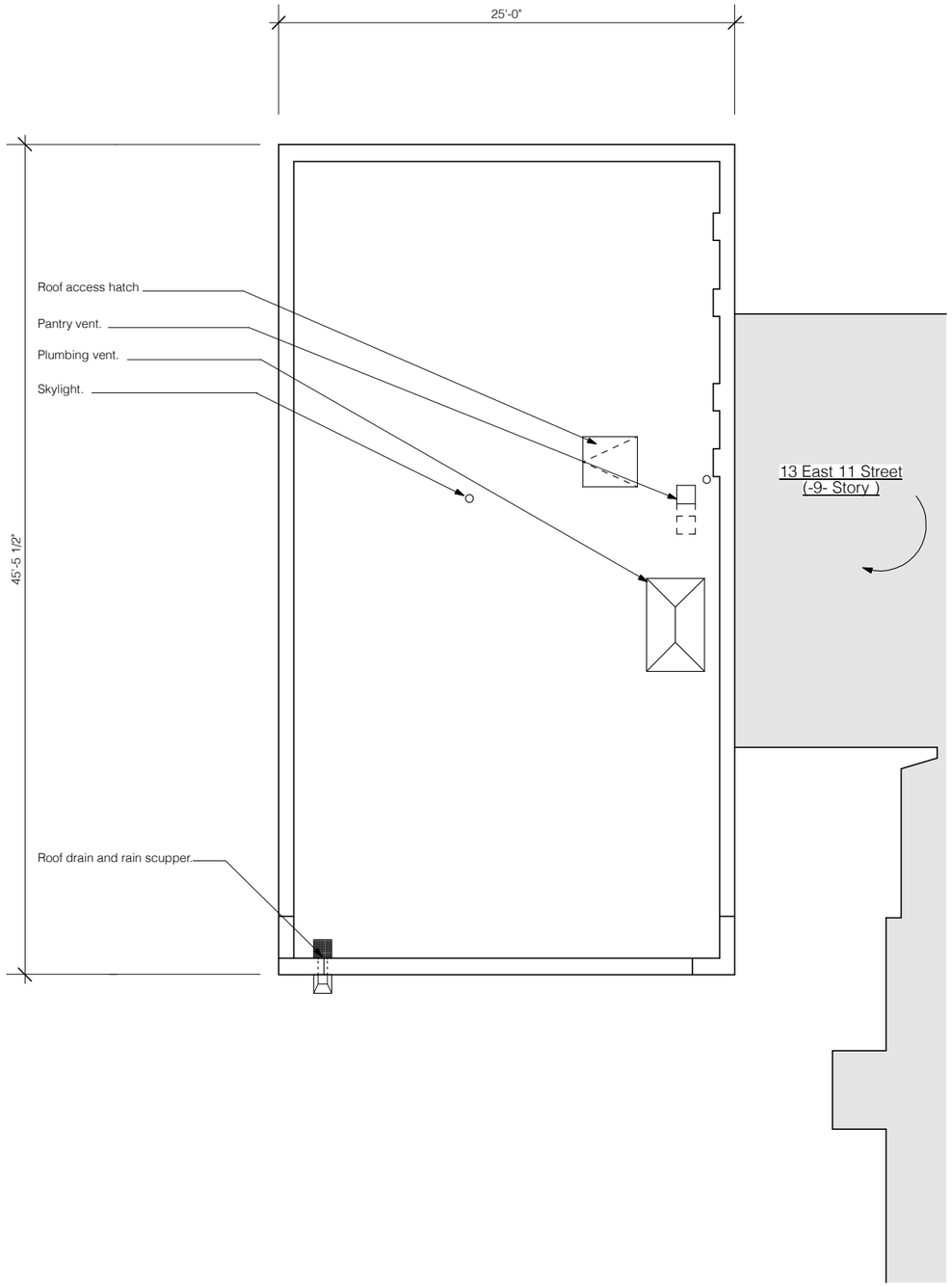

1 Existing Roof Plan

0 2 4 6 8 10 FT

N

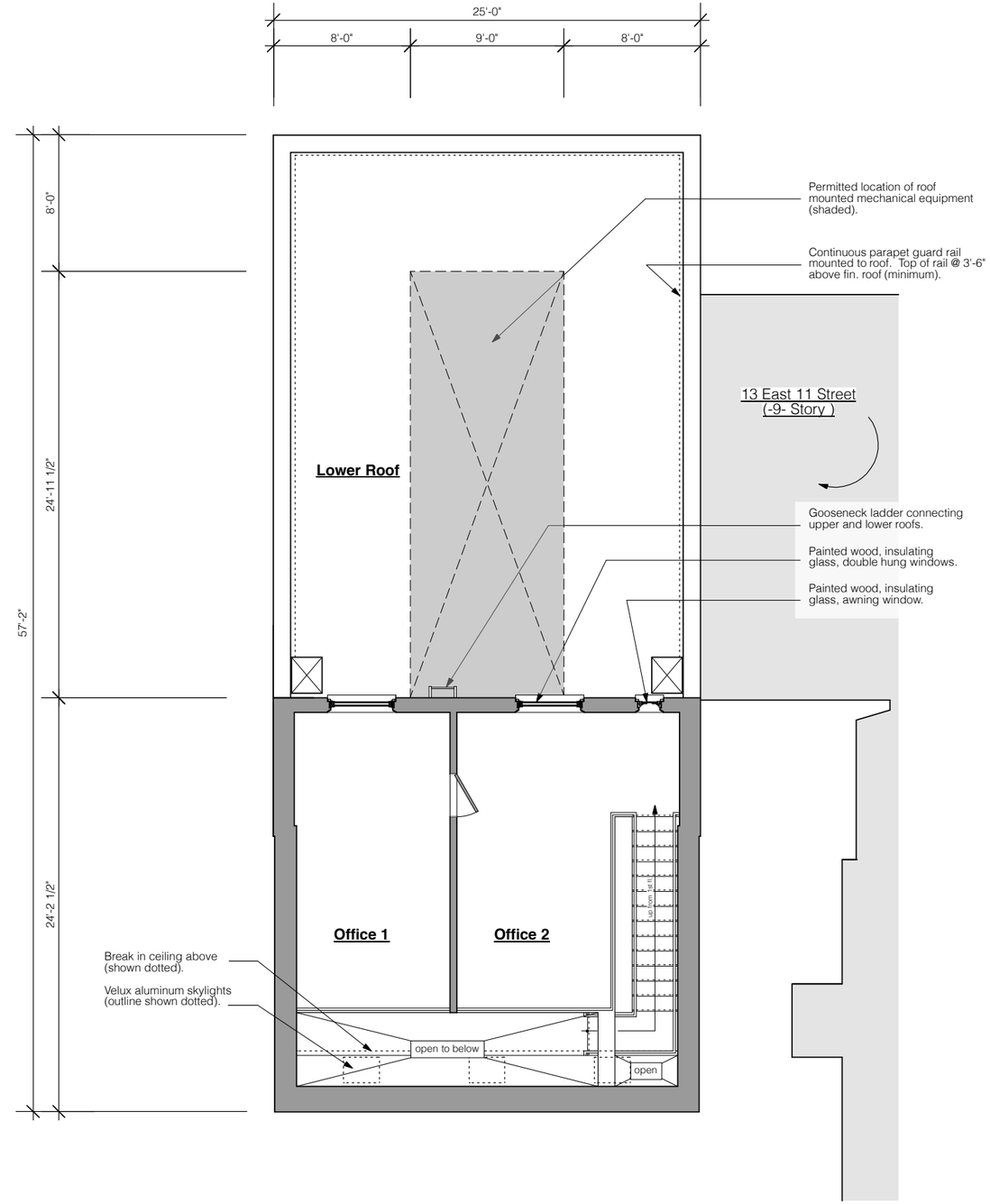

2 Proposed Mezzanine Floor Plan

0 2 4 6 8 10 FT

N

THE DRAWINGS, SPECIFICATIONS, MODELS, AND OTHER MATERIALS PREPARED BY THE ARCHITECT FOR THIS PROJECT AND THE IDEAS CONTAINED THEREIN ARE INSTRUMENTS OF THE ARCHITECT'S SERVICE FOR USE SOLELY WITH RESPECT TO THIS PROJECT AND, UNLESS OTHERWISE PROVIDED, THE ARCHITECT SHALL BE DEEMED THE AUTHOR OF THESE MATERIALS AND SHALL RETAIN ALL COMMON LAW, STATUTORY, AND OTHER RESERVED RIGHTS, INCLUDING THE COPY RIGHT.

The Conservative Synagogue of Fifth Avenue

11 East 11 Street
New York . New York . 10003

Jonathan S Kammel, Architect
372 Central Park West . New York, New York
Phone: 917.593.7020
e-mail: jk@jskammel.com

LPC.A.12

Proposed Mezzanine Plan

December 18, 2015

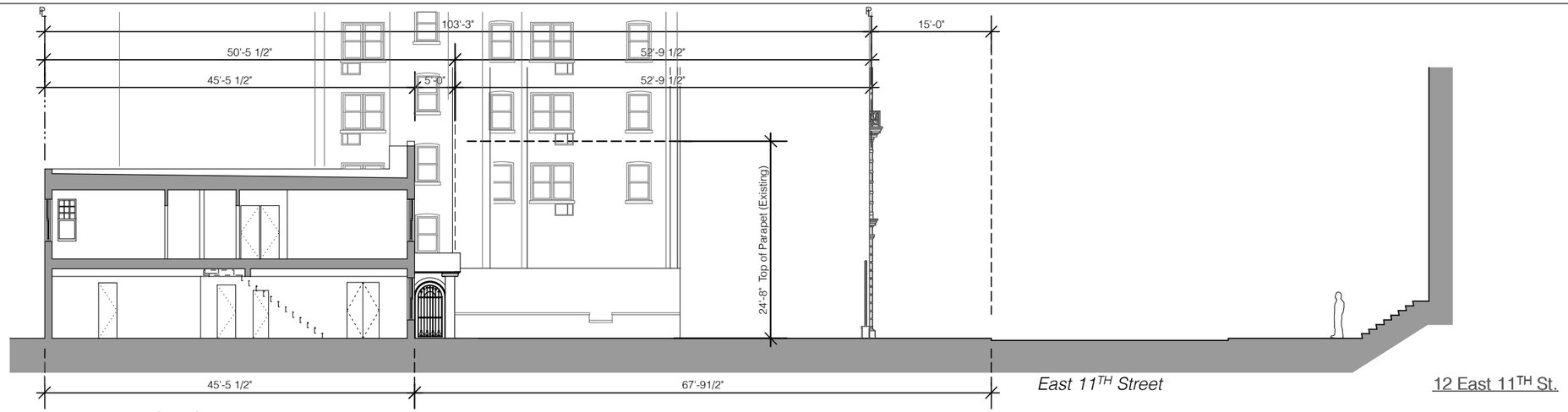

1 Existing Site Section

0 5 10 15 20 FT

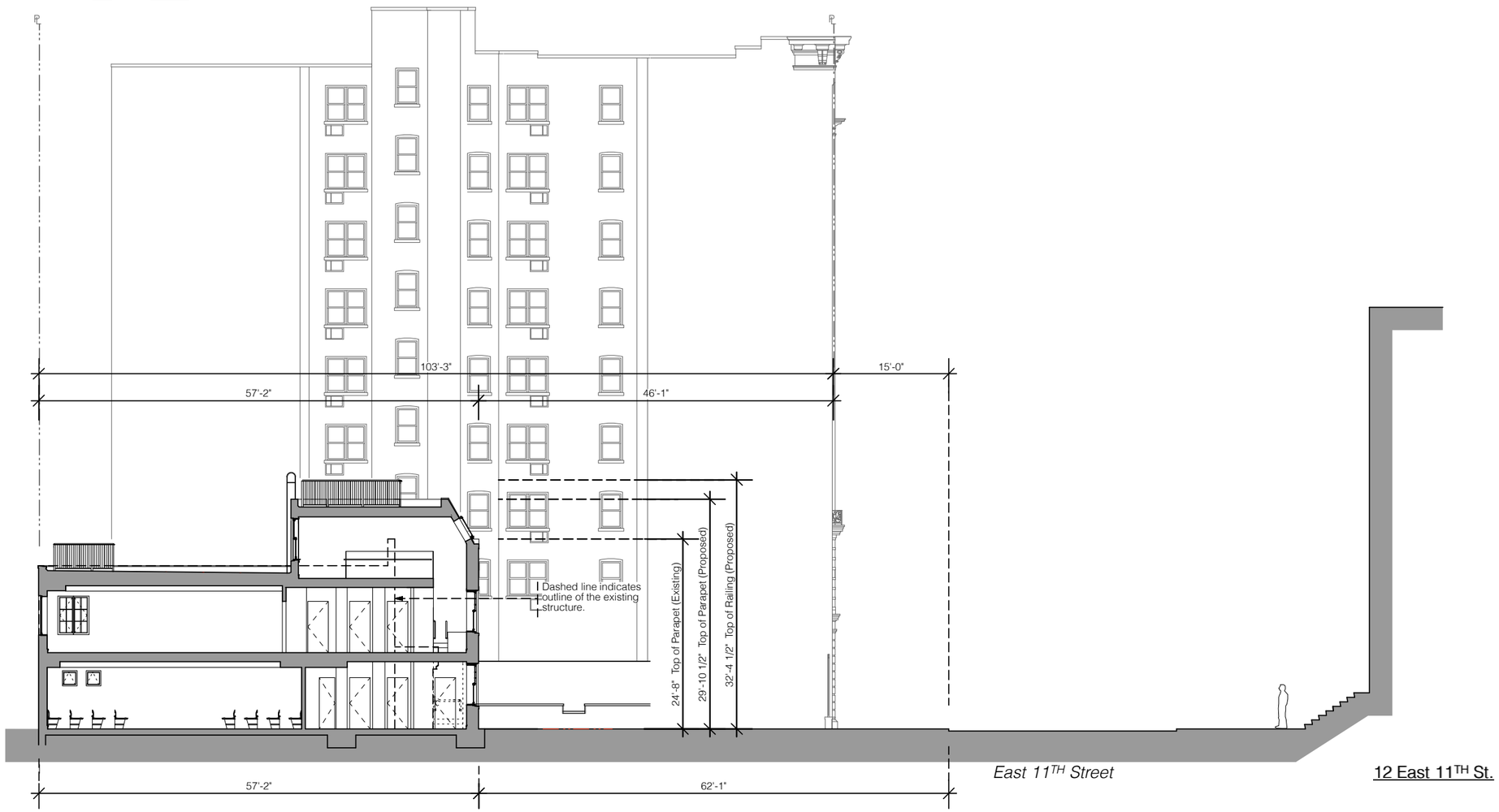

2 Proposed Site Section

0 5 10 15 20 FT

THE DRAWINGS, SPECIFICATIONS, MODELS, AND OTHER MATERIALS PREPARED BY THE ARCHITECT FOR THIS PROJECT AND THE IDEAS CONTAINED THEREIN ARE INSTRUMENTS OF ARCHITECT'S SERVICE FOR USE SOLELY WITH RESPECT TO THIS PROJECT AND, UNLESS OTHERWISE PROVIDED, THE ARCHITECT SHALL BE DEEMED THE AUTHOR OF THESE MATERIALS AND SHALL RETAIN ALL COMMON LAW, STATUTORY, AND OTHER RESERVED RIGHTS, INCLUDING THE COPYRIGHT.

The Conservative Synagogue of Fifth Avenue
11 East 11 Street
New York . New York . 10003

Jonathan S Kammel, Architect
372 Central Park West . New York, New York
Phone: 917.593.7020
e-mail: jk@jskammel.com

LPC.A.13

Site Section

December 18, 2015

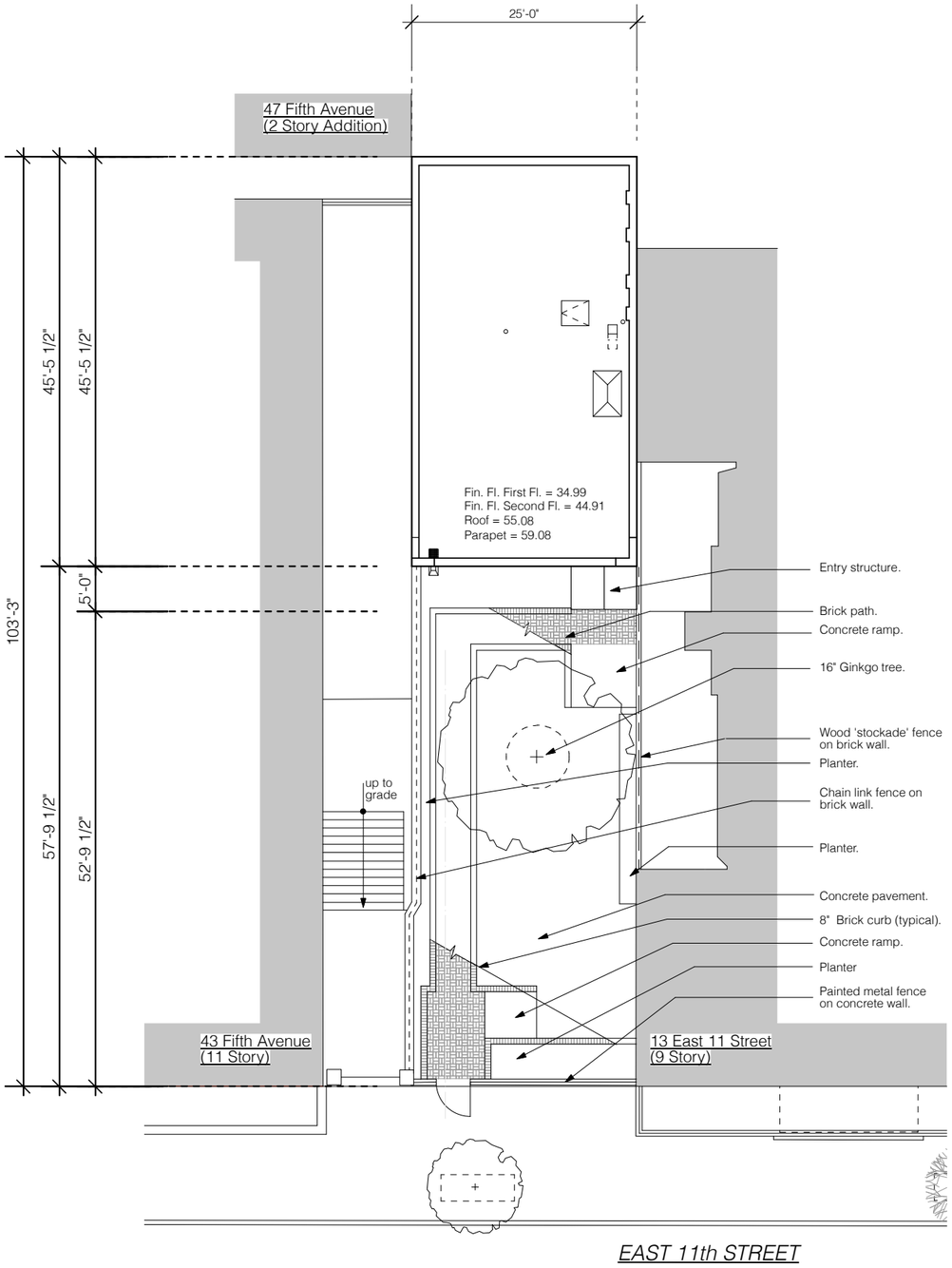

1 Existing Plot Plan and Roof Plan

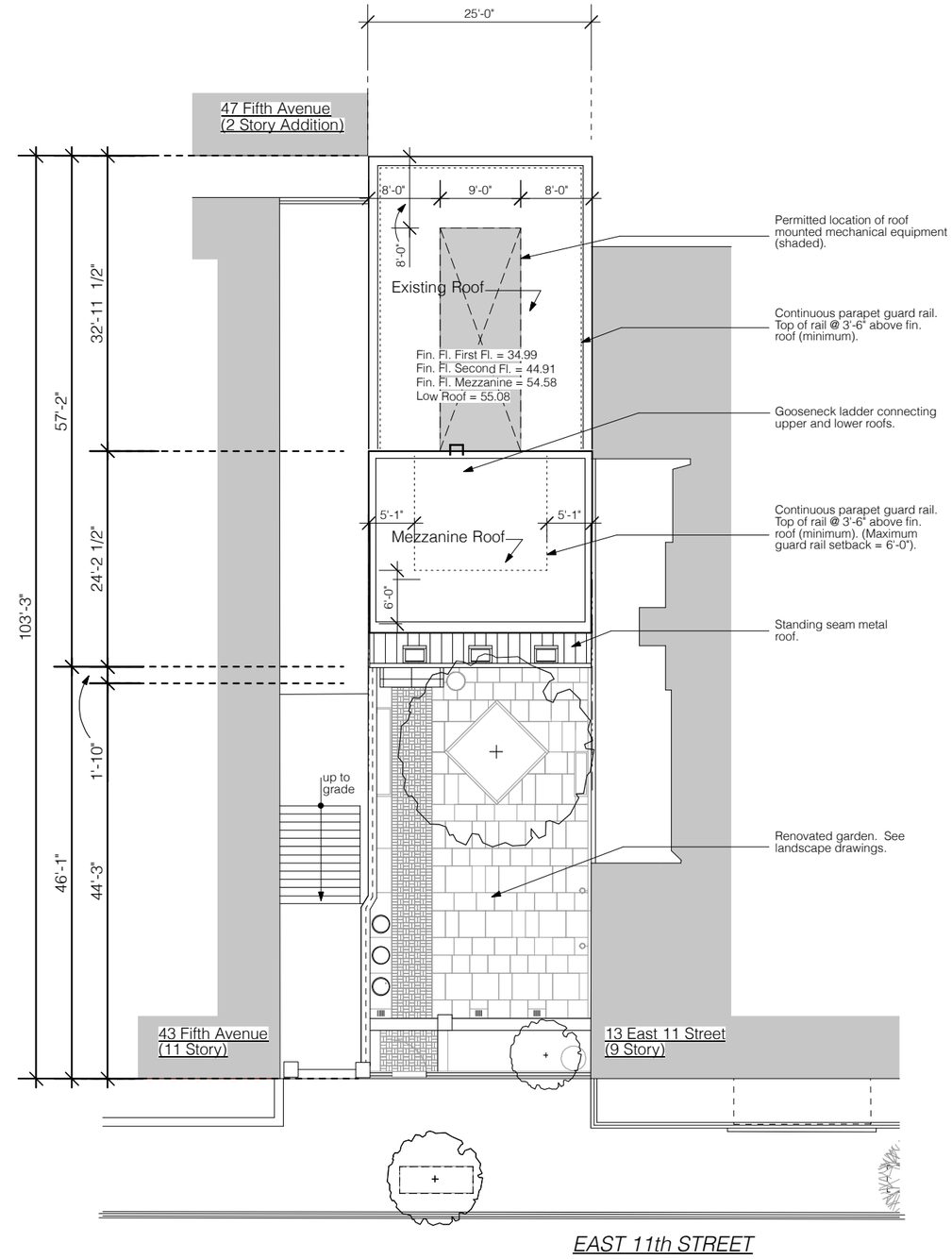

2 Proposed Plot Plan and Roof Plan

THE DRAWINGS, SPECIFICATIONS, MODELS, AND OTHER MATERIALS PREPARED BY THE ARCHITECT FOR THIS PROJECT AND THE IDEAS CONTAINED THEREIN ARE INSTRUMENTS OF ARCHITECT'S SERVICE FOR USE SOLELY WITH RESPECT TO THIS PROJECT AND, UNLESS OTHERWISE PROVIDED, THE ARCHITECT SHALL BE DEEMED THE AUTHOR OF THE MATERIALS AND SHALL RETAIN ALL COMMON LAW, STATUTORY, AND OTHER RESERVED RIGHTS, INCLUDING THE COPY RIGHT.

The Conservative Synagogue of Fifth Avenue
11 East 11 Street
New York . New York . 10003

Jonathan S Kammel, Architect
372 Central Park West . New York, New York
Phone: 917.593.7020
e-mail: jk@jskammel.com

LPC.A.14

Existing and Proposed Plot and Roof Plans

December 18, 2015

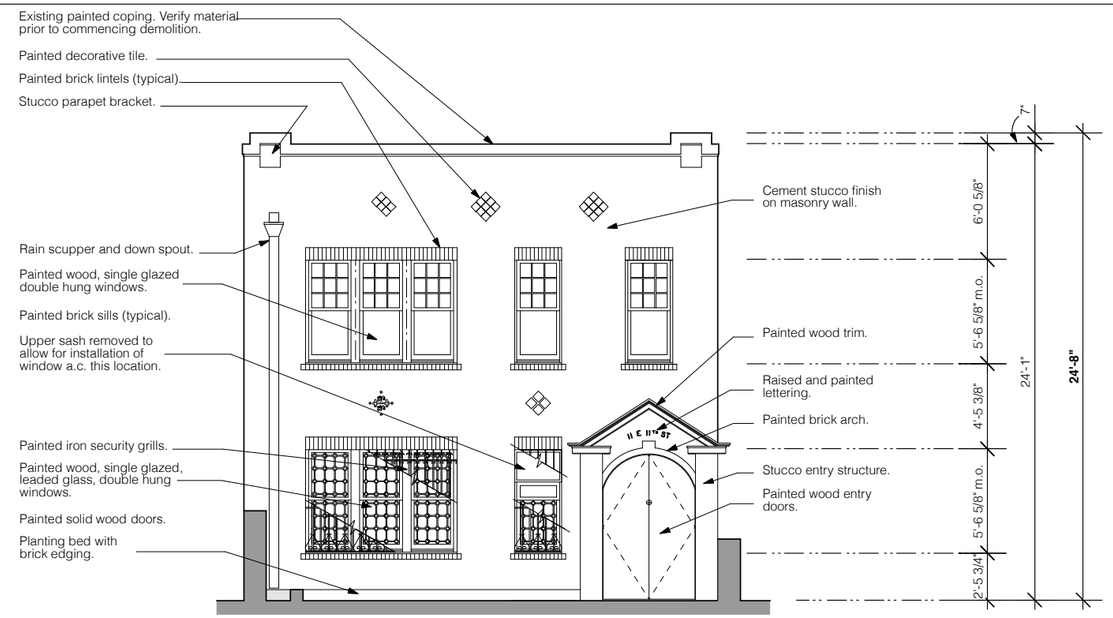

1 Existing South Elevation

0 2 4 6 8 10 FT

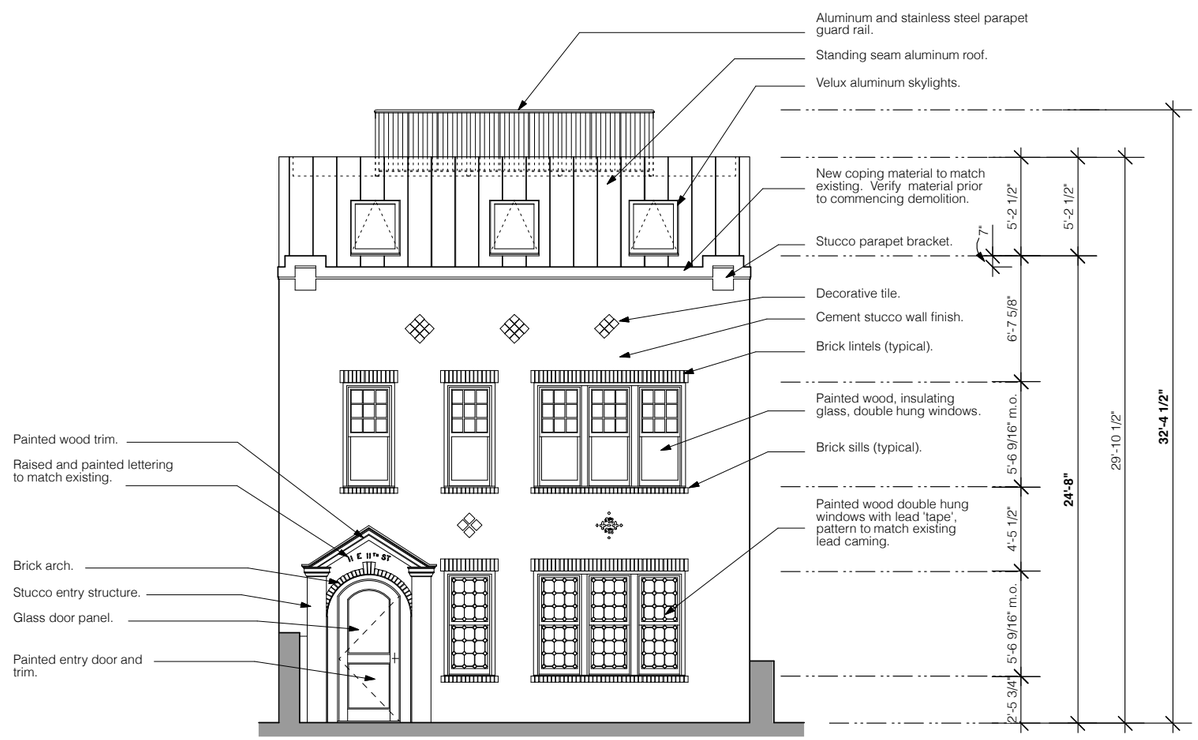

2 Proposed South Elevation

0 2 4 6 8 10 FT

THE DRAWINGS, SPECIFICATIONS, MODELS, AND OTHER MATERIALS PREPARED BY THE ARCHITECT FOR THIS PROJECT AND THE IDEAS CONTAINED THEREIN ARE INSTRUMENTS OF THE ARCHITECT'S SERVICE. THEY ARE NOT TO BE USED BY OTHERS ON THIS PROJECT AND, UNLESS OTHERWISE PROVIDED, THE ARCHITECT SHALL BE DEEMED THE AUTHOR OF THE MATERIALS AND SHALL RETAIN ALL COMMON LAW, STATUTORY, AND OTHER RESERVED RIGHTS, INCLUDING THE COPY RIGHT.

The Conservative Synagogue of Fifth Avenue
11 East 11 Street
New York . New York . 10003

Jonathan S Kammel, Architect
372 Central Park West . New York, New York
Phone: 917.593.7020
e-mail: jk@jskammel.com

LPC.A.15

Existing and Proposed South Elevations

December 18, 2015

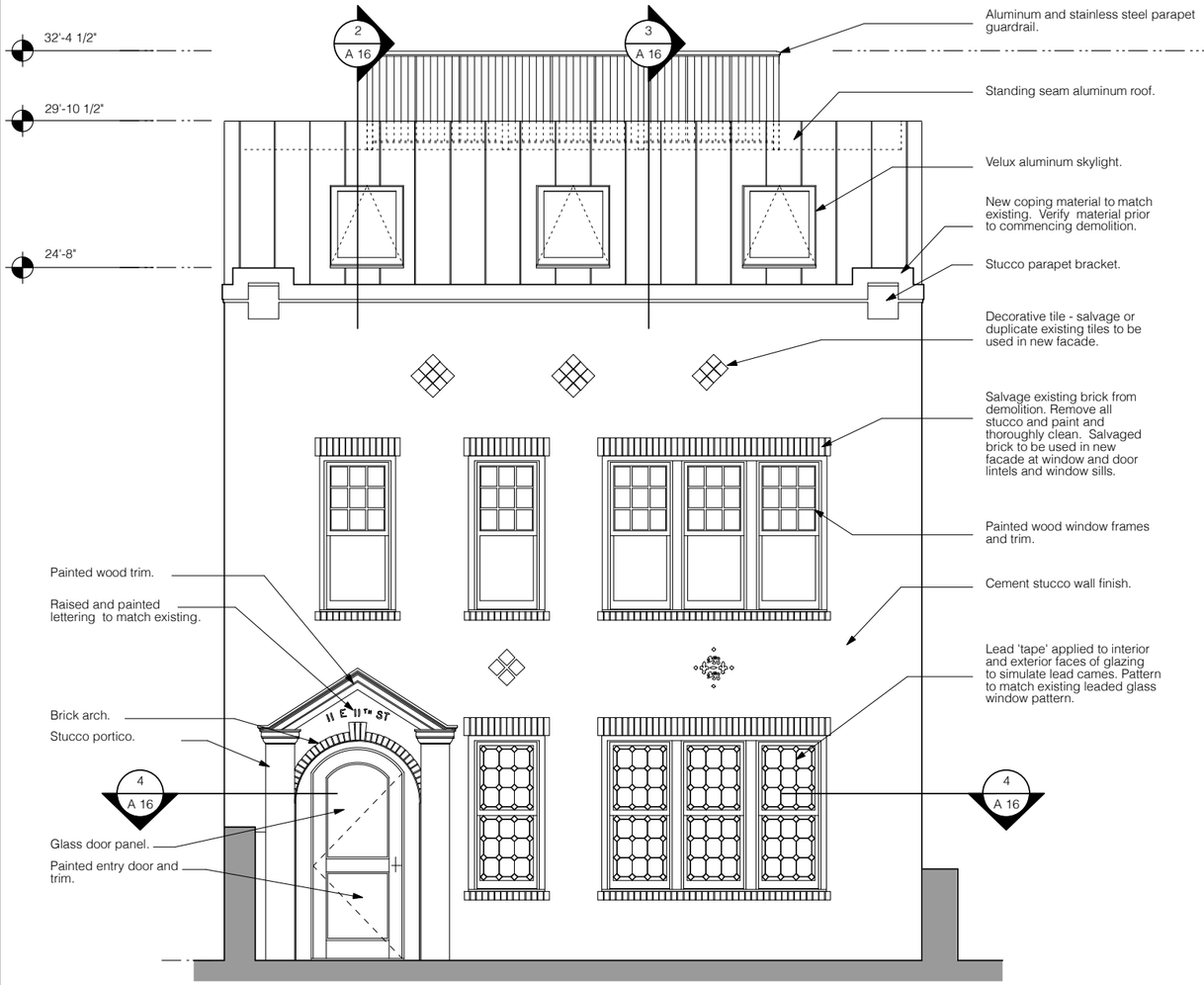

1 Proposed South Elevation

0 2 4 6 8 10 FT

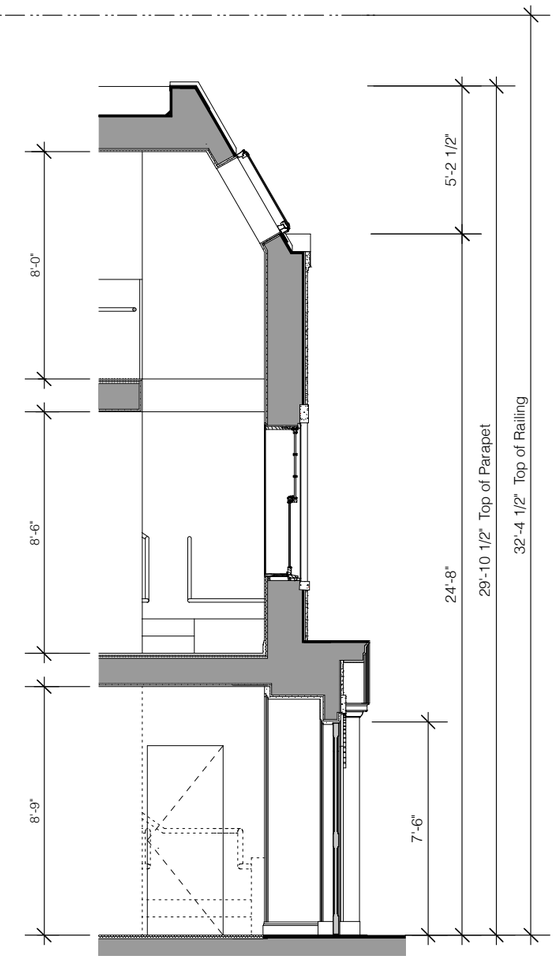

2 Partial Building Section

0 2 4 6 8 10 FT

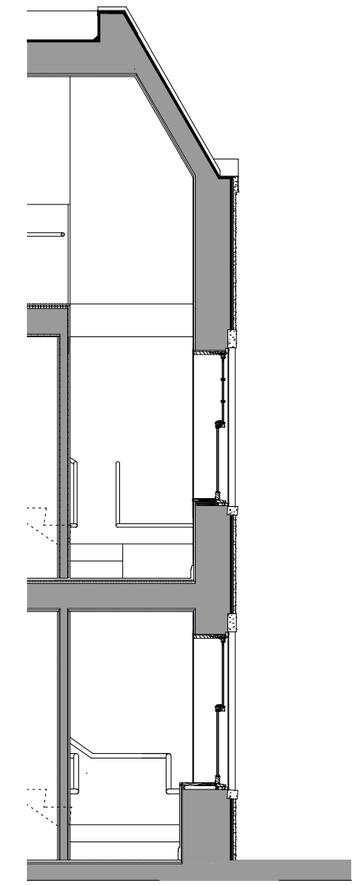

3 Partial Building Section

0 2 4 6 8 10 FT

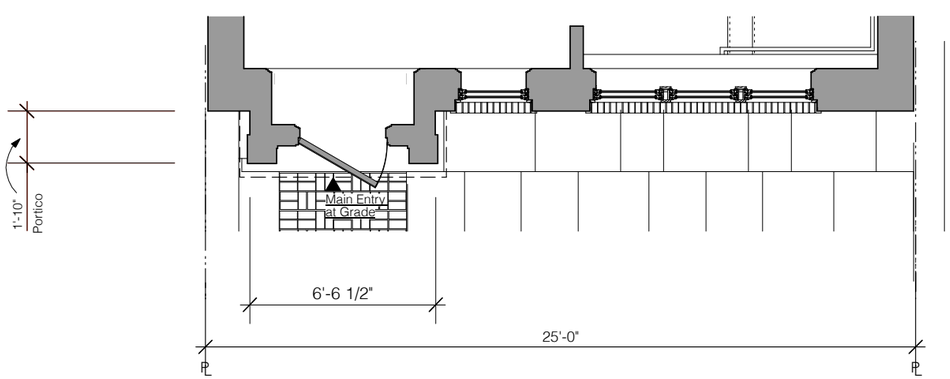

4 Partial Plan Section

0 2 4 6 8 10 FT

THE DRAWINGS, SPECIFICATIONS, MODELS, AND OTHER MATERIALS PREPARED BY THE ARCHITECT FOR THIS PROJECT AND THE IDEAS CONTAINED THEREIN ARE INSTRUMENTS OF ARCHITECTURAL SERVICE. NO USE SHALL BE MADE OF THIS PROJECT AND, UNLESS OTHERWISE PROVIDED, THE ARCHITECT SHALL BE DEEMED THE AUTHOR OF THESE MATERIALS AND SHALL RETAIN ALL COMMON LAW, STATUTORY, AND OTHER RESERVED RIGHTS, INCLUDING THE COPY RIGHT.

The Conservative Synagogue of Fifth Avenue

11 East 11 Street
New York . New York . 10003

Jonathan S Kammel, Architect
372 Central Park West . New York, New York
Phone: 917.593.7020
e-mail: jk@jskammel.com

LPC.A.16

Details

December 18, 2015

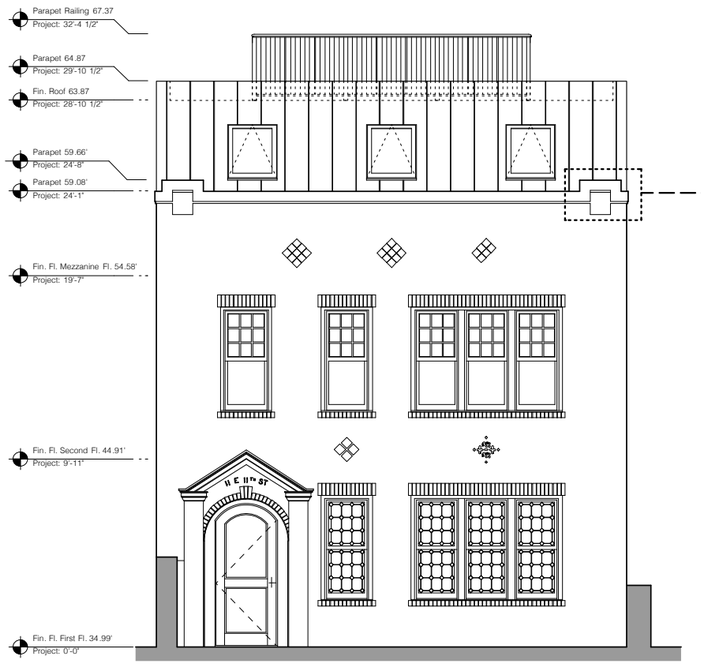

1 Proposed South Elevation

0 2 4 6 8 10 FT

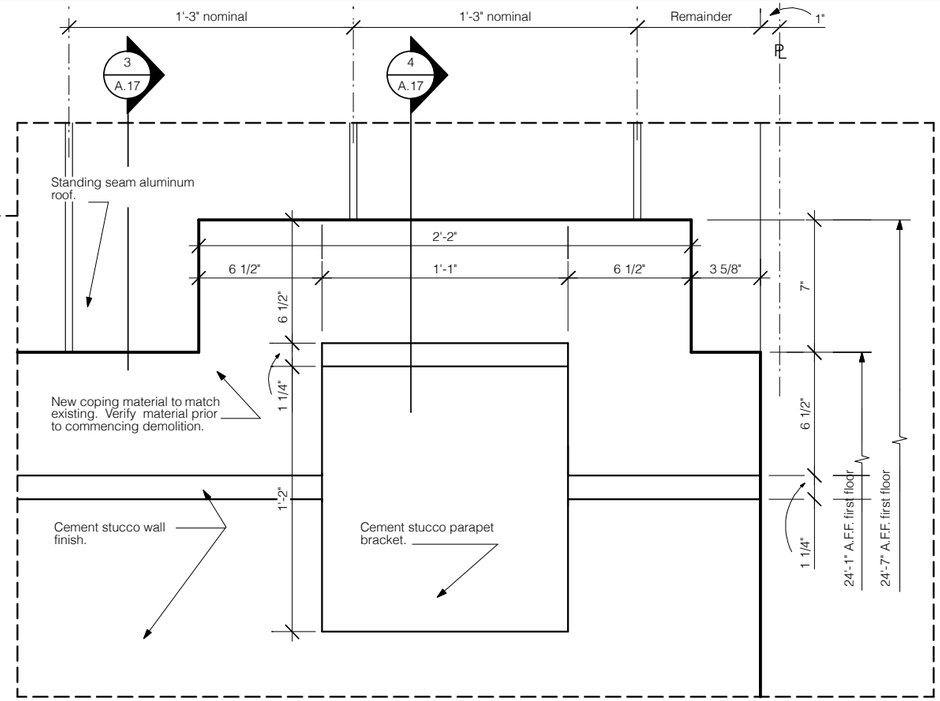

2 Elevation Detail at Parapet Bracket

0 1 1 FT

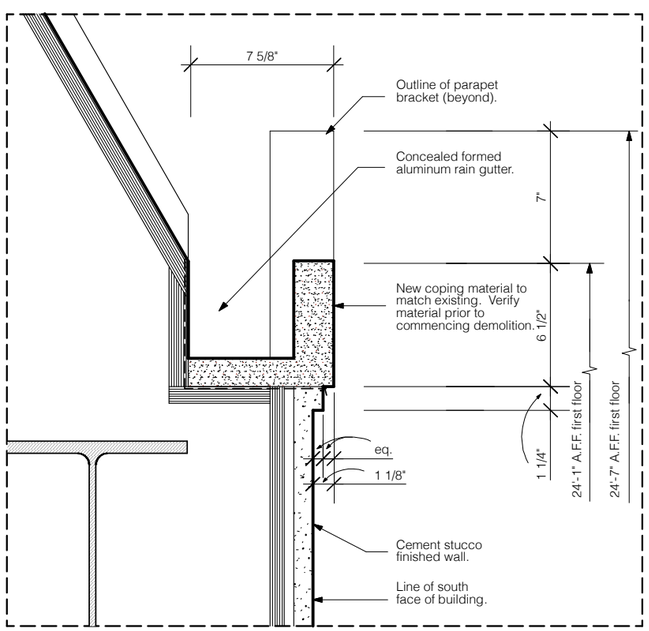

3 Section Detail at Parapet

0 1 1 FT

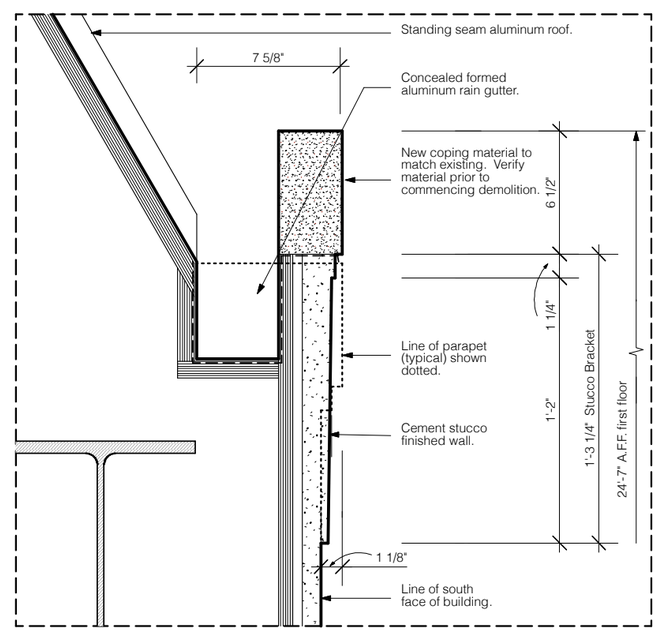

4 Section Detail at Parapet Bracket

0 1 1 FT

THE DRAWINGS, SPECIFICATIONS, MODELS, AND OTHER MATERIALS PREPARED BY THE ARCHITECT FOR THIS PROJECT AND THE IDEAS CONTAINED THEREIN ARE THE SOLE PROPERTY OF THE ARCHITECT. THEY ARE TO BE USED ONLY WITH RESPECT TO THIS PROJECT AND, UNLESS OTHERWISE PROVIDED, THE ARCHITECT SHALL BE DEEMED THE AUTHOR OF THESE MATERIALS AND SHALL RETAIN ALL COMMON LAW, STATUTORY, AND OTHER RESERVED RIGHTS, INCLUDING THE COPYRIGHT.

The Conservative Synagogue of Fifth Avenue
11 East 11 Street
New York . New York . 10003

Jonathan S Kammel, Architect
372 Central Park West . New York, New York
Phone: 917.593.7020
e-mail: jk@jskammel.com

LPC.A.17

Parapet Bracket Details

December 18, 2015

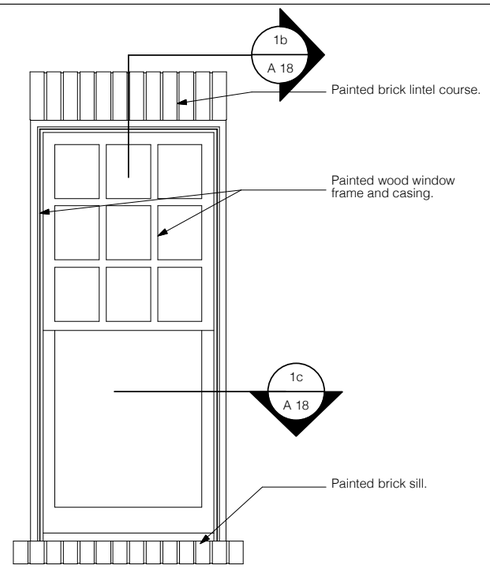

1a Elevation Typical Second Floor 9/1

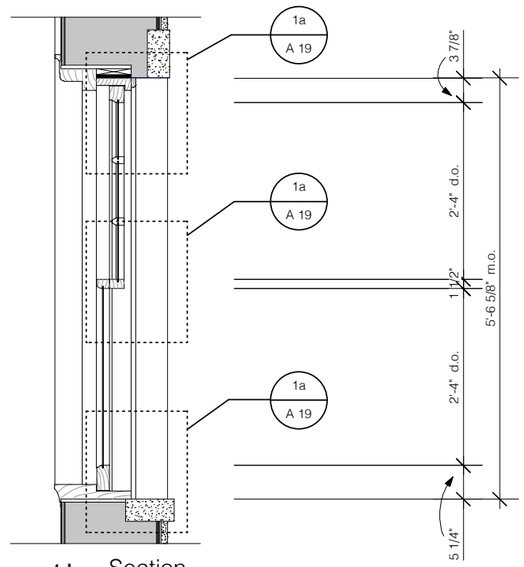

1b Section

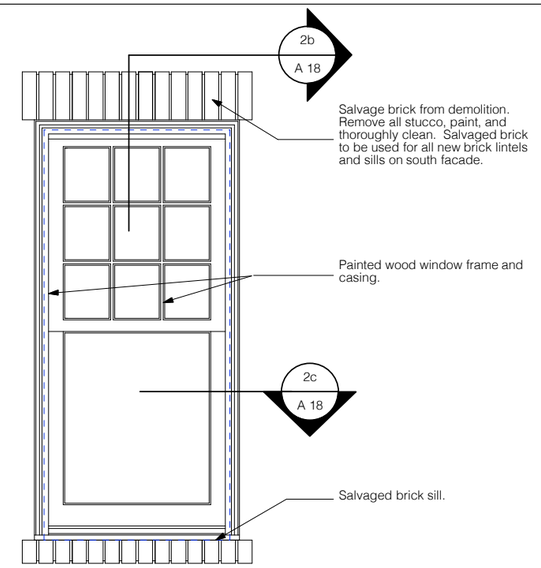

2a Elevation Typical First Floor 9/1

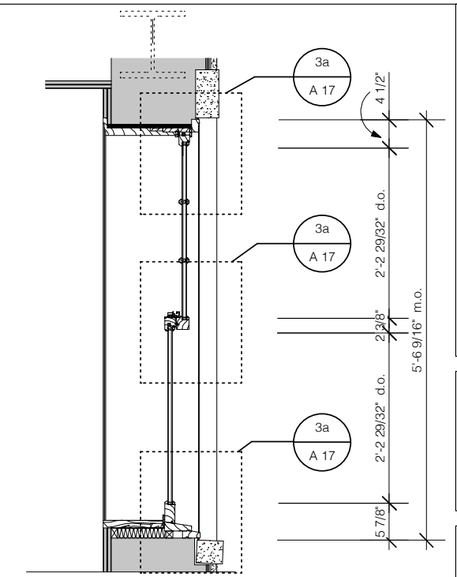

2b Section

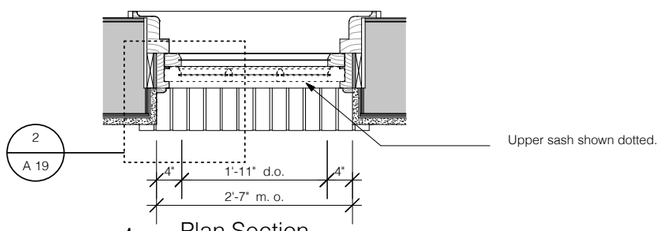

1c Plan Section

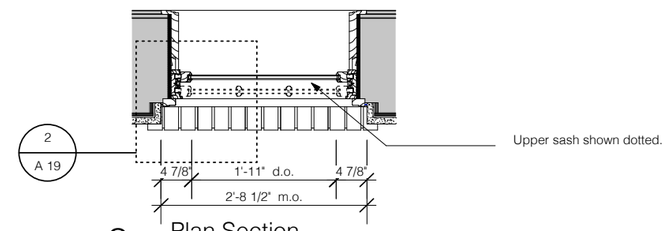

2c Plan Section

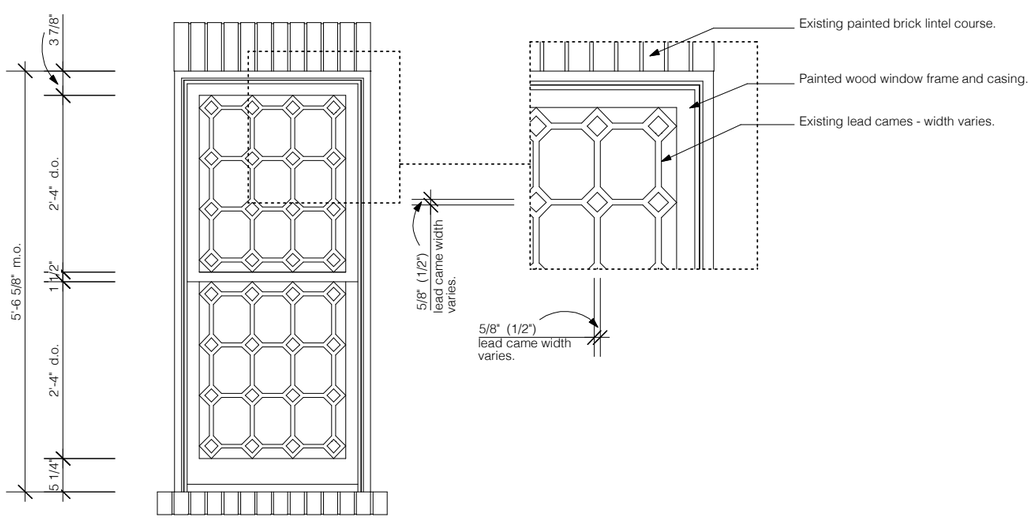

1d Elevation Tyipcal First Floor Leaded Glass

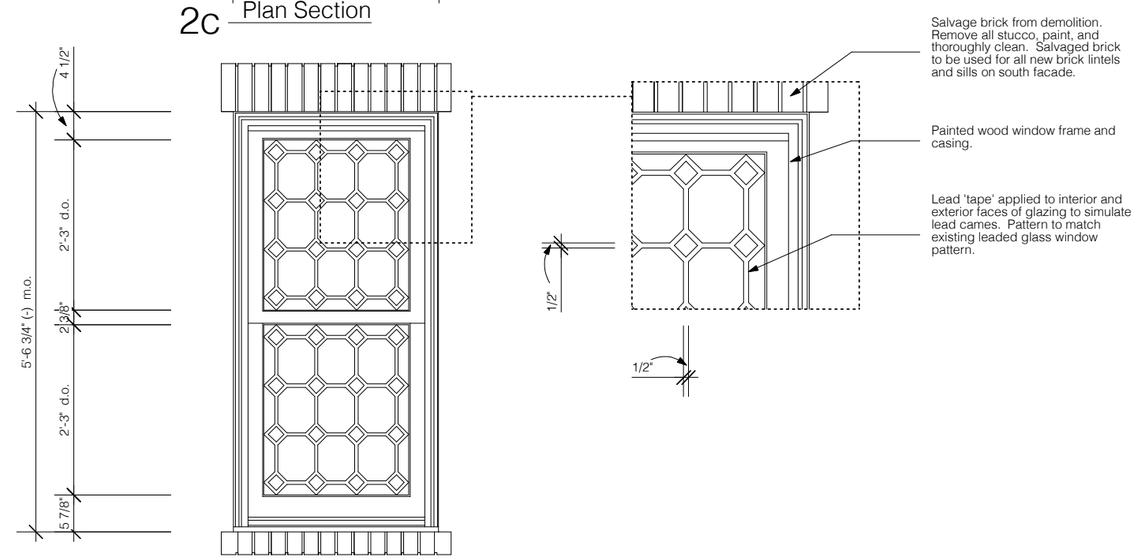

2d Elevation Typical First Floor Leaded Glass

1 Existing Painted Wood Double Hung Windows

0 1 2 3 FT

2 Proposed Painted Wood Double Hung Windows

0 1 2 3 FT

THE DRAWINGS, SPECIFICATIONS, MODELS, AND OTHER MATERIALS PREPARED BY THE ARCHITECT FOR THIS PROJECT AND THE IDEAS CONTAINED THEREIN ARE INSTRUMENTS OF ARCHITECTURAL SERVICE. REPRODUCTION, USE OR DISCLOSURE IN RESPECT TO THIS PROJECT AND, UNLESS OTHERWISE PROVIDED, THE ARCHITECT SHALL BE DEEMED THE AUTHOR OF THESE MATERIALS AND SHALL RETAIN ALL COMMON LAW, STATUTORY, AND OTHER RESERVED RIGHTS, INCLUDING THE COPYRIGHT.

The Conservative Synagogue of Fifth Avenue

11 East 11 Street
New York . New York . 10003

Jonathan S Kammel, Architect
372 Central Park West . New York, New York
Phone: 917.593.7020
e-mail: jk@jskammel.com

LPC.A.18

Fenestration
South Elevation

December 18, 2015

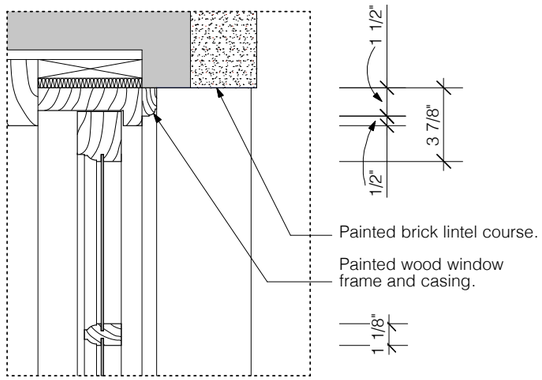

1a Head

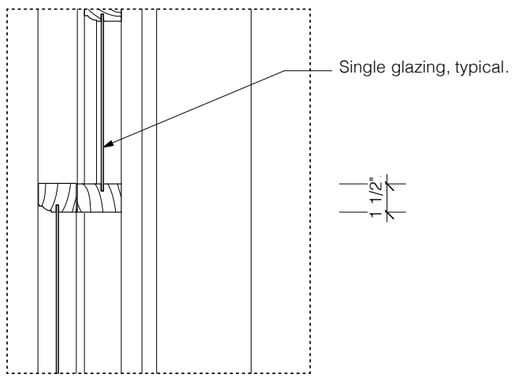

1b Meeting Rail

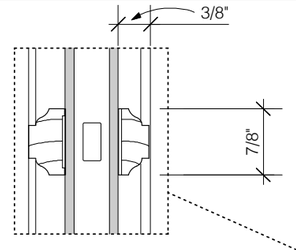

Painted Wood Muntin:
Typical Second Floor Windows.

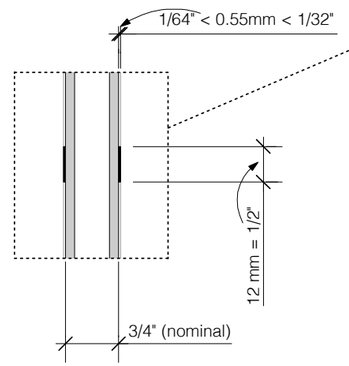

Alternate: Simulated Lead Cames
Typical First Floor Windows.

Note: Existing first floor and second floor double hung windows are similar, except that first floor windows are leaded, and second floor windows are 9/1 true divided lites. Existing windows are single glazed.

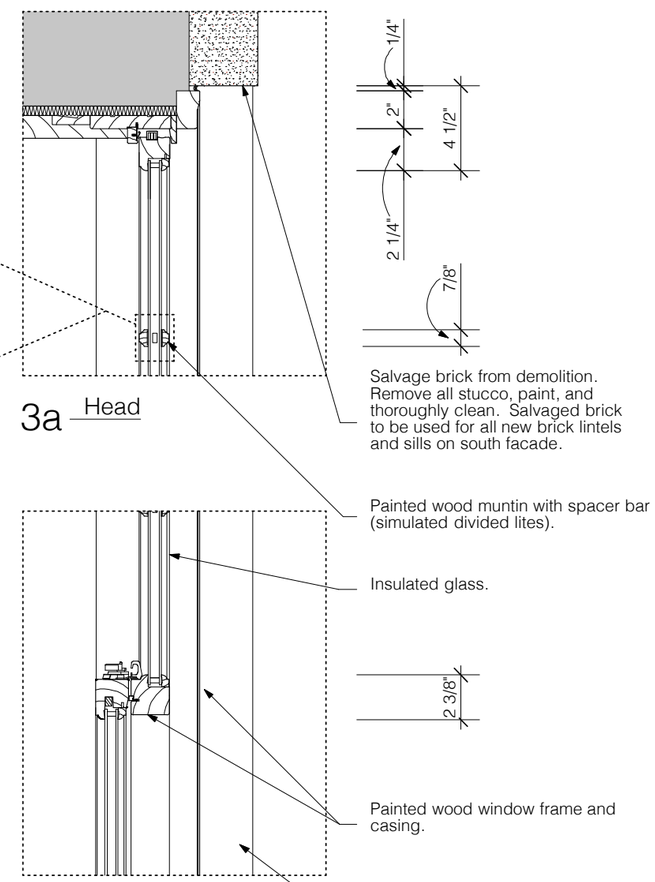

3a Head

3b Meeting Rail

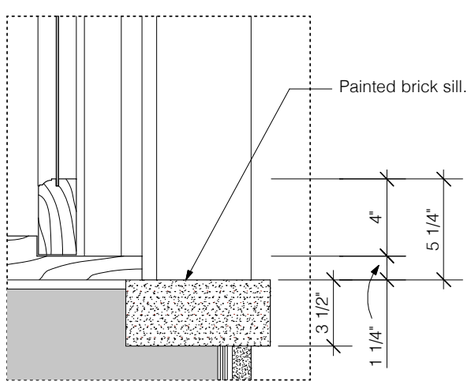

1c Sill

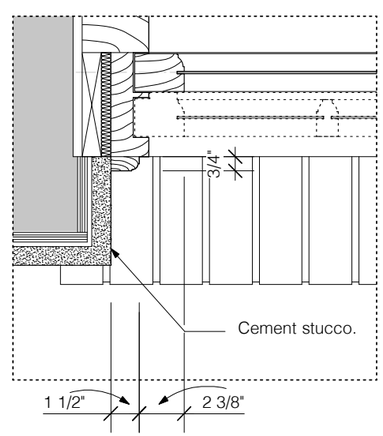

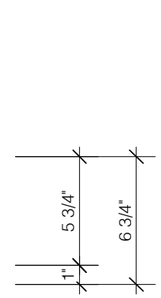

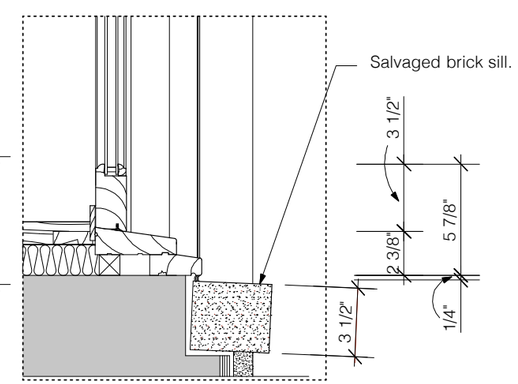

3c Sill

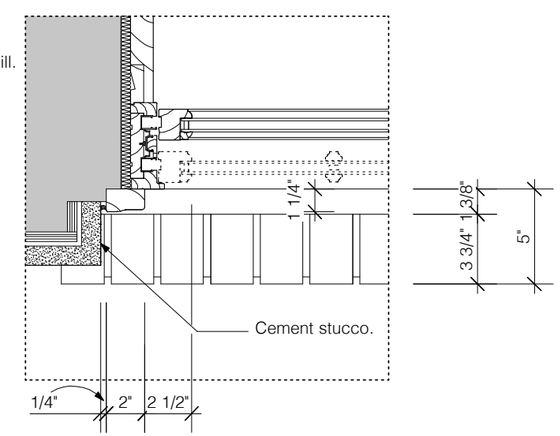

1 Existing Double Hung Wood Window Section Details

2 Existing Double Hung Wood Window Jamb Detail

3 Proposed Double Hung Wood Window Section Details

4 Proposed Double Hung Wood Window Plan Detail

0 6 12 IN

Note:

Existing first floor and second floor double hung windows are similar, except that first floor windows are leaded, and second floor windows are 9/1 true divided lites. Existing windows are single glazed.

Proposed first floor and second floor double hung windows shall be similar except as follows:

1. Proposed first floor windows shall have leaded glass pattern similar to the existing first floor windows. Glass patterns shall be achieved using lead "tape" on interior and exterior glass surfaces to create simulated divided lites.

2. Proposed second floor windows shall have 9/1 glazing pattern similar to the existing second floor windows. Glass patterns shall be achieved using painted wood muntins on interior and exterior glass surfaces with spacer bars to create simulated divided lites.

All windows shall be glazed using double pane insulating glass.

THE DRAWINGS, SPECIFICATIONS, MODELS, AND OTHER MATERIALS PREPARED BY THE ARCHITECT FOR THIS PROJECT AND THE IDEAS CONTAINED THEREIN ARE INSTRUMENTS OF THE ARCHITECT'S SERVICE FOR USE SOLELY WITH RESPECT TO THIS PROJECT AND, UNLESS OTHERWISE PROVIDED, THE ARCHITECT SHALL BE DEEMED THE AUTHOR OF AND OWNER OF ALL ORIGINAL RIGHTS UNDER COMMON LAW, STATUTORY, AND OTHER RESERVED RIGHTS, INCLUDING THE COPYRIGHT.

The Conservative Synagogue of Fifth Avenue
11 East 11 Street
New York . New York . 10003

Jonathan S Kammel, Architect
372 Central Park West . New York, New York
Phone: 917.593.7020
e-mail: jk@jskammel.com

LPC.A.19

Fenestration Details
South Elevation

December 18, 2015

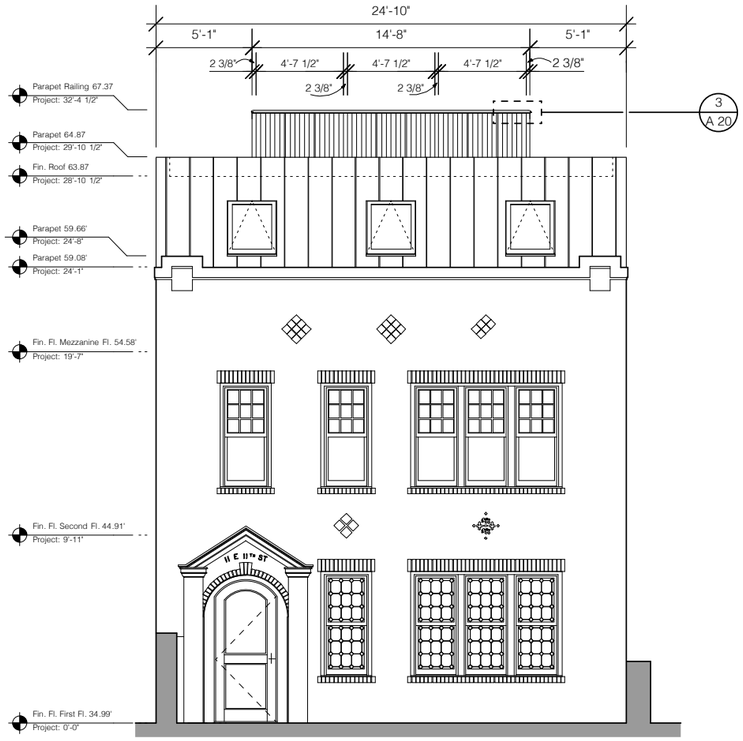

1 Proposed South Elevation

0 2 4 6 8 10 FT

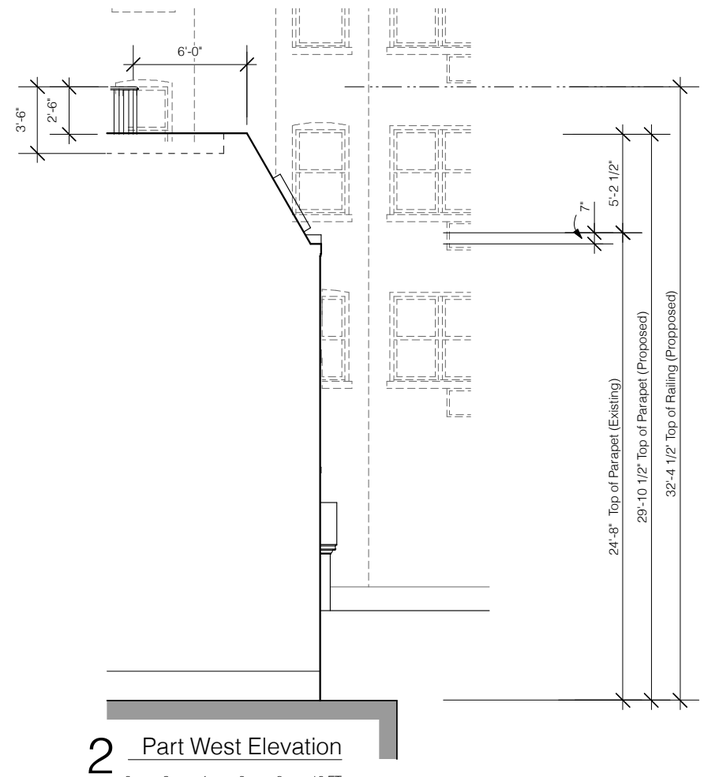

2 Part West Elevation

0 2 4 6 8 10 FT

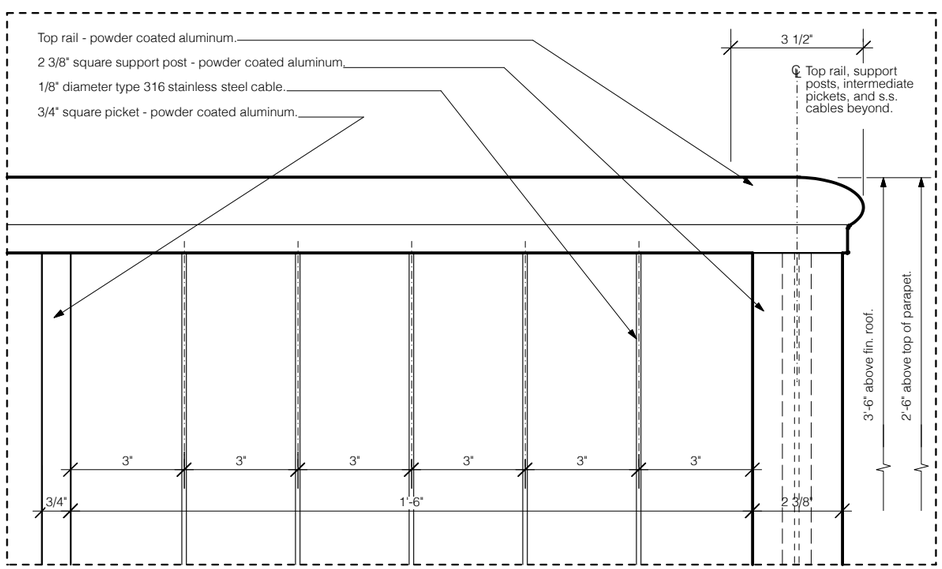

3 Parapet Rail Elevation Detail

0 6 IN

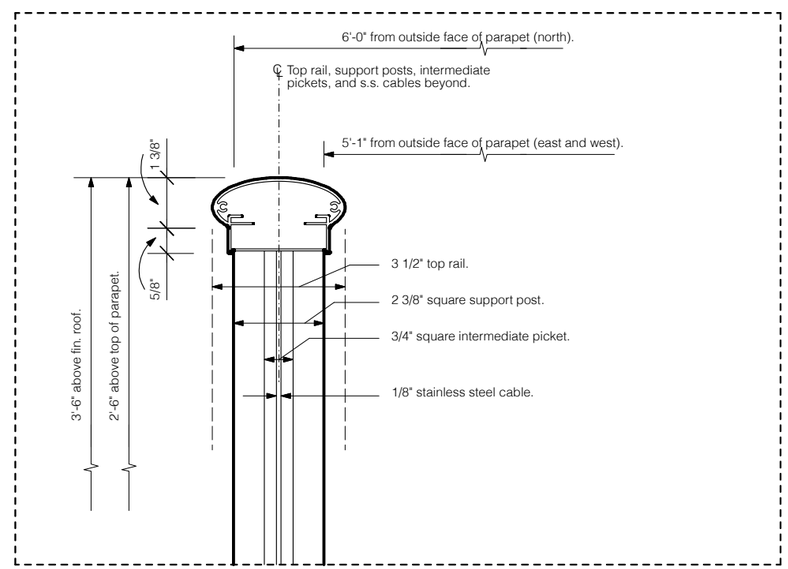

4 Parapet Rail Section Detail

0 6 IN

THE DRAWINGS, SPECIFICATIONS, MODELS, AND OTHER MATERIALS PREPARED BY THE ARCHITECT FOR THIS PROJECT AND THE IDEAS CONTAINED THEREIN ARE INSTRUMENTS OF THE ARCHITECT'S SERVICE FOR USE SOLELY WITH RESPECT TO THIS PROJECT AND, UNLESS OTHERWISE PROVIDED, THE ARCHITECT SHALL BE DEEMED THE AUTHOR OF THESE MATERIALS AND SHALL RETAIN ALL COMMON LAW, STATUTORY, AND OTHER RESERVED RIGHTS, INCLUDING THE COPY RIGHT.

The Conservative Synagogue of Fifth Avenue

11 East 11 Street
New York . New York . 10003

Jonathan S Kammel, Architect
372 Central Park West . New York, New York
Phone: 917.593.7020
e-mail: jk@jskammel.com

LPC.A.20

Parapet Guardrail Details

December 18, 2015

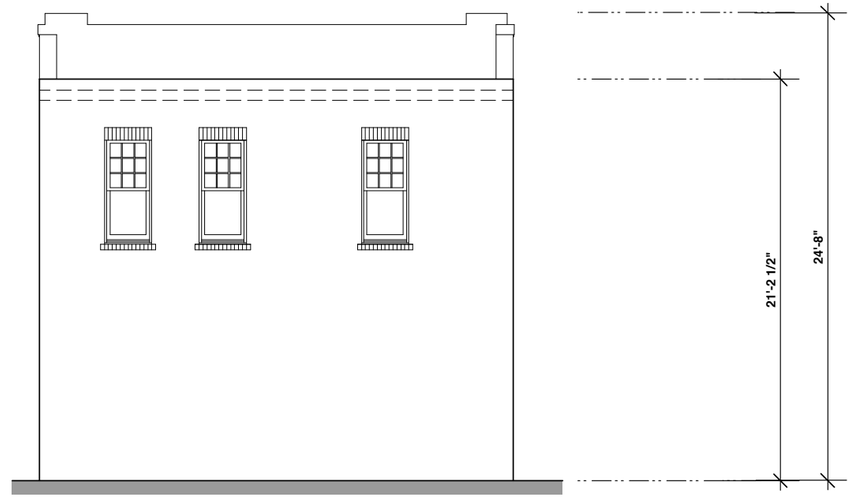

1 Existing North Elevation

0 2 4 6 8 10 FT

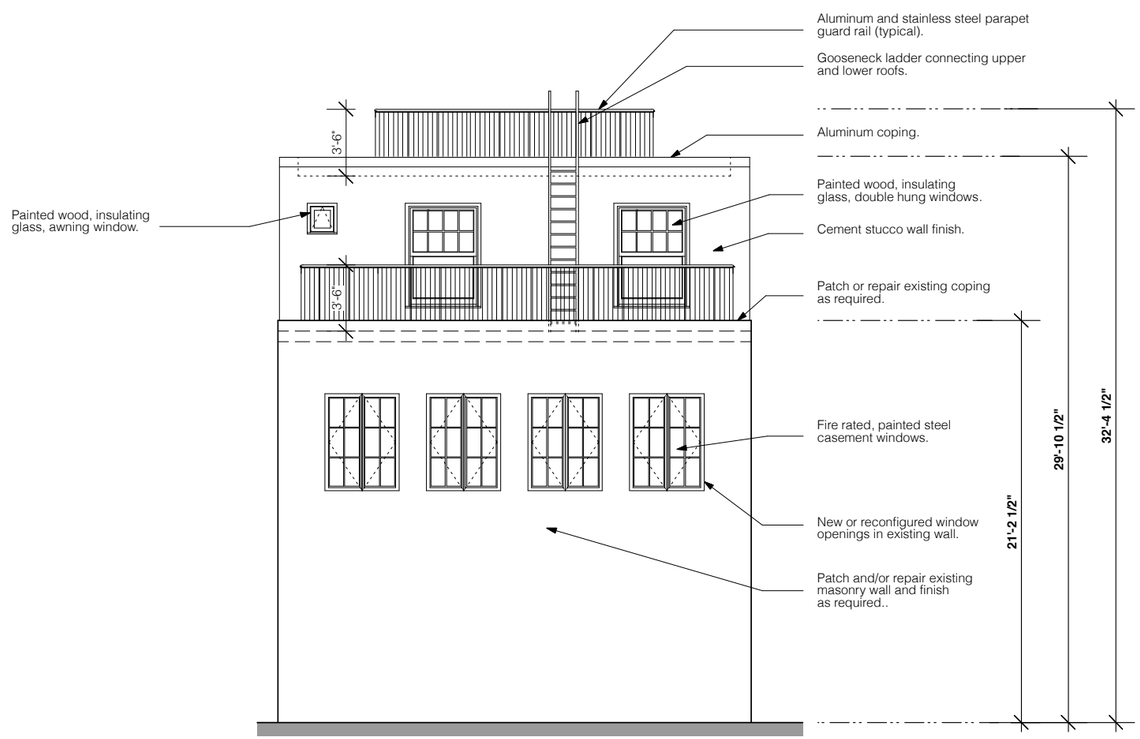

2 Proposed North Elevation

0 2 4 6 8 10 FT

THE DRAWINGS, SPECIFICATIONS, MODELS, AND OTHER MATERIALS PREPARED BY THE ARCHITECT FOR THIS PROJECT AND THE IDEAS CONTAINED THEREIN ARE INSTRUMENTS OF THE ARCHITECT'S SERVICE. REPRODUCTION OR USE OF THIS PROJECT AND UNLESS OTHERWISE PROVIDED, THE ARCHITECT SHALL BE DEEMED THE AUTHOR OF THESE MATERIALS AND SHALL RETAIN ALL COMMON LAW, STATUTORY, AND OTHER RESERVED RIGHTS, INCLUDING THE COPY RIGHT.

The Conservative Synagogue of Fifth Avenue
11 East 11 Street
New York . New York . 10003

Jonathan S Kammel, Architect
372 Central Park West . New York, New York
Phone: 917.593.7020
e-mail: jk@jskammel.com

LPC.A.21

Existing and Proposed North Elevations

December 18, 2015

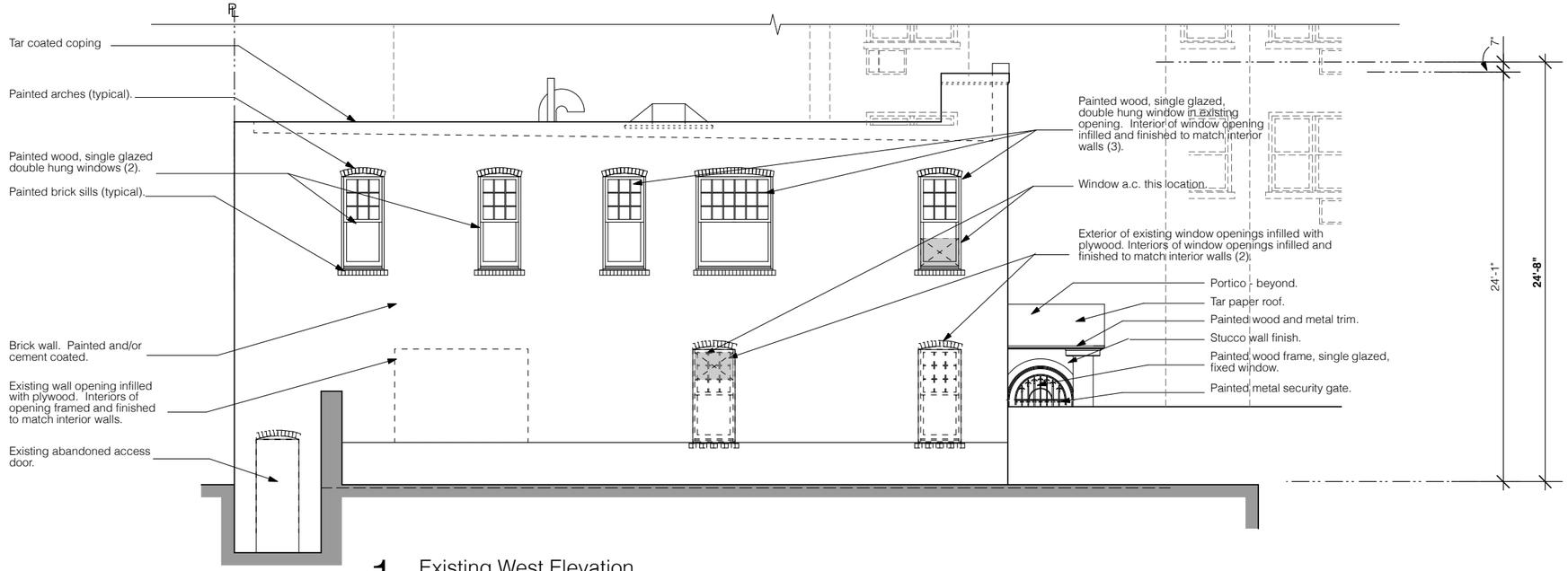

1 Existing West Elevation

0 2 4 6 8 10 FT

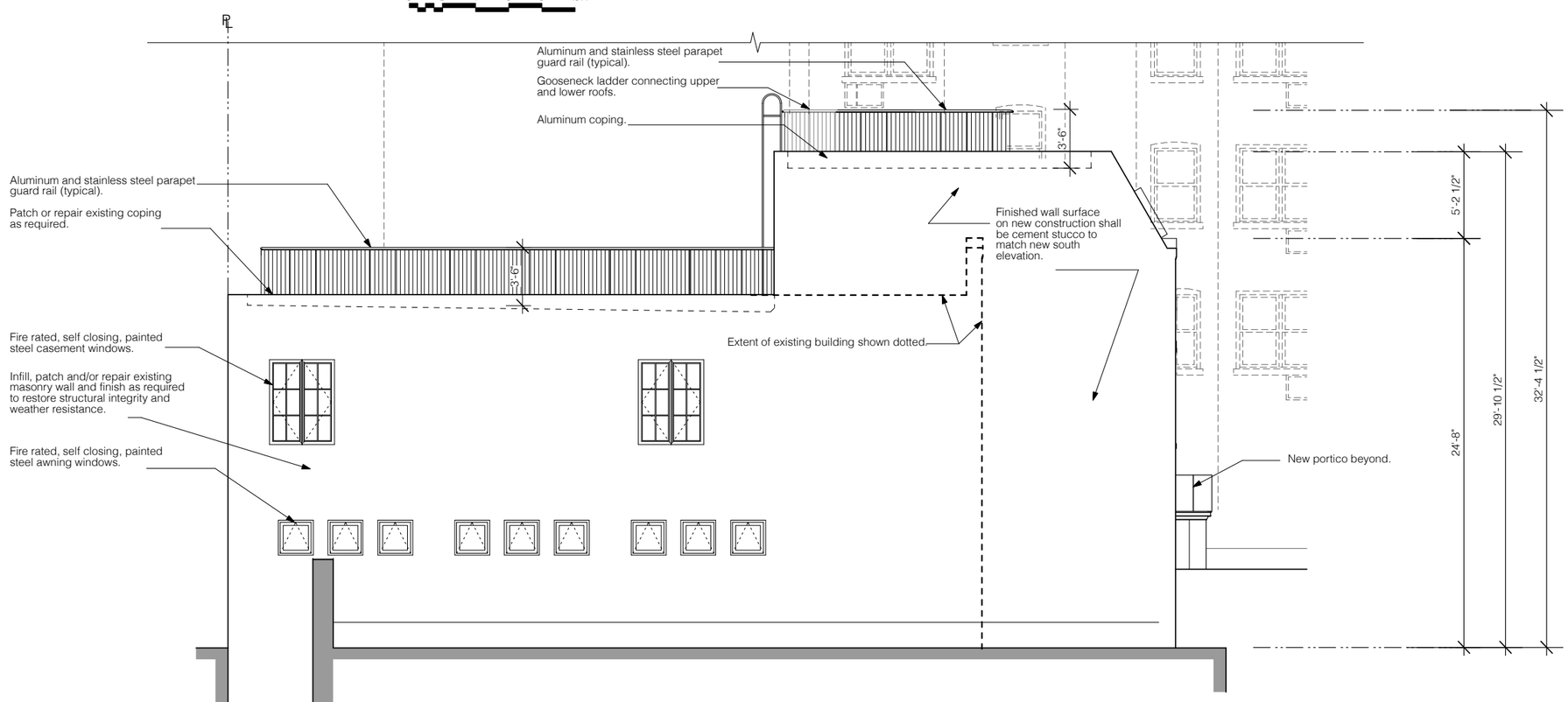

2 Proposed West Elevation

0 2 4 6 8 10 FT

THE DRAWINGS, SPECIFICATIONS, MODELS, AND OTHER MATERIALS PREPARED BY THE ARCHITECT FOR THIS PROJECT AND THE IDEAS CONTAINED THEREIN ARE, AND SHALL REMAIN, THE PROPERTY OF THE ARCHITECT. THEY ARE NOT TO BE USED IN CONNECTION WITH THIS PROJECT AND, UNLESS OTHERWISE PROVIDED, THE ARCHITECT SHALL BE DEEMED THE AUTHOR OF THE MATERIALS AND SHALL RETAIN ALL COMMON LAW, STATUTORY, AND OTHER RESERVED RIGHTS, INCLUDING THE COPYRIGHT.

The Conservative Synagogue of Fifth Avenue
11 East 11 Street
New York . New York . 10003

Jonathan S Kammel, Architect
372 Central Park West . New York, New York
Phone: 917.593.7020
e-mail: jk@jskammel.com

LPC.A.22

Existing and Proposed West Elevations

December 18, 2015

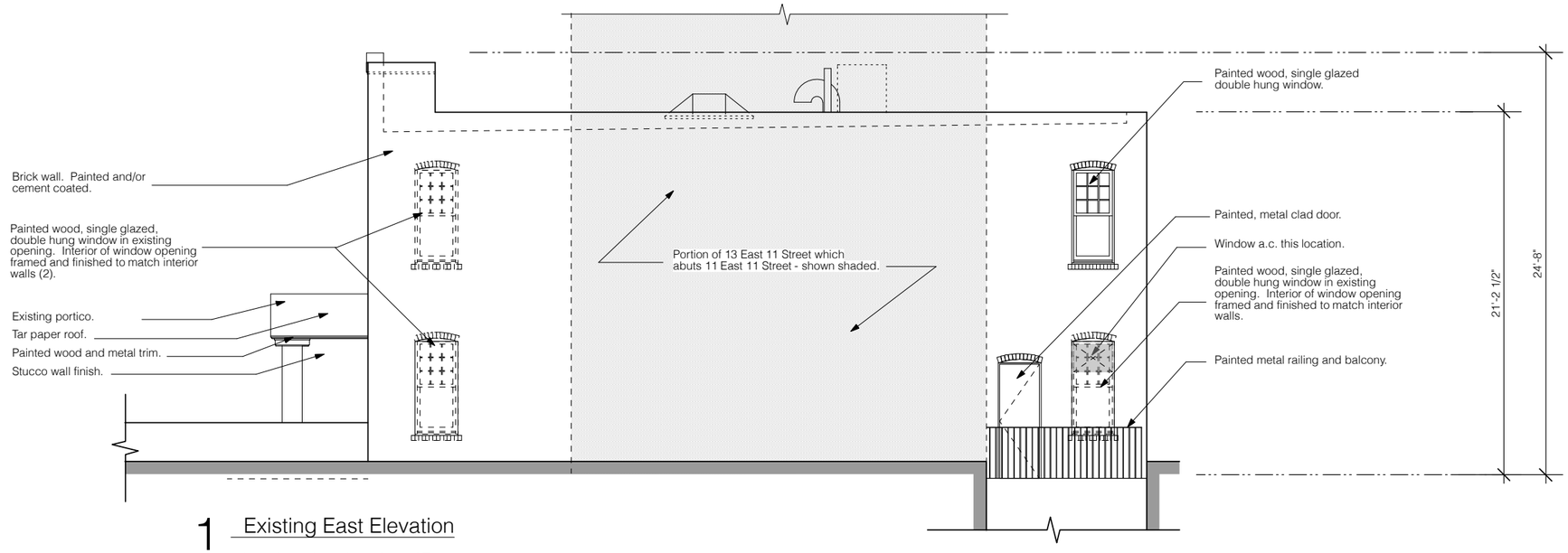

1 Existing East Elevation

0 2 4 6 8 10 FT

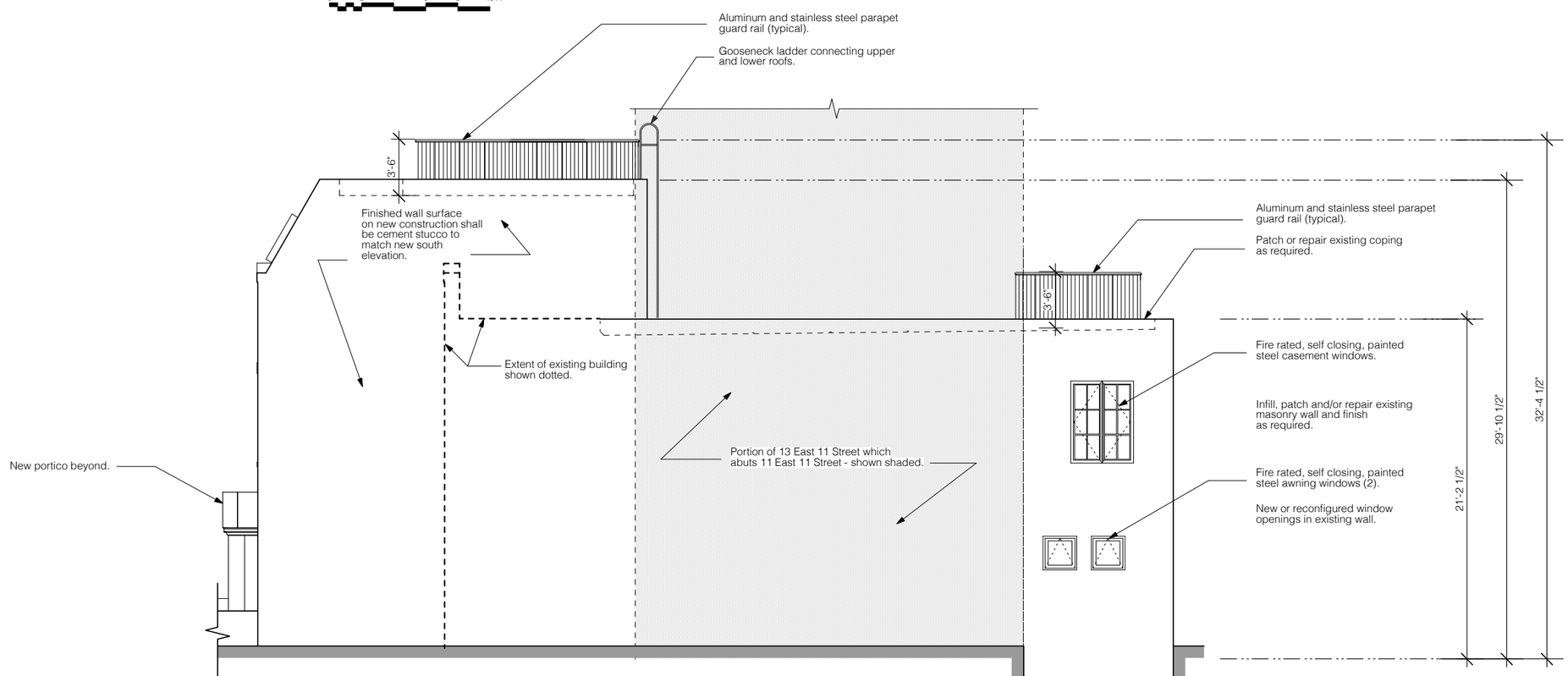

2 Proposed East Elevation

0 2 4 6 8 10 FT

THE DRAWINGS, SPECIFICATIONS, MODELS, AND OTHER MATERIALS PREPARED BY THE ARCHITECT FOR THIS PROJECT AND THE IDEAS CONTAINED THEREIN ARE INSTRUMENTS OF ARCHITECT'S SERVICE FOR USE SOLELY WITH RESPECT TO THIS PROJECT AND, UNLESS OTHERWISE PROVIDED, THE ARCHITECT SHALL BE DEEMED THE AUTHOR OF AND OWNER OF ALL RIGHTS IN THE MATERIAL, INCLUDING, BUT NOT LIMITED TO, ALL COPYRIGHTS, UNDER LAW, STATUTORY, AND OTHER RESERVED RIGHTS, INCLUDING THE COPY RIGHT.

The Conservative Synagogue of Fifth Avenue
11 East 11 Street
New York . New York . 10003

Jonathan S Kammel, Architect
372 Central Park West . New York, New York
Phone: 917.593.7020
e-mail: jk@jskammel.com

LPC.A.23

Existing and Proposed East Elevations

December 18, 2015

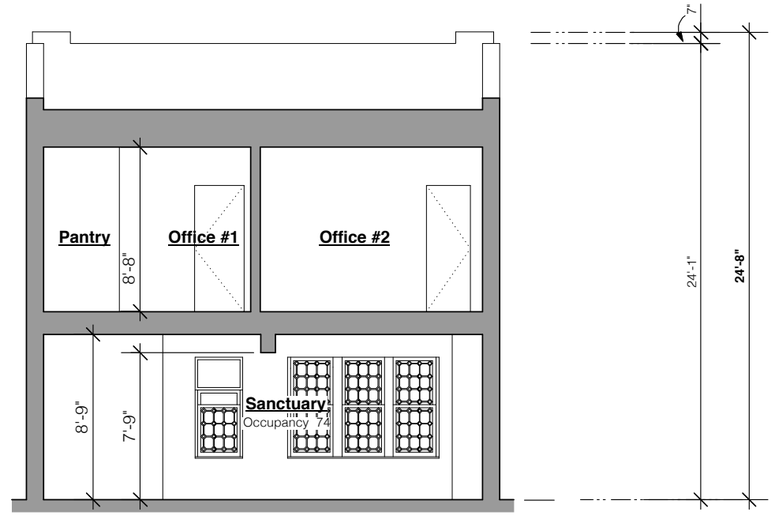

1 Existing Transverse Section

0 2 4 6 8 10 FT

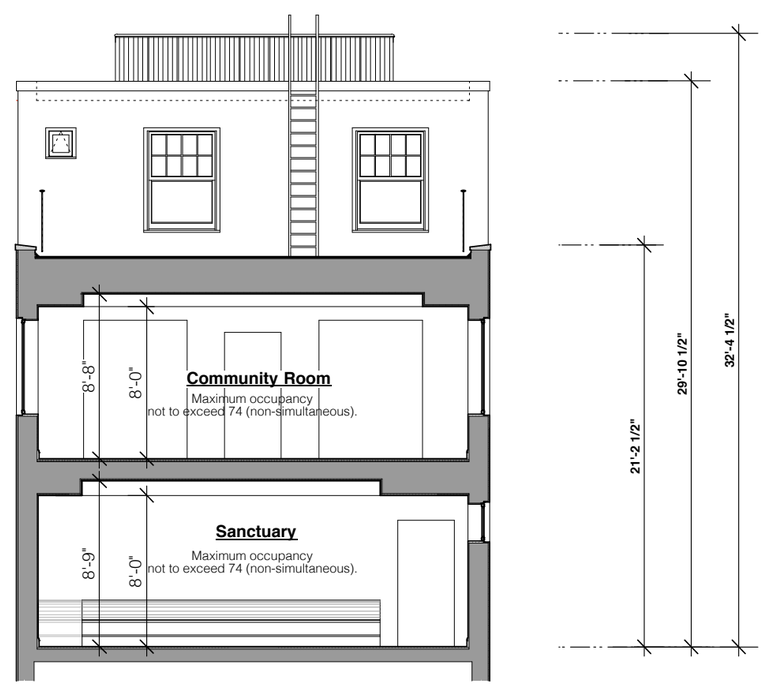

2 Proposed Transverse Section/Elevation

0 2 4 6 8 10 FT

THE DRAWINGS, SPECIFICATIONS, MODELS, AND OTHER MATERIALS PREPARED BY THE ARCHITECT FOR THIS PROJECT AND THE IDEAS CONTAINED THEREIN ARE INSTRUMENTS OF THE ARCHITECT'S SERVICE FOR USE SOLELY WITH RESPECT TO THIS PROJECT AND, UNLESS OTHERWISE PROVIDED, THE ARCHITECT SHALL BE DEEMED THE AUTHOR OF THE MATERIAL AND SHALL RETAIN ALL COMMON LAW, STATUTORY, AND OTHER RESERVED RIGHTS, INCLUDING THE COPY RIGHT.

The Conservative Synagogue of Fifth Avenue
11 East 11 Street
New York . New York . 10003

Jonathan S Kammel, Architect
372 Central Park West . New York, New York
Phone: 917.593.7020
e-mail: jk@jskammel.com

LPC.A.24

Proposed
Trans. Sections

December 18, 2015

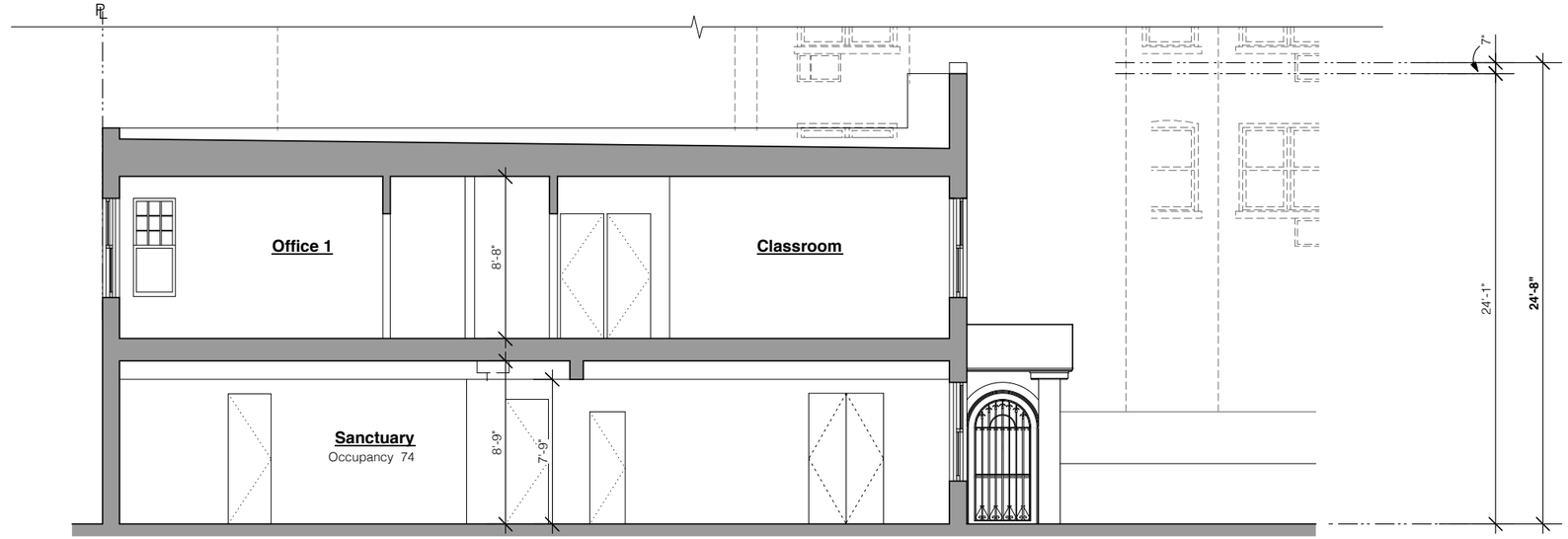

1 Existing Longitudinal Section

0 2 4 6 8 10 FT

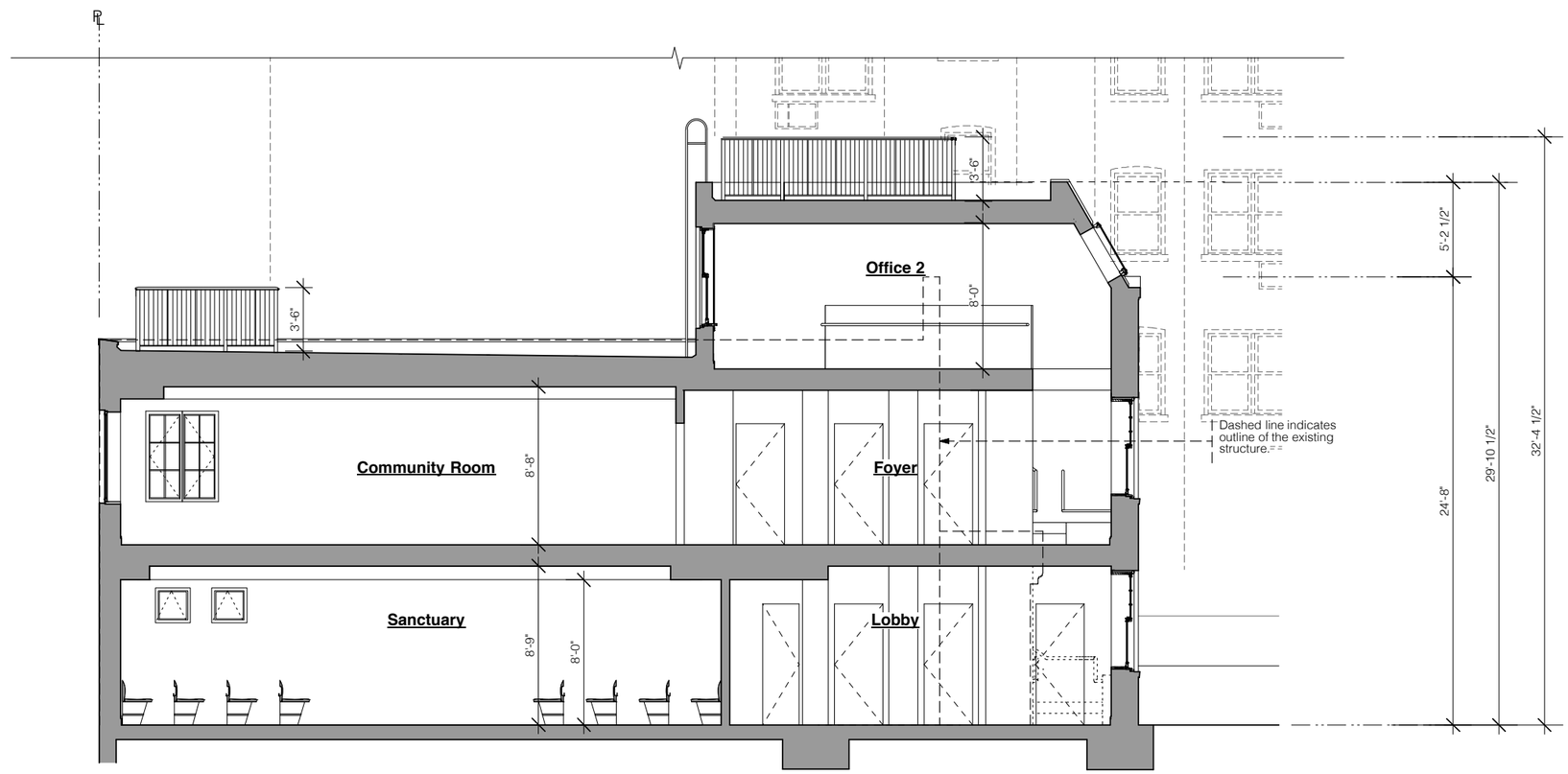

2 Proposed Longitudinal Section

0 2 4 6 8 10 FT

THE DRAWINGS, SPECIFICATIONS, MODELS, AND OTHER MATERIALS PREPARED BY THE ARCHITECT FOR THIS PROJECT AND THE IDEAS CONTAINED THEREIN ARE THE INTELLECTUAL PROPERTY OF THE ARCHITECT. THEY ARE NOT TO BE USED, IN WHOLE OR IN PART, FOR ANY PURPOSE NOT SPECIFICALLY WITH RESPECT TO THIS PROJECT AND, UNLESS OTHERWISE PROVIDED, THE ARCHITECT SHALL BE DEEMED THE AUTHOR OF THE MATERIALS AND SHALL RETAIN ALL COMMON LAW, STATUTORY, AND OTHER RESERVED RIGHTS, INCLUDING THE COPYRIGHT.

The Conservative Synagogue of Fifth Avenue
11 East 11 Street
New York . New York . 10003

Jonathan S Kammel, Architect
372 Central Park West . New York, New York
Phone: 917.593.7020
e-mail: jk@jskammel.com

LPC.A.25

Proposed
Long. Sections

December 18, 2015

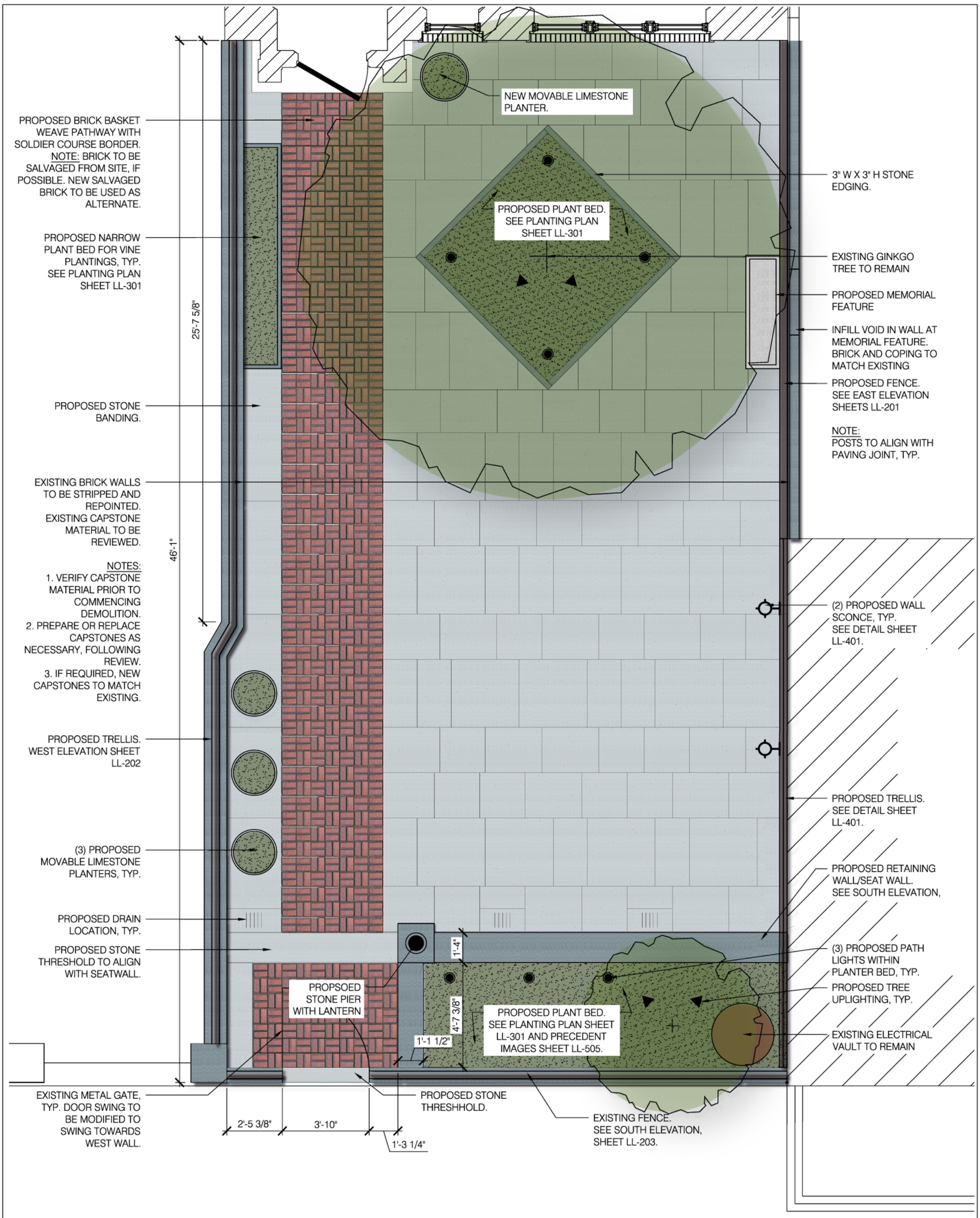

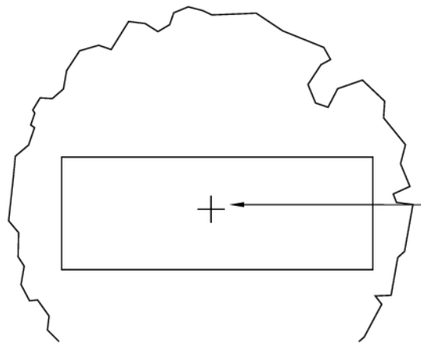

EXISTING SIDEWALK TO BE REPAIRED/REPLACED.

EXISTING STREET TREE

NOTES:
1. TREE PIT TO BE ENLARGED.
2. EXISTING TREE GUARD TO BE MODIFIED.

SCALE: 1/4" = 1'-0"

0' 1' 2' 4' 8'

N

LL-101
GARDEN LAYOUT
NYC - LPC Submission
December 18, 2015

RKLA
ROBIN KEY LANDSCAPE ARCHITECTURE
333 HUDSON STREET, SUITE 1001
NEW YORK, NY 10013
P: 212 229 2534 F: 212 229 2491
RKLASTUDIO.COM

Jonathan S Kammel
Architect

372 Central Park West
New York, New York
917.593.7020

jk@jskammel.com

The Conservative Synagogue of Fifth Avenue

11 East 11 Street
New York . New York . 10003

THE DRAWINGS, SPECIFICATIONS, MODELS, AND OTHER MATERIALS PREPARED BY THE ARCHITECT FOR THIS PROJECT, AND THE IDEAS CONTAINED THERE IN ARE INSTRUMENTS OF THE ARCHITECT'S SERVICE FOR USE SOLELY WITH RESPECT TO THIS PROJECT, AND, UNLESS OTHERWISE PROVIDED, THE ARCHITECT SHALL BE DEEMED THE AUTHOR OF THESE MATERIALS AND SHALL RETAIN ALL COMMON LAW, STATUTORY, AND OTHER RESERVED RIGHTS, INCLUDING THE COPY RIGHT.

01 EXISTING CONDITIONS
SCALE: N.T.S.

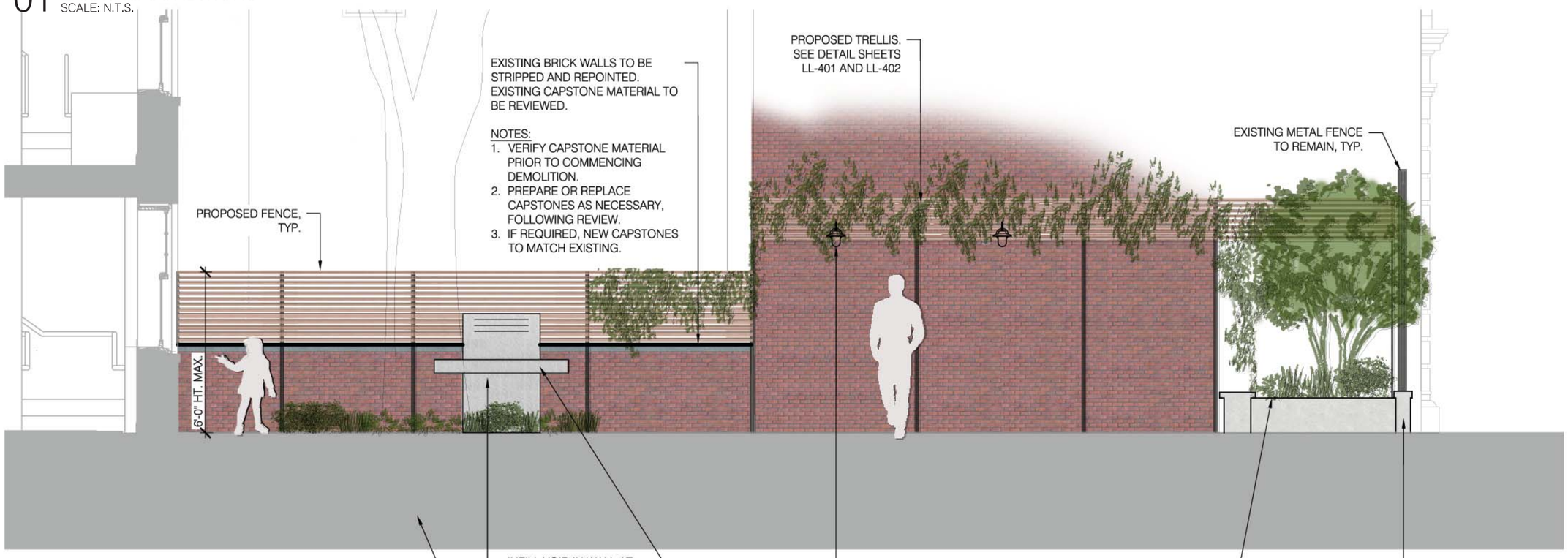

02 EAST ELEVATION
SCALE: 1/4" = 1'-0"

THE DRAWINGS, SPECIFICATIONS, MODELS, AND OTHER MATERIALS PREPARED BY THE ARCHITECT FOR THIS PROJECT ARE INSTRUMENTS OF THE ARCHITECT'S SERVICE FOR USE SOLELY WITH RESPECT TO THIS PROJECT, AND, UNLESS OTHERWISE PROVIDED, THE ARCHITECT SHALL BE DEEMED THE AUTHOR OF THESE MATERIALS AND SHALL RETAIN ALL COMMON LAW, STATUTORY, AND OTHER RESERVED RIGHTS, INCLUDING THE COPY RIGHT.

The Conservative Synagogue of Fifth Avenue

11 East 11 Street
New York . New York . 10003

Jonathan S Kammel
Architect

372 Central Park West
New York, New York
917.593.7020

jk@jskammel.com

RKLA
RUDNICKY LANDSCAPE ARCHITECTURE
320 HUDSON STREET, SUITE 1001
NEW YORK, NY 10014
P: 212.229.2234 F: 212.229.2481
RKLASTUDIO.COM

LL-201
EAST ELEVATION
NYC - LPC Submission
December 18, 2015

01 EXISTING CONDITIONS
SCALE: N.T.S.

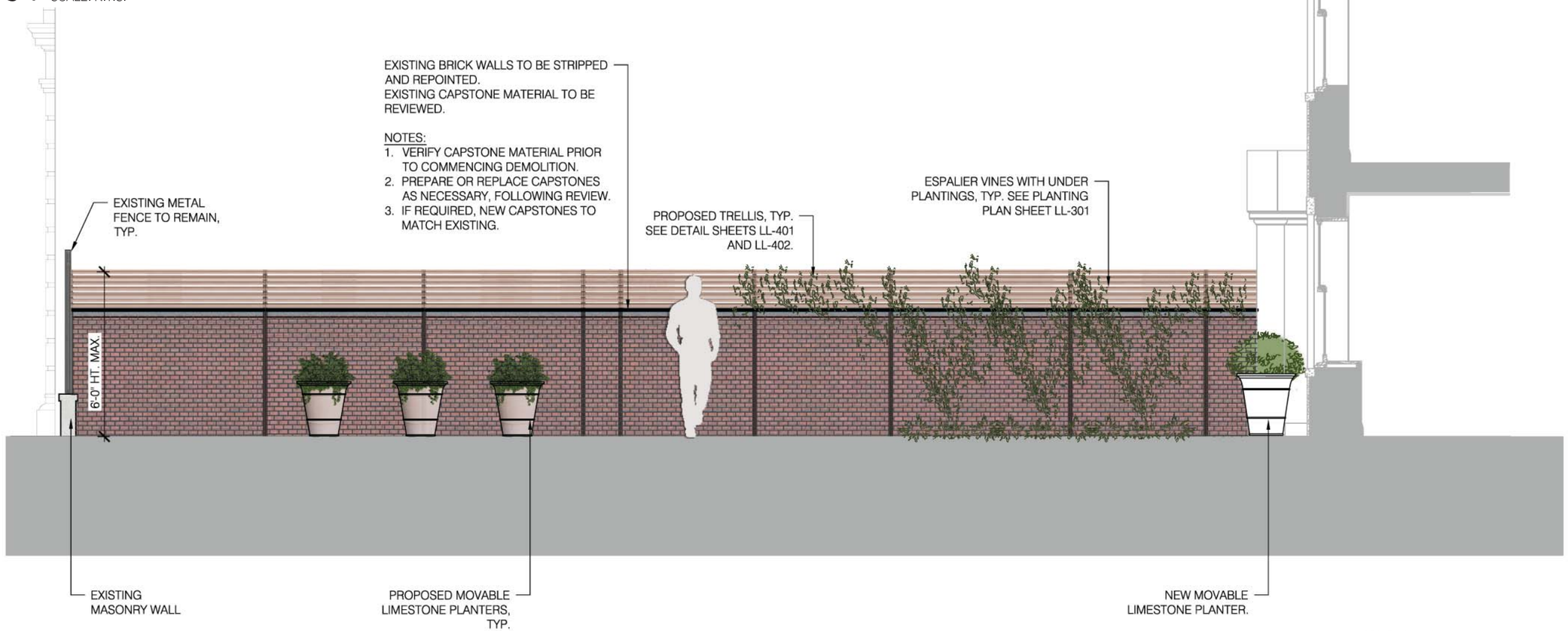

02 WEST ELEVATION
SCALE: 1/4" = 1'-0"

SCALE: 1/4" = 1'-0"

0' 1' 2' 4' 8'

THE DRAWINGS, SPECIFICATIONS, MODELS, AND OTHER MATERIALS PREPARED BY THE ARCHITECT FOR THIS PROJECT, AND THE IDEAS CONTAINED THERE IN ARE INSTRUMENTS OF THE ARCHITECT'S SERVICE FOR USE SOLELY WITH THIS PROJECT AND EXTENSIONS THEREOF. UNLESS OTHERWISE PROVIDED, THE ARCHITECT SHALL BE DEEMED THE AUTHOR OF THESE MATERIALS AND SHALL RETAIN ALL COMMON LAW, STATUTORY, AND OTHER RESERVED RIGHTS, INCLUDING THE COPY RIGHT.

The Conservative Synagogue of Fifth Avenue
11 East 11 Street
New York . New York . 10003

Jonathan S Kammel
Architect
372 Central Park West
New York, New York
917.593.7020
jk@jskammel.com

RKLA
ROBIN KEY LANDSCAPE ARCHITECTURE
303 HUDSON STREET, SUITE 1001
NEW YORK, NEW YORK 10014
P: 212 229 2334 F: 212 229 2491
RKLA@TUNO.COM

LL-202
WEST ELEVATION
NYC - LPC Submission
December 18, 2015

01 EXISTING CONDITIONS
SCALE: N.T.S.

02 SOUTH ELEVATION
SCALE: 3/8" = 1'-0"

SCALE: 3/8" = 1'-0"
0' 1' 2' 4'

THE DRAWINGS, SPECIFICATIONS, MODELS, AND OTHER MATERIALS PREPARED BY THE ARCHITECT FOR THIS PROJECT AND SUBMITTED TO THE CLIENT ARE INSTRUMENTS OF THE ARCHITECT'S SERVICE FOR USE SOLELY WITH RESPECT TO THIS PROJECT, AND, UNLESS OTHERWISE PROVIDED, THE ARCHITECT SHALL BE DEEMED THE AUTHOR OF THESE MATERIALS AND SHALL RETAIN ALL COMMON LAW, STATUTORY, AND OTHER RESERVED RIGHTS, INCLUDING THE COPY RIGHT.

The Conservative Synagogue of Fifth Avenue
11 East 11 Street
New York . New York . 10003

Jonathan S Kammel
Architect
372 Central Park West
New York, New York
917.593.7020
jk@jskammel.com

RKLA
ROBIN KEY LANDSCAPE ARCHITECTURE
133 HUDSON STREET, SUITE 1001
NEW YORK, NY 10013
P: 212.229.2534 F: 212.229.2481
RKLA@YAHOO.COM

LL-203
SOUTH ELEVATION
NYC - LPC Submission
December 18, 2015

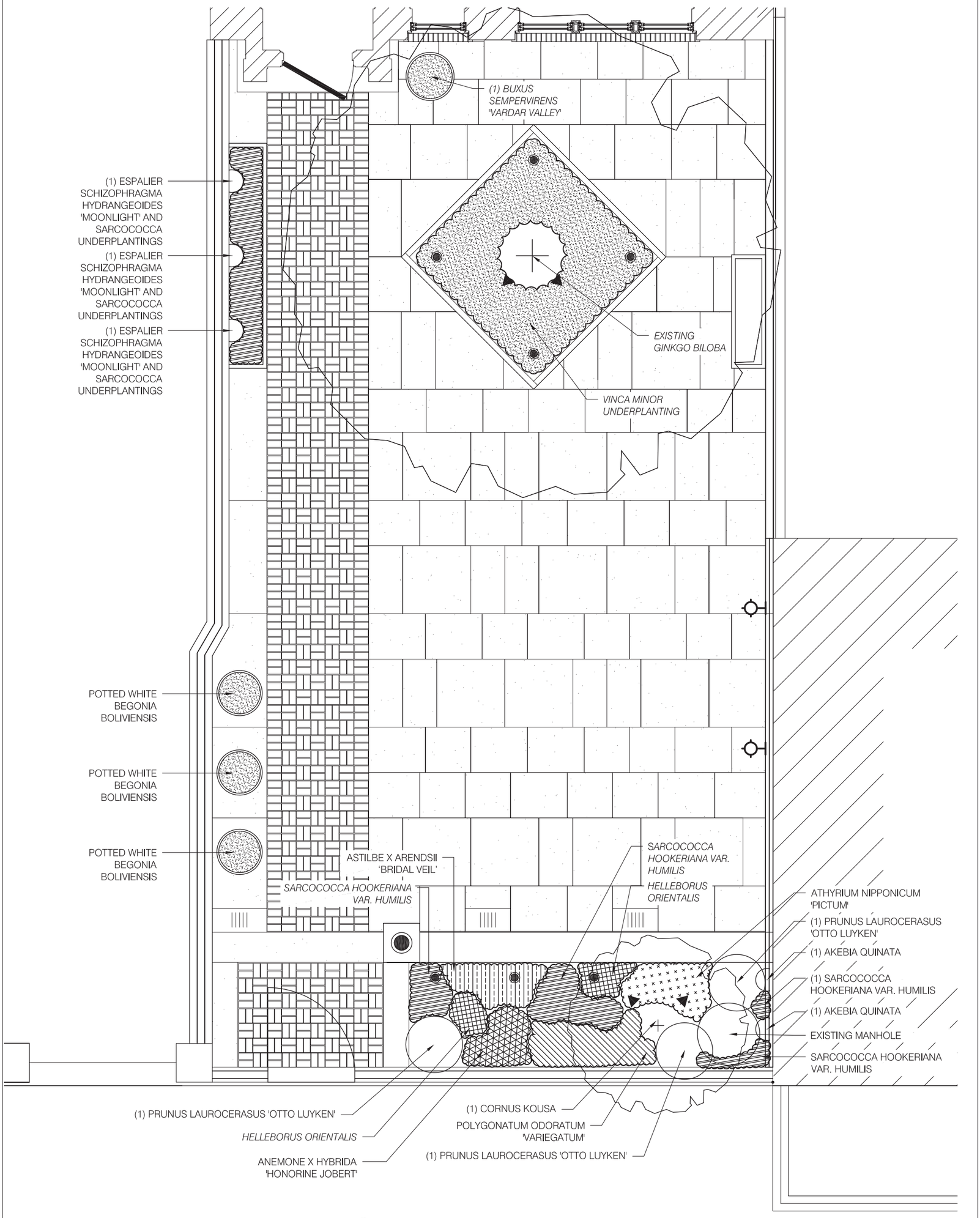

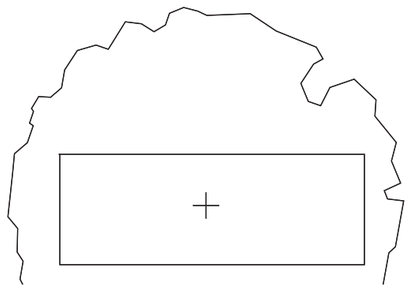

SCALE: 1/4" = 1'-0"

0' 1' 2' 4' 8'

N

LL-301

PLANTING PLAN

NYC - LPC Submission

December 18, 2015

RKLA
ROBIN KELLY LANDSCAPE ARCHITECTURE
333 HUDSON STREET, SUITE 1001
NEW YORK, NY 10013
P: 212 229 2534 F: 212 229 2491
RKLASTUDIO.COM

Jonathan S Kammel
Architect

372 Central Park West
New York, New York
917.593.7020

jk@jskammel.com

The Conservative Synagogue of Fifth Avenue

11 East 11 Street
New York . New York . 10003

THE DRAWINGS, SPECIFICATIONS, MODELS, AND OTHER MATERIALS PREPARED BY THE ARCHITECT FOR THIS PROJECT, AND THE IDEAS CONTAINED THERE IN ARE INSTRUMENTS OF THE ARCHITECTS SERVICE FOR USE SOLELY WITH RESPECT TO THIS PROJECT, AND, UNLESS OTHERWISE PROVIDED, THE ARCHITECT SHALL BE DEEMED THE AUTHOR OF THESE MATERIALS AND SHALL RETAIN ALL COMMON LAW, STATUTORY, AND OTHER RESERVED RIGHTS, INCLUDING THE COPY RIGHT.

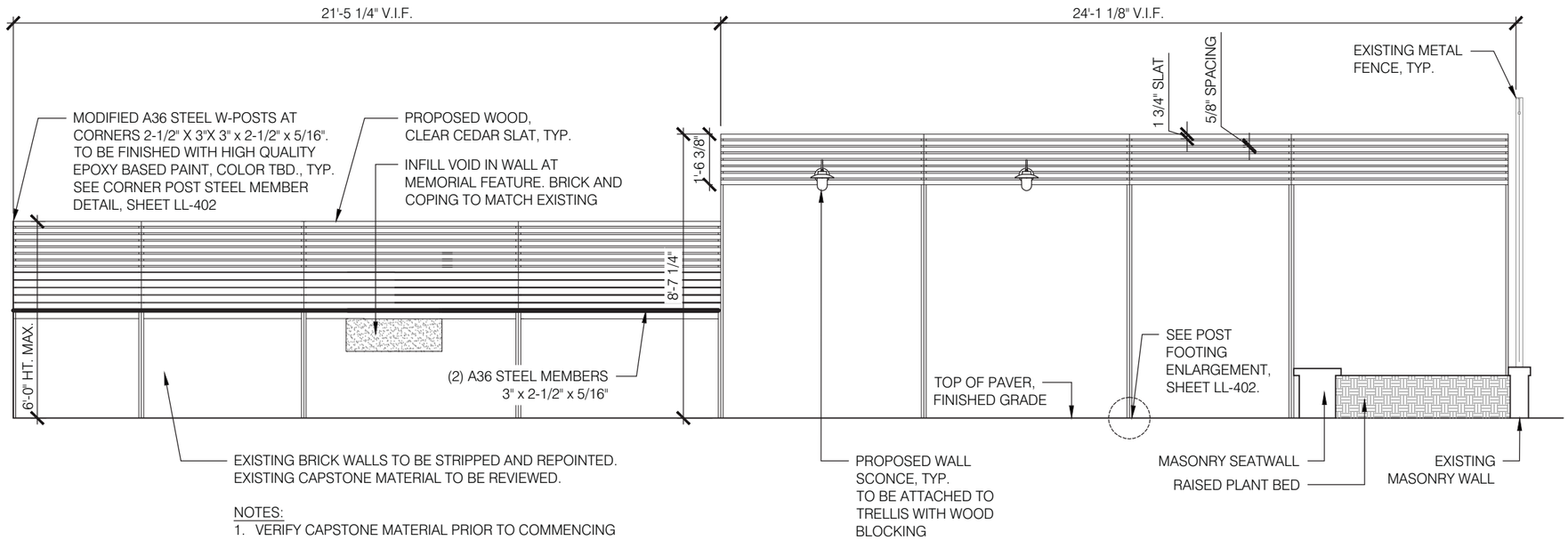

NOTES:
1. VERIFY CAPSTONE MATERIAL PRIOR TO COMMENCING DEMOLITION.
2. PREPARE OR REPLACE CAPSTONES AS NECESSARY, FOLLOWING REVIEW.
3. IF REQUIRED, NEW CAPSTONES TO MATCH EXISTING.

SCALE: 1/4" = 1'-0"

0' 1' 2' 4' 8'

01 TYPICAL TRELLIS/FENCE ELEVATION
1/4" = 1'-0"

THE DRAWINGS, SPECIFICATIONS, MODELS, AND OTHER MATERIALS PREPARED BY THE ARCHITECT FOR THIS PROJECT AND THE IDEAS, DESIGNS AND THEREIN ARE INSTRUMENTS OF THE ARCHITECT'S SERVICE FOR USE SOLELY WITH RESPECT TO THIS PROJECT, AND, UNLESS OTHERWISE PROVIDED, THE ARCHITECT SHALL BE DEEMED THE AUTHOR OF THESE MATERIALS AND SHALL RETAIN ALL COMMON LAW, STATUTORY, AND OTHER RESERVED RIGHTS, INCLUDING THE COPYRIGHT.

The Conservative Synagogue of Fifth Avenue
11 East 11 Street
New York . New York . 10003

Jonathan S Kammel
Architect
372 Central Park West
New York, New York
917.593.7020
jk@jskammel.com

RKLA
ROBIN KELLY LANDSCAPE ARCHITECTURE
333 HUDSON STREET, SUITE 100
NEW YORK, NY 10013
P: 212.229.2534 F: 212.229.2491
RKLA@YAHOO.COM

LL-401
DETAILS
NYC - LPC Submission
December 18, 2015

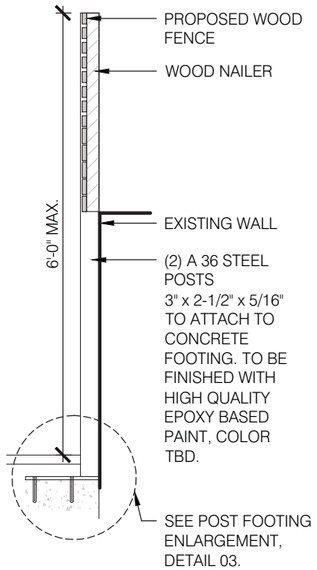

01 TYPICAL TRELLIS/FENCE - SECTION
1/2" = 1'-0"

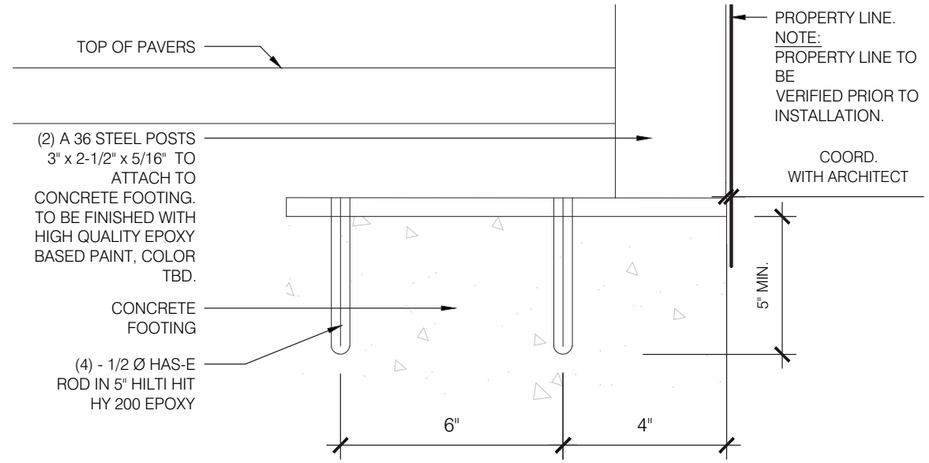

03 POST FOOTING ENLARGEMENT - SECTION
3" = 1'-0"

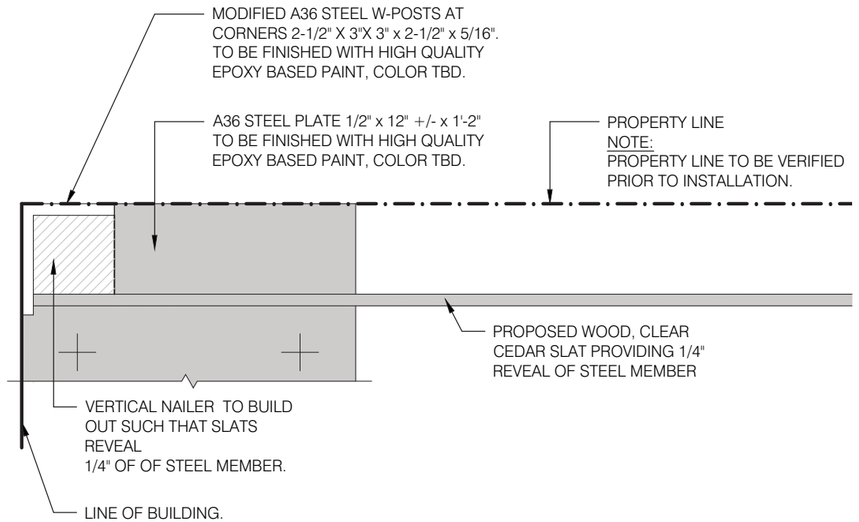

02 CORNER POST STEEL MEMBER DETAIL - PLAN VIEW
3" = 1'-0"

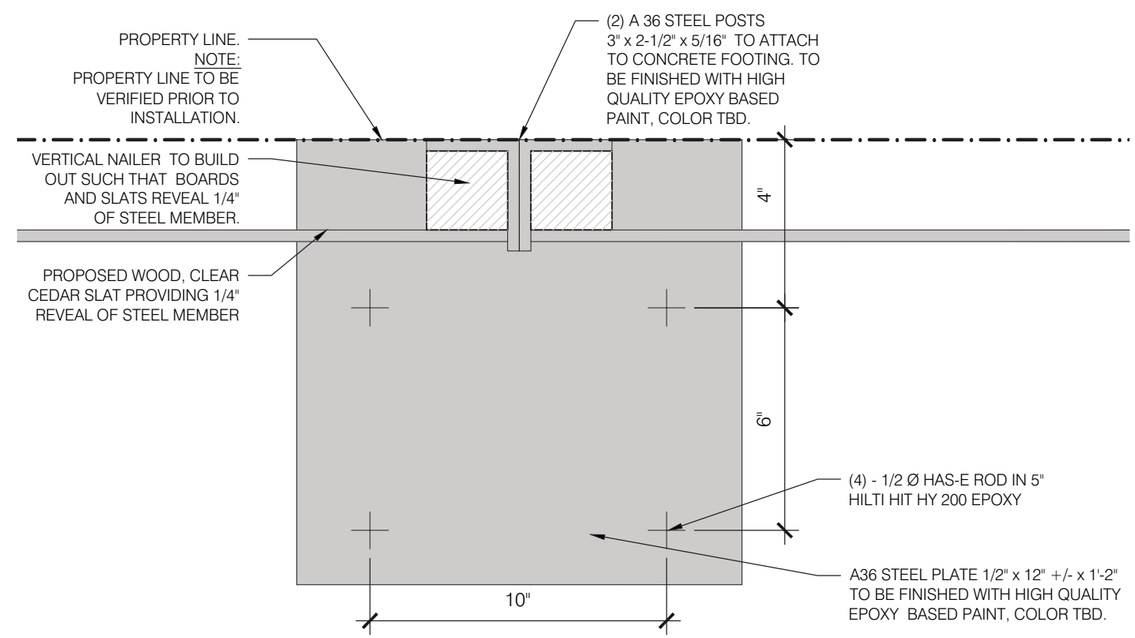

04 INTERMEDIATE STEEL POST ATTACHMENT DETAIL - PLAN VIEW
3" = 1'-0"

THE DRAWINGS, SPECIFICATIONS, MODELS, AND OTHER MATERIALS PREPARED BY THE ARCHITECT FOR THIS PROJECT AND THE IDEAS CONTAINED THEREIN ARE INSTRUMENTS OF THE ARCHITECT'S SERVICE FOR USE SOLELY WITH RESPECT TO THIS PROJECT, AND, UNLESS OTHERWISE PROVIDED, THE ARCHITECT SHALL BE DEEMED THE AUTHOR OF THESE MATERIALS AND SHALL RETAIN ALL COMMON LAW, STATUTORY, AND OTHER RESERVED RIGHTS, INCLUDING THE COPYRIGHT.

The Conservative Synagogue of Fifth Avenue
11 East 11 Street
New York . New York . 10003

Jonathan S Kammel
Architect
372 Central Park West
New York, New York
917.593.7020
jk@jskammel.com

RKLA
ROBIN KEY, LANDSCAPE ARCHITECTURE
333 HUDSON STREET, SUITE 1001
NEW YORK, NEW YORK 10013
P: 212.229.2014 F: 212.229.2481
RKLA@STUDIO.COM

LL-402
DETAILS
NYC - LPC Submission
December 18, 2015

THE DRAWINGS, SPECIFICATIONS, MODELS, AND OTHER MATERIALS PREPARED BY THE ARCHITECT FOR THIS PROJECT, AND THE IDEAS CONTAINED THEREIN, ARE INSTRUMENTS OF THE ARCHITECT'S SERVICE FOR USE SOLELY WITH RESPECT TO THIS PROJECT, AND, UNLESS OTHERWISE PROVIDED, THE ARCHITECT SHALL BE DEEMED THE AUTHOR OF AND OWNER OF ALL OWNERSHIP RIGHTS, COMMON LAW, STATUTORY, AND OTHER RESERVED RIGHTS, INCLUDING THE COPY RIGHT.

The Conservative Synagogue of Fifth Avenue

11 East 11 Street
New York . New York . 10003

Jonathan S Kammel, Architect

372 Central Park West . New York, New York
Phone: 917.593.7020

e-mail: jk@jskammel.com

NYC LPC

Aerial View

December 18, 2015

THE DRAWINGS, SPECIFICATIONS, MODELS, AND OTHER MATERIALS PREPARED BY THE ARCHITECT FOR THIS PROJECT, AND THE IDEAS CONTAINED THEREIN, ARE INSTRUMENTS OF THE ARCHITECT'S SERVICE FOR USE SOLELY WITH RESPECT TO THIS PROJECT, AND, UNLESS OTHERWISE PROVIDED, THE ARCHITECT SHALL BE DEEMED THE AUTHOR OF THESE MATERIALS AND THE OWNER OF ALL COMMON LAW, STATUTORY, AND OTHER RESERVED RIGHTS, INCLUDING THE COPY RIGHT.

The Conservative Synagogue of Fifth Avenue

11 East 11 Street
New York . New York . 10003

Jonathan S Kammel, Architect
372 Central Park West . New York, New York
Phone: 917.593.7020
e-mail: jk@jskammel.com

NYC LPC

Street View

December 18, 2015

THE DRAWINGS, SPECIFICATIONS, MODELS, AND OTHER MATERIALS PREPARED BY THE ARCHITECT FOR THIS PROJECT, AND THE IDEAS CONTAINED THEREIN, ARE INSTRUMENTS OF THE ARCHITECT'S SERVICE FOR USE SOLELY WITH RESPECT TO THIS PROJECT, AND, UNLESS OTHERWISE PROVIDED, THE ARCHITECT SHALL BE DEEMED THE AUTHOR OF THESE MATERIALS AND THE OWNER OF ALL COMMON LAW, STATUTORY, AND OTHER RESERVED RIGHTS, INCLUDING THE COPY RIGHT.

The Conservative Synagogue of Fifth Avenue

11 East 11 Street
New York . New York . 10003

Jonathan S Kammel, Architect
372 Central Park West . New York, New York
Phone: 917.593.7020
e-mail: jk@jskammel.com

NYC LPC

Courtyard View

December 18, 2015