Sample Streets

Figure 1 Treatments Appropriate to Major Through–Streets

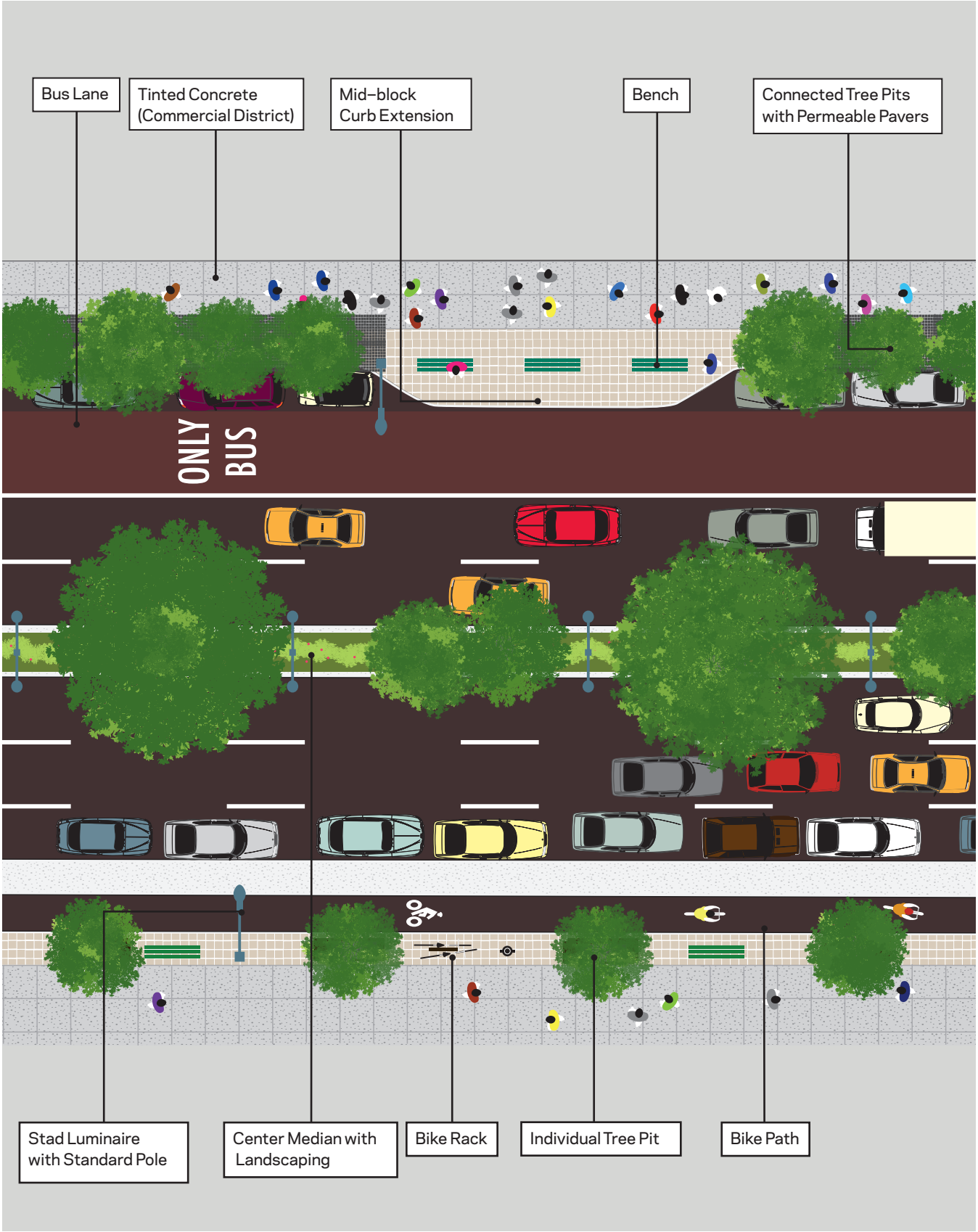

General Guidelines

The following guidelines expand on the general policies and principles outlined in Chapter 1, with more detailed information specific to geometric street design.

Vehicle Target Speed

Streets should be designed with target speeds (see Glossary) and speed limits appropriate to their surrounding uses and desired role in the vehicular network. New York State Vehicle & Traffic Law (VTL) Section 1642(a)(26)(a) currently allows speed limits below 25 mph, and as low as 15 mph, in New York City if used in conjunction with traffic calming measures. Slower target speeds and speed limits should be considered on local streets, residential streets, alleys; on streets adjacent to schools, and senior or disabled pedestrian trip generators; and waterfronts, parks, or other significant pedestrian destinations.

Roadway Width, Curb Radii & Crossing Distance

To minimize pedestrian crossing distances and reduce impermeable, heat–absorbing asphalt coverage, the paved roadway of all streets should be designed to be the minimum width —and have the minimum number of lanes—that safely and cost–effectively allow for the desired operations of motor vehicles, buses, and bicyclists. Roadway reconstructions should be designed for traffic volumes expected in the actual build year. Additional consideration should be given to recent trends in traffic and mode choice —as documented in NYC DOT's *Sustainable Streets Index* — and their implication for traffic volumes in future years (e.g., five years after the build year). Excess width should be reallocated to provide walking, transit, and bicycling facilities, public open space, green cover, and/or stormwater source control measures. If financial limitations preclude final implementation of street retrofits (e.g., curbing, streetscaping, etc.), the reallocation of space should still proceed with temporary or least costly approaches such as restriping.

To further reduce pedestrian crossing distances and slow turning vehicles, all roadway corners should be designed with the smallest possible radius that still accommodates the design vehicle and emergency vehicles.

Pedestrian crossing distances should be minimized in all locations utilizing the above methods and other treatments, such as curb extensions (neckdowns) and medians. Sidewalk narrowings and roadway widenings should be avoided.

Design Vehicles & Emergency Access

The design vehicles (see Glossary) used for geometric street designs, typically a single unit truck, should be appropriate to the predominant intended uses of the given street and should not include commercial vehicles larger than the allowed New York City maximum length. In addition, all street designs must consider FDNY, other emergency vehicle, and sanitation vehicle access needs (street cleaning and snow clearing).

Complex Intersections

Multi–leg or skewed angle intersections should be redesigned (to the extent possible) to simplify operations and reduce or separate conflicts. This can include the removal of intersection legs and slip lanes that are unimportant to the traffic network, creation of right–angled intersection alignments, and simplified traffic patterns. Resulting pedestrian space should be consolidated into its most usable form to create new public open space and shorter, more direct crossings. The use of slip lanes should generally be avoided.

Accessibility

Projects should meet all applicable federal, state, and/or local accessibility standards for public rights–of–way, including minimum clear sidewalk widths, inclusion of ADA–compliant pedestrian ramps, and provision of accessible waiting and boarding areas at transit stops.

Bike Lanes & Paths:

Bike Lane

USAGE: WIDE

A portion of a roadway that has been designated by striping, signs, and pavement markings for the preferential or exclusive use of bicyclists. Also known as a Class 2 bike lane.

Physical separation of bike lanes is desirable, but is not always possible due to physical or operational constraints.

Green, buffered bike lane: Broadway, Manhattan

Bike lane: 164th Street, Queens

Benefits

See benefits of BIKE LANES & PATHS (2.1.2)

Addition of on–roadway bike lanes that narrows or replaces motor vehicle lanes can calm traffic

Considerations

Without physical separation, vehicles can block bike lanes, making enforcement of violations more critical

Application

See application guidance for BIKE LANES & PATHS

Consideration should be given to use of BIKE PATH (2.1.2b) rather than, or in addition to, BIKE LANE whenever possible

Design

See design guidance for BIKE LANES & PATHS

BIKE LANES should be buffered when possible, typically with 3 feet of channelization

At intersections with complex traffic patterns—or when bike lanes located immediately adjacent to the curb—bike lanes can be given visual emphasis through the use of green–colored pavement

Sustainability Opportunities

See sustainability opportunities for BIKE LANES & PATHS

Bus Lanes & Busways

USAGE: LIMITED

A dedicated on–street facility for buses.

BUS LANES are delineated within the roadway with markings (2.1.3a) while BUSWAYS are physically separated from traffic for most of their length (2.1.3b). Both facility types can either be designed to run along the median of the street or along the outside (curbside or interior to a parking lane) of the street.

Red, curb–aligned, on–street busway with "soft separation" from traffic: 34th Street, Manhattan

Benefits

Improves bus speeds and reliability by separating buses from potential congestion in mixed traffic and reducing or eliminating their need to merge in and out of traffic at bus stops

Provides means for emergency vehicles to bypass traffic

Considerations

If curbside, may result in loss of curbside parking

Application

Streets with high bus volumes or Bus Rapid Transit (BRT) and moderate to high traffic congestion

Consider on all streets with high bus volumes or BRT and adequate space, regardless of congestion

Avoid on streets where the roadway geometry prevents the safe operation of a BUS LANE OR BUSWAY in conjunction with other necessary uses of the roadway

Design

BUS LANES & BUSWAYS can be located immediately adjacent to the curb (curb bus lane or busway), adjacent to the righthand parking lane (interior bus lane), or in the middle of a road with boarding island stations (median bus lane or busway)

All BUS LANE & BUSWAY types can be one or two lanes per direction based on bus volume, operating characteristics, and road width; one lane per direction is a more common treatment

A median BUS LANE or BUSWAY should be considered on two–way streets when sufficient right–of–way is available to accommodate the bus facility and the associated boarding islands, and the operation of the busway (including pedestrian movements) can be safely managed

For median bus lane or busway designs, boarding platforms must be included for bus passengers at bus stops; these islands can also function as MEDIAN SAFETY ISLANDS (2.2.4)

For median bus lane or busway designs, left turns across the bus facility should either be prohibited or provided a protected signal phase

Use an interior bus lane when parking needs to be maintained; stops can be made at the curb or at BUS BULBS (2.2.2c)

Use a curb–aligned bus lane or busway when right–of–way may be constrained or a median facility cannot be operated safely and where parking impacts can be managed

For curb–aligned designs, curbside deliveries can be accommodated with, lay–bys, and reserved commercial loading around the corner, e.g., delivery windows, delivery

All BUS LANE & BUSWAY designs can accommodate one or two directions of bus traffic. Special care must be paid to the signalization and design of intersections so as to not introduce turning conflicts

Consider queue–jump lanes for buses where buses need to merge with mixed traffic, where the roadway width reduces (such as at the end of a bus lane, a roadway choke point, or a bridge or tunnel approach), and at turn priority locations

For improved roadway longevity, a concrete roadway should be considered for BUS LANES & BUSWAYS when conditions permit

Sustainability Opportunities

Utilize paving with a high SRI value within bus lane or busway unless red–colored pavement is to be used as per 2.1.3a

Utilize recycled content in paving materials

Shared Street

USAGE: PILOT

Often referred to as a "pedestrian-priority street," a shared street is a low-speed, typically curbless roadway designed as a single surface shared among pedestrians, bicyclists, and low-speed motor vehicles.

Typically employed on local-access streets, vehicles are slowed to very low speeds through a reduced speed limit, traffic calming, signage, and use of distinctive materials, furnishings, and other visual cues in the roadway that encourage drivers to travel with increased caution. Street users generally negotiate right of way cooperatively rather than relying on traffic controls, allowing pedestrians to dominate the street. The entire street thus effectively functions as a public space. Different forms of shared streets can be used in different contexts.

Shared street: Mainz, Germany
(Note: for illustrative purposes only)

Shared street in a commercial area: Brighton, UK (Credit: Gehl Architects)
(Note: for illustrative purposes only)

Benefits

Allows freer pedestrian movement within walking–oriented areas and to and from surrounding land uses and destinations

Reduces sidewalk crowding on narrow streets

Maintains bicycle, local vehicle, and delivery access while creating an exceptionally pedestrian–oriented street that accommodates recreational and social activities

Allows active land uses to spread into the surrounding street network, fostering a vibrant public realm

Comfortable, attractive environment encourages "staying" activities such as relaxing, shopping, eating, and socializing

Integrated design can incorporate art, street furniture, landscaping, and other innovative and attractive design elements

Encourages partnerships with the community in beautification, maintenance and programming of street space

Considerations

Accommodation of and navigation by the visually impaired should be given particular attention

May impact street drainage or require catch basin relocation

May require loss of on-street parking

Any community facilities integrated into the design (such as street furniture or public art) will typically necessitate the presence of a maintenance partner and a permit or revocable consent from the city

Application

Consider on narrower streets (at most two moving lanes), or outer roadways of boulevard–type streets, with little or no through–traffic, and which are not major vehicular or bicyclist through–routes or designated truck routes

Consider on streets adjacent to major pedestrian destinations such as retail, waterfront, park, plaza, civic, cultural or transit hub land uses, where vehicle volumes are low and pedestrian desire lines are diffuse (i.e., pedestrians would like to cross the street in many places)

Consider on local residential streets whose design priority is to allow safe use of street space for recreational activities and green space, in partnership with residents or neighborhood groups

Consider on narrow, alley-type streets

Traffic Diverters:

Forced Turn

USAGE: LIMITED

An island or sidewalk extension at the approach to an intersection that prevents left or right turns and through–movements from the intersecting street.

Like other traffic islands and sidewalk extensions, a forced turn can include plantings or other design features.

Forced turn: Riverside, California (Credit: Ryan Snyder)

Forced turn with bike channel: Berkeley, California (Credit: Jessica Roberts)
(Note: for illustrative purposes only)

Benefits

See benefits for TRAFFIC DIVERTERS (2.3.3)

Enhances safety at intersection by reducing potential vehicle movements and conflicts, particularly left turns

Reduces risk of motorists running a red light or stop sign when approaching from side street

Enhances pedestrian safety and accessibility by reducing crossing distances and providing refuge for pedestrians to cross road in stages

Application

See application guidance for TRAFFIC DIVERTERS

Two–way local streets at their intersections with one–way streets or with two–way streets on which a MEDIAN BARRIER (2.3.3a) is not possible

Design

See design guidance for TRAFFIC DIVERTERS

Sustainability Opportunities

See sustainability opportunities for TRAFFIC DIVERTERS

For NYC DOT projects, any street trees included beyond NYC DOT's approved funding must be funded by NYC DPR or another entity

Tree placement near subsurface steam lines may transmit too much heat to tree roots, compromising tree health

Application

All areas with FULL SIDEWALKS (2.2.1a)

CONNECTED TREE PITS (2.4.1b) should be utilized as an alternative to INDIVIDUAL TREE PITS (2.4.1a) wherever feasible

RIBBON SIDEWALK (2.2.1b) should be used as an alternative to a FULL SIDEWALK in areas of low– to moderate–land use density as per its application guidance, in which case street trees do not require tree pits

Design

Meet minimum size and design requirements of NYC DPR's *Tree Planting Standards* (see Appendix C) contingent upon accommodation of pedestrian capacity and subsurface constraints

If work includes tree planting, consider the location of utility infrastructure, including NYC DEP sewers and water mains

The New York City Zoning Resolution requires that one tree be provided for every 25 feet of curb frontage for new developments and major alterations

Maximize exposed soil to allow more water and air to get to the roots of the tree; use paving or other surface treatments over the tree pit in high pedestrian traffic areas

Tree pit guards or wickets enclosing the perimeter of the tree pit are permitted where their use does not impede pedestrian traffic and should not impede stormwater flow into the tree pit

Do not use tree pit grates that are flush with the sidewalk to cover tree pits

Vertical tree guards that enclose the tree trunk are not permitted

Stagger street tree species along a block to avoid species blight

Design tree pits to discourage the encroachment of pets

Design sidewalks to direct stormwater into tree pits wherever advisable

Sustainability Opportunities

Maximize size of tree pit while adequately accommodating pedestrian movement and curbside access needs

Utilize no paving or use permeable paving over tree pit

Use CONNECTED TREE PITS instead of INDIVIDUAL TREE PITS to increase root space and stormwater intake

Consider the pilot use of STORMWATER–CAPTURING TREE PIT (2.4.1c)

Asphaltic Concrete

USAGE: STANDARD

Mixture of asphalt binder and stone aggregate, usually laid on a concrete base and compacted by a roller to form a solid road surface.

Typical black asphalt roadway: Delancey Street at Forsyth Street, Manhattan

Benefits

Provides smooth, durable, and frictionally excellent road surface

Material is widely available and cost effective

Impervious quality channels water to the curb on crowned roadways

Dark color hides dirt and stains, creates background for high–contrast markings

Easy to maintain and patch

Can be pigmented or imprinted for varied purposes

Asphalt can be recycled

Considerations

Prone to rutting and shoving under high volumes of heavy vehicles

Application

Asphalt is standard for roadbeds in all neighborhoods unless otherwise specified

Material is preferred road surface for cyclists

This material is generally maintained by NYC DOT

Design

Minimum 3–inch–thick wearing course, typically

Roadway should be crowned to drain stormwater from the road surface

May require concrete base

Specification source: NYC DOT Standard Specifications sections 2.05, 3.01, 4.01, 4.02

Detail source: NYC DOT Standard Details drawing H–1034 and related

Sustainability Opportunities

High recycled asphalt (RAP) content

Asphalt with high SRI values

Porous asphalt

Concrete

USAGE: STANDARD

Mixture comprised of cement(s), aggregate(s), water, and other chemical admixtures, poured over metal reinforcement bars, smoothed, and then allowed to harden, forming a solid road surface.

Typical concrete roadbed: West Side Highway, Manhattan

Typical concrete bus pad: Manhattan Ave at 114th Street, Manhattan

Benefits

Provides durable and frictionally excellent road surface

This material is widely available and cost effective

Impervious quality channels water to the curb on crowned roadways

Resists rutting and shoving that can occur with asphalt

Compared to asphalt, reduces impact of vehicle travel vibrations on sub–surface features and neighboring structures

Considerations

Difficult to replace or patch in sections where utility cuts or defects occur

Application

Should be used wherever engineering criteria dictates, such as bridges, vaulted roadways, or bus pads

Should not be used where frequent utility cuts are likely

Will be evaluated on a case–by–case basis based on engineer review of roadway structure

This material is generally maintained by NYC DOT

Design

Must have joints to allow for expansion no more than 20 feet apart

May require metal reinforcement bars as specified by NYC DOT

Specification source: NYC DOT Standard Specifications sections 3.05, 4.05

Detail source: NYC DOT Standard Details drawing H–1050

Detail source (bus pad): NYC DOT Standard Details drawings H–1005, H–1005 A

Sustainability Opportunities

Supplementary cementitious materials (SCM)

Granite Pavers

USAGE: OPTIONAL

Stone unit paver known for durability and associated with high–quality traditional streets.

Example of square granite pavers in a crosswalk: 48th Avenue at Center Boulevard, Queens

Long granite pavers set in poured concrete: West Side Highway, Manhattan

Benefits

Visually enhances crosswalk

Considerations

Due to the possibility of pavers cracking or becoming uneven, and asphalt shoving at the borders, application requires attentive maintenance

Application

Crosswalks on historic streets or where distinction is desired and there are low volumes of heavy vehicle traffic

Should not be used where frequent utility cuts are likely

Use of this material generally requires a maintenance agreement

Design

Crosswalks generally should comply with MUTCD standards

Paver size: minimum 4 inches for shortest dimension, maximum 30 inches for longest dimension, minimum 5–inches thickness for vehicular roadbed

Pavers that have a ratio of length to width greater than 2:1 should only be used when set in poured concrete because of the likelihood of breakage under heavy–vehicle traffic

Granite must have a textured surface that provides sufficient slip resistance to meet a minimum 0.60 coefficient of friction when wet

Specification source: NYC DOT Standard Specifications section 6.04

Sustainability Opportunities

Salvaged pavers

Untinted Concrete

USAGE: STANDARD

Mixture comprised of cement(s), aggregate(s), water, and other chemical admixtures, smoothed and then allowed to harden, forming a solid sidewalk surface.

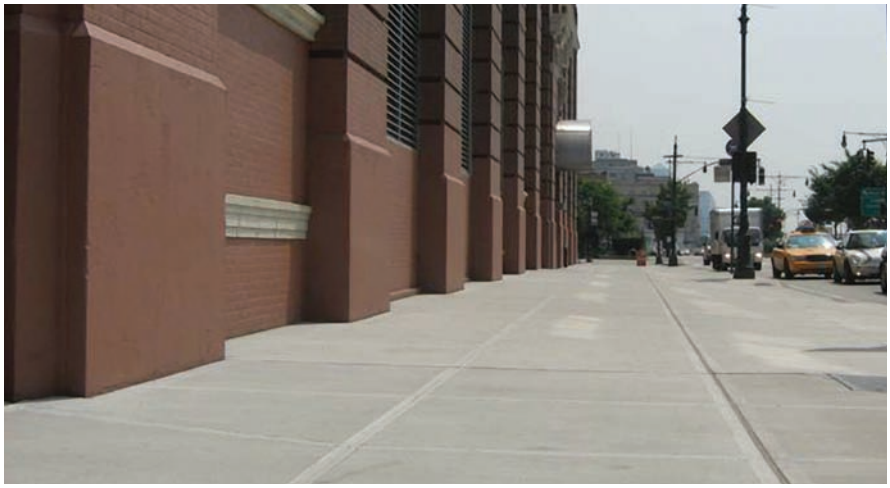

Typical concrete sidewalk: West Street at 16th Street, Manhattan

Concrete ribbon sidewalk: Rockaway Beach Boulevard, Queens

Benefits

Provides durable and frictionally excellent sidewalk surface

This material is widely available and cost effective

Considerations

Difficult to patch in sections where utility cuts or defects occur

Application

Appropriate for sidewalks on all non–commercial and non–historic streets and select commercial streets unless otherwise specified

Other options should be evaluated where frequent utility cuts are likely

Adjacent property owners are generally responsible for maintaining this material

Design

Flag size: 5 feet by 5 feet

Joint: "tooled joint" or simulated saw–cut joint scoring patterns

Typically requires 6–inch gravel base

May require metal reinforcement bars as specified by NYC DOT

Specification source: NYC DOT Standard Specifications sections 2.02, 2.15, 2.22, 3.05, 4.13

Detail source: NYC DOT Standard Details drawing# H–1045

Sustainability Opportunities

Supplementary cementitious materials (SCM)

Tinted Concrete

USAGE: STANDARD*/HISTORIC

Same mixture as untinted concrete, but with a pigment. Also used in historic districts to simulate historic pavers that cannot be replaced in kind, as per LPC guidelines.

** Pending regulatory change, this material may be standard only for commercial districts C4–4 through C4–7, C5 and C6, as defined in the Zoning Resolution of the City of New York.*

Typical tinted concrete sidewalk with simulated saw–cut joint scoring: Broadway at Exchange Place, Manhattan

Bluestone pavers shown in the foreground, with tinted concrete to simulate the historic pavers shown in the background: Hudson Street at Christopher Street, Manhattan

Benefits

See benefits of UNTINTED CONCRETE (3.3.1)

Dark tinting visually enhances sidewalk and emphasizes urban character in areas with greatest commercial and retail density

Reinforces historic character (if applicable)

Scored joints provide cleaner look, simulating individually hewn blocks of stone.

Considerations

See considerations for UNTINTED CONCRETE

Application

Standard in commercial districts C4–4 through C4–7, C5 and C6, as defined in the Zoning Resolution of the City of New York

Required in historic districts when bluestone or granite is being replaced, as per LPC guidelines

Adjacent property owners are generally responsible for maintaining this material

Design in Commercial Districts

Flag size: 5 feet by 5 feet

Pigmenting: 3% Light Grey Portland Cement

Joint: simulated saw–cut joint scoring

Typically requires 6–inch gravel base

May require metal reinforcement bars as specified by NYC DOT

Specification source: NYC DOT Standard Specifications section 4.13

Design In Historic Districts

Flag size and pigmenting to match existing pavers as per LPC guidelines

Joint: "tooled joint" scoring

Typically requires 6–inch gravel base

May require metal reinforcement bars as specified by NYC DOT

Specifications and standard details available in the LPC guidelines

Sustainability Opportunities

See sustainability opportunities for UNTINTED CONCRETE

Tinted Concrete with Exposed Light–Colored Aggregate

USAGE: OPTIONAL

Same mixture as tinted concrete, but with addition of exposed light–colored pebble–sized aggregate. Joints are scored to simulate saw–cutting.

Tinted concrete sidewalk with light–colored exposed aggregate (note: this example does not include the required "simulated saw–cut joint" scoring pattern): 42nd Street at Grand Central Terminal, Manhattan

Benefits

See benefits of TINTED CONCRETE (3.3.1a)

Exposed aggregate creates a texture and more natural appearance

Exposed aggregate camouflages dirt and gum

Considerations

See considerations for TINTED CONCRETE

Application

This material is recommended for commercial areas with high foot traffic

Because this is an optional sidewalk treatment, it is best used when applied to entire blocks, rather than to the sidewalks of individual small properties which would create a "patchwork" effect

Adjacent property owners are generally responsible for maintaining this material

Design

See design guidance for TINTED CONCRETE

Aggregate: pebble–sized, light in color

Aggregate specification source: NYC DOT Standard Specifications section 4.13 E, item numbers 4.13 EAGG (for four–inch sidewalk), 4.13 EBGG (for seven–inch sidewalk)

Sustainability Opportunities

See sustainability opportunities for TINTED CONCRETE

Tinted Concrete with Silicon Carbide Treatment

USAGE: OPTIONAL

Same mixture as tinted concrete, but treated with silicon carbide to add sparkle.

Tinted concrete sidewalk with silicon carbide treatment, shown with non–standard flag size: San Francisco, CA (Credit: Flickr user "Caribb")

Benefits

See benefits of TINTED CONCRETE (3.3.1a)

Sparkle adds distinction and visual enhancement to tinted concrete

Increases slip resistance of surface

Considerations

See considerations for TINTED CONCRETE

Application

This material is appropriate for sidewalks in commercial districts

Because this is an optional sidewalk treatment, it is best used when applied to entire blocks, rather than to the sidewalks of individual small properties which would create a "patchwork" effect

Adjacent property owners are generally responsible for maintaining this material

Design

See design guidance for TINTED CONCRETE

Silicon carbide specification source: NYC DOT Standard Specifications section 4.13

Sustainability Opportunities

See sustainability opportunities for TINTED CONCRETE

Sand–Colored Concrete with Exposed Aggregate

USAGE: OPTIONAL

Same mixture as tinted concrete, but sand–colored, and with multi–colored pebble–sized exposed aggregate.

Sand–colored concrete sidewalk with exposed aggregate: Prospect Park West, Brooklyn

Benefits

See benefits of TINTED CONCRETE WITH EXPOSED LIGHT–COLORED AGGREGATE (3.3.1b)

Sand color reinforces natural character of open spaces

Considerations

See considerations for TINTED CONCRETE WITH EXPOSED LIGHT–COLORED AGGREGATE

Application

This material is appropriate for sidewalks adjacent to waterfronts and open spaces

Because this is an optional sidewalk treatment, it is best used when applied to entire blocks, rather than to the sidewalks of individual small properties which would create a "patchwork" effect

Adjacent property owners are generally responsible for maintaining this material

Design

See design guidance for TINTED CONCRETE WITH EXPOSED LIGHT–COLORED AGGREGATE

Pigmenting: sand–colored

Aggregate: pebble–sized, mixed–color river rock

Specification source: NYC DOT Standard Specifications section 4.13 ESA (for four–inch sidewalks), 4.13 ESB (for seven–inch sidewalks)

Sustainability Opportunities

See sustainability opportunities for TINTED CONCRETE WITH EXPOSED LIGHT–COLORED AGGREGATE

London Pavers

USAGE: OPTIONAL

Large precast concrete pavers laid in a staggered pattern.

London pavers: Brooklyn Bridge Pedestrian Access Ramp, Manhattan

Benefits

See benefits of UNTINTED CONCRETE (3.3.1)

Reinforces civic character of area

Less expensive than stone paver alternatives

Considerations

Unit pavers can become loose over time and will require regular maintenance

Application

For sidewalks fronting on city, state or federally–owned buildings and other civic structures such as bridges, courthouses, libraries, and memorials

Because this is an optional sidewalk treatment, it is best used when applied to entire blocks, rather than to the sidewalks of individual small properties which would create a "patchwork" effect

Use of this material generally requires a maintenance agreement

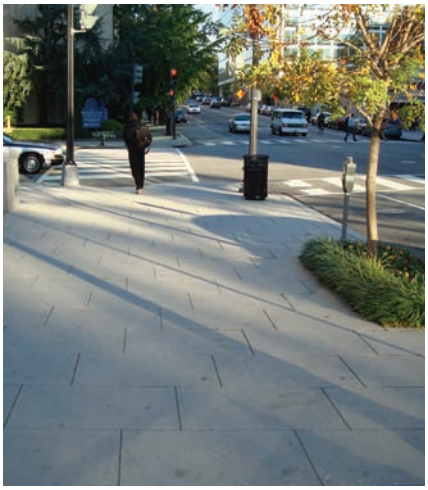

London pavers (note: this example shows a non–standard size): Washington, DC

Design

Paver size: 18 inches by 36 inches

Requires concrete base

Specification source: NYC DOT Standard Specifications section 6.06 LP

Sustainability Opportunities

See sustainability opportunities for UNTINTED CONCRETE

Hexagonal Asphalt Pavers

USAGE: OPTIONAL

Asphalt pre–cast into hexagonally–shaped pavers.

Hexagonal asphalt paver sidewalk: Columbus Avenue at West 66th Street, Manhattan

Benefits

Widely–used paver for New York City public spaces conveys park–like character

Interlocking hexagonal shape fits tightly together and resists shifting and buckling

This material is widely available and cost effective

Dark color hides dirt and stains

Hexagonal pavers are relatively easy to reset or replace, especially for utility access

Asphalt pavers can be recycled

Considerations

Unit pavers can become loose over time and will require regular maintenance

Application

Hexagonal asphalt pavers are appropriate for sidewalks adjacent to parks or plazas.

Use of this material generally requires a maintenance agreement

Design

Paver size: 8 inches between parallel sides

Can be sand–set for easier installation or mortar–set for stronger structural properties

Specification source: NYC DOT Standard Specifications sections 3.04, 6.60

Sustainability Opportunities

High recycled asphalt (RAP) content

Granite Slabs

USAGE: HISTORIC

Historic stone paver, with varieties of color, texture and veining. Can be cut to extremely large sizes to span underground vaults.

Granite slab sidewalk: Hudson Street at Dominick Street, Manhattan

Benefits

Reinforces historic character

Adds distinction and visual enhancement to sidewalk

Stone conveys connection to natural environment

Considerations

Not intended to support heavy vehicles when spanning underground vaults

Difficult to repair or patch in sections

Application

This material is standard in historic districts or other areas with existing granite pavers where historic fabric remains intact, as per the LPC guidelines

Adjacent property owners are generally responsible for maintaining this material in Landmark districts

Design

Granite: to match size and color of existing flags, 3–inch minimum thickness

Slip resistance: minimum 0.60 coefficient of friction wet

Specification sources: LPC guidelines, NYC DOT Standard Specifications section 6.04

Sustainability Opportunities

Salvaged granite slabs

Granite Block

USAGE: OPTIONAL

Historic smooth–finish granite block unit pavers often referred to as "cobblestones," commonly used throughout New York City in the 19th Century.

Cobblestones used in a furnishing zone: Battery Park City, Manhattan

Benefits

Visually delineates separation of street uses

Stones convey connection to natural environment

Cobblestones are relatively easy to remove and reset, especially for utility access

Considerations

Stones can become loose over time and will require regular maintenance

Can be slippery when wet

Uneven surface can hinder pedestrian and disabled persons' mobility

Application

Can be used on streets where pedestrians will not typically be forced to walk in the furnishing zone

Use of this material generally requires a maintenance agreement

Design

Should be sand–set for easier installation and greater permeability wherever impermeable installation generates stormwater runoff

Can be mortar set for stronger structural properties

The area within 18 inches of the curb should be kept free of obstructions

Specification source: NYC DOT Standard Specifications sections 2.06, 6.06

Sustainability Opportunities

Salvaged cobbles

Permeable installation

Concrete Cobbles

USAGE: OPTIONAL

Precast concrete cobbles designed to simulate granite block pavers.

Concrete cobble (Credit: Cobble Systems®)

Benefits

See benefits of GRANITE PAVERS (3.4.1)

Less expensive than natural stone alternatives

Considerations

See considerations for GRANITE PAVERS

Application

See application guidance for GRANITE PAVERS

Use of this material generally requires a maintenance agreement

Design

See design guidance for GRANITE PAVERS

Specification source: NYC DOT Standard Specifications section 6.06

Sustainability Opportunities

See sustainability opportunities for GRANITE PAVERS

Modular Cobblestones

USAGE: OPTIONAL

A pre–assembled grid of smooth saw–cut finish granite cobbles fastened to a sturdy backing and installed as modular tiles.

Modular cobblestone pedestrian street: Broad Street at Wall Street, Manhattan

Benefits

Easier to install and maintain than traditional cobblestone

Smooth, saw–finish stones do not hinder pedestrian or cyclist mobility

Considerations

Exact lifecycle of product is unknown

Impermeability generates stormwater runoff

Application

This material is appropriate for furnishing zones in high–traffic areas

Consider permeable paving options adjacent to trees and planted areas

Use of this material generally requires a maintenance agreement

Design

Requires concrete base

Various colors and styles available

Specification source: NYC DOT Standard Specifications section 6.06 A

Square Asphalt or Concrete Pavers

USAGE: OPTIONAL

Precast square–shaped asphalt pavers.

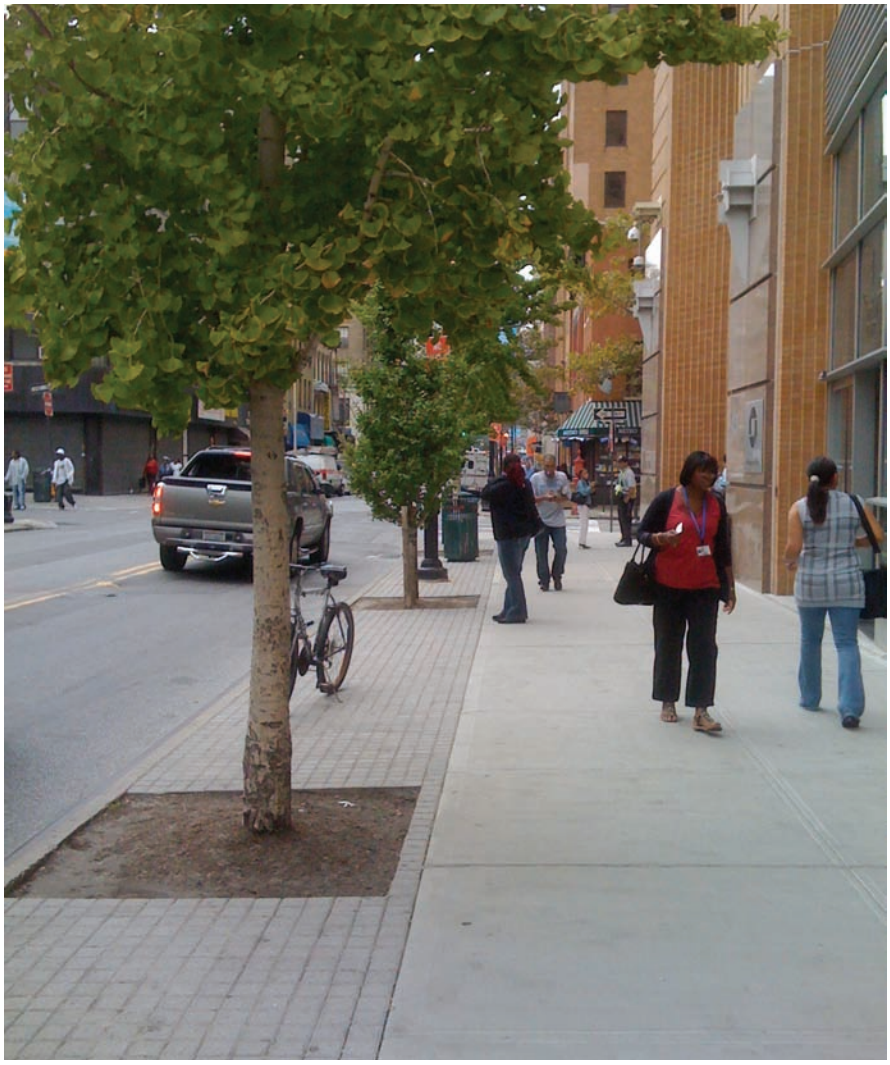

Square asphalt pavers in a furnishing zone: Willoughby Street at Duffield Street, Brooklyn

Benefits

This material is widely available and cost effective

Relatively easy to reset or replace, especially for utility access

Asphalt pavers can be recycled

Considerations

Unit pavers can become loose over time and will require regular maintenance

Application

Can be used on streets where pedestrians will not typically be forced to walk in the furnishing zone

Use of this material generally requires a maintenance agreement

Design

Paver size: 8 inches by 8 inches

Should be sand–set for easier installation and greater permeability wherever impermeable installation generates stormwater runoff

Can be mortar set for stronger structural properties

The area within 18 inches of the curb should be kept free of obstructions

Specification source: NYC DOT Standard Specifications section 6.6 A

Sustainability Opportunities

High recycled asphalt (RAP) content

High SRI value coloring

Concrete with Exposed Glass Aggregate

USAGE: OPTIONAL

Select surface aggregates (such as colored glass or decorative pebbles) embedded and fully adhered to concrete, either poured and cast–in–place as traditional concrete sidewalk, or as precast unit pavers.

Poured, cast–in–place concrete with exposed glass aggregate: Brooklyn Plaza, Brooklyn

Benefits

Decorative glass adds distinction and visual enhancement to concrete

Increases slip resistance of surface

As precast pavers, relatively easy to reset or replace, especially for utility access

Considerations

Unit pavers can become loose over time and will require regular maintenance

Application

The material, when poured and cast–in–place, is appropriate for all furnishing zones and plazas

When installed as precast pavers, it can be used on streets where pedestrians will not typically be forced to walk in the furnishing zone

When cast–in–place, should not be used where frequent utility cuts are likely

Use of this material generally requires a maintenance agreement

Design

Slip resistance: minimum 0.60 coefficient of friction wet

Joint: simulated saw–cut joint scoring

Pavers should be sand–set for easier installation and greater permeability wherever impermeable installation generates stormwater runoff

Pavers can be mortar set for stronger structural properties

The area within 18 inches of the curb should be kept free of obstructions

When used as pavers, paver size: 8 inches by 8 inches

When poured, may require metal reinforcement bars as specified by NYC DOT

Unlimited color and aggregate mix options available

Specification source: NYC DOT Standard Specifications sections 4.13 EG, item numbers 4.13 EGA (for four–inch sidewalks), 4.13 EGB (for seven–inch sidewalks), 6.47 EGA8 (for pavers)

Sustainability Opportunities

Supplementary cementitious materials (SCM)

High SRI value coloring

Recycled glass or reclaimed aggregates

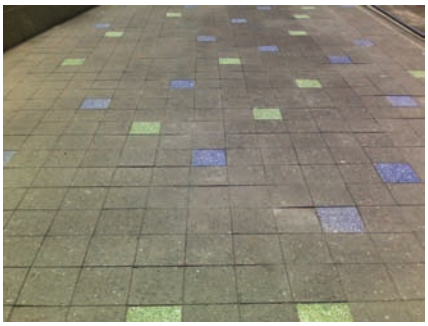

Concrete pavers with exposed blue and green glass aggregate (shown interspersed with black asphalt pavers): Hudson River Park, Manhattan

Untinted Concrete

USAGE: STANDARD

Mixture comprised of cement(s), aggregate(s), water, and other chemical admixtures, smoothed and then allowed to harden, forming a solid curb.

Typical concrete curb: Beach 73rd Street, Queens

Typical untinted concrete curb with steel facing: West 114th Street and Morningside Avenue, Manhattan

Benefits

This material is widely available and cost effective

Can easily be cast on site to fit curved sidewalk profiles

Cast–in–place curbs are more resistant to displacement than stone alternatives

Considerations

Vulnerable to breakage if repeatedly mounted by heavy vehicles

Application

This material is standard for any street with untinted concrete sidewalks

This material is generally maintained by NYC DOT

Design

Size: 6 inches wide on top, 8 inches wide on bottom, 18 inches deep

Expansion joints of curb should line up with expansion joints of sidewalk

Steel facing should be used on streets where repeated mounting by heavy vehicles may cause damage.

May require metal reinforcement bars as specified by NYC DOT

Specification source: NYC DOT Standard Specifications section 4.08, 3.05

Steel–faced specification source: NYC DOT Standard Specifications section 2.13, 3.05, 4.09

Detail source: NYC DOT Standard Details drawing# H–1044

Steel–faced detail source: NYC DOT Standard Details drawing# H–1010

Sustainability Opportunities

Supplementary cementitious materials (SCM)

Salvaged or recycled steel facing

4.1 DOT–ApprovedStreet–Lighting Combinations

Luminaires	Standard Poles			Optional Poles					Historic Poles		
	Davit	Octagonal	Round	Flatbush	Alliance	TBTA	WM	Fulton	Type M	Type F	Bishops Crook
Cobra Head	●	●	●				●				
Stad	●	●	●	●		●	●				
Fulton								●			
Alliance					●						
Helm	●	●	●	●		●	●				
Teardrop				●		●			●	●	●
Shielded Teardrop						●					

● This combination of an optional pole with the Teardrop or Shielded Teardrop luminaire creates a historic light

4.2 DOT–Approved Pedestrian–Lighting Combinations

Luminaires	Standard Poles			Optional Poles			Historic Poles	
	Davit	Octagonal	Round	TBTA	Fulton	Flushing Meadows	Type B	World's Fair
Cobra Head	●	●	●					
Stad	●	●	●	●				
Fulton					●			
Flushing Meadows						●		
Helm	●	●	●	●				
Teardrop				●				
Shielded Teardrop				●				
Type B							●	
World's Fair								●

● This combination of an optional pole with the Teardrop or Shielded Teardrop luminaire creates a historic light

Specifications

For design criteria, technical information, finishes, and color specification, refer to *Bureau of Traffic Division of Streetlighting* Specifications. The latest edition is available from the NYC Department of Transportation.

Cutoff

Outdoor luminaires may be categorized according to the four classifications established by the IESNA of full cutoff, cutoff, semi–cutoff, and non–cutoff to distinguish the range in quantity of upward light and light above a horizontal plane emitted by a light source.

- **Full cutoff**: Full cutoff fixtures do not emit any upward light (at or above 90 degrees) and up to 10% of their light at or above 80 degrees. They create the narrowest spread of light.
- **Cutoff**: Cutoff fixtures emit up to 2.5% of their light upward (at or above 90 degrees) and up to 10% of their light at or above 80 degrees. They create a slightly wider spread of light.
- **Semi Cutoff**: Semi–cutoff fixtures emit up to 5% of their light upward (at or above 90 degrees), and up to 20% of their light at or above 80 degrees. They create a wider spread of light.
- **Non Cutoff**: Non–cutoff fixtures emit light in all directions. They create the widest spread of light.

Spacing/Typical

X:Y: The spacing of streetlights is dependant on several factors, including the height of the pole, street width, the amount of light the fixture provides, and the lighting levels necessary for the particular street classification. The information provided in this chapter is intended as a guideline to indicate that additional poles and/or fixtures may be required in the selection of certain luminaires.

The spacing between poles is described as a ratio in comparison to the Standard luminaire and pole (SLP), which is currently the Cobra Head luminaire on a round, octagonal, or davit pole. A ratio of 1:1 indicates that an equal number of poles and luminaires would be required for replacement. A ratio of ½:1 indicates twice as many luminaires and poles would be required to achieve similar lighting levels as the SLP.

Lighting Levels

Lighting levels are based on the guidelines established by the IESNA. All lighting designs must be reviewed and approved by NYC DOT engineers.

Cobra Head with Standard Poles
Poles shown here are the standard poles provided, tested, and maintained by NYC DOT.

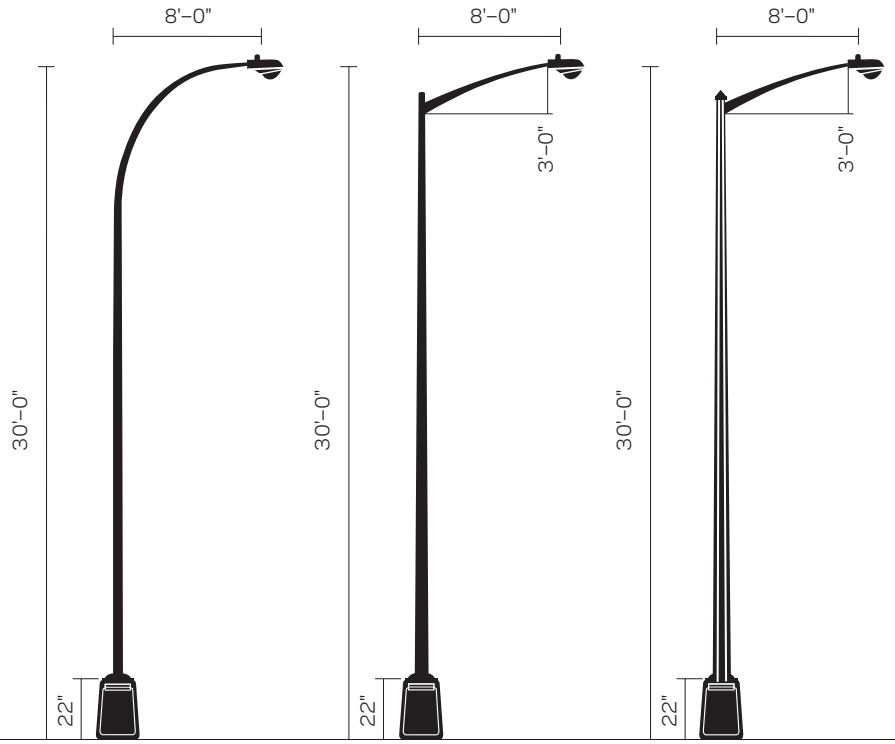

Davit

Round

Octagonal

Stad

USAGE: OPTIONAL

The Stad luminaire was introduced on the Robert F. Kennedy Bridge (formerly the Triboro Bridge). The design of the luminaire provides a contemporary option to the standard Cobra Head at an additional cost.

Applications

Commercial districts

Single or twin mounting

Lamping/Optics

100W HPS or 150W HPS

Cutoff or Semi–Cutoff, IES Type II or III

Material/Color

Aluminum/silver, black and green

Cost Compared to SLP

$$$$

Spacing/Typical

1: 1

Stad luminaire TBTA pole: Robert F. Kennedy Bridge, Manhattan

Stad with Standard Poles
Standard poles are provided and maintained by NYC DOT.

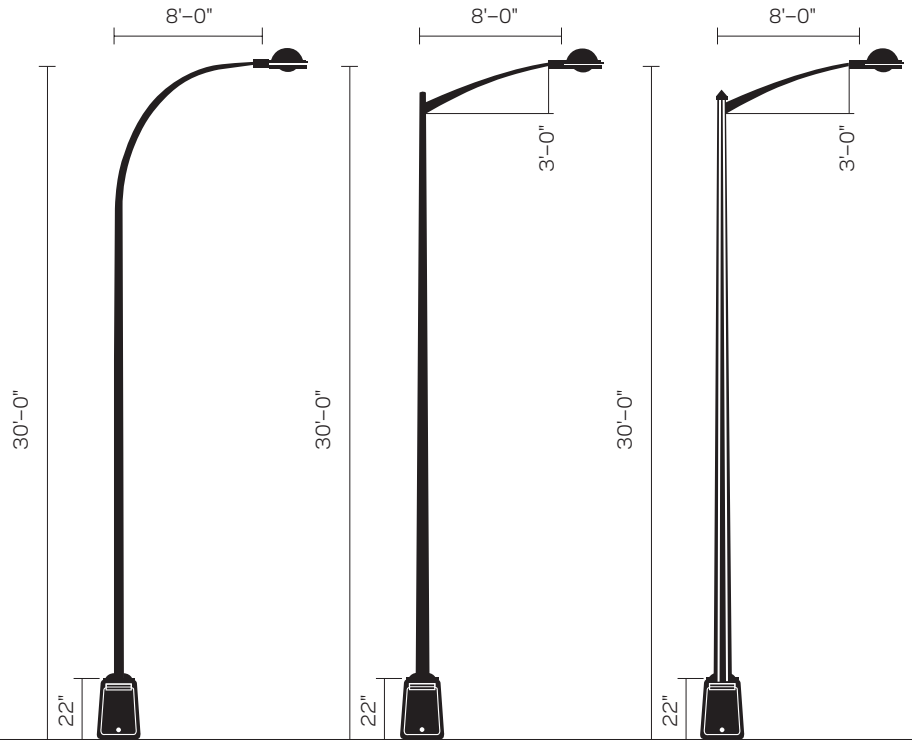

Davit Round Octagonal

Stad with Optional Poles
Optional poles require additional funding.

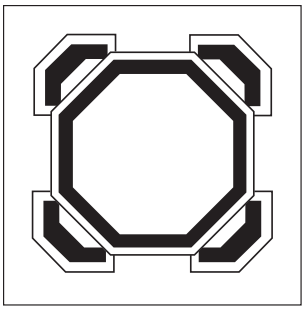

Plan view, WM only

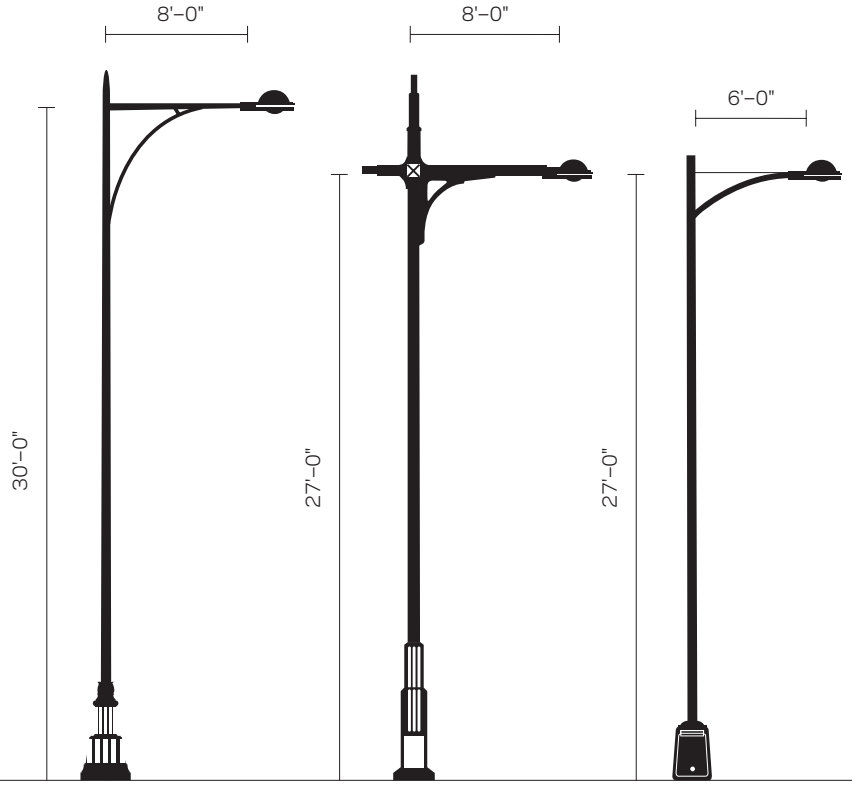

Flatbush Avenue TBTA WM Pole

Fulton

USAGE: OPTIONAL

The Fulton luminaire was selected for installation on the Fulton Street Mall in fall 2008. The design of the luminaire provides a contemporary option to the standard Cobra Head at an additional cost.

Applications

Commercial districts

Roadway width of 36 feet or less

Lamping/Optics

100W HPS or 150W HPS

Cutoff, IES Type II or III

Material/Color

Aluminum/silver

Cost Compared to Standard Light

$$$$

Spacing/Typical

¾: 1

Fulton luminaire and pole (Credit: Hess America)

Fulton luminaire and pole (Credit: Hess America)

Fulton Luminaire and Pole
No standard NYC DOT pole options.

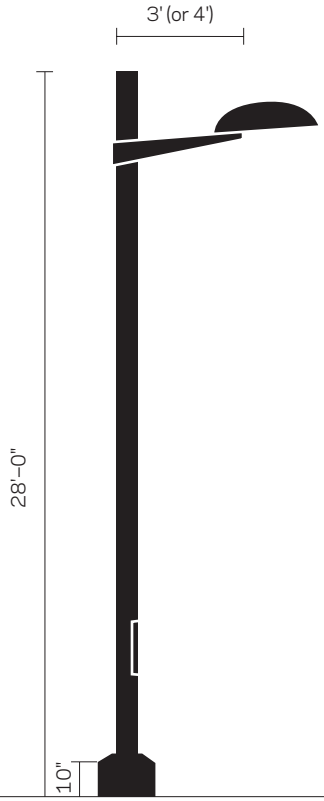

Fulton Head

Alliance

USAGE: OPTIONAL

The Alliance luminaire was originally introduced in the Lower Manhattan historic financial district by the Downtown Alliance business improvement district. The design of the luminaire provides a contemporary option to the standard Cobra Head at an additional cost.

Applications

Commercial districts

Roadways with width of 36 ft or more

Lamping/Optics

100W HPS, 150W HPS

Cutoff, or semi–cutoff, IES Type II or III

Material/Color

Steel/silver and black

Cost Compared to SLP

$$$$$

Spacing/Typical

⅔: 1

Alliance luminaire and pole: Murray Street, Manhattan

Alliance Luminaire and Pole

No standard NYC DOT pole options.

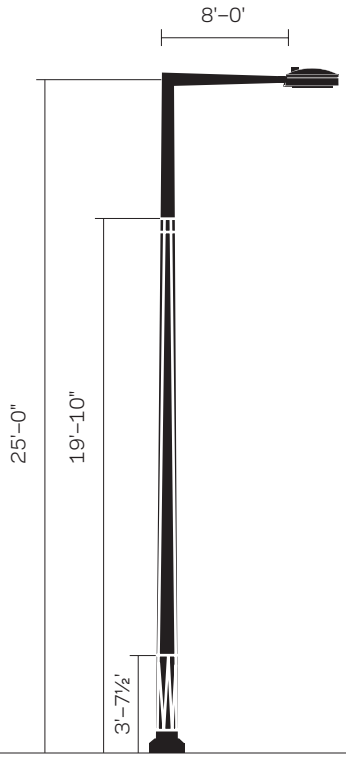

Alliance

Helm

USAGE: OPTIONAL

The Helm luminaire was piloted by NYC DOT on Queens Boulevard in 2008. The design of the luminaire provides a contemporary option in place of the standard Cobra Head at an additional cost.

Applications

Commercial districts

Lamping/Optics

100W HPS or 150W HPS

Curved sag glass optics

Cuttoff, or semi–cutoff, IES Type II or III

Material/Color

Aluminum/silver, black, brown and green

Cost Compared to SLP

$$$$$

Spacing/Typical

⅔: 1

Helm luminaire and WM pole: 39th Street, Queens

Helm with Standard Poles
Standard poles are provided and maintained by NYC DOT.

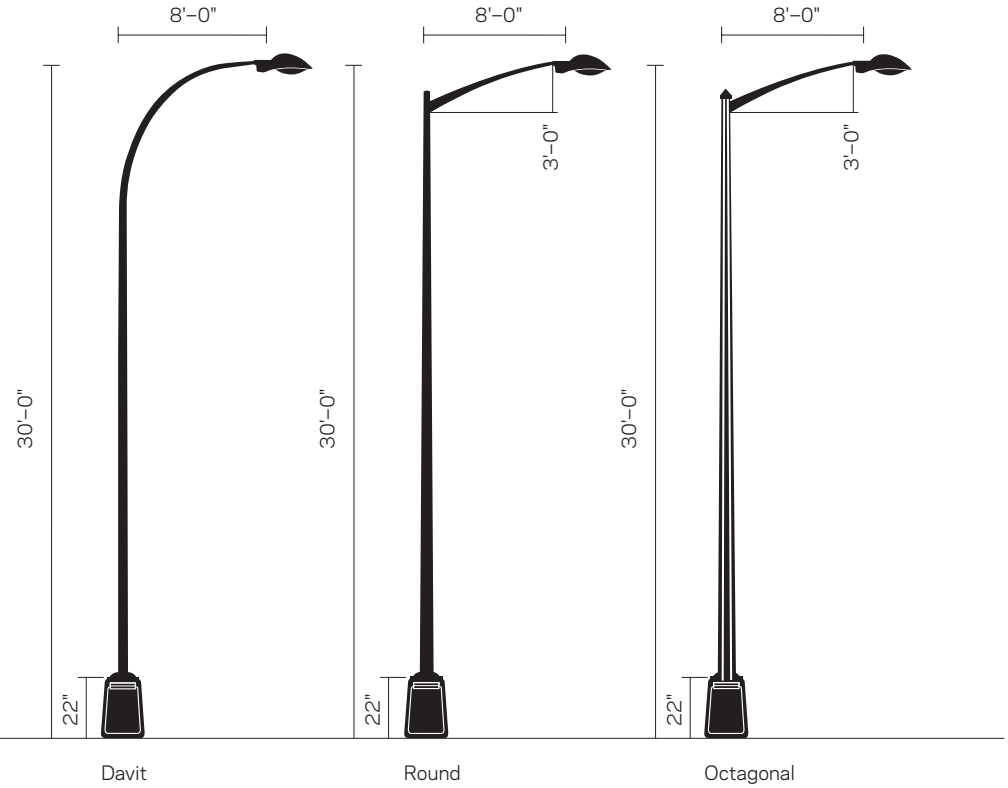

Helm with Optional Poles
Optional poles require additional funding.

Arms

Type 1 for WM Pole

Type 2 for WM Pole

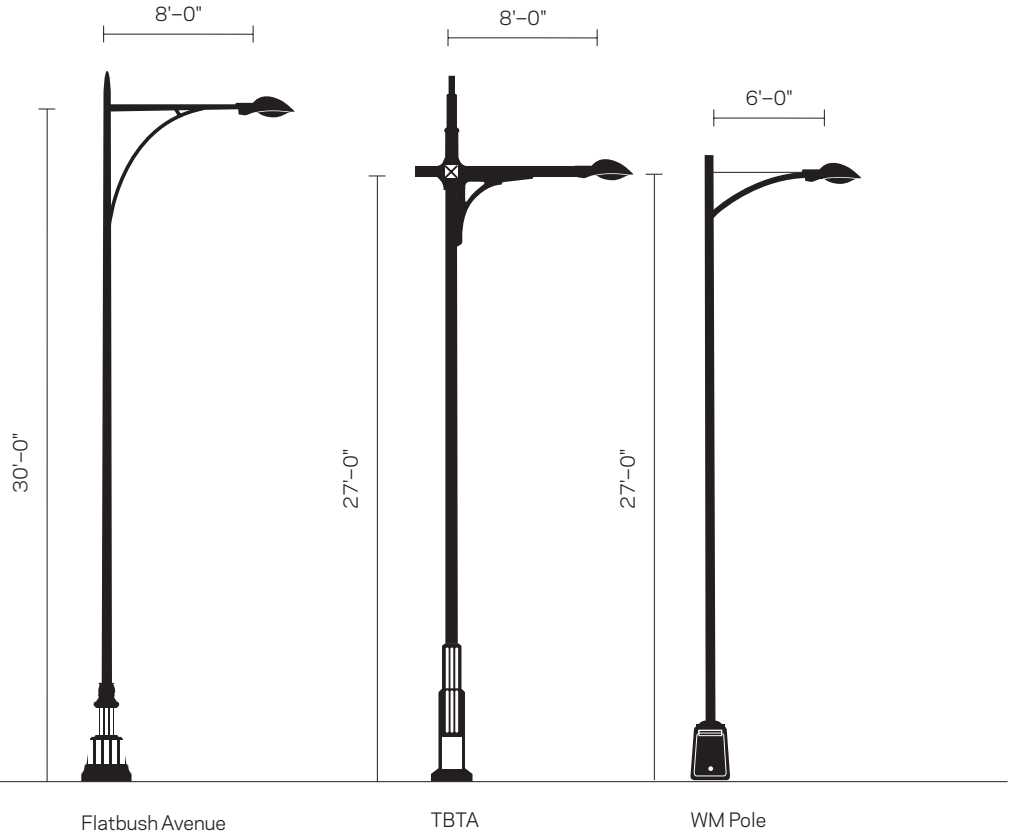

Flatbush Avenue

USAGE: OPTIONAL

The Flatbush Avenue pole was installed in 1988 by the Economic Development Corporation on Flatbush Avenue in Brooklyn. The Flatbush Avenue pole can support both historic and optional luminaires.

Applications

Commercial and residential streets

Streets with roadway width of 36 feet or more

Single or twin mounting (center medians)

Lamping/Optics

Teardrop: Non–Cutoff, IES Type III or V (250W HPS)

Shielded Teardrop: Cutoff, IES Type III or V (250W HPS)

Stad or Helm: Cutoff or Semi–Cutoff, IES Type II or III (150W HPS)

Material/Color

Fabricated steel pole/black, brown, and green

Cost Compared to SLP

$$

Spacing/Typical

Teardrop or Shield Teardrop: ⅔: 1

Stad: 1:1

Historic Teardrop luminaire and Flatbush pole: 49th Street, Queens

Historic Luminaire with Flatbush Avenue Pole

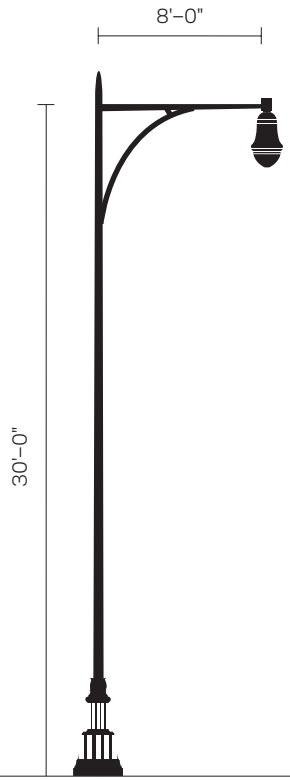

TBTA

USAGE: OPTIONAL

The TBTA (Triboro Bridge Tunnel Authority) was introduced in the 1950s and '60s for mid–twentieth–century bridge construction projects such as the Robert F. Kennedy Bridge (formerly the Triboro Bridge). The TBTA replaced wooden lamp posts which lit parkways during the 1920s and '30s. Today, the TBTA can support both historic and optional luminaires.

Applications

Commercial and residential streets

Single or twin mounting

Streets with roadway width of 36 feet or more

Lamping/Optics

Teardrop: Non–Cutoff, IES Type III or V (250W HPS)

Shielded Teardrop: Cutoff, IES Type III or V (250W HPS)

Stad: Cutoff or Semi–Cutoff, IES Type II or III (150W HPS)

Material/Color

Fabricated steel pole/black, brown and green

Cost Compared to SLP

$$$$$

Spacing/Typical

Teardrop or Shielded Teardrop: ⅔: 1

Stad: 1: 1

Historic Shielded Teardrop luminaire and TBTA Pole: 40th Street, Manhattan

Historic Luminaires with TBTA Pole

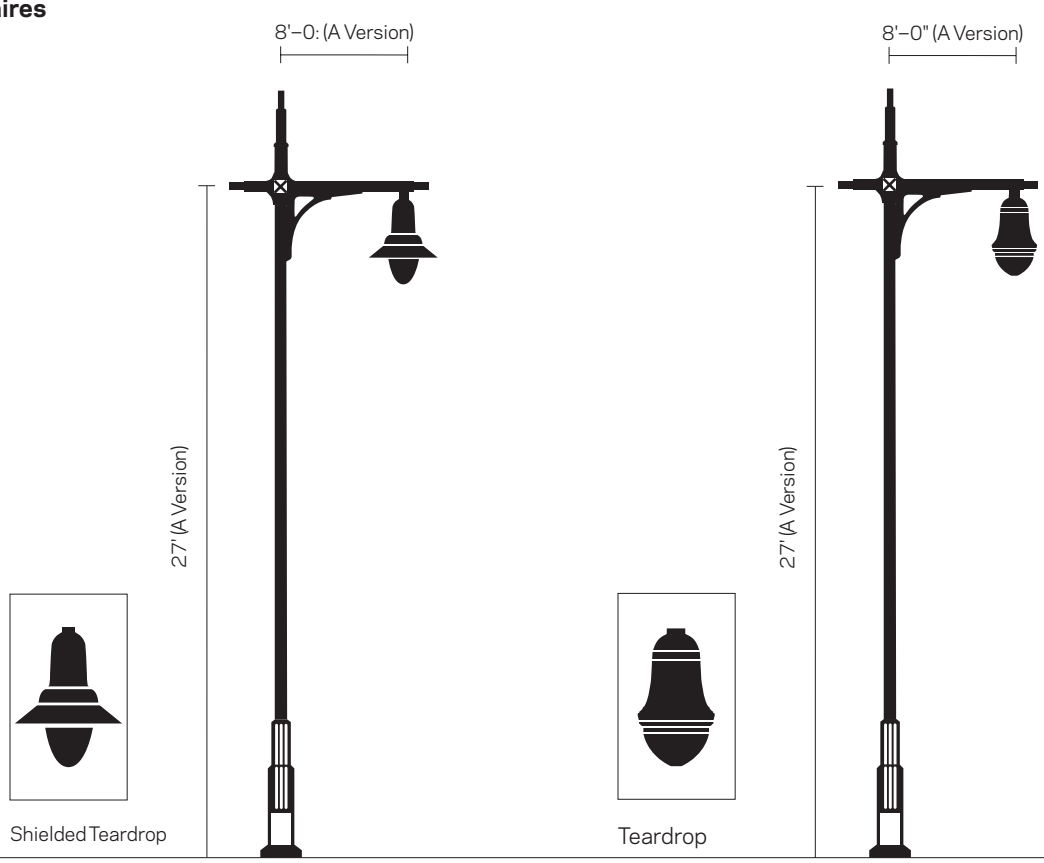

Type M

USAGE: HISTORIC

The Type M pole, originally known as the Mast–Arm post, was introduced in 1908 for wide streets at corners on Broadway north of Columbus Circle and on Seventh Avenue north of Central Park. Bracket versions of the Mast–Arm were also attached to the facades of buildings. The reproduction of the Mast–Arm was introduced in the late twentieth century as the Type M pole.

Applications

Selected historic districts

Streets with roadway width of 36 feet or more

Single or twin mounting

Lamping/Optics

Non Cutoff, IES Type III or V

Teardrop luminaire, 250W HPS

Material/Color

Ductile iron pole/black, brown and green

Cost Compared to SLP

$$$$$

Spacing/Typical

⅔: 1

Historic Teardrop luminaire and Type M pole: West 11th Street, Manhattan

Historic Luminaire with Type M Pole

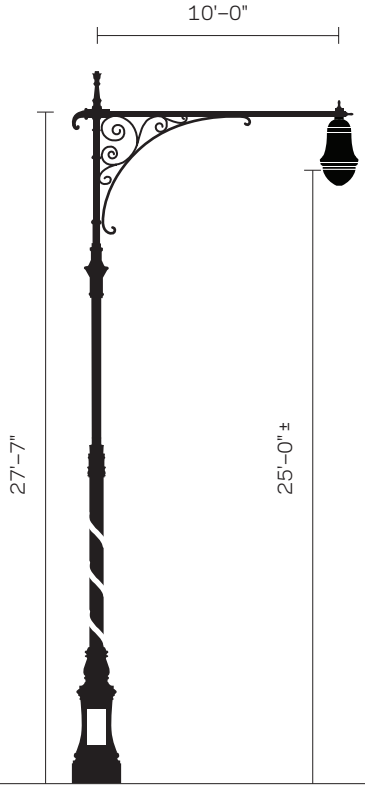

Bishops Crook

USAGE: HISTORIC

The Bishops Crook was the first of a number of decorative street lights to be introduced as early as 1900 on narrow city streets. Bracket versions of the Bishops Crook were also attached to the facades of buildings. The reproduction of the Bishops Crook was introduced in 1980 at Madison Avenue and 50th Street outside the Helmsley Palace Hotel, which is known today as the New York Palace Hotel.

Applications

Selected historical districts

Streets with roadway width of 36 feet or less

Lamping/Optics

Non–Cutoff, IES Type III or V

Teardrop luminaire, 250W HPS

Material/Color

Ductile Iron pole/black, brown and green

Cost Compared to SLP

$$$$$

Spacing/Typical

½: 1

Historic Teardrop luminaire and Bishops Crook pole: Nassau Street, Manhattan

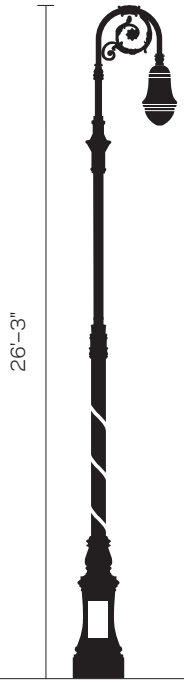

This Page Intentionally Left Blank

NYC DOT is no longer planning to pilot the Type L design

City Light

USAGE: PILOT

The City Light is not yet available for use, but is included in the Street Design Manual because it is undergoing engineering review. It is anticipated that the prototype of the light will be available for testing on city streets beginning Fall 2010. An international design competition to develop a new standard streetlight for New York City was held in 2004. The City Light design was selected as the winning entry. NYC DOT, the Office for Visual Interaction, and NYC DDC are working together to develop the proposed design into a luminaire.

Applications

Commercial or Residential districts
TBD

Lamping/Optics

LED

Material/Color

TBD

Cost Compared to SLP

TBD

Spacing/Typical

TBD

City Light pilot rendering

City Light pilot rendering

This Page Intentionally Left Blank

NYC DOT is no longer planning to pilot the LED Type A design

Cobra Head

USAGE: STANDARD

The Cobra Head luminaire was originally introduced by the Westinghouse and General Electric companies in 1957 to accompany an aluminum post designed in 1958 by Donald Deskey and first installed in 1963. Additional poles were later introduced to support the Cobra Head luminaire: the Octagonal, Round, and Davit. The 70W and 100W Cobra Head luminaires are the current standard for New York City pedestrian lighting.

Applications

Parks, esplanades, pedestrian bridges, walkways, ramps, under elevated trains and bikeways

Single mounting

Lamping/Optics

70W HPS, 100W HPS

Medium Semi–Cutoff, IES Type II

Material/Color

H.D.G. Steel/silver

Cost Compared to SLP

Cobra Head is the SLP

Spacing/typical

1:1

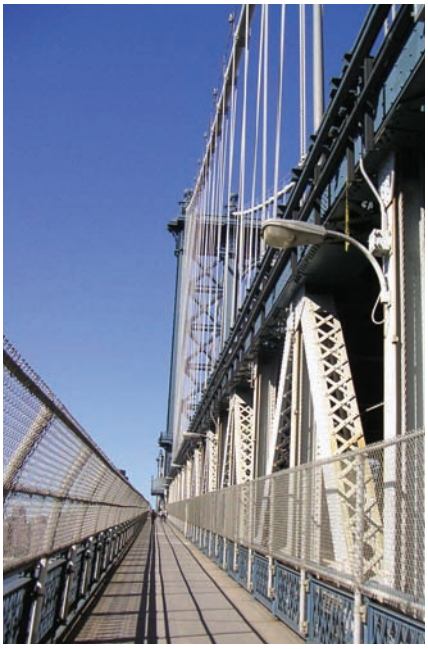

Cobra Head luminaire: Manhattan Bridge, Manhattan

Cobra Head with Standard Poles

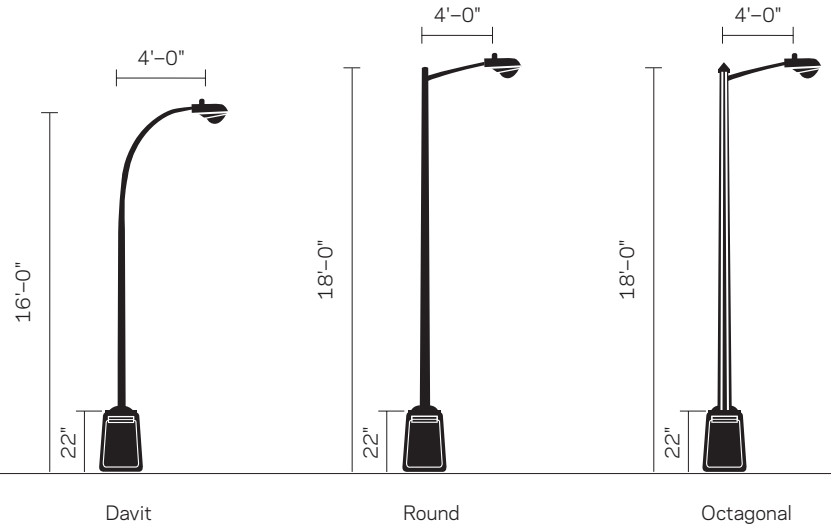

Stad

USAGE: OPTIONAL

The Stad luminaire was introduced on the Robert F. Kennedy Bridge in 2008. The design of the luminaire provides a contemporary option to the standard Cobra Head at an additional cost.

Applications

Parks, plazas, esplanades, pedestrian bridges, walkways, and bikeways

Lamping/Optics

70W HPS or 150W HPS

Sag or flat lens optics

Cutoff or Semi–Cutoff, IES Type II or III

Material/Color

Aluminum/silver, black and green

Cost Compared to SLP

$$$$

Spacing/Typical

1:1

Stad luminaire TBTA pole: Robert F. Kennedy Bridge, Manhattan

Stad with Standard Poles

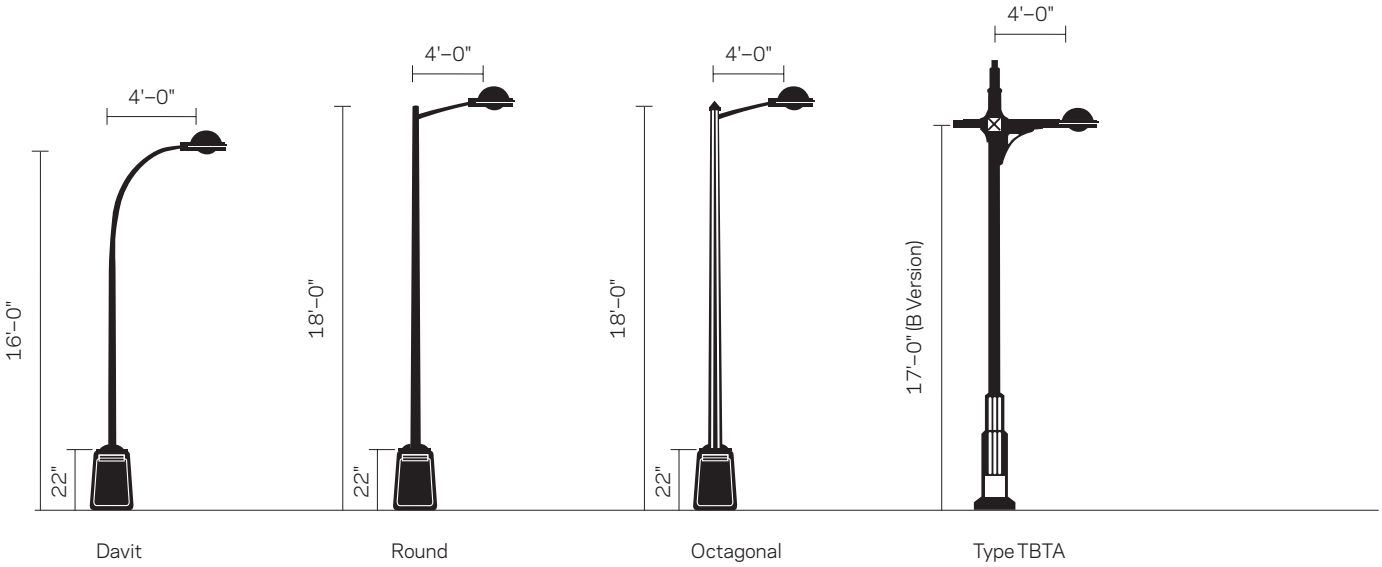

Fulton

USAGE: OPTIONAL

The Fulton luminaire was selected for installation on the Fulton Street Mall in fall 2008. The design of the luminaire provides a contemporary option in place of the standard Cobra Head at an additional cost.

Applications

Parks, plazas, esplanades, pedestrian bridges, walkways, and bikeways

Lamping/Optics

70W HPS, 100W HPS

Cutoff, IES Type II or III

Material/Color

Aluminum/silver and black

Cost Compared to SLP

$$$$

Spacing/Typical

¾: 1

Fulton luminaire and pole (Credit: Hess America)

Fulton Luminaire and Pole
No standard NYC DOT pole options.

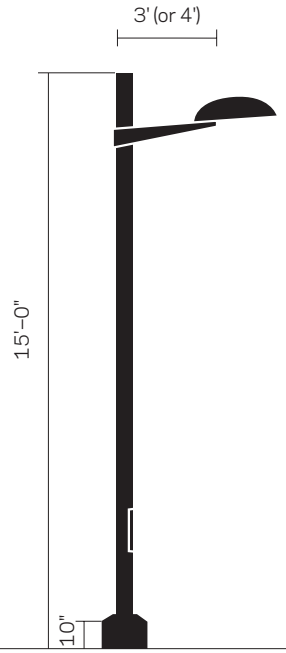

Fulton Head

World's Fair

USAGE: HISTORIC

The World's Fair luminaire and pole was first installed in 1964 during the World's Fair held at Flushing Meadows Park in Queens. The pole is now installed in many city parks, in plazas, and along walkways and bikeways.

Applications

Parks, plazas, esplanades, pedestrian bridges, walkways, and bikeways

Lamping/Optics

100W HPS & 150W HPS

Non–Cutoff, IES Type V

Type 2085 luminaire

Material/Color

Steel/black, brown, or green

Cost Compared to SLP

$

Spacing/Typical

⅔: 1

World's Fair luminaire and pole: Battery Park, Manhattan

World's Fair Luminaire and Pole

TBTA

USAGE: OPTIONAL

The TBTA (Triboro Bridge Tunnel Authority) pole was originally introduced in the 1950s and '60s for mid–twentieth–century bridge construction projects such as the Robert F. Kennedy Bridge (formerly known as the Triboro Bridge). The TBTA replaced wooden lamp posts which lit parkways during the 1920s and '30s. The pole was recently installed as pedestrian lighting along the Hudson River Park Greenway and can support both historic and optional luminaires. Historic luminaires render the lights historic.

Applications

Parks, plazas, esplanades, pedestrian bridges, walkways, and bikeways

Lamping/Optics

Teardrop: Non–Cutoff, IES Type III or V (100W HPS or 150W HPS)

Shielded Teardrop: Cutoff, IES Type III or V (100W HPS or 150W HPS)

Material/Color

Fabricated steel/black, brown, or green

Cost Compared to SLP

$$$$$

Spacing/Typical

For Teardrop or Shielded Teardrop: ⅔: 1

Historic Shielded Teardrop luminaire and TBTA pole: Hudson River Parkway, Manhattan

Historic Luminaires with TBTA Pole

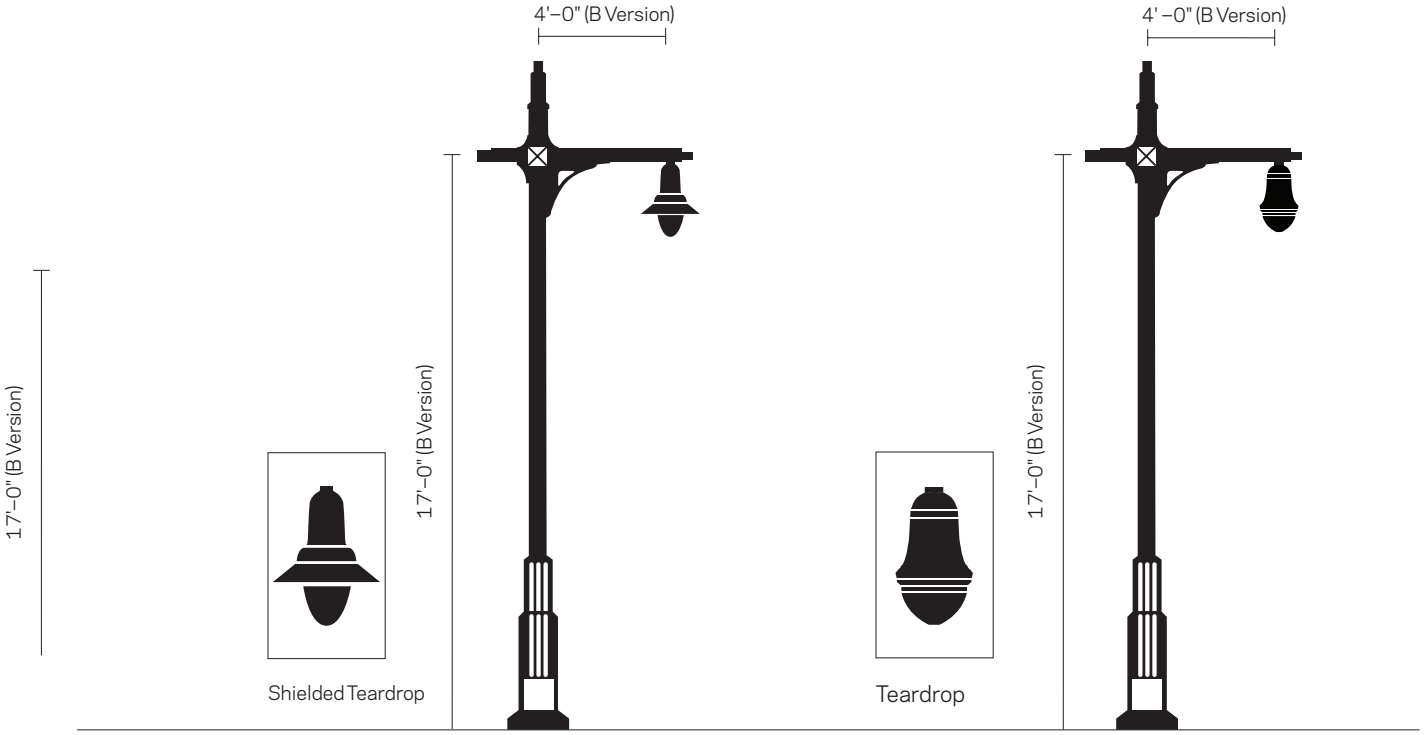

This Page Intentionally Left Blank

NYC DOT is no longer planning to pilot the LED Type A design

This Page Intentionally Left Blank

NYC DOT is no longer planning to pilot the LED Type E luminaire

Bicycle Facilities
A general term denoting improvements and provisions made by public agencies to accommodate or encourage bicycling, including parking and storage facilities, and shared roadways not specifically designated for bicycle use. (AASHTO: *A Policy on Geometric Design of Highways and Streets*)

Bicycle Lane/Bike Lane
A portion of the roadway that has been designated by striping, signing, and pavement markings for the preferential or exclusive use of bicycles. (New York State Vehicle and Traffic Law, Title 1, Article 1, § 102–a)

Bicycle Path/Bike Path
A path physically separated from motorized vehicle traffic by an open space or barrier and either within the highway right–of–way or within an independent right–of–way and which is intended for the use of bicycles. (New York State Vehicle and Traffic Law, Title 1, Article 1, § 102–b)

Bicycle Route/Bike Route
A bikeway designated by the jurisdiction having authority with appropriate directional and informational route markers, with or without specific bicycle route numbers. Bike routes should establish a continuous routing, but may be a combination of any and all types of bikeways. (AASHTO *Guide for the Development of Bicycle Facilities*) In New York City, bike routes are set forth in the New York City Cycling Map and come in three main categories: Bicycle Path, Class 1 (bridge, park or separated on–street path); Bicycle Lane, Class 2 (on–street striped route); and Bicycle Route, Class 3 (on–street signed route).

BID (Business Improvement District)
A not–for–profit corporation made up of property owners and commercial tenants who are dedicated to promoting business development and improving an area's quality of life. BIDs deliver supplemental services such as sanitation and maintenance, public safety and visitor services, marketing and promotional programs, capital improvements, and beautification for the area—all funded by a special assessment paid by property owners within the district. www.ci.nyc.ny.us/html/sbs/html/neighborhood/bid.shtml

Bikeway
A generic term for any road, street, path or way which in some manner is specifically designated for bicycle travel, regardless of whether such facilities are designated for the exclusive use of bicycles or are to be shared with other transportation modes. (AASHTO: *Guide for the Development of Bicycle Facilities*)

Bioswale
A depressed, planted area designed to convey, capture, and filter stormwater runoff and increase rainwater infiltration. These systems are linear. The term "street swale" is used throughout this Manual. (*Florida Field Guide to Low Impact Development*: http://buildgreen.ufl.edu/Fact_sheet_Bioswales_Vegetated_Swales.pdf)

BMP (Best Management Practices)
Schedules of activities, prohibitions of practices, maintenance procedures, and other management practices to prevent or reduce the discharge of pollutants to waters of the United States. BMPs also include treatment requirements, operating procedures, and practices to control plant site runoff, spillage, or leaks, sludge or waste disposal, or drainage from raw material storage. www.epa.gov/npdes/pubs/cgp_appendixa.pdf

BRT (Bus Rapid Transit)
A flexible, high performance rapid transit mode that combines a variety of physical, operating, and system elements into a permanently integrated system with a quality image and unique identity. (Levinson et al., *Bus Rapid Transit: Implementation Guidelines*, TCRP Report 90–Volume II)

BRT (Bus Rapid Transit) Route
A road designed to improve the speed, reliability, and overall attractiveness of bus service, and that carries bus lines designated as "Select Bus Service" by MTA NYCT/MTA Bus and/or other services identified as BRT. This also includes roads that are designated for BRT service in the future, through the BRT Master Plan or other planning documents.

Bus
Every motor vehicle having a seating capacity of more than fifteen adults, in addition to the operator, and used for the transportation of persons, and every charter bus, interstate bus, intrastate bus, school bus, and sight–seeing bus, regardless of seating capacity. (Rules of the City of New York, Title 34, Chapter 4, § 4–01(b))

Bus Route
A street that carries one or more regularly scheduled local, commuter, or intercity bus lines running on a published schedule.

Busway
A physically separated lane reserved for bus traffic.

Private Road
Every way or place in private ownership and used for vehicular travel by the owner and those having express or implied permission from the owner, but not by other persons. (New York State Vehicle and Traffic Law, Title 1, Article 1, § 133)

Public Highway
Any highway, road, street, avenue, alley, public place, public driveway, or any other public way. (New York State Vehicle and Traffic Law, Title 1, Article 1, § 134)

R

Rain Garden
A planted depression that captures and absorbs rainwater that would otherwise flow into a storm drain. (*Florida Field Guide to Low Impact Development*: http://buildgreen.ufl.edu/Fact_sheet_Bioretention_Basins_Rain_Gardens.pdf)

Restricted Use Street
A legally mapped street to be permanently closed to motor vehicles by the Department of Transportation, and open to use by pedestrians. (Rules of the City of New York, Title 34, Chapter 4, §4–12(r)(4))

Revocable Consent
A grant by the city of a right, revocable at will…to an owner of real property or, with the consent of the owner, to a tenant of real property to use adjacent inalienable property (usually, streets or sidewalks) for such purposes as may be permitted by rules of NYC DOT or NYC DoITT. (For full definition see NYC Charter, Section 362(c)(2); Rules of the City of New York, Title 34, Chapter 7, Section 7–01)

Right of Way
The right of one vehicle or pedestrian to proceed in a lawful manner in preference to another vehicle or pedestrian approaching under such circumstances of direction, speed, and proximity as to give rise to danger of collision unless one grants precedence to the other. (New York State Vehicle and Traffic Law, Title 1, Article 1, § 139)

Right–of–Way
A general term denoting land, property, or interest therein, usually in a strip, acquired for or devoted to transportation purposes. (AASHTO: *Guide for the Development of Bicycle Facilities*)

Road
An open way for the passage of vehicles, persons, or animals on land. (FHWA)

Roadbed
The graded portion of a highway within top and side slopes, prepared as a foundation for the pavement structure and shoulder. (FHWA)

Roadway
That portion of a street designed, improved, or ordinarily used for vehicular travel, exclusive of the shoulder and slope. (Rules of the City of New York, Title 34, Chapter 2, §2–01)

S

Shared Use Path
A bikeway physically separated from motorized vehicular traffic by an open space or barrier and either within the highway right–of–way or within an independent right–of–way. Shared use paths may also be used by pedestrians, skaters, wheelchair users, joggers, and other non–motorized users. (AASHTO *Guide for the Development of Bicycle Facilities*)

Scoring (concrete)
Marking the surface of concrete for visual or textural effect. "Tooled joint" scoring refers to concrete sidewalk flag joints finished with a hand-trowelled border. "Simulated saw-cut joint" scoring refers to concrete sidewalk flag joints finished using a spacer to simulate the appearance of joints cut with a masonry saw.

Sidewalk
That portion of a street, whether paved or unpaved, between the curb lines or the lateral lines of a roadway and the adjacent property lines intended for the use of pedestrians. Where it is not clear which section is intended for the use of pedestrians, the sidewalk will be deemed to be that portion of the street between the building line and the curb. (Rules of the City of New York, Title 34, Chapter 4, § 4–01(b))

Simulated Saw-Cut Joint
See scoring (concrete)

Solar Reflectance Index (SRI)
SRI is a value that incorporates both solar reflectance and emittance in a single value to represent a material's temperature in the sun. SRI quantifies how hot a surface would get relative to standard black and standard white surfaces. It is calculated using equations based on previously measured values of solar reflectance and emittance as laid out in the American Society for Testing and Materials Standard E 1980. It is expressed as a fraction (0.0 to 1.0) or percentage (0% to 100%). (United States Environmental Protection Agency: www.epa.gov/heatisld/resources/glossary.htm)

Source Control
Action to prevent pollution where it originates. www.stormwaterauthority.org/glossary.aspx