LANDLORD INSTRUCTIONS FOR COMPLYING WITH COMMISSIONER'S ORDER TO REMEDIATE LEAD PAINT HAZARDS

1PP

New York City Department of Health & Mental Hygiene - Lead Poisoning Prevention Program

You have been served with a Commissioner's Order to Remediate Nuisance. You are ordered to correct lead paint violations in a dwelling, which you own or manage, within **21 days** of receipt of the Order. The New York City Department of Health and Mental Hygiene (DOHMH) Lead Poisoning Prevention Program (LPPP) identified these violations during an inspection.

LANDLORDS MUST:

Hire an EPA-Certified Lead Abatement Firm to Repair all Violations using approved remediation methods.

- The firm must be certified by the US Environmental Protection Agency (EPA) to perform lead abatement work.
- The firm must use workers who have taken a course in safe work practices developed by the US Department of Housing and Urban Development (HUD) and the EPA. This course is called: **Lead Safety for Remodeling, Repair, and Painting.** Workers who are EPA-certified in lead abatement may also do the work.

Make sure the contractor uses safety standards listed in the New York City Health Code §173.14.

Examples of Health Code safety standards include:

- Cleaning all floors, furniture, draperies, carpets and other objects in the work area with a HEPA (High Efficiency Particulate Air) vacuum before work begins.
- Covering floors, windows, and air vents with 2 layers of plastic sheeting.
- Sealing the work area with plastic sheeting and covering doorways with 2 layers of plastic.
- Cleaning and removing furniture or cleaning and covering furniture with plastic sheeting.
- Using only approved lead remediation methods (see 5PP for prohibited methods which may not be used).
- Using wet methods and HEPA vacuuming for daily and final cleaning.

File a Notification of Commencement of Lead Remediation (yellow form)

- Fill out the notification form completely and sign.
- Fax or hand-deliver the form to the Field Services Unit (FSU) of the LPPP, 1-3 days before work begins. Forms can be faxed to (212) 676-6188 or (212) 676-6144.
- File a new notification if you change the contractor, the dust wipe testing company, or the start date.

Hire an EPA-Certified Lead Inspector to take clearance dust wipe samples when the work is completed (refer to 2PP).

- Results must be faxed or hand delivered to the LPPP by the building owner or the dust wipe testing company within 5 days after work is finished.
- An EPA-Certified Inspector or Risk Assessor that is independent of the contractor must take the samples.

IMPORTANT NOTICE

- **Call 212-676-6379 for more information** about complying with the Commissioner's Order or if you wish to contest the violations. To contest the Order, you must contact the Lead Poisoning Prevention Program within 3 days of receipt of the Order.
- **Failure to comply fully with a Commissioner's Order to Remediate** can result in fines of up to $2,000 per violation.
- **A LPPP inspector may visit the work site unannounced to conduct safety re-inspections.**
- **A tenant CANNOT be evicted for lead paint violations.**
- **Federal law requires that landlords notify** tenants and prospective buyers about any known lead paint in the apartment or house.

Revised 05.27.09

LANDLORD INSTRUCTIONS FOR HIRING
Lead REMEDIATION CONTRACTORS & lead INSPECTORS

New York City Department of Health & Mental Hygiene - Lead Poisoning Prevention Program

2PP

You have been served with a NYC DOHMH Commissioner's Order to Remediate Nuisance and must correct lead paint hazards in the dwelling cited in the order.

The firm you hire to conduct remediation must:

- Possess a certificate of approval issued by the EPA to perform lead-based paint activities.
- Repair all violations using NYC Health Code safety standards.
- Use trained workers to repair lead paint violations. If you choose the wet scraping and re-painting method to conduct repairs, the workers must have either HUD lead safety training or EPA lead abatement training. If you choose a more permanent method to correct the violations the workers must have EPA lead abatement training.
- Remove 'Lead paint' and 'SNC' markings from components stamped by LPPP to identify lead paint violations**.** This should be done in the course of correcting violations or after a contestation has been accepted.

The firm you hire to conduct clearance dust wipe testing must:

- Possess a certificate of approval issued by the EPA to perform lead-based paint activities.
- Use an EPA certified Lead Inspector or Risk Assessor to conduct clearance dust wipe sampling.

How do I find EPA-certified firms and inspectors?

- Call EPA at 732-321-6671 for a list of lead abatement firms and lead evaluation firms.
- Search on the EPA website for certified abatement/inspection firms at: http://cfpub.epa.gov/flpp/
- Look in the yellow pages for lead abatement, environmental services and lead inspections.
- LPPP does not endorse any specific lead abatement contractor, firm, inspector or listing service.

What should I tell a lead abatement contractor who will be repairing the violations?

Tell the contractor to use only approved remediation methods, safety standards, and cleaning methods. The contractor should be familiar with the New York City Health Code.

- Tell the contractor to provide you with:
  - A work plan that describes: how each violation will be corrected, how the contractor will prepare the work area and seal off the rest of the dwelling, how the work area will be cleaned and how long the job will take.
  - References from other building owners who had similar work done.

What should I tell a lead inspector who will be taking dust wipes?

Tell the inspector or risk assessor that they must:

- Be a third-party, who is independent of the building owner and independent of any individual or firm that performs the repair work.
- Use a laboratory with the following credentials:
  - Accreditation by the National Lead Laboratory Accreditation Program (NLLAP).
  - Approval by New York State to analyze the dust samples.
  - Certification by the American Industrial Hygiene Association (AIHA) or the American Association of Laboratory Accreditation (A2LA).
- Provide you with the Environmental Laboratory Approval Number (ELAP) and the AIHA or the A2LA certificate number.

For more information call the New York City Department of Health and Mental Hygiene Lead Poisoning Prevention Program at 212-676-6379.

INSTRUCTIONS FOR EPA CERTIFIED CONTRACTORS & LEAD INSPECTORS

3PP

New York City Department of Health & Mental Hygiene - Lead Poisoning Prevention Program

LANDLORDS

Please read and forward this notice to the EPA certified contractor and lead inspector you hire.

NOTICE TO CONTRACTORS

Contractors must:

- Provide the company name, contact person, phone and fax numbers, company address and EPA certificate number to the building owner before starting the job.
- Sign the Notification of Commencement of Lead Remediation (yellow form).

Contractors should provide a scope of work to the building owner for all lead hazard repairs:

- List all surfaces and components to be remediated as cited in the Commissioner's Order.
- Describe how each hazard will be remediated.
- Provide a start and finish date for the repairs.

Contractors must use the safety standards in New York City Health Code §173.14.

- Be aware that the work site may be inspected at any time by LPPP staff to determine compliance with safety rules and regulations.
- Violations may be issued if safety rules, regulations and/or administrative requirements are not followed.

For full details refer to New York City Health Code §173.14

NOTICE TO LEAD INSPECTORS

If you have been hired to take dust wipe samples when ordered work is finished, you must:

- Follow all regulations set forth by the EPA and NYC Health Code for conducting clearance.
- Be a third-party, who is independent of the building owner and independent of any individual or firm that performs the work.
- Not be an employee of the building owner or the abatement contractor.
- Provide your company name, contact person, phone number, fax number and company address to the building owner before the job starts.
- Provide your EPA Certificate Number to the building owner before the job starts.
- Sign the Notification of Commencement Form (yellow form).
- Collect three dust wipe samples from each room or area where work has been conducted; one wipe sample each from a window well, a window sill and the floor. In addition, dust wipe samples shall be collected from the floor in rooms or areas immediately adjacent to the work area.
- Submit dust wipe samples for analysis to a laboratory accredited by the National Lead Laboratory Accreditation Program (NLLAP) **and** approved by the NYS Environmental Laboratory Approval Program (ELAP).
- Submit clearance dust wipe laboratory reports directly to the New York City Department of Health and Mental Hygiene Lead Poisoning Prevention Program. Reports may be sent by fax to (212) 676-6188 (or 6144) or hand delivered to the Field Support Unit at: 253 Broadway 11th Floor, New York, NY 10007.

NOTICE:

- **Working without proper EPA-certification or failure to follow safety standards can result in fines up to $2000 per violation to the contractor and the building owner.**
- **Falsification of records or documents may result in fines and/or criminal prosecution.**

For more information call the New York City Department of Health and Mental Hygiene Lead Poisoning Prevention Program (LPPP) at 212-676-6379.

LANDLORD INSTRUCTIONS FOR REMEDIATING LEAD PAINT HAZARDS

4PP

New York City Department of Health & Mental Hygiene - Lead Poisoning Prevention Program

LANDLORDS AND CONTRACTORS: The New York City Health Code requires you to repair the violation(s) cited in the Commissioner's Order.

FIX BUILDING PROBLEMS

First things first. As a part of the remediation, you **must** repair any conditions that may cause paint to peel, crack, blister, or chip. Common building problems that damage paint include: water leaks from pipes, roofs, windows, or radiators. Any repair or maintenance work that disturbs paint must be done safely to prevent release of paint dust and debris.

Remediation includes wet scraping and re-painting which is a temporary repair method used to reduce lead-based paint hazards. Components fixed through wet-scraping and re-painting may be subjected to future testing for lead based paint hazards by the Department if they are again found to be peeling, chipping, chalking or flaking.

Abatement is a permanent repair method and includes enclosure, replacement or paint removal to correct lead-based paint hazards.

All surfaces near the work area damaged during remediation or abatement must be brought back to an intact condition and repainted using safe methods.

Please note that any of the below repair methods can be used to comply with the Commissioner's Order issued to you.

Please refer to New York City Health Code §173.14 to review all acceptable methods.

What Methods Can be Used to Correct What Violations

Enclosure Fastening a rigid and durable barrier to cover entire surface area.	**Replacement** Replacing a building component with a new component free of lead-based paint.	**Paint Removal** Removing all lead-based paint from a building component.	***Wet Scraping and Re-Painting** Removing loose paint while components are wet and then re-painting.
Windows: stools (sills), aprons, and casings only	Windows	Windows	Windows - see **Wet Scraping and Re-painting Window friction surfaces below
Doors and door frames	Doors and door frames	Doors and door frames	Doors and door frames
Radiators, cabinets, and other surfaces	Radiators, cabinets, and other surfaces	Radiators, cabinets and other surfaces	Radiators, cabinets, and other surfaces
Walls and ceilings	Baseboards, moldings and trim	Baseboards, moldings and trim	Walls and ceilings and all other molding and trim

*** Wet-scraping and re-painting is not a form of abatement.**

**** Wet Scraping and Re-painting Window Friction Surfaces:** A window friction surface is any part of a window that touches or is in contact with another window part such that the two surfaces are capable of relative motion, and abrade, scrape or bind when in motion. If you choose to wet scrape and re-paint window parts that have friction surfaces such as sashes, stops, parting beads, jambs and wells, you must install replacement window channels or slides on the friction surfaces.

During all lead paint remediation work, you must use New York City Health Code Safety Standards described in Section 173.14. Safety standards include: preparing the work area, containing dust and debris, and daily and final cleanup. If you fail to follow these safety standards you are subject to fines.

Directions: Remediating Lead Paint Hazards

5PP

ENCLOSURE

Enclosure is the installation of a rigid barrier onto a lead painted surface.

Do not use enclosure where structures cannot hold the weight of the enclosure or are not sound.

Firm and workers must be EPA certified to use this method to repair violations.

To enclose a lead painted surface, follow these directions:

1. Dampen loose or defective paint with a water mister.
2. Use a scraper to remove it while it is damp.
3. Before covering walls, remove baseboards.
4. Cover walls entirely with wallboard, sheetrock, plasterboard, or paneling.
5. Tightly seal all seams after enclosure and replace baseboards with lead-free components.
6. Paint new component (where appropriate) with primer and two coats of non-lead based paint.
7. Clean up debris and dust as you work.

REPLACEMENT

This method is strongly recommended for windows and doors.

Firm and workers must be EPA certified to use this method to repair violations.

To remove and replace lead painted components, follow these directions:

1. Wet mist or HEPA-vacuum old component before removal.
2. Remove entire component, minimize dust dispersal, wrap in plastic and dispose of properly.
3. Install new part. Seal properly to avoid leaving spaces or holes around edges.
4. Paint new component as necessary with primer and two coats of non-lead based paint.
5. Clean up debris and dust as you work.

PAINT REMOVAL

This method preserves historic or decorative building parts, but is *not* recommended in most other cases.

Firm and workers must be EPA certified to use this method to repair violations.

To remove all lead paint on a surface, follow these directions:

1. Select a paint removal method: wet scraping and painting; chemical stripping; using a heat gun below 1100ºF; or power sanding with HEPA dust collector. Remove all paint from surface. These methods can be used on-site or off-site. If removing paint on-site, exercise extreme caution.
2. Clean up debris and dust as you work.
3. Seal surfaces with a primer and two coats of non-lead based paint or other coating material.

*WET SCRAPING AND PAINTING

This is not a permanent method and requires regular maintenance.

Firm must be EPA certified. Workers must have HUD Lead Safety for Remodeling, Repair, and Painting training or EPA lead abatement training to use this method to repair violations.

To remove only the damaged areas of lead paint on a surface, follow these directions:

1. Dampen loose or defective paint with a water mister.
2. Use a scraper to remove it while it is damp.
3. Clean up debris and dust as you work.
4. Seal surfaces with a primer and two coats of non-lead based paint or other coating material.

* If you choose to wet scrape and re-paint window parts such as sashes, stops, parting beads, jambs and wells, you must install replacement window channels or slides on the friction surfaces.

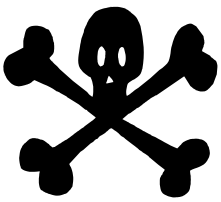

PROHIBITED METHODS OF PAINT REMOVAL

- Dry scraping and sanding
- Chemical strippers containing methylene chloride
- Grinding or sanding without HEPA exhaust
- Heat guns operating above 1100 degrees Fahrenheit
- Open flame gas fired torch

Identifying Violations Listed in the Commissioner's Order

6PP

Example of Violations on a Commissioner's Order

No.	Hazard Description			Cond.	Value	UOM
	Comment	Scope	Source			
Room #: 1	Loc:	Floor: 3rd Floor	Room: Kitchen From Public Hallway			
1	Door Opening on Wall #1 including casing, jambs, and stops.			Fair	1.0	(mg/cm²)
	Interior	Scope=	Source: N/A			
2	Door on Wall #1.			Fair	2.1	(mg/cm²)
	Interior	Scope=	Source: N/A			
3	Wall #1 including Baseboards, Chairrails, and Mouldings.			Fair	9.5	(mg/cm²)

Explanation of Wall Numbers: In the Commissioner's Order to Remediate Nuisance, walls and building parts are identified by numbers. Standing in the doorway or entrance facing into the room, walls are numbered as shown in the diagram below. If there is more than one doorway or entrance, one doorway will be designated as the reference point.

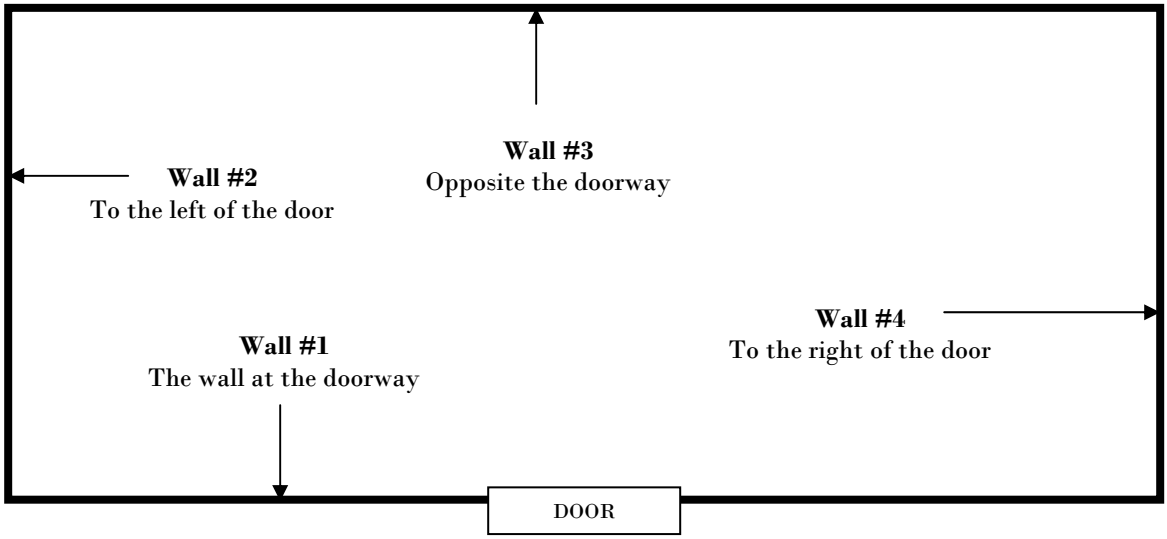

Explanation of Violations: A typical description of a wall violation (hazard) is listed in the Commissioner's Order as "Wall #2 including Baseboards, Chairrails and Mouldings." To correct this violation, all baseboards and mouldings along the entire length of the wall and the wall itself must be remediated.

Violations other than walls (doors, door openings, windows, radiators…) are listed in the Commissioner's Order associated with a wall number. The wall number describes the wall along which the violation is located. A typical description of a door opening violation is listed in the Commissioner's Order as "Door Opening on Wall # 1 including casing, jambs, and stops." This means that the location of this door casing is along Wall # 1. To correct the violation, all parts of the door opening listed in the description must be remediated. See Building Structure Diagrams (the following two pages) for additional information on descriptions of violations.

Call 212-676-6379 if you are unsure of a violation's location or have questions about its description.

Building Structure Diagrams

WALLS

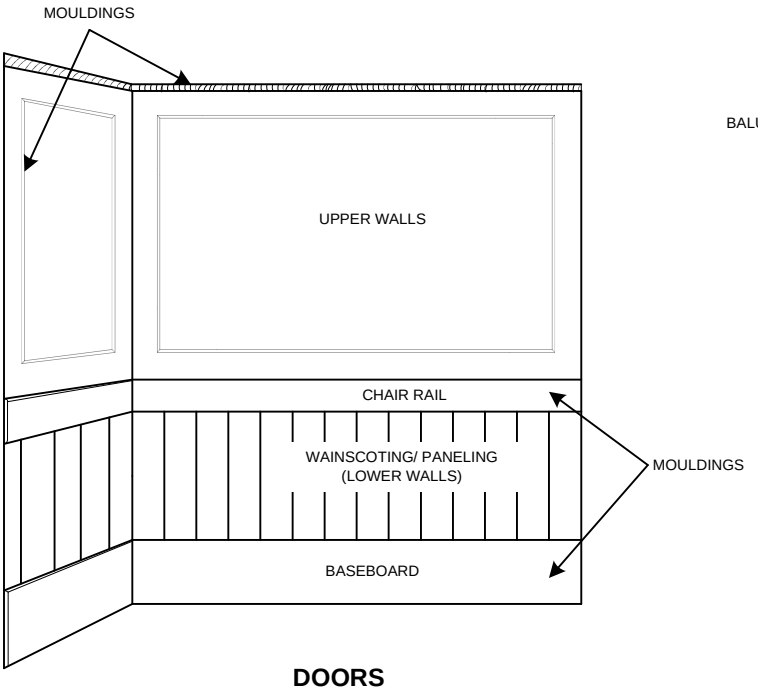

STAIRS

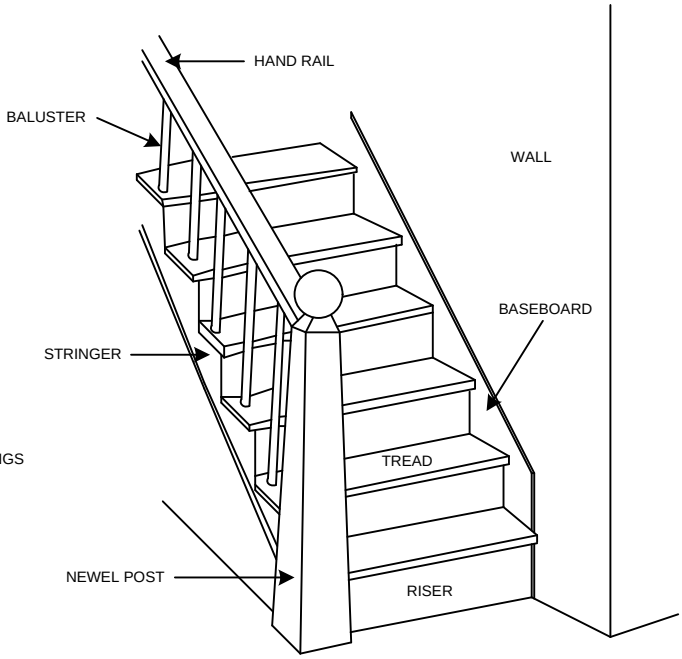

DOORS

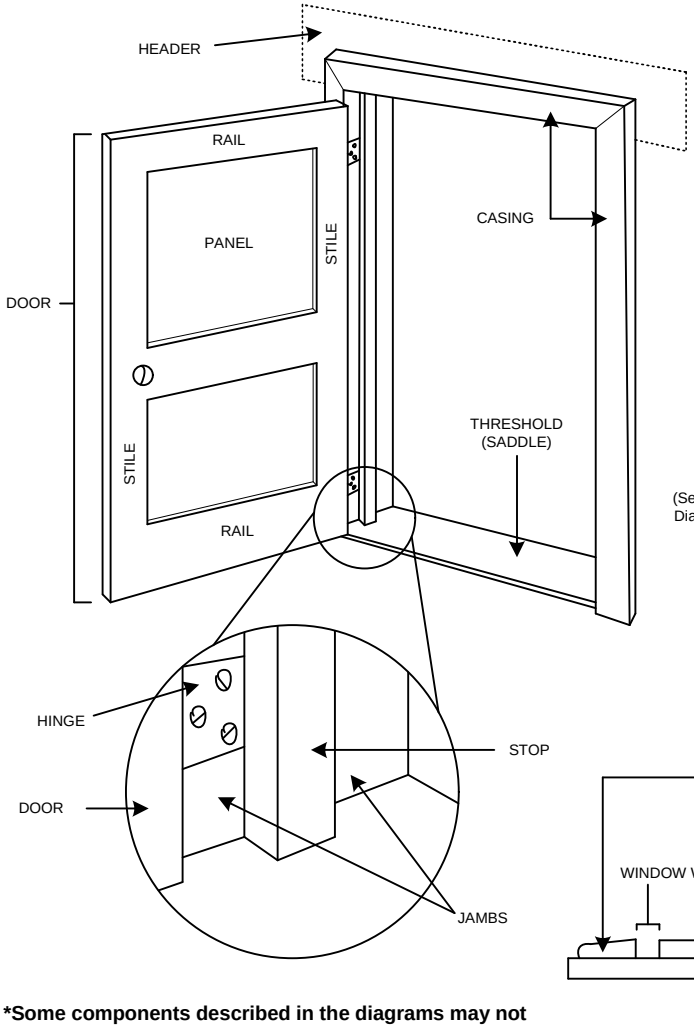

WINDOWS

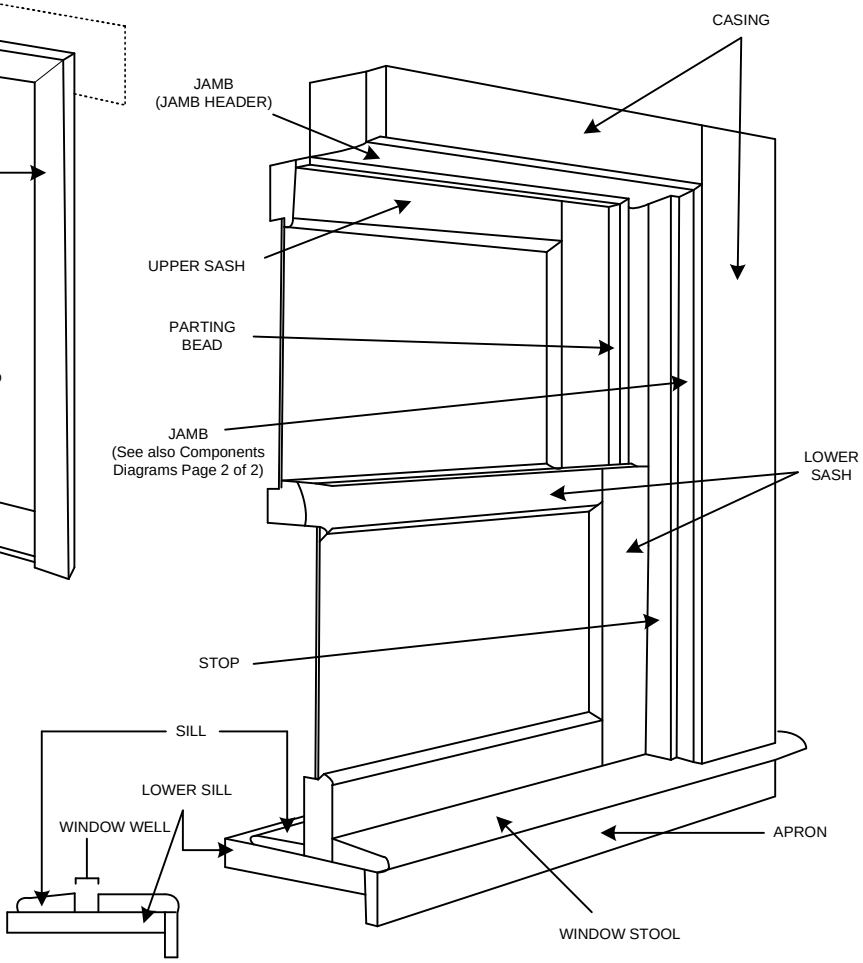

***Some components described in the diagrams may not be present in structures at the property.**

WINDOW JAMB VARIATIONS DIAGRAMS

Unless otherwise noted in the Commissioner's Order, a jamb violation includes:

- Side and header jambs (exposed jambs on both the interior and exterior parts of a window).
- Jamb tracks.
- Stops and window well.
- All decorative mouldings covering jambs.

EXPOSED JAMB

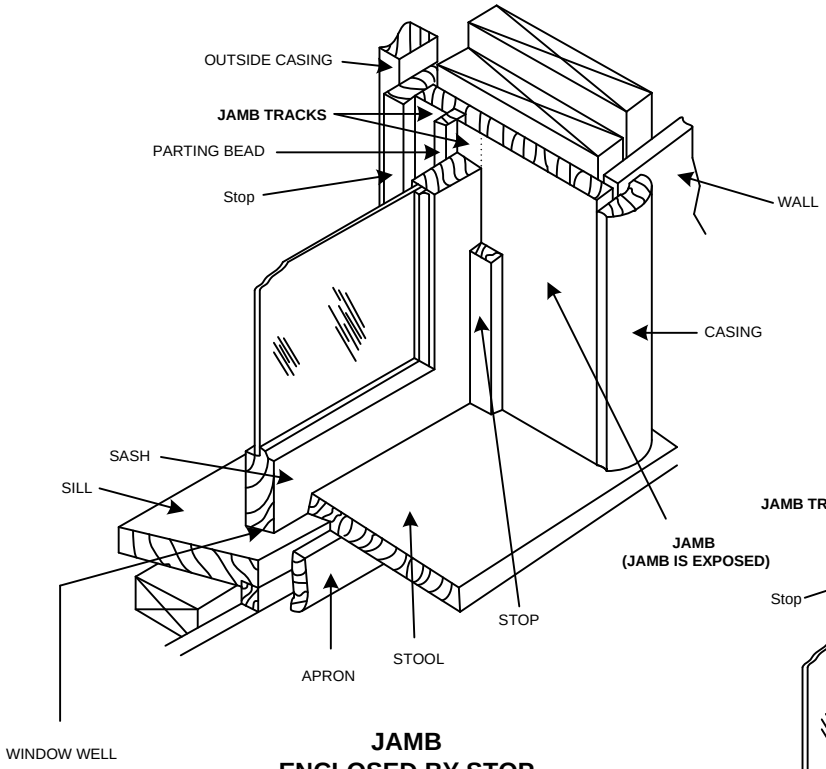

JAMB WITH DECORATIVE MOULDING

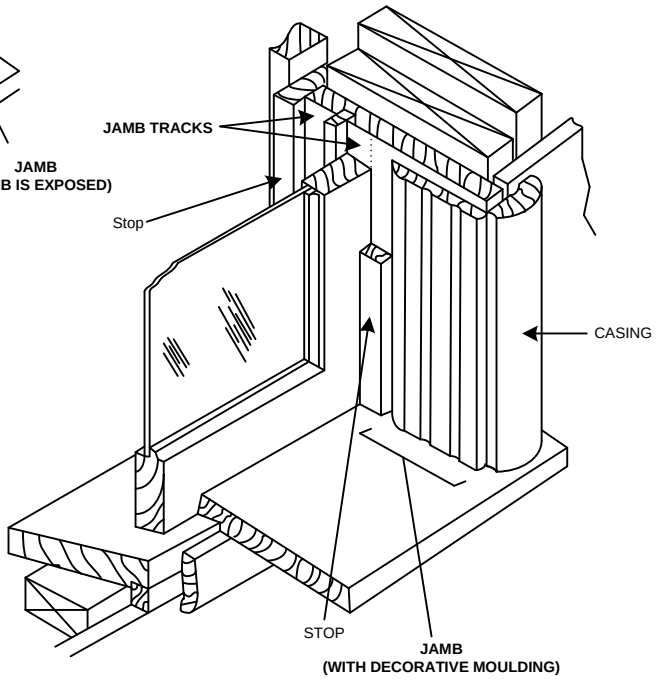

JAMB ENCLOSED BY STOP

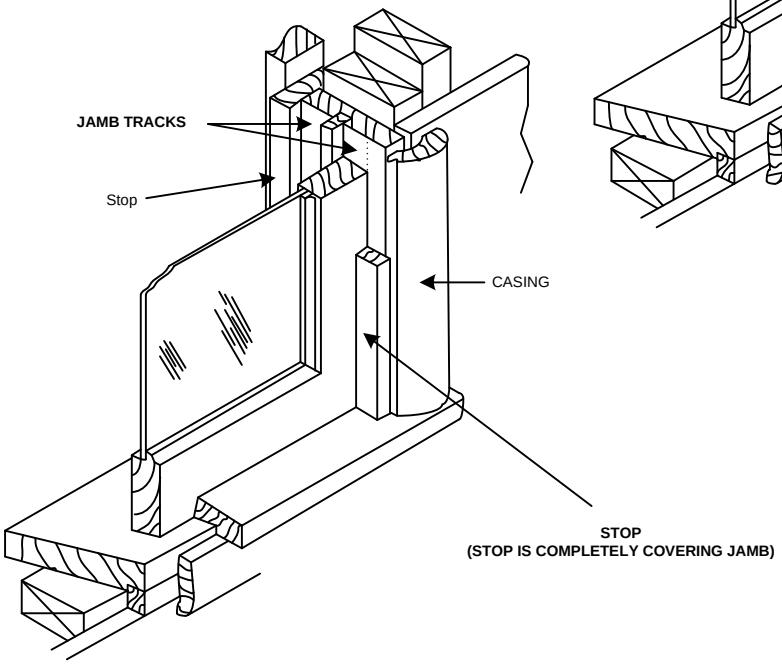

NOTIFICATION OF COMMENCEMENT OF LEAD ABATEMENT/REMEDIATION
NOTIFICACIÓN DE COMIENZO DE TRABAJO PARA EL CONTROL DE PLOMO

DATE: _____ (FECHA) DOHMH Order No.: _____ (NO. DE ORDEN DE DOHMH) CHILD ID: _____ (NO. DE IDENTIFICACION DEL NIÑO)

Post Copies of This Notice at least 24 Hours Before Starting Work
CALL (212) 676-6379 TO MAKE ANY COMPLAINTS CONCERNING THIS WORK

IF YOU HAVE RECEIVED A COMMISSIONER'S ORDER TO ABATE OR REMEDIATE YOU MUST COMPLETE AND FILE THIS NOTICE. THEN, HAND DELIVER OR FAX THIS NOTICE NO LESS THAN 24 HOURS AND NO MORE THAN 96 HOURS BEFORE BEGINNING THE REPAIR WORK ORDERED BY THE DEPARTMENT OF HEALTH AND MENTAL HYGIENE (DOHMH). FILE A COMPLETED COPY OF THIS FORM WITH:

THE NEW YORK CITY DEPARTMENT OF HEALTH AND MENTAL HYGIENE
FIELD SUPPORT UNIT
253 BROADWAY, 11TH FLOOR, CN 58 NEW YORK, NEW YORK 10007
Telephone Number: (212) 676-6379 Fax Number: (212) 676-6188 or 6144

NOTE: File any changes in the information provided in this notice with the Department of Health and Mental Hygiene before beginning work, or if work has begun, within 24 hours of any change.

Copias de Esta Notificación Deben Ser Colocadas en un lugar visible, por lo menos 24 horas antes de empezar el trabajo.
ALGUNA QUEJA SOBRE ESTE ASUNTO PUEDE SER DIRIGIDA LAS 24 HORAS AL DIA, AL SIGUIENTE TELÉFONO: (212) 676-6379

EL DUEÑO DE LA PROPIEDAD DEBE LLENAR ESTE FORMULARIO Y NOTIFICARNOS EN NO MENOS DE 24 HORAS Y NO MAS DE 96 HORAS EN PERSONA O VIA FAX ANTES DE COMENZAR EL TRABAJO ORDENADO POR EL DEPARTAMENTO DE SALUD Y SALUD MENTAL (DOHMH). DIRIJA DICHA NOTIFICACIÓN A LA SIGUENTE DIRECCIÓN:

THE NEW YORK CITY DEPARTMENT OF HEALTH AND MENTAL HYGIENE
FIELD SUPPORT UNIT
253 BROADWAY, 11TH FLOOR, CN 58 NEW YORK, NEW YORK 10007
Número de teléfono: (212) 676-6379 Número de fax: (212) 676-6188 o 6144

NOTA: Si tiene algún cambio que hacerle a la información proporcionada en este formulario, debe informar al Departamento de Salud y Salud Mental antes de comenzar el trabajo, o si el trabajo ya comenzó, tiene 24 horas para informar al Departamento después que el cambio haya ocurrido.

PLEASE PRINT OR TYPE CLEARLY (POR FAVOR ESCRIBA EN IMPRENTA O ESCRÍBALO A MÁQUINA)

LOCATION OF LEAD BASED PAINT VIOLATION(S) (INFORMACIÓN SOBRE LA UBICACIÓN DE LAS VIOLACIONES)

ADDRESS: DIRECCIÓN:	APT: APTO:	BOROUGH: CONDADO:	ZIP CODE: ZONAL POSTAL:

OWNER INFORMATION (INFORMACIÓN SOBRE EL DUEÑO)

NAME (NOMBRE): PHONE (TEL): ( ) FAX: ( )
ADDRESS (DIRECCIÓN): CITY (CIUDAD): STATE (ESTADO):
ZIP (ZONAL POSTAL): SIGNATURE (FIRMA): (MUST BE SIGNED)(DEBE DE SER FIRMADO)

EPA CONTRACTOR (FIRM) INFORMATION (INFORMACIÓN SOBRE EL CONTRATISTA)

CO. NAME (NOMBRE DE LA COMPAÑIA): CONTACT PERSON (PERSONA A CONTACTAR):
ADDRESS (DIRECCIÓN): CITY (CIUDAD): STATE (ESTADO):
ZIP (ZONA POSTAL): PHONE (TEL): ( ) FAX: ( )
SIGNATURE (FIRMA): EPA CERTIFICATE NO.:

DUST TESTING COMPANY / LABORATORY INFORMATION (INFORMACIÓN SOBRE LA COMPAÑIA DE PRUEBAS DE POLVO Y EL LABORATORIO)

CO. NAME (NOMBRE DE LA COMPAÑIA): CONTACT PERSON (PERSONA A CONTACTAR):
ADDRESS (DIRECCIÓN): CITY (CIUDAD): STATE (ESTADO): ZIP (ZONA POSTAL):
PHONE (TEL): ( ) FAX: ( )
SIGNATURE (FIRMA): EPA CERTIFICATE NO. (FOR DUST WIPE SAMPLING): (EPA NO. DE CERTIFICADO PARA LAS PRUEBAS DE POLVO)

LABORATORY NAME FOR SAMPLE ANALYSIS: (NOMBRE DEL LABORATORIO PARA EL ANÁLISIS DE MUESTRAS) NYS DOH ELAP NO.:
ADDRESS (DIRECCIÓN): CITY (CIUDAD): STATE (ESTADO): ZIP (ZONA POSTAL):
PHONE (TEL): ( ) FAX: ( ) SIGNATURE (FIRMA):

(For internal use only.) (Para uso interno sólamente) **LASU No.:**

SEE THE REVERSE SIDE FOR ADDITIONAL REQUIREMENTS.
MIRE EL REVERSO DE ESTA PÁGINA PARA MÁS INFORMACIÓN SOBRE LOS REQUISITOS ADICIONALES.

CHILD ID:_____ **DOHMH ORDER NO.:**_____
(NO. DE IDENTIFICACION DEL NIÑO) (NO. DE ORDEN DE DOHMH)

ABATEMENT/REMEDIATION PROJECT (INFORMACIÓN SOBRE EL PROYECTO):
Include the hours that work takes place for each day of the week. (Incluya el horario de trabajo para cada día de la semana)

START DATE (FECHA DE COMIENZO): **EXPECTED DATE OF COMPLETION** (FECHA EN QUE SE ESPERA COMPLETAR EL TRABAJO):

Day	Sunday	Monday	Tuesday	Wednesday	Thursday	Friday	Saturday
Work Hours	-	-	-	-	-	-	-

Describe and identify all surfaces and structures to be repaired as indicated on the Commissioner's Order to Abate or Remediate nuisance and check the method of abatement or repair for each as indicated in the enclosed directions in the table below:

Describa e identifique todas las superficies y estructuras que serán reparadas como se indicó en la Orden del Comisionado Para el Control de Plomo y marque los métodos de reparación para cada una (Como se indica en las instrucciones de la tabla abajo).

ROOM, LOCATION, SURFACES & STRUCTURES TO BE ABATED OR REPAIRED (HABITACIONES, UBICACIÓN, SUPERFICIES Y ESTRUCTURAS QUE SERÁN REPARADAS) **EXAMPLE:** KITCHEN: DOOR OPENING ON WALL #1	METHOD OF REMEDIATION CHECK ALL BOXES THAT APPLY (MÉTODO USADO)			
	ENCLOSURE (CUBRIR)	**REPLACEMENT** (REEMPLAZAMIENTO)	**REMOVAL** (REMOVER)	***WET SCRAPE AND PAINT** (RASPAR LA PINTURA HUMEDECIÉNDOLA Y PINTAR)

***Wet scrape and paint is not a permissible method of <u>abatement</u> and is not to be used as a method to correct violations listed on a Commissioner's Order to Abate.**

(*Raspar la pintura descascarada humedeciéndola y volver a pintar no es un método de <u>eliminación de plomo</u> permitido y no debe ser usado como un método para corregir violaciones indicadas en la Orden del Comisionado para el Control de Plomo).

COPY AND ATTACH ADDITIONAL SHEETS AS NEEDED
(COPIE Y AÑADA LAS HOJAS NECESARIAS)