STANDARD DETAILS of CONSTRUCTION

July 1, 2010

THE CITY OF NEW YORK
DEPARTMENT OF TRANSPORTATION

STANDARD DETAILS of CONSTRUCTION

TABLE of CONTENTS

1. H-1003A PEDESTRIAN CROSSWALKS - MALL TYPE A
2. H-1003B PEDESTRIAN CROSSWALKS - MALL TYPE B
3. H-1004 TYPICAL TEMPORARY PEDESTRIAN PASSAGEWAY IN ROADWAY AREA DURING CONSTRUCTION
4. H-1005 BUS STOP IN NEW ROADWAY
5. H-100SA BUS STOP IN EXISTING ROADWAY
6. H.1009 CHAIN LINK FENCE DETAILS TENSION WIRES TOP AND/OR BOTTOM
7. H-1010 STEEL FACED CONCRETE CURB STEEL FACING TYPE D
8. H-1011 SIDEWALK PEDESTRIAN RAMPS
9. H-1012 TIMBER CURB
10. H-1013 ILLUMINATED TIMBER BARRICADE
11. H-1014 TEMPORARY PEDESTRIAN STEEL BARRICADE
12. H-1015 STEEL FACED DROP CURB DRIVEWAYS
13. H-1017 BAR PICKET FENCE (4′-0″ HIGH)
14. H-1021 CHAIN LINK FENCE. DETAILS (SH. 1 TO 4)
15. H-1022 BEAM BARRIER FOR DEAD END STREETS
16. H-1029 CRITERIA FOR DESIGN & CONSTRUCTION OF CANOPIES
17. H-1030 STANDARD RECESS IN VAULT CONSTRUCTION TO PROVIDE FOR STREET WIDENING. RECEIVING BASINS. INLETS. AND 12′-0″ CORNER RADIUS
18. H-1031 TYPICAL PAVEMENT KEY
19. H·1032 TYPICAL NEW PAYMENT IN UNPAVED WING AREA
20. H·1033 TYPICAL RESURFACING ON ASPHALT PAVEMENT AND/OR WEARING COURSE (LESS THAN FULL WIDTH)
21. H·1034 TYPICAL CONSTRUCTION JOINTS FOR CONCRETE BASE FOR PAVEMENT
22. H·1035 REINFORCED CONCRETE CURB & DROP CURB
25. H·1038 TYPE III BREAKAWAY BARRICADE
26. H·1040 TRANSVERSE CONSTRUCTION JOINTS FOR CONCRETE BASE
27. H-1041 CONCRETE COLLAR AROUND STEAM MANHOLE AND STEAM VALVE
28. H-1042A STANDARD TRENCH OR HOLE RESTORATION IN ACCORDANCE WITH LOCAL LAW NO. 14
29. H-1042B CONCRETE PAVEMENT RESTORATION
30. H-1042C ROADWAY RESTORATION FOR NEWLY CONSTRUCTED ROADWAYS
31. H-1043 STEEL FACED CURB STEEL FACING TYPE D FOR STRUCTURES
32. H·1044 CONCRETE CURB
33. H-1045 CONCRETE SIDEWALK
34. H-1046 STREET TREE PLANTING DETAIL TYPE I
35. H-1046A PROTECTIVE TREE BARRIER
36. H·1047 TYPICAL CURB DETAIL AT EXISTING TREES
37. H·1049 PLASTIC BARREL
38. H·1050 REINFORCED CONCRETE PAVEMENT CONSTRUCTION DETAILS (SH. 1 TO 4)
39. H·1051 TEMPORARY WOODEN STEPS
40. H-1053 DETAILS FOR CONSTRUCTING AREAS OF ADJUSTMENT AND TRANSITION SECTIONS
41. H-1054 LIMITS OF MEASUREMENT FOR PAYMENT OF TEMPORARY ASPHALT PAVEMENT
42. H·1055 PAVEMENT KEY TYPE A, B-1, B-2, C
43. H-1056 TYPICAL GRANITE CURB
44. H·1056A NY HISTORICAL GRANITE CURB
45. H·1057 TEMPORARY STORAGE AREA
46. MS-1000 NEW YORK CITY COMPARISON OF DATUM PLANES
47. MS-1001 SIDEWALK PAYMENT LIMITS
48. MS-1003 TYPICAL ROADWAY CROS5 - SECTION RESURFACING
49. MS-1004 CATCH BASIN ADJUSTMENT - TYPE 2

THE CITY OF NEW YORK
DEPARTMENT OF TRANSPORTATION

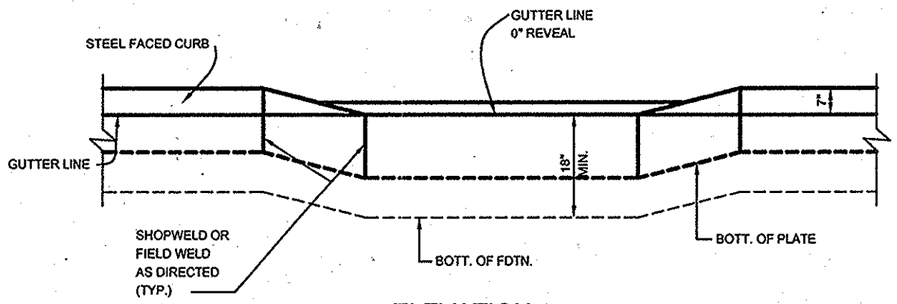

ELEVATION
NOT TO SCALE

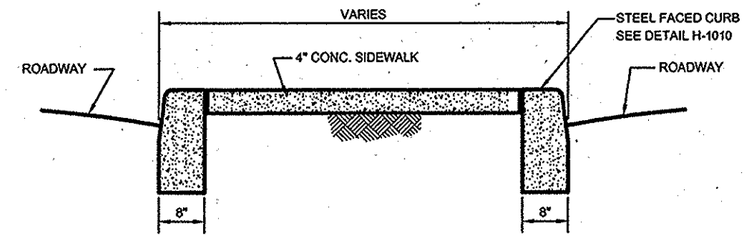

SECTION THRU MALL A-A
NOT TO SCALE

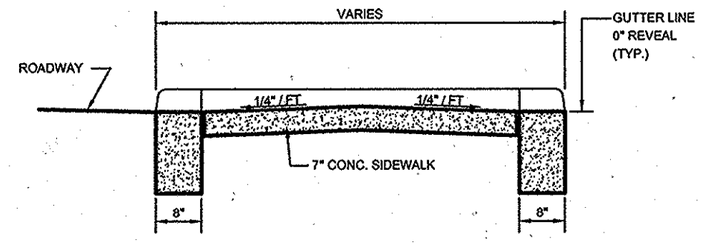

SECTION THRU CROSS WALK B-B
NOT TO SCALE

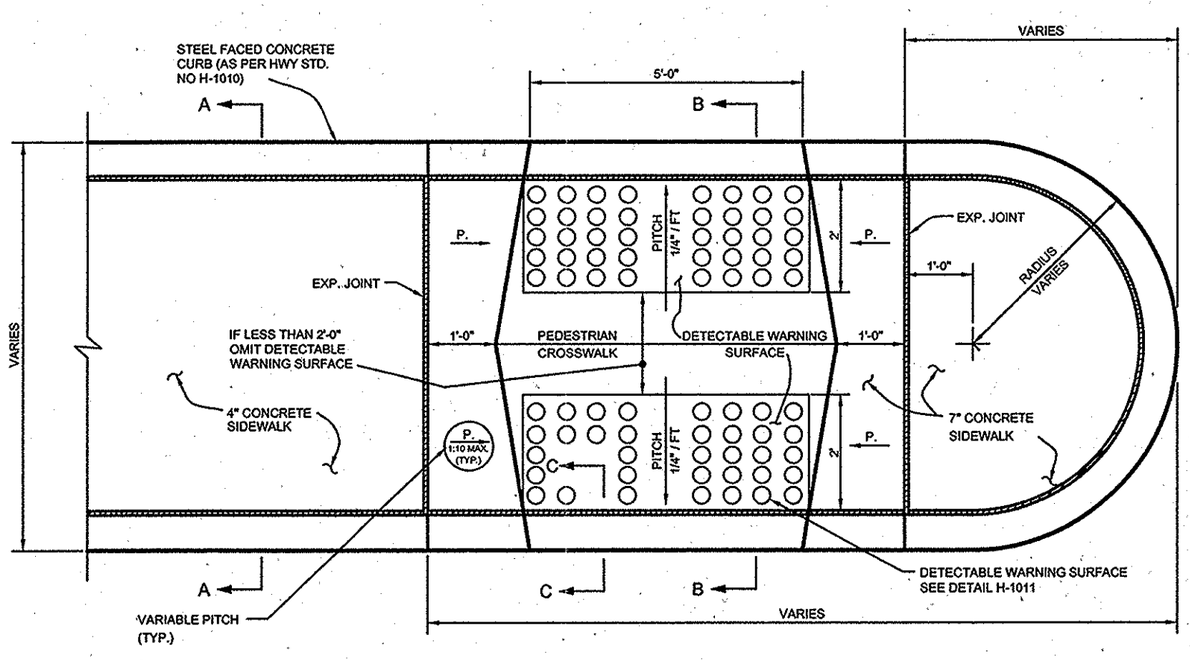

PLAN
NOT TO SCALE

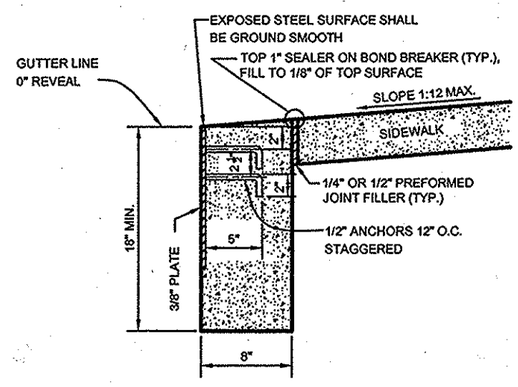

SECTION C-C
NOT TO SCALE

REVISION NO.	DESCRIPTION	DATE	APPROVED

NEW YORK CITY DOT

New York City
Department of Transportation

PEDESTRIAN CROSSWALKS-MALL
TYPE-A

Approved:
Chief Engineer
Department of Transportation

Approved:
Associate Commissioner
Infrastructure/Design
Department of Design + Construction

Date Issued: 7/1/10

Scale: None

Drawing # H-1003A

CHECKED BY: MZ

HWS-H1003A

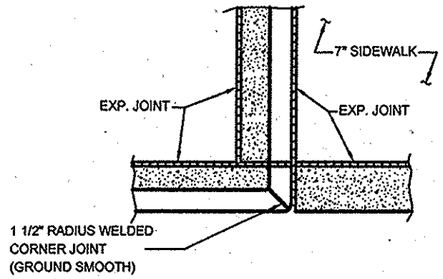

TOP VIEW - STEEL FACED CONC. CURB

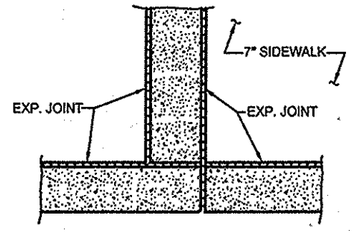

TOP VIEW - CONCRETE CURB

DETAIL -A

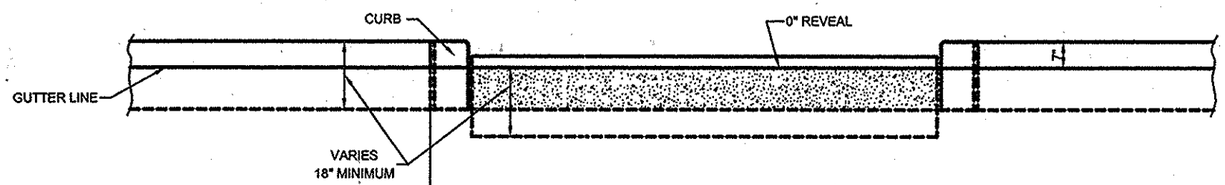

ELEVATION
NOT TO SCALE

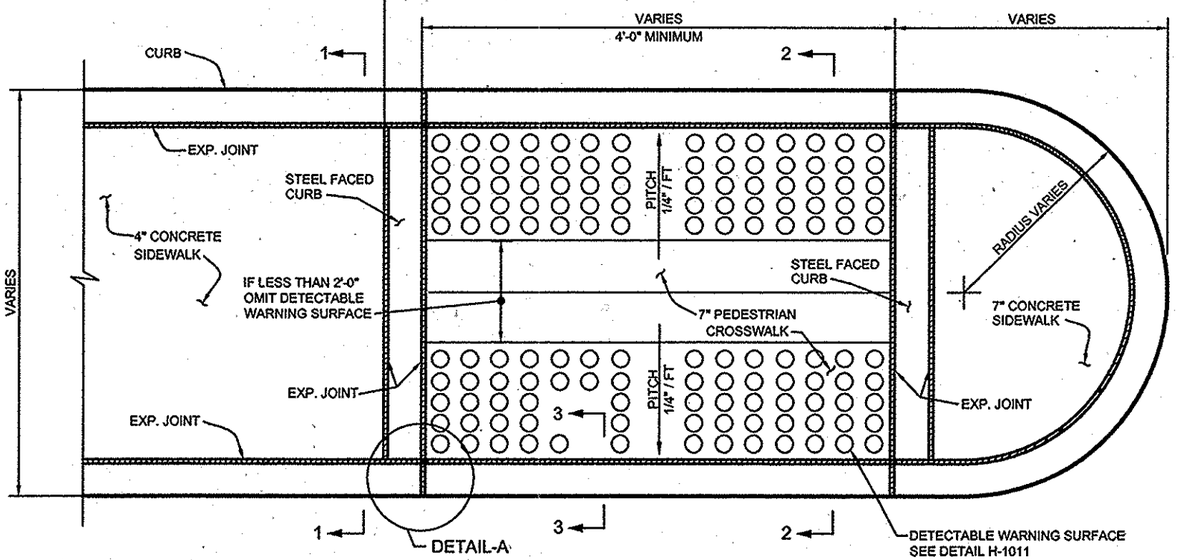

PLAN
NOT TO SCALE

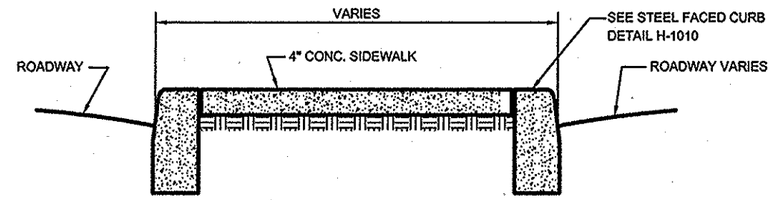

SECTION 1-1
NOT TO SCALE

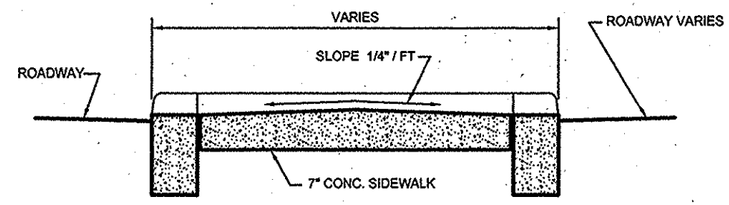

SECTION 2-2
NOT TO SCALE

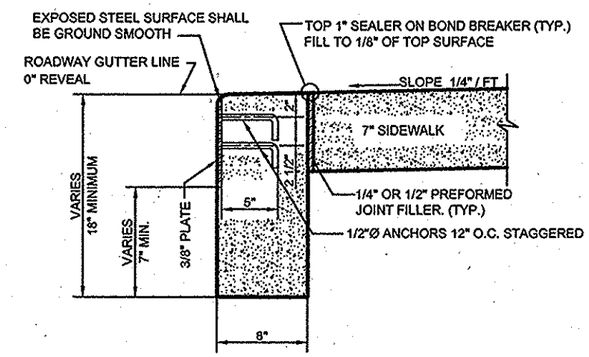

SECTION 3-3
STEEL FACED CONCRETE HEADER
N.T.S.

REVISION NO.	DESCRIPTION	DATE	APPROVED

NEW YORK CITY DOT

New York City
Department of Transportation

PEDESTRIAN CROSSWALKS-MALL
TYPE-B

Approved:
Chief Engineer
Department of Transportation

Approved:
Associate Commissioner
Infrastructure/Design
Department of Design + Construction

Date Issued: 7/1/10

Scale: None

Drawing # H-1003B

CHECKED BY: MZ

DDVS-H1003B

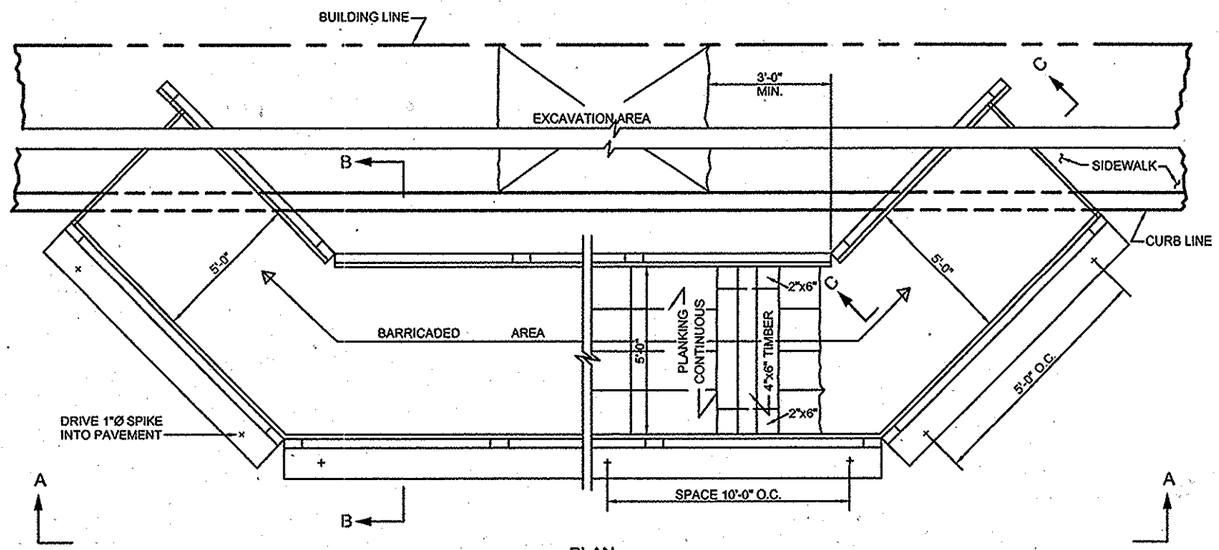

PLAN

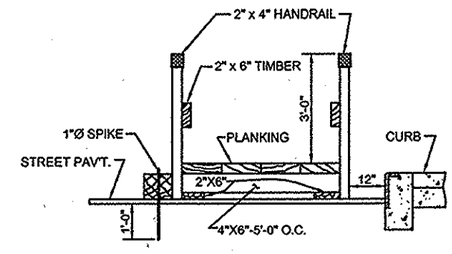

SECTION B-B

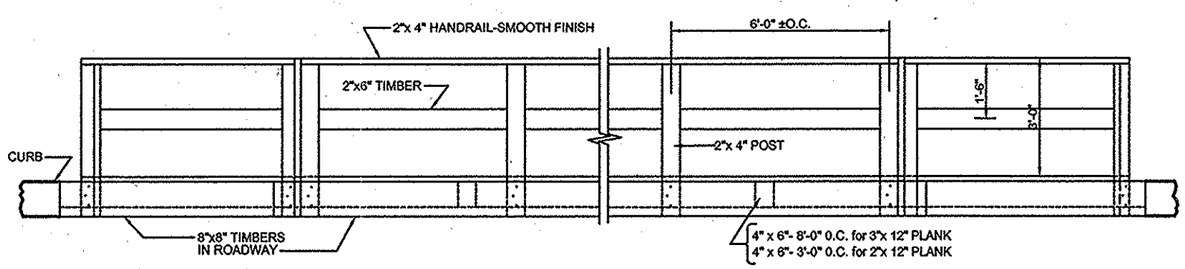

ELEVATION A-A

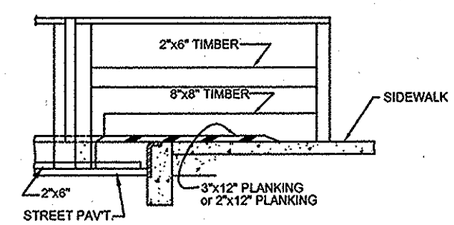

SECTION C-C

NOTES

1. ALL TIMBER SHALL BE DOUGLAS FIR GRADE NO 1.
2. ALL WORK SHALL CONFORM WITH NATIONAL DESIGN SPECIFICATIONS FOR STRESS GRADE LUMBER AND ITS FASTENINGS.
3. LIGHTING FIXTURES CAN BE BATTERY TYPE FLASHER WARNING LIGHT OR AS DIRECTED BY THE ENGINEER.
4. RAILS & POSTS ARE TO RECEIVE TWO (2) COATS OIL PAINT, ORANGE & WHITE COLORS, IN ACCORDANCE WITH THE MANUAL ON UNIFORM TRAFFIC CONTROL DEVICES.
5. CONTRACTOR TO PROVIDE SHOP DRAWING CERTIFIED BY LICENSED PROFESSIONAL ENGINEER, CURRENTLY REGISTERED IN THE STATE OF NEW YORK, FOR APPROVAL.

CHECKED BY: MZ

HWS-H1004

REVISION NO.	DESCRIPTION	DATE	APPROVED

NEW YORK CITY DOT

New York City
Department of Transportation

TYPICAL TEMPORARY PEDESTRIAN PASSAGEWAY IN ROADWAY AREA DURING CONSTRUCTION

Approved:
Chief Engineer
Department of Transportation

Approved:
Associate Commissioner
Infrastructure/Design
Department of Design + Construction

Date Issued: 7/1/10

Scale: None

Drawing # H-1004

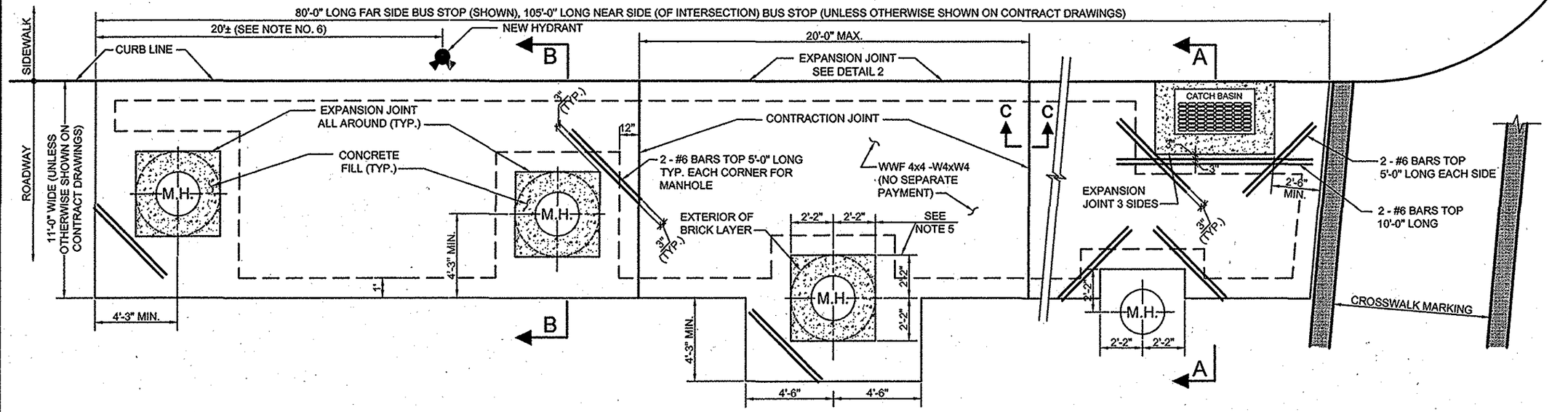

PLAN OF BUS STOP

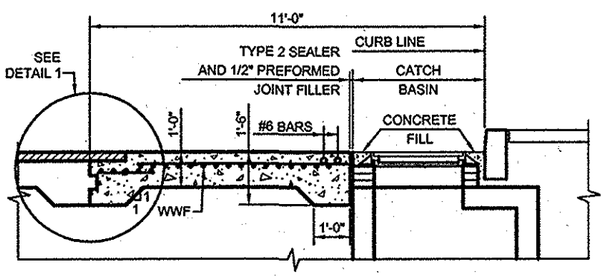

SECTION A-A

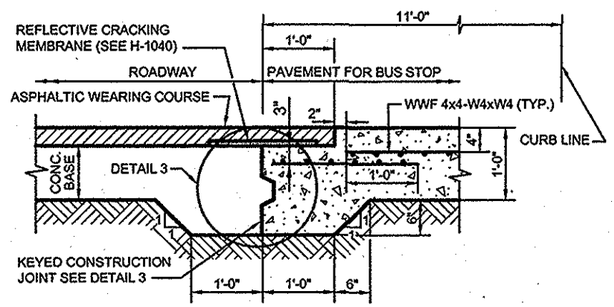

DETAIL 1
KEYED CONSTRUCTION JOINT
(EXCEPT CURB LINE)

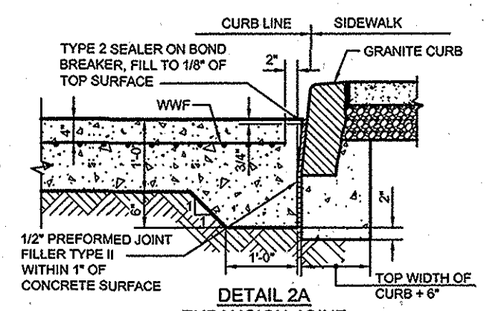

DETAIL 2A
EXPANSION JOINT
AT GRANITE CURB

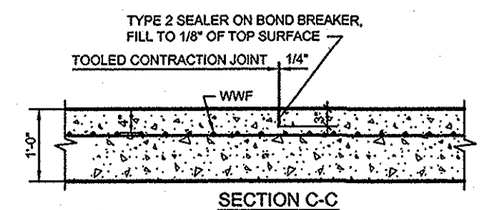

SECTION C-C
CONTRACTION JOINT

NOTES:

1. BUS PADS ARE NOT REQUIRED, WHEN REINFORCED CONCRETE PAVEMENT IS PLACED IN THE ROADWAY.
2. EDGE OF THE BUS PAD AT INTERSECTIONS SHALL BE PARALLEL TO CROSSWALK MARKING LINES OR INTERSECTING BUILDING LINE OR AS DETERMINED BY ENGINEER.
3. DRAINAGE STRUCTURES AND MANHOLES SHALL BE TOTALLY WITHIN OR TOTALLY OUTSIDE THE BUS PAD.
4. LAPS IN WELDED WIRE FABRIC SHALL BE A MINIMUM OF 12 INCHES.
5. DIMENSIONS SHOWN ARE FOR DEPARTMENT OF ENVIRONMENTAL PROTECTION 27"Ø STANDARD SEWER MANHOLE. ADJUST TO ACCOMMODATE OTHER SIZE HARDWARE, AS APPROVED BY THE ENGINEER.
6. THE EXACT LOCATION OF THE HYDRANT SHALL BE DETERMINED IN THE FIELD BY THE ENGINEER.

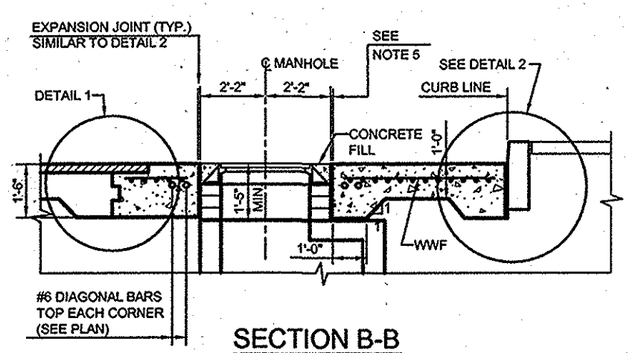

SECTION B-B

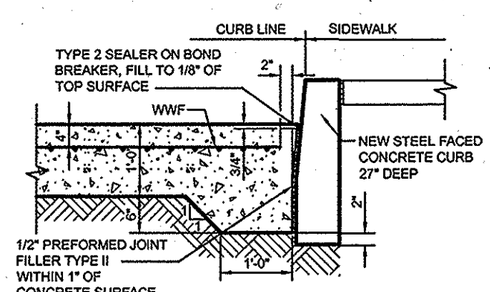

DETAIL 2
EXPANSION JOINT
AT STEEL FACED CONCRETE CURB
(FOR GRANITE CURB SEE DETAIL 2A)

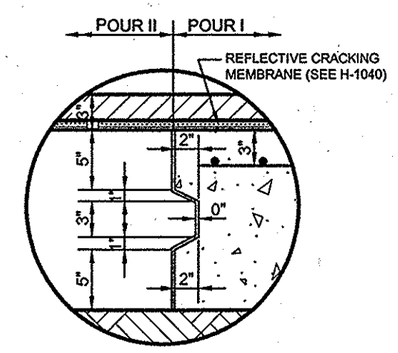

DETAIL 3
KEYED CONSTRUCTION JOINT

REVISION NO.	DESCRIPTION	DATE	APPROVED

NEW YORK CITY DOT

New York City
Department of Transportation

BUS STOP IN
NEW ROADWAY

Approved:
Chief Engineer
Department of Transportation

Approved:
Associate Commissioner
Infrastructure/Design
Department of Design + Construction

Date Issued: 7/1/10

Scale: None

Drawing # H-1005

CHECKED BY: MZ

HWS-H1005

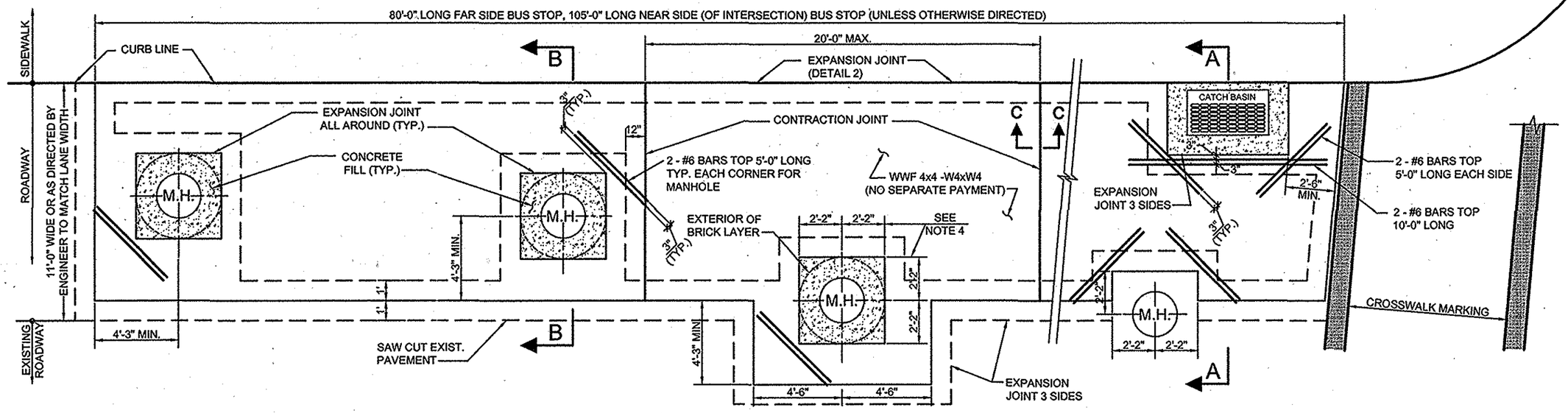

PLAN OF BUS STOP

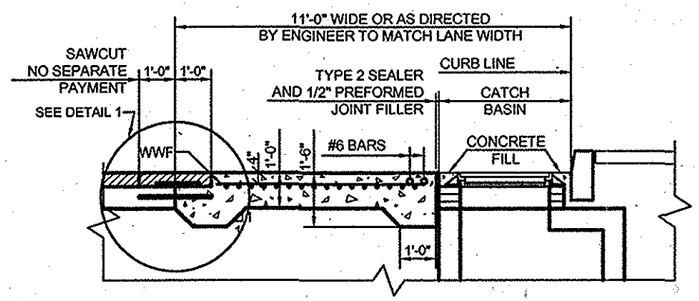

SECTION A-A

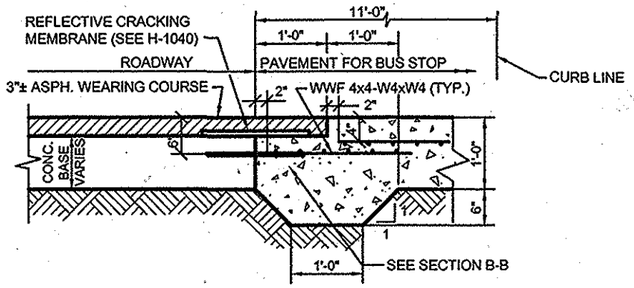

DETAIL 1

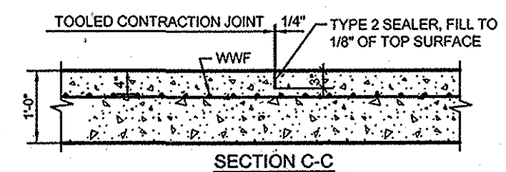

SECTION C-C
CONTRACTION JOINT

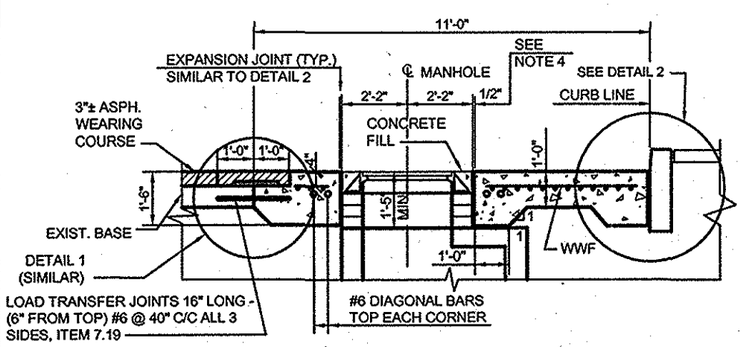

SECTION B-B

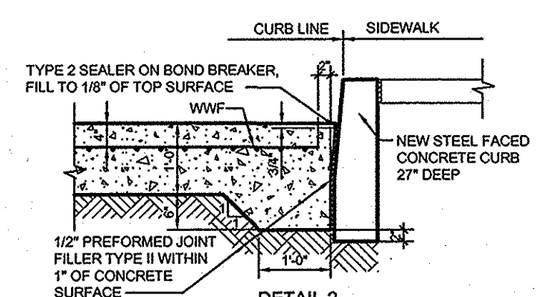

DETAIL 2
EXPANSION JOINT

NOTES:

1. EDGE OF THE BUS PAD AT INTERSECTIONS SHALL BE PARALLEL TO CROSSWALK MARKING LINES OR INTERSECTING BUILDING LINE OR AS DETERMINED BY ENGINEER.
2. DRAINAGE STRUCTURES AND MANHOLES SHALL BE TOTALLY WITHIN OR TOTALLY OUTSIDE THE BUS PAD.
3. LAPS IN WELDED WIRE FABRIC SHALL BE A MINIMUM OF 12 INCHES.
4. DIMENSIONS SHOWN ARE FOR DEPARTMENT OF ENVIRONMENTAL PROTECTION 27"Ø STANDARD SEWER MANHOLE. ADJUST TO ACCOMMODATE OTHER SIZE HARDWARE, AS APPROVED BY THE ENGINEER.

REVISION NO.	DESCRIPTION	DATE	APPROVED

NEW YORK CITY DOT

New York City Department of Transportation

BUS STOP IN EXISTING ROADWAY

Approved: Chief Engineer, Department of Transportation

Approved: Associate Commissioner, Infrastructure/Design, Department of Design + Construction

Date Issued: 7/1/10

Scale: None

Drawing # H-1005A

CHECKED BY: MA

HWS-H1005A

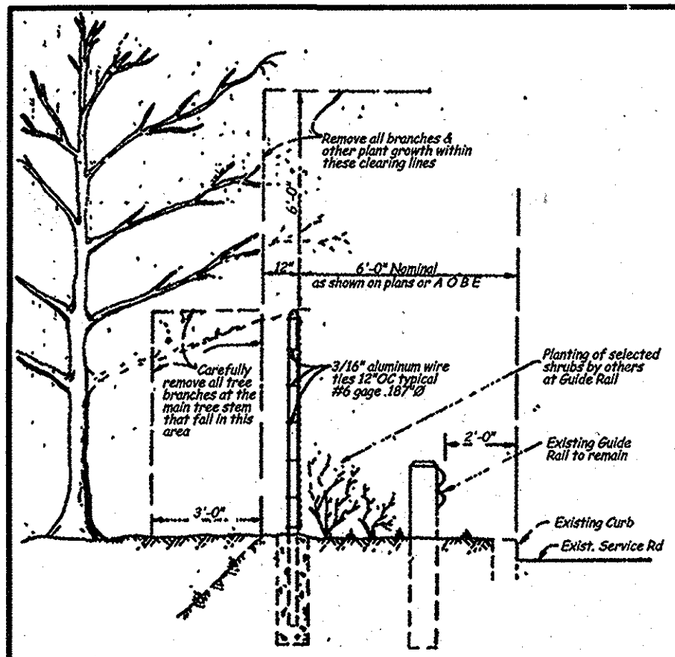

TYPICAL FENCE LOCATION

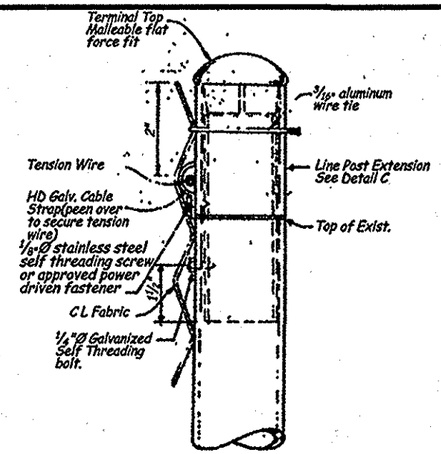

SECTION A-A
DETAIL OF POST EXTENSION AND TENSION WIERE ATTACHMENT TO POST

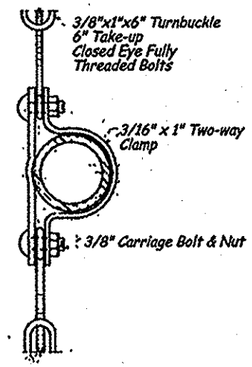

SECTION B-B
DETAIL OF TOP TWO WAY CLAMP OF TENSION WIRE TO POST AND TURNBUCKLES

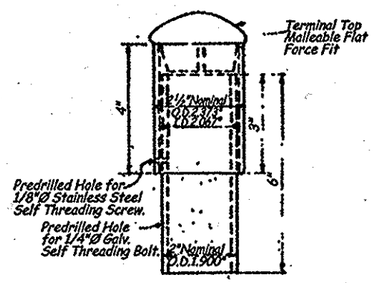

DETAIL C
LINE POST EXTENSION

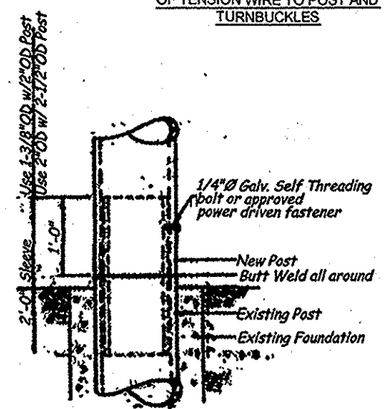

SECTION C-C
DETAIL OF RIGID SPLICE INSTALLATION OF NEW POST TO EXISTING POST BASE

NOTES

1. The tension wire shall be secured at the top with a two-way clamp at each seventh post for 6'-0" high or at each fifth post for 8'-0" high fencing so that the max. untied span of tension wire does not exceed 36'-0" for 6'-0" high or 32'-0" for 8'-0" high fence. Whereas, if the total length of damaged fabric to be replaced is less than 16'-0", no tension wire shall be installed, but the damaged top rail shall be replaced with new top rail. New tension wires shall be installed only when damages to top or bottom rails have been incurred and replacement is necessary.

2. Corner posts shall be used at sharp breaks in vertical grade and changes in horizontal alignment of 15° and over. Intermediate Pull Posts shall be installed along tangent fence runs and shall be spaced at intervals not exceeding 180'.

3. All fabrication and installation details of this fencing are shown on the contract plans. Any proposed changes by the Contractor shall be submitted in writing, explaining the reason for such requested change and supplemented by clear shop drawings defining the Contractors proposal.

4. Layout of chain link fence post locations shall be performed by the Contractor in accordance with the intent of the Contract Plans. All such layout shall be checked and approved by the Engineer prior to erection of fence.

5. The fence shall be carefully aligned to a uniform grade by the Contractor. Before the posts are permanently affixed, the Engineer shall inspect the line and grade, order any necessary adjustments and approve the final alignment in that section of fencing.

6. Materials: All new "Right-of-Way" fence to be no higher than six (6'-0") feet. All posts shall be standard weight galvanized steel pipe conforming to the requirements of A.S.T.M. designation A 120-6ST, except that the pipe shall be unthreaded and untested for water pressure. All new posts to be set-in-place with a concrete footing.

Line Post Top: Industrial grade galvanized malleable flat casting for 2" Nominal Dia. Line Post.

Gate, End, Corner & Pull Post Tops: Malleable flat arc terminal top galvanized casting inside fit for standard 2-1/2" Nominal Dia. Post.

Tension Bars: 72" long 1/4" x 1/2" flat galvanized steel tension bars.
Tension Bands: Heavy weight 1/8" x 1" galvanized steel tension bands for a 2-1/2" Nom. Dia., minimum wt. 42lbs. The carriage bolt to be supplied for each of those bands shall be gal. Steel 3/16" x 1-1/2" carriage bolt and nut.
The Contractor shall supply to the Engineer, catalog cuts of all fittings and connections to be used in the contract for the Engineers approval. The above list of fittings and connections shall be deemed only a listing of typical parts to be used in construction of fence, all other fittings and connections required for a proper fence installation shall be used by the Contractor. These undesignated fittings and connections shall be good grade galvanized steel of a quality comparable or superior to these fittings and connections designated.

Fence Fabric: shall be hot-dipped galvanized steel fabric with the zinc coating not less the 2g per sq. ft. or aluminum-coated steel fabric meeting the requirements of A.A.S.H.O. Specification W181 except that base metal shall have a nominal strength of 80,000 p.s.i. after weaving.
The size of the mesh opening and nominal Dia. Of fabric wire shall be 2 inches and 0.148 inches respectively and shall be knuckled top and bottom.

7. When fences terminate at structures, the clear spaces between the fences and structure shall not exceed 4".

8. Gore Treatment: 150'-0" of clear area from the point of gore will hereafter be maintained.

9. For fence heights other than those shown refer to H-1021 for size of fence posts and size of members and fabrics. Omit top and bottom rails.

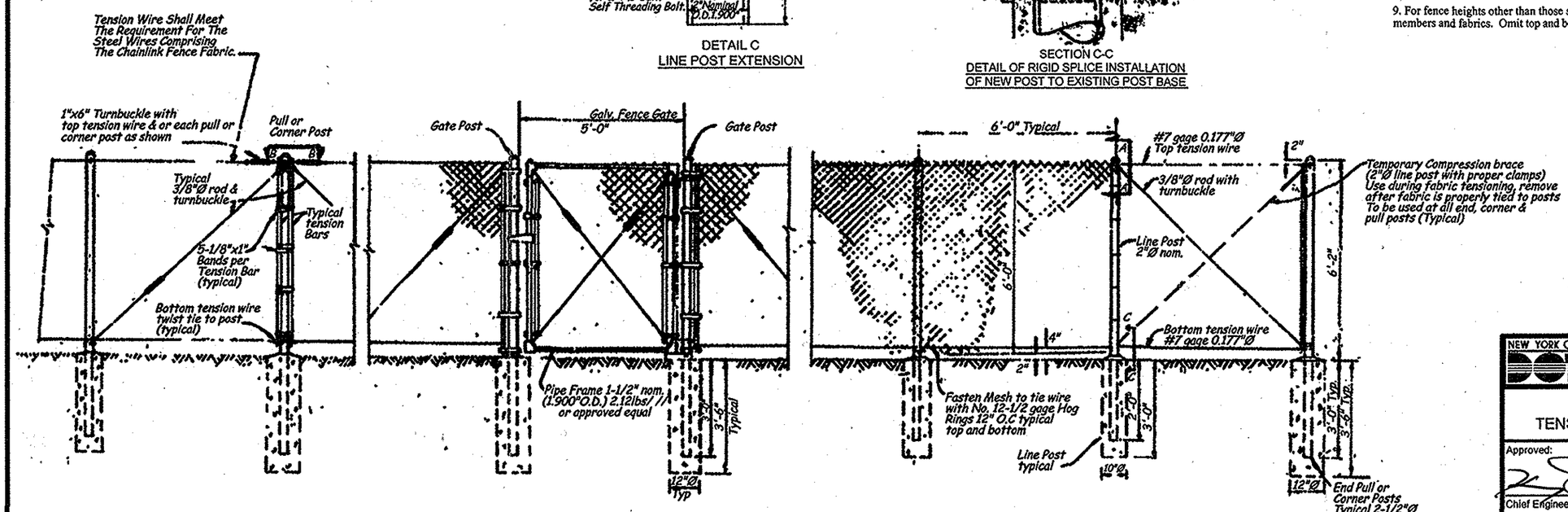

DETAIL OF RIGHT OF WAY FENCING

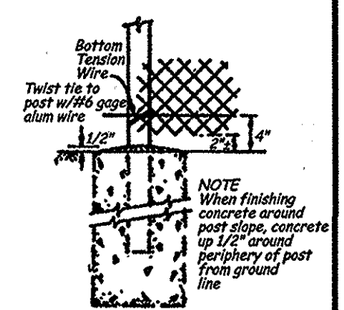

FOOTING DETAIL

REVISION NO.	DESCRIPTION	DATE	APPROVED

NEW YORK CITY DOT

New York City
Department of Transportation

CHAIN LINK FENCE DETAILS
TENSION WIRES TOP AND / OR BOTTOM

Approved:
Chief Engineer
Department of Transportation

Approved:
Associate Commissioner
Infrastructure/Design
Department of Design + Construction

Date Issued: 7/1/10

Scale: None

Drawing # H-1009

CHECKED BY: MA

BWS-H1009

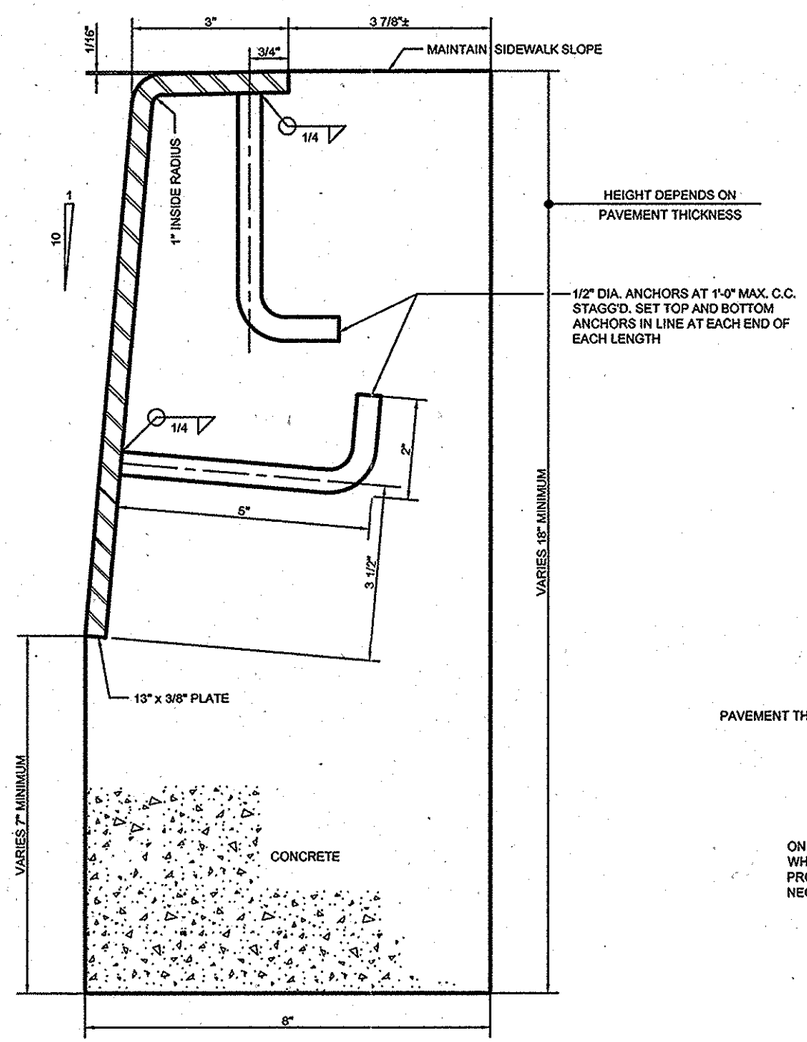

DETAIL
N.T.S.

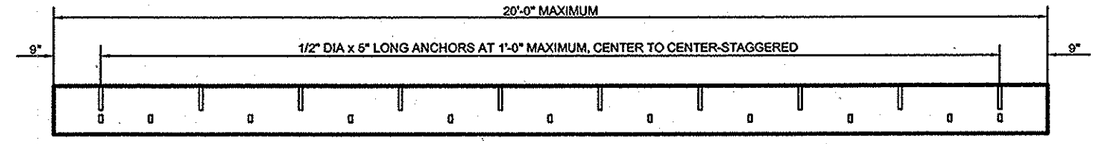

ELEVATION-STEEL FACING
N.T.S.

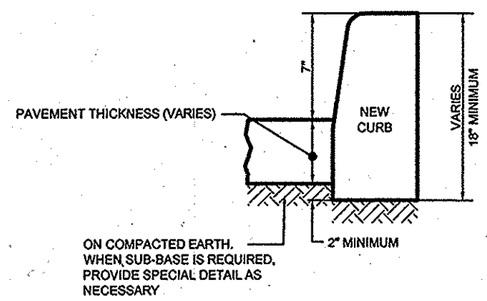

TYPICAL SECTION
N.T.S.

NOTES:

1. EXPANSION JOINTS IN THE STEEL CURB FACING AND CONCRETE BACKING SHALL BE AT A MAXIMUM SPACING OF 24 FEET.
2. THE EXPANSION JOINTS OF THE CURB AND STEEL CURB FACING SHALL LINE UP WITH THE EXPANSION JOINTS OF THE CONCRETE SIDEWALKS, WHEREVER POSSIBLE.
3. NO PIECE OF STEEL CURB FACING HAVING LESS THAN TWO (2) WELDED DOWELS MAY BE INSTALLED UNLESS IT IS WELDED TO THE ADJACENT STEEL CURB FACING.
4. 1/2" DIA. x 5" HEADED ANCHOR STUDS (GRANULAR OR SOLID FLUX FILLED) MAY BE SUBSTITUTED.
5. STRUCTURAL STEEL (A.S.T.M. DESIGNATION A36).
6. SURFACE TO BE CLEANED AND PAINTED AS PER NYCDOT STANDARD HIGHWAY SPECIFICATIONS, SECTION 2.13. COLOR OF TOP COAT SHALL BE GRAY AS APPROVED BY THE ENGINEER.
7. WHERE TWO (2) PIECES OF STEEL CURB FACING ARE JOINED BUT NOT WELDED, TWO (2) ONE-HALF (1/2) INCH RODS, TWENTY FOUR (24) INCHES LONG SHALL BE INSERTED INTO THE CONCRETE BACKING, ONE-HALF (1/2) THE LENGTH AT EACH SIDE OF THE JOINT.
8. CONCRETE TO BE CLASS B-32, AIR-ENTRAINED.
9. CORNER CURB:-VERTICAL FACE WILL BE ACCEPTABLE FOR CORNER CURBS PROVIDING THE ENDS ARE WARPED TO FORM A TRANSITION WITH ADJACENT BATTERED FACE CURBS.

REVISION NO.	DESCRIPTION	DATE	APPROVED

NEW YORK CITY DOT

New York City
Department of Transportation

STEEL FACED CONCRETE CURB
STEEL FACING TYPE D

Approved:
Chief Engineer
Department of Transportation

Approved:
Associate Commissioner
Infrastructure/Design
Department of Design + Construction

Date Issued: 2/1/10

Scale: None

Drawing # H-1010

CHECKED BY: MZ

DWS-H1010

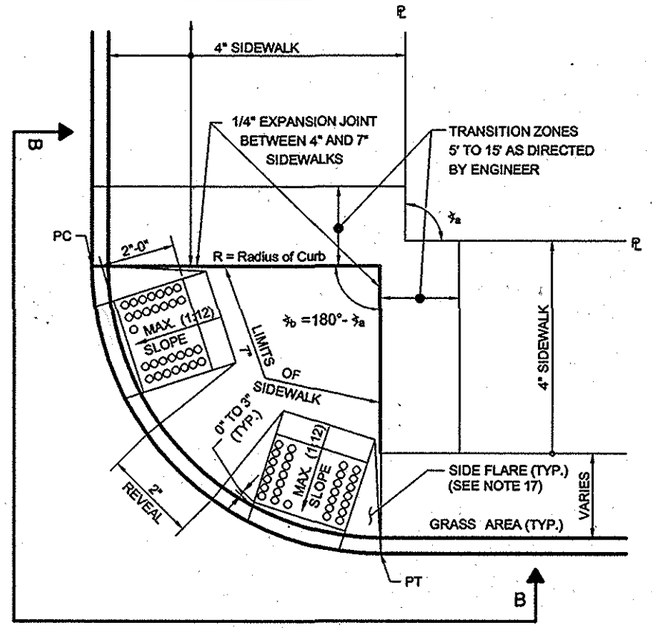

PLAN - CASE I, CASE III
N.T.S.

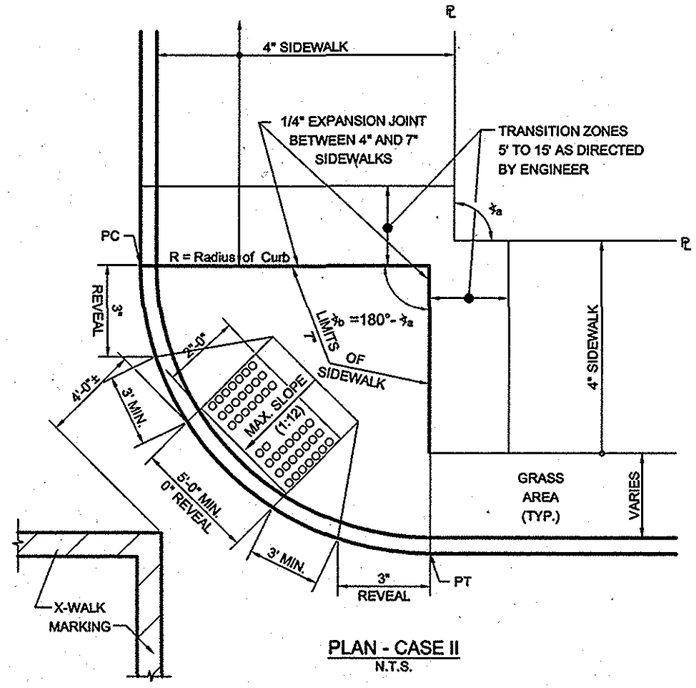

PLAN - CASE II
N.T.S.

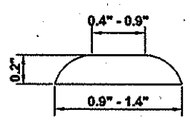

DOME SECTION

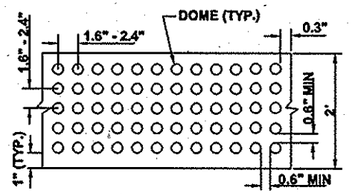

DOME SPACING

DETECTABLE WARNING SURFACE DETAILS

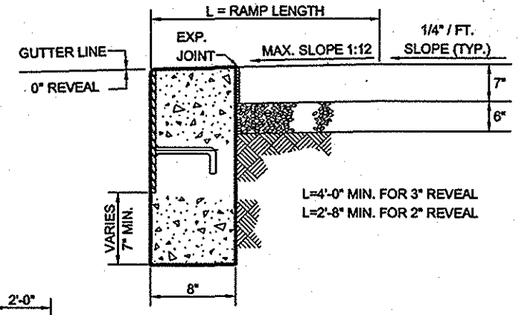

SECTION A-A
N.T.S.

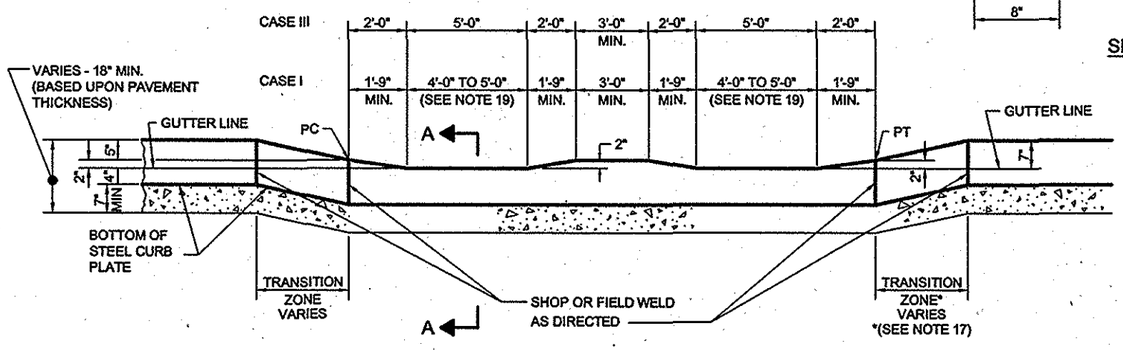

ELEVATION B-B
N.T.S.

NOTES

1. REFER TO H-1010 (LATEST REVISION) FOR STEEL FACED CURB-TYPE D.
2. ALL MATERIALS AND CONSTRUCTION METHODS USED SHALL CONFORM TO SECTIONS #4.08 / 4.09 / 4.13 / 4.13DE OF THE STANDARD SPECIFICATIONS, LATEST EDITION, AS AMENDED.
3. WHEN INSTALLING PEDESTRIAN RAMPS IN OTHER THAN PRE ENGINEERED CAPITAL RECONSTRUCTION PROJECTS, ALLOWANCE SHALL BE MADE FOR EXISTING CONDITIONS PROVIDED THAT THE SLOPE OF THE RAMP SHALL NOT EXCEED 1:12 AND THE ZERO INCH REVEAL IS OBTAINED. TO INSURE THAT SOUND ENGINEERING JUDGMENT IS USED IN MEETING EXISTING CONDITIONS, ANY AND ALL VARIATIONS FROM THE DETAILS OF CONSTRUCTION HEREIN SHOWN MUST HAVE THE APPROVAL OF BOTH THE ASSISTANT COMMISSIONER OF DESIGN AND THE ASSISTANT COMMISSIONER OF CONSTRUCTION.
4. CASE II PLAN SHALL BE USED ONLY WHERE EXPLICITLY DIRECTED BY THE ENGINEER AND APPROVED BY THE COMMISSIONER PRIOR TO DESIGN / INSTALLATION.
5. SURFACE OF ALL PEDESTRIAN RAMPS SHALL BE STABLE, FIRM AND SLIP RESISTANT. CONCRETE RAMP SURFACE SHALL HAVE A COARSE BROOM FINISH RUNNING PERPENDICULAR TO THE SLOPE, EXCLUSIVE OF THE DETECTABLE WARNING FIELDS.
6. LANDINGS BETWEEN THE PROPERTY LINES AND THE BACK EDGE OF RAMPS SHALL HAVE A MINIMUM CLEAR DIMENSION OF 5 FT. BY 5 FT. SQUARE; HOWEVER, WHERE CASE I RAMPS ARE USED THE MINIMUM CLEAR DIMENSION SHALL BE 4 FT. BY 4 FT. SQUARE. THE MAXIMUM CROSS SLOPE AT LANDINGS IS 1/4" PER FOOT IN ANY DIRECTION. LANDINGS MAY OVERLAP WITH ADJACENT LANDINGS OR A SINGLE LANDING MAY SERVE MULTIPLE CURB RAMPS.
7. ALL EXPOSED STEEL SURFACES SHALL BE GROUND SMOOTH.
8. ON FULL WIDTH SIDEWALKS, EXPANSION JOINTS TO BE PLACED AT BUILDING FACES, STRUCTURES AS WELL AS AT BACK FACE OF CURB.
9. ALL DIMENSIONS AND NOTES SHALL BE APPLICABLE TO GRANITE CURB INSTALLATIONS AND / OR CONCRETE CURB INSTALLATIONS.
10. THE FOLLOWING GUIDELINES SHALL BE APPLIED IN DETERMINING THE APPLICATIONS OF THE SPECIFIC CASES WHERE THE INTERIOR $\measuredangle_b = 180° - \measuredangle_a$

CASE I FOR CORNERS WITH	CASE II FOR CORNERS WITH	CASE III FOR CORNERS WITH
R=12' INTERIOR $\measuredangle_b \geq 90°$	R<12' INTERIOR $\measuredangle_b$ ANY ANGLE	R>15' INTERIOR $\measuredangle_b$ ANY ANGLE
R=13' INTERIOR $\measuredangle_b$ BET. 83° & 93°	R=12' INTERIOR $\measuredangle_b < 90°$	R=15' INTERIOR $\measuredangle_b \geq 81°$
R=14' INTERIOR $\measuredangle_b$ BET. 77° & 90°	R=13' INTERIOR $\measuredangle_b < 83°$	R=14' INTERIOR $\measuredangle_b \geq 90°$
R=15' INTERIOR $\measuredangle_b$ BET. 72° & 81°	R=14' INTERIOR $\measuredangle_b < 77°$	R=13' INTERIOR $\measuredangle_b \geq 93°$
	R=15' INTERIOR $\measuredangle_b < 72°$	

11. THE DETAILS PROVIDED ARE NOT DRAWN TO SCALE, THE QUANTITY OF DOMES DEPICTED ON THE DETECTABLE WARNING FIELD (THE DOMES AND THE ENTIRE 2 FT. WIDE SURFACE) IS FOR ILLUSTRATION ONLY.
12. THE SIZE OF THE DETECTABLE WARNING FIELD SHALL BE 2FT. IN THE DIRECTION OF TRAVEL AND SHALL EXTEND THE FULL WIDTH OF THE CURB RAMP AS SHOWN, EXCLUSIVE OF SIDE FLARES.
13. DETECTABLE WARNINGS SHALL BE LOCATED SO THAT THE EDGE OF THE WARNING FIELD NEAREST TO THE ROADWAY OR STREET SURFACE IS 0" TO 3" FROM THE BACK OF CURB, AS SHOWN.
14. DOME ALIGNMENT, DOMES SHALL BE ALIGNED ON A SQUARE GRID IN THE PREDOMINANT DIRECTION OF TRAVEL.
15. COLOR REQUIREMENT, THE DETECTABLE WARNING FIELD SHALL BE THE COLOR SPECIFIED IN THE CONTRACT DOCUMENTS OR SHALL VISUALLY CONTRAST WITH THE ADJOINING CURB RAMP, OR OTHER ADJACENT WALKWAY SURFACES WHERE THERE IS NO CURB RAMP. EITHER LIGHT-ON-DARK OR DARK-ON-LIGHT AS DEFINED IN THE AMERICANS WITH DISABILITIES ACCESSIBILITY GUIDELINES (ADAAG).
16. PAYMENT LINES FOR DETECTABLE WARNING UNITS ARE THE 2 FT. DIMENSION SHOWN IN THE DETAILS EXTENDING THE FULL WIDTH OF THE CURB RAMP.
17. WHEN STREET FURNITURE (LAMP POSTS, TRAFFIC SIGNAL POSTS, UTILITY POSTS, HYDRANTS, ETC.) INTERFERES WITH THE CONSTRUCTION OF A SIDE FLARE ADJACENT TO A NON-WALKING (GRASS) AREA, SAID SIDE FLARE SHALL BE REPLACED WITH A CONCRETE CURB, AS DIRECTED BY THE ENGINEER, PROVIDED THE INTERFERENCE CAN BE AVOIDED AND LEFT IN PLACE.
18. IN CASE OF INFEASIBILITY AND IN ORDER TO CLEAR INTERFERENCE WITH THE STREET FURNITURE (LAMPPOSTS, TRAFFIC SIGNAL POSTS, UTILITY POST, HYDRANTS, ETC.), UPON DOCUMENTATION AND APPROVAL BY THE ASSISTANT COMMISSIONER OF THE CONSTRUCTION DIVISION, THE WIDTH OF THE RAMP COULD BE REDUCED TO NO LESS THAN 3'-0" FEET.
19. PEDESTRIAN RAMPS SHALL BE INSTALLED PARALLEL TO THE CROSSWALKS WHERE FEASIBLE. HOWEVER, WHERE DUE TO OBSTRUCTIONS AND INTERFERENCE WITH THE STREET FURNITURE (LAMPPOST, TRAFFIC SIGNAL POSTS, HYDRANTS, ETC.) IT WOULD NOT BE FEASIBLE TO INSTALL THE RAMPS PARALLEL TO THE CROSSWALKS, UPON DOCUMENTATION AND AS ORDERED AND APPROVED BY THE ENGINEER THE RAMPS COULD BE REORIENTED TO CLEAR THE OBSTRUCTIONS.

REVISION NO.	DESCRIPTION	DATE	APPROVED

NEW YORK CITY

New York City
Department of Transportation

SIDEWALK PEDESTRIAN RAMPS

Approved:
Chief Engineer
Department of Transportation

Approved:
Associate Commissioner
Infrastructure/Design
Department of Design + Construction

Date Issued: 7/1/10

Scale: None

Drawing # H-1011

CHECKED BY: MZ

HWS-H1011

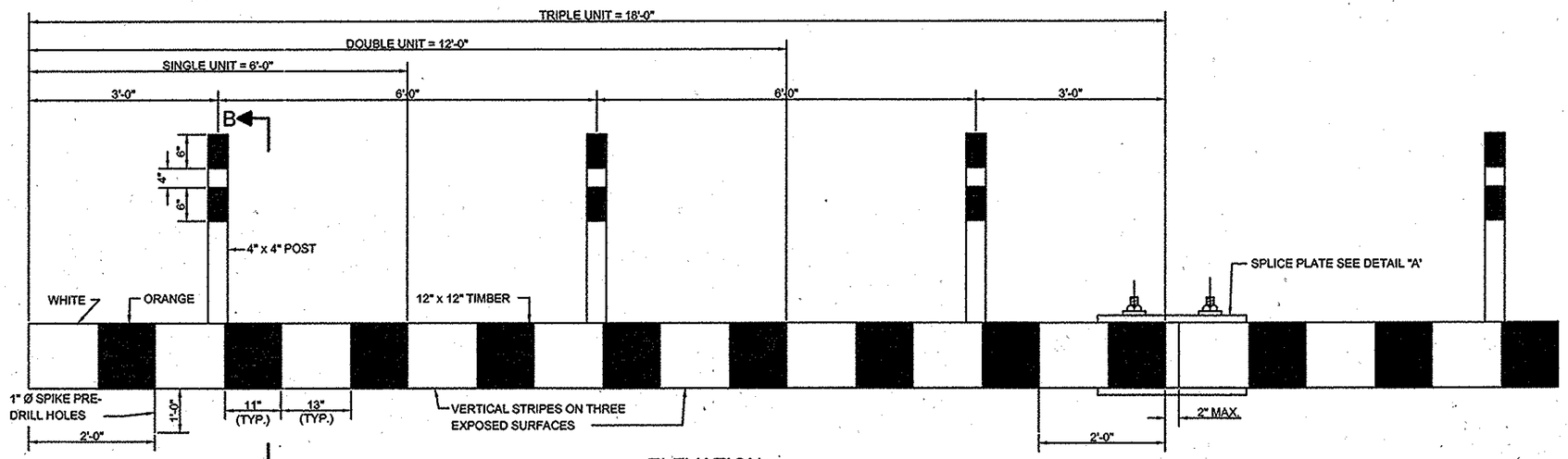

ELEVATION

N.T.S.

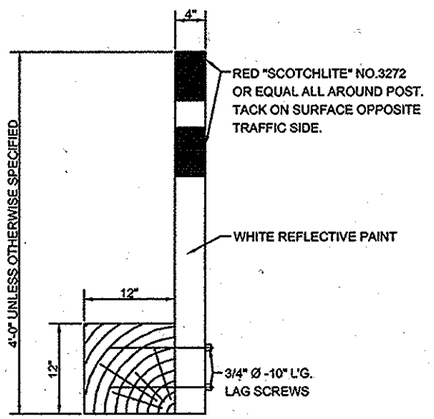

SECTION B-B

SCALE: 1" = 1'-0"

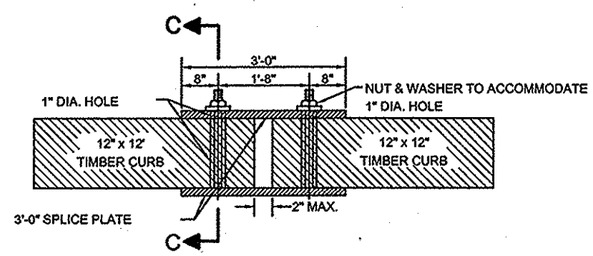

DETAIL "A"

N.T.S.

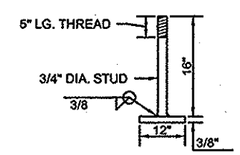

SECTION C-C

N.T.S.

GENERAL NOTES:

1. ALL TIMBER AND LUMBER TO BE DENSE STRUCTURAL GRADE DOUGLAS FIR OR LONGLEAF YELLOW PINE.
2. WHITE AND ORANGE EXTERIOR ENAMEL.
3. WHITE TO BE REFLECTORIZED.

REVISION NO.	DESCRIPTION	DATE	APPROVED

NEW YORK CITY DOT

New York City
Department of Transportation

TIMBER CURB

Approved:
Chief Engineer
Department of Transportation

Approved:
Associate Commissioner
Infrastructure/Design
Department of Design + Construction

Date Issued: 7/1/10

Scale: None

Drawing # H-1012

CHECKED BY: MZ

DWS-H1012

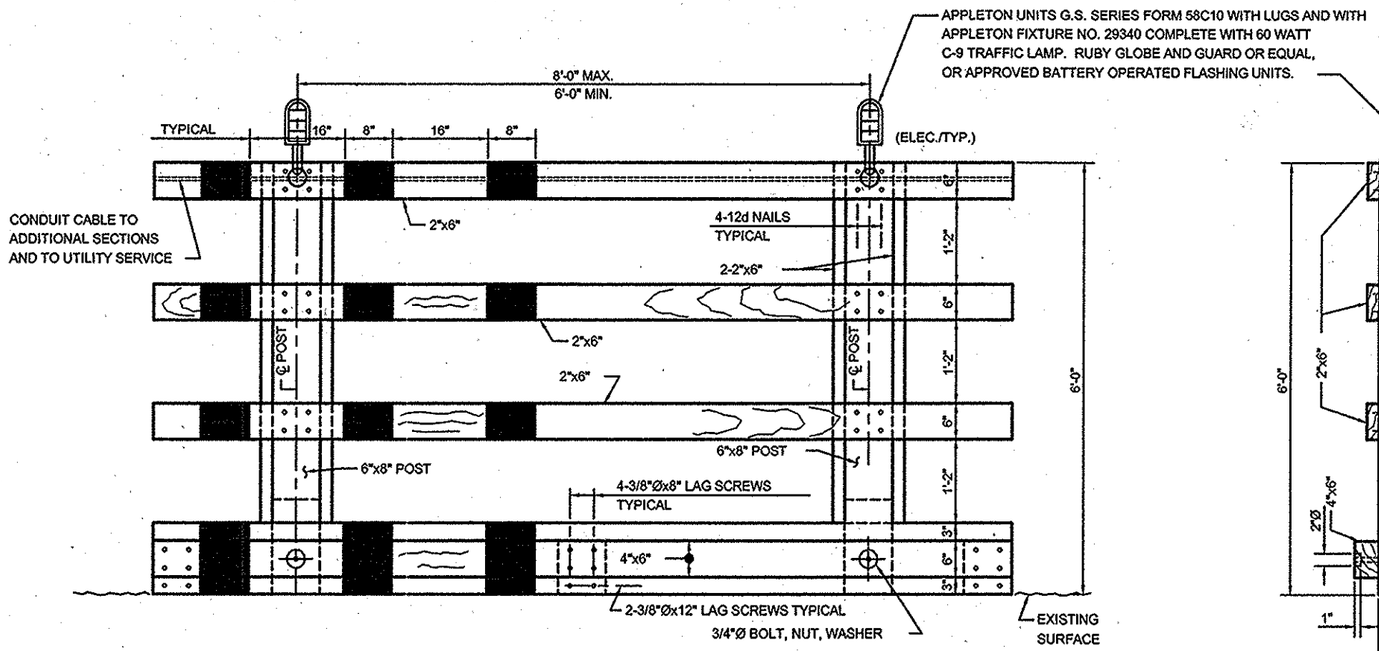

ELEVATION
NOT TO SCALE

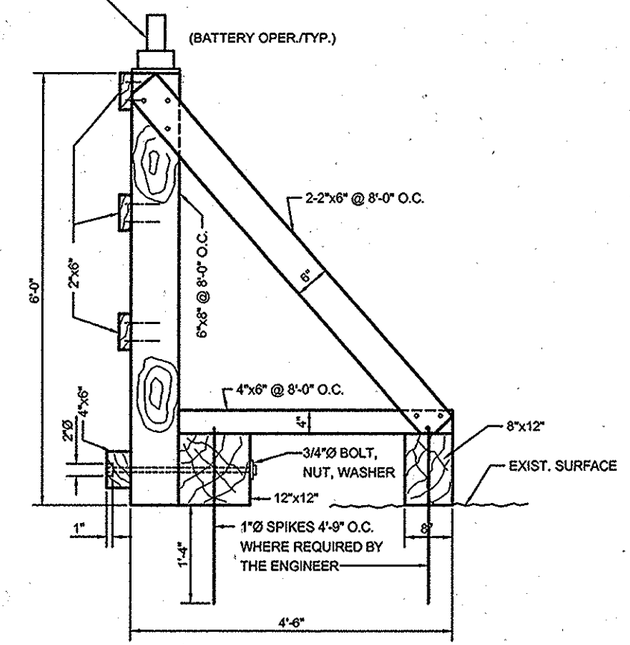

SIDE VIEW
NOT TO SCALE

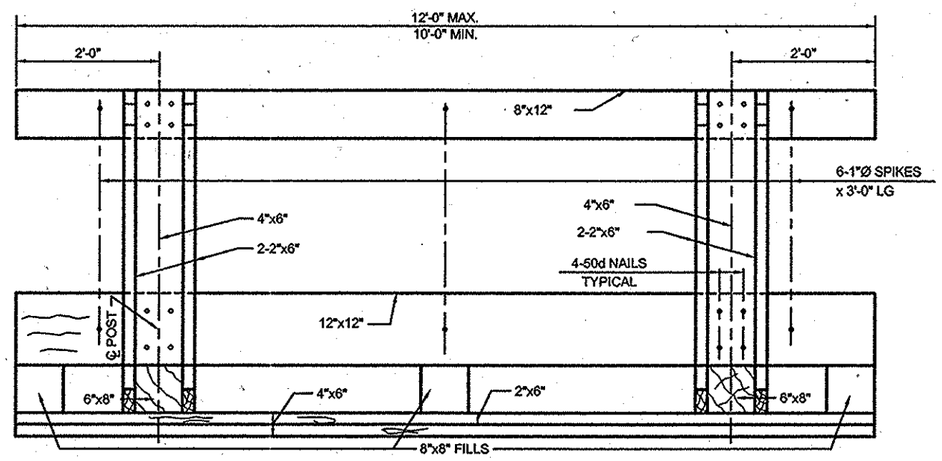

PLAN
NOT TO SCALE

NOTES:

1. ALL TIMBER SHALL BE DOUGLAS FIR GRADE NO. 1 OR EQUAL.
2. ALL WORK SHALL CONFORM WITH NATIONAL DESIGN SPECIFICATIONS FOR STRESS GRADE LUMBER AND ITS FASTENINGS.
3. ALL PAINTING SHALL BE ON TRAFFIC FACE, 2-COATS APPROVED ORANGE AND STAIN RESISTANT REFLECTORIZED WHITE.
4. ALL ELECTRICAL WORK FOR BARRICADE LIGHTING SHALL CONFORM TO THE DETAILS SHOWN IN D.W.S.G. & E. STANDARD DRAWING NO. H-3009 AND IN D.W.S.G. & E. "GENERAL SPECIFICATION FOR THE INSTALLATION OF LIGHTING SYSTEMS".
5. THIS STANDARD APPLIES FOR BOTH BATTERY OPERATED FLASHING UNITS OR ELECTRICAL UNITS AS SHOWN. PROJECT SPECIFICATIONS WILL DICTATE THE TYPE OF POWER SUPPLY.

REVISION NO.	DESCRIPTION	DATE	APPROVED

NEW YORK CITY DOT

New York City
Department of Transportation

ILLUMINATED TIMBER BARRICADE

Approved:
Chief Engineer
Department of Transportation

Approved:
Associate Commissioner
Infrastructure/Design
Department of Design + Construction

Date Issued: 7/1/10

Scale: None

Drawing # H-1013

CHECKED BY: MZ

HWS-H1013

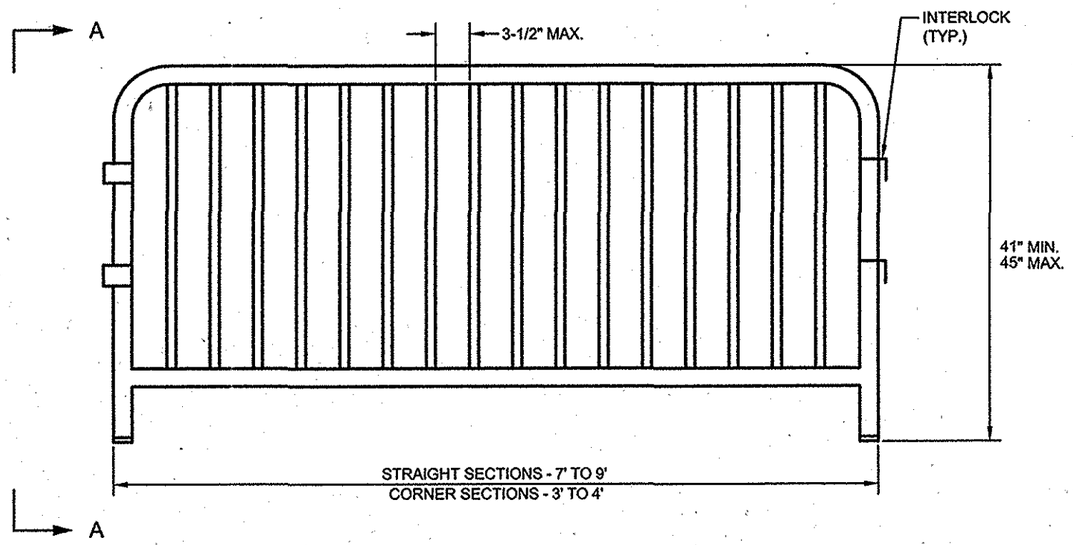

ELEVATION
N.T.S.

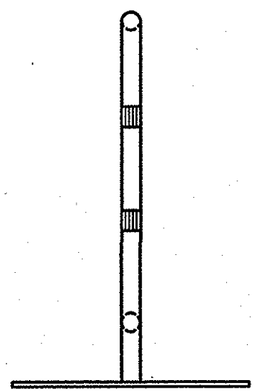

SECTION A-A
N.T.S.

REVISION NO.	DESCRIPTION	DATE	APPROVED

NEW YORK CITY DOT

New York City
Department of Transportation

TEMPORARY PEDESTRIAN
STEEL BARRICADE

Approved:
Chief Engineer
Department of Transportation

Approved:
Associate Commissioner
Infrastructure/Design
Department of Design + Construction

Date Issued: 7/1/10

Scale: None

Drawing # H-1014

CHECKED BY: MZ

DWS-H1014

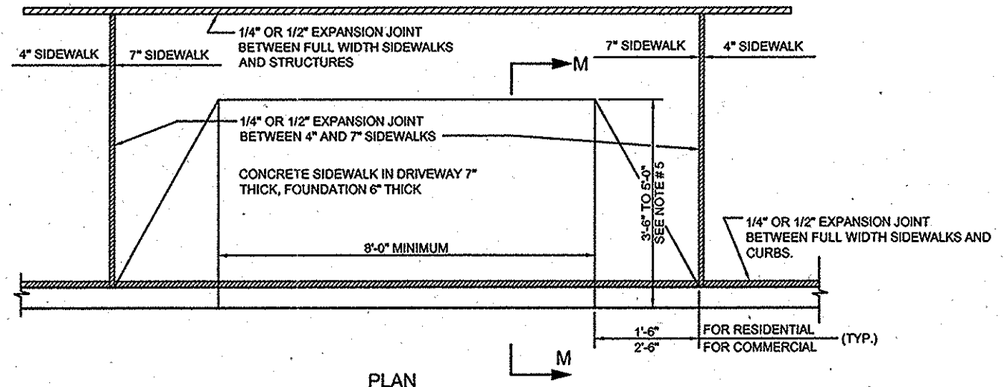

PLAN
N.T.S.

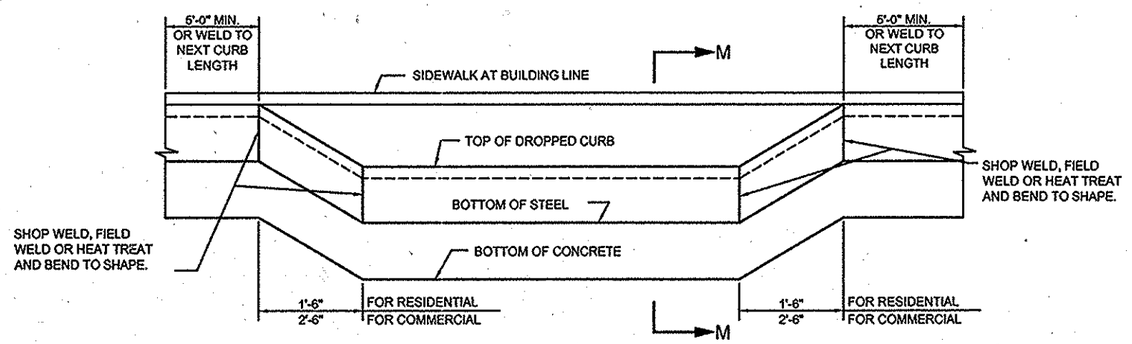

ELEVATION
N.T.S.

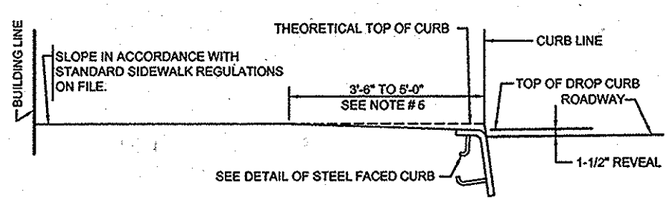

SECTION M-M
N.T.S.

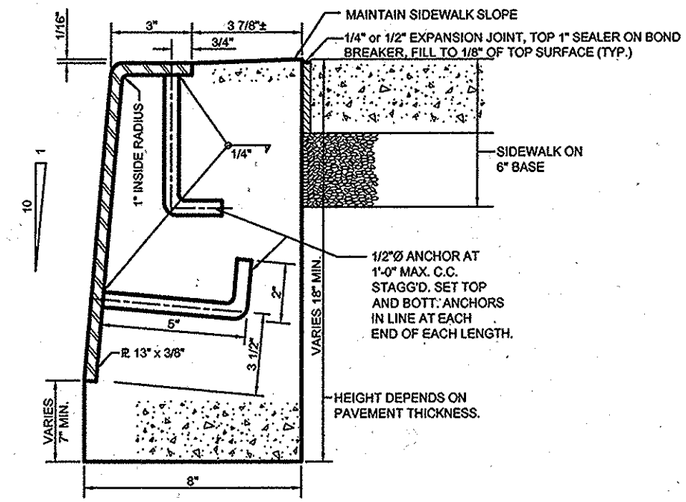

DETAIL-STEEL FACED CURB
N.T.S.

NOTES:

1. 1/2" Ø x 5" HEADED ANCHOR STUDS (GRANULAR OR SOLID FLUX FILLED) MAY BE SUBSTITUTED.
2. STRUCTURAL STEEL AS PER ASTM DESIGNATION A-36.
3. STEEL FACING TO BE CLEANED AND PAINTED AS PER SUBSECTION 2.13.4 OF THE NYCDOT STANDARD HIGHWAY SPECIFICATION. THE COLOR OF TOP COAT SHALL BE GRAY AS APPROVED BY THE ENGINEER.
4. CONCRETE TO BE CLASS B-32, TYPE II A.
5. 3'-6" TO 5'-0" AS ORDERED BY THE ENGINEER EXCEPT FOR THE FIRE DEPARTMENT DRIVEWAYS WHICH WILL SLOPE STRAIGHT BACK TO THE PROPERTY LINE. FIRE DEPARTMENT DRIVEWAYS SHALL BE TYPE III SIDEWALK-SEE H1045.

REVISION NO.	DESCRIPTION	DATE	APPROVED

NEW YORK CITY DOT

New York City
Department of Transportation

STEEL FACED DROP CURB
DRIVEWAYS

Approved:
Chief Engineer
Department of Transportation

Approved:
Associate Commissioner
Infrastructure/Design
Department of Design + Construction

Date Issued: 7/1/10

Scale: None

Drawing # H-1015

CHECKED BY: MZ

HWS-H1015

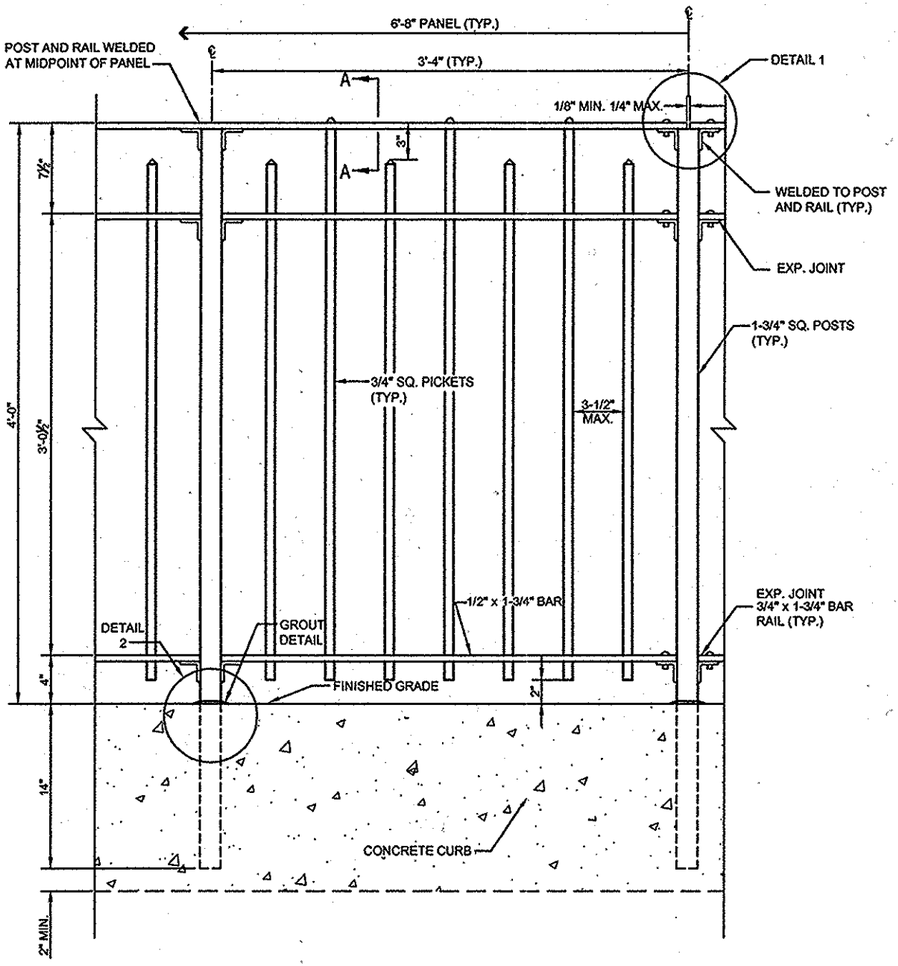

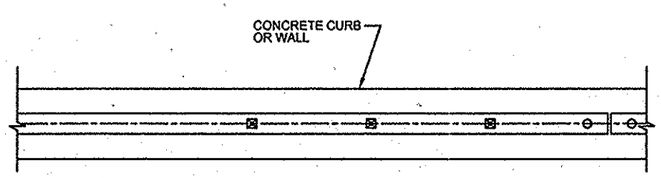

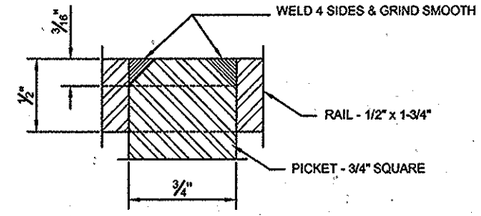

SECTION A-A
TYPICAL WELD

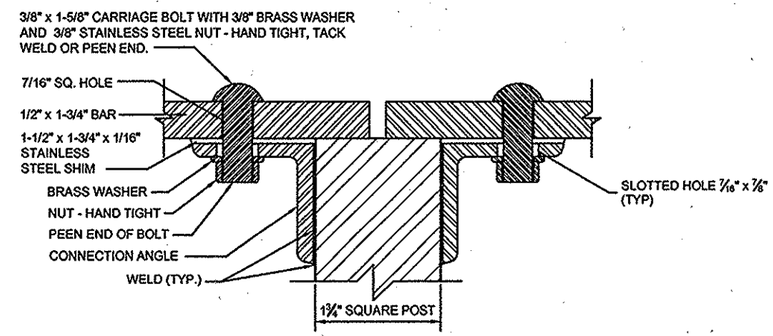

DETAIL 1
PANEL TO POST DETAIL AT EXP. JOINT

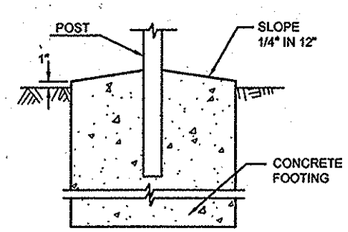

CASE - I
INDIVIDUAL FOOTING IN EARTH

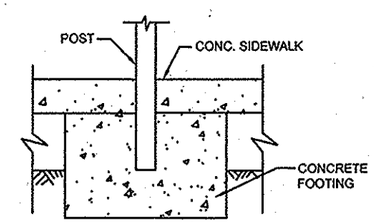

CASE - II
INDIVIDUAL FOOTING IN SIDEWALK AREAS
ADDITIONAL EMBEDMENT DETAILS

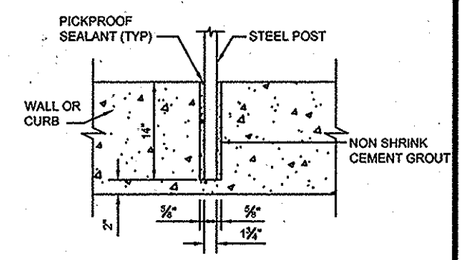

CASE - III
FOOTING AT CURB OR WALL (TYP)

DETAIL 2

NOTES

1. SLEEVES REQUIRED IN NEW CONCRETE MASONRY STRUCTURES
2. SLEEVES NOT REQUIRED FOR INDIVIDUAL NEW FOOTING.
3. IN EXISTING CONCRETE OR MASONRY STRUCTURES, CONTRACTOR TO DRILL 3" DIA. HOLES FOR 1-3/4" x 1-3/4" POSTS.
4. ALL STEEL SHALL CONFORM TO SPECIFICATION C1015 OF THE A.I.S.I.
5. ALL JOINTS TO BE WELDED UNLESS NOTED OTHERWISE.
6. ALL STEEL TO BE PAINTED WITH ONE (1) SHOP COAT OF PRIMER. ALL STEEL FACING WHICH WILL BE EXPOSED TO VIEW AFTER INSTALLATION SHALL BE GIVEN ONE (1) SHOP COAT OF INTERMEDIATE AND ONE (1) SHOP COAT (OR ROLLED FIELD COAT) OF FINISH TOP COAT IN COMPLIANCE WITH THE REQUIREMENTS OF SUBSECTION 2.13.4 OF THE NYC DOT STANDARD HIGHWAY SPECIFICATIONS. THE COLOR OF TOP COAT SHALL BE AS APPROVED BY THE ENGINEER.
7. ALL FASTENING HARDWARE TO BE COMPATIBLE.
8. CONCRETE IN INDIVIDUAL FOOTINGS - CLASS B-25, TYPE IIA.
9. CEMENT GROUT - 1:1 MIX.

REVISION NO.	DESCRIPTION	DATE	APPROVED

NEW YORK CITY DOT

New York City
Department of Transportation

BAR PICKET FENCE
(4'-0" HIGH)

Approved:
Chief Engineer
Department of Transportation

Approved:
Associate Commissioner
Infrastructure/Design
Department of Design + Construction

Date Issued: 7/1/10

Scale: None

Drawing # H-1017

CHECKED BY: MJ

HWS-H1017

1 10'-0" HIGH CHAIN LINK FENCE *

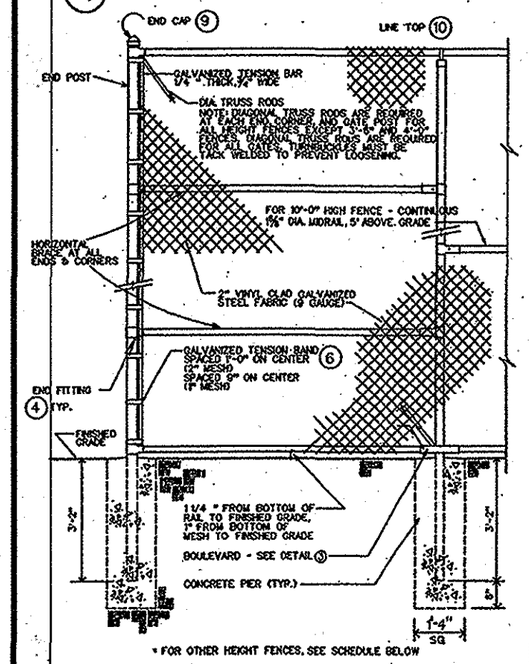

2 CORNER FITTING

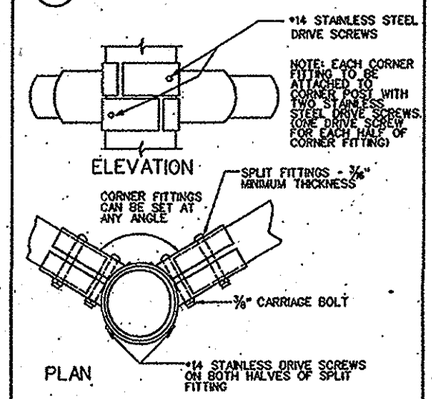

3 BOULEVARD

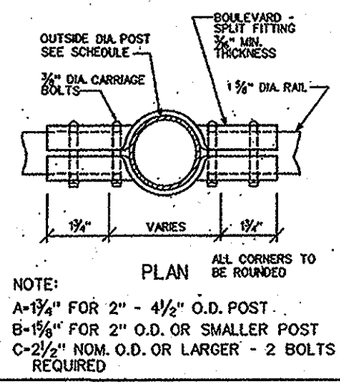

NOTE:
A=1 3/4" FOR 2" - 4 1/2" O.D. POST
B=1 5/8" FOR 2" O.D. OR SMALLER POST
C=2 1/2" NOM. O.D. OR LARGER - 2 BOLTS REQUIRED

4 END FITTING

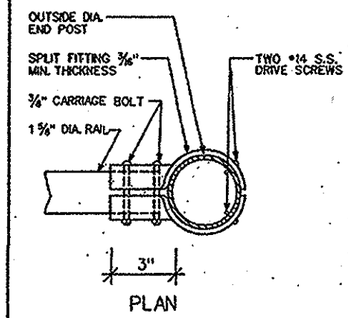

NOTE: MINIMUM WIDTH OF END FITTING TO BE 2 1/4"

5 TOP RAIL COUPLING

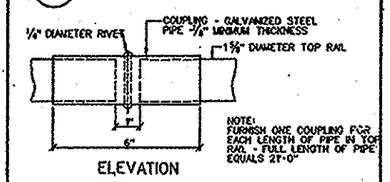

6 TENSION MEMBERS

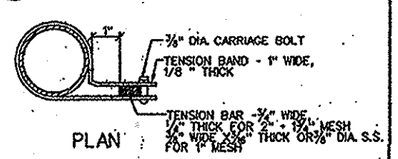

7 CORNER SPLIT FITTING

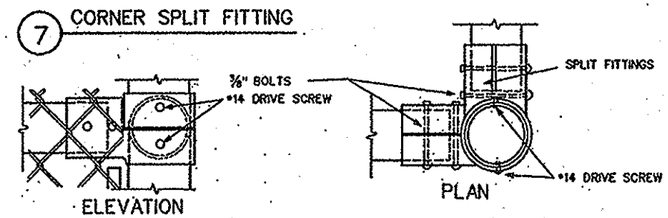

BOLT AND FABRIC NOTES

PEEN END OF ALL BOLTS.

BOLTS WHICH ARE INSTALLED 6' OR LESS ABOVE GRADE SHALL NOT PROTUDE MORE THAN 1/4" BEYOND THE NUT AFTER TIGHTENING. ALL ROUGH EDGES SHALL BE FILED SMOOTH TO THE SATISFACTION OF THE ENGINEER.

ON FENCES OVER 12 FEET HIGH WHERE THE TWO WIDTHS OF FABRIC ARE REQUIRED, THE BOTTOM PIECE SHALL BE KNUCKLED TOP AND BOTTOM AND THE TOP PIECE KNUCKLED AT BOTTOM AND BARBED AT TOP.

THE TWO PIECES SHALL BE SPLICED IN SUCH A WAY AS TO GIVE A FINISHED NEAT APPEARANCE.

FABRIC TO BE KNUCKLED AT TOP AND BOTTOM RAILS ON FENCES UP TO AND INCLUDING 6'-0" HIGH AND BARBED AT TOP RAIL ON FENCES OVER 6'-0" HIGH.

8 SMALL POST CAP

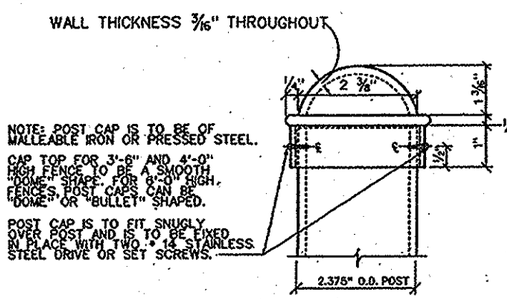

NOTE: POST CAP IS TO BE OF MALLEABLE IRON OR PRESSED STEEL.

CAP TOP FOR 3'-6" AND 4'-0" HIGH FENCE TO BE A SMOOTH "DOME" SHAPE. FOR 6'-0" HIGH FENCES, POST CAPS CAN BE "DOME" OR "BULLET" SHAPED.

POST CAP IS TO FIT SNUGLY OVER POST AND IS TO BE FIXED IN PLACE WITH TWO #14 STAINLESS STEEL DRIVE OR SET SCREWS.

9 END, CORNER, & GATE POST CAP

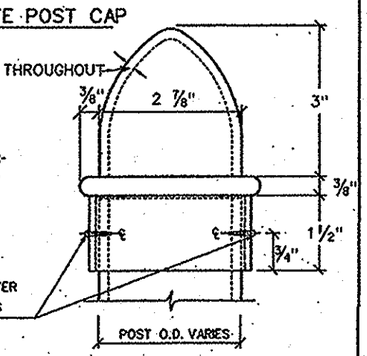

NOTE: POST CAP IS TO BE OF MALLEABLE IRON.

FOR 4" OUTSIDE DIAMETER POST, POST CAP SHALL POSSESS DIMENSIONS THAT ARE IN PROPORTION TO DIMENSIONS BELOW FOR 2 7/8" OUTSIDE DIAMETER POST CAP.

CAP TOPS FOR 3" OUTSIDE DIA. AND 4" OUTSIDE DIA. POSTS ARE TO POSSESS A SMOOTH "BULLET" SHAPE. FOR 2 1/2" OUTSIDE DIA. POST CAP SEE DETAIL 9

POST CAP IS TO FIT SNUGLY OVER POST AND IS TO BE FIXED IN PLACE WITH TWO #14 STAINLESS STEEL DRIVE OR SET SCREWS.

10 POST LINE TOP

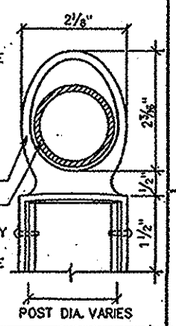

NOTE: WIDTH OF LINE TOP OVAL TO BE MINIMUM OF 2 1/8" AND A MAXIMUM OF 2 3/16". LINE TOP IS TO BE OF MALLEABLE IRON.

INSIDE OF LINE TOP OVAL IS TO BE ALIGNED WITH OUTSIDE "WALL" OF LINE POST. CHAIN LINK MESH MUST BE STRAIGHT FROM LINE POST TO TOP RAIL.

WALL THICKNESS TO BE 3/16" THROUGHOUT

1 5/8" DIA. TOP RAIL

POST CAP IS TO FIT SNUGLY OVER POST AND IS TO BE FIXED IN PLACE WITH TWO #14 STAINLESS STEEL DRIVE OR SET SCREWS.

WIRE FABRIC NOTES

THE MESH SHALL BE PLACED ON THE OUTSIDE OF THE POSTS OF ALL EXTERIOR CHAINLINK FENCES INCLUDING HOODED BACKSTOPS AND HANDBALL COURT FENCES WHERE THESE ARE AN INTEGRAL PART OF THE EXTERIOR FENCE.

SCHEDULE OF SIZES OF MEMBERS - AS PER ASTM A 53, ALL SIZES NPS

HEIGHT OF FENCE	DIAMETER OF LINE POSTS	POST SPACING MAXIMUM	CORNER & END POST	TOP RAIL	MID RAILS	BOTTOM RAIL	DEPTH OF POST INTO CORB AND FTG AT: LINE POST	DEPTH OF POST INTO CORB AND FTG AT: END/CORNER/GATE POST	HORIZONTAL BRACES AT CORNER & END POST	DIAGONAL BRACES
3'-6" & 4'-0"	2"	6'-0"	2 1/2"	1 5/8"	0	1 5/8"	1'-0"	1'-0"	0	0
6'-0"	2"	6'-0"	2 1/2"	1 5/8"	0	1 5/8"	1'-8"	1'-8"	0	1/2" DIA.
8'-0"	2 1/2"	8'-0"	3"	1 5/8"	0	1 5/8"	1'-8"	1'-8"	1 AT 1 5/8"	1/2" DIA.
10'-0"	3"	10'-0"	4"	1 5/8"	1 - 1 5/8"	1 5/8"	3'-2"	3'-2"	2 AT 1 5/8"	1/2" DIA.
12'-0"	3"	10'-0"	4"	1 5/8"	1 - 1 5/8"	1 5/8"	3'-2"	4'-2"	2 AT 1 5/8"	1/2" DIA.
14'-0"	3 1/2"	10'-0"	4"	1 5/8"	2 - 1 5/8"	1 5/8"	3'-2"	4'-2"	2 AT 1 5/8"	1/2" DIA.
16'-0"	3 1/2"	10'-0"	4"	1 5/8"	2 - 1 5/8"	1 5/8"	3'-2"	4'-2"	2 AT 1 5/8"	1/2" DIA.
18'-0"	3 1/2"	10'-0"	4"	1 5/8"	2 - 1 5/8"	1 5/8"	3'-2"	4'-2"	2 AT 1 5/8"	1/2" DIA.
20'-0"	4 1/2"	10'-0"	4 1/2"	1 5/8"	3 - 1 5/8"	1 5/8"	4'-2"	4'-6"	3 AT 1 5/8"	1/2" DIA.

FABRIC WIDTHS

HEIGHT OF FENCE	WIDTH OF BOTTOM FABRIC	WIDTH OF TOP FABRIC
3'-6" - 4'-0"	3'-6" - 4'-0"	0
6'-0"	6'-0"	0
8'-0"	8'-0"	0
10'-0"	10'-0"	0
12'-0"	8'-0"	4'-0"
14'-0"	10'-0"	4'-0"
16'-0"	10'-0"	6'-0"
18'-0"	10'-0"	8'-0"
20'-0"	10'-0"	10'-0"

PIPE SCHEDULE

NOMINAL OUTSIDE DIAMETER	ACTUAL OUTSIDE DIAMETER
1 5/8"	1.660
2"	2.375
2 1/2"	2.875
3"	3.500
3 1/2"	4.000
4"	4.500
4 1/2"	5.000

PIPE & RAIL NOTES

PIPE POSTS AND RAILS SHALL BE TYPE I OR TYPE II:

TYPE I - ROUND MEMBERS SHALL BE HOT DIPPED GALVANIZED CONFORMING TO ASTM A - 53 STANDARD WEIGHT SCHEDULE 40

TYPE II - ROUND MEMBERS SHALL BE MANUFACTURED FROM STEEL CONFORMING TO ASTM A - 569 COLD ROLLED WELDED AND HAVE TENSILE STRENGTH OF 50,000 PSI GIVEN CORROSION PROTECTION AS PER SPEC FOR SS - 40

REVISION NO.	DESCRIPTION	DATE	APPROVED

CHECKED BY: RAS

NWS-H1021-1

NEW YORK CITY DOT

New York City
Department of Transportation

CHAIN LINK FENCE - DETAILS

Approved:
Chief Engineer
Department of Transportation

Approved:
Associate Commissioner
Infrastructure/Design
Department of Design + Construction

Date Issued: 7/1/10

Scale: None

Drawing # H-1021-1

1 EXTEND FENCE HEIGHT - SECTION

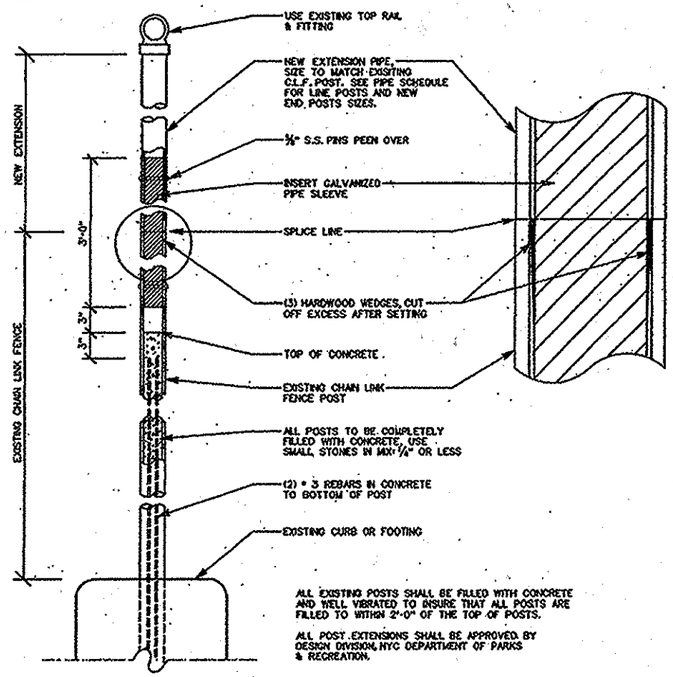

2 DIFFERENT CURB ELEVATIONS

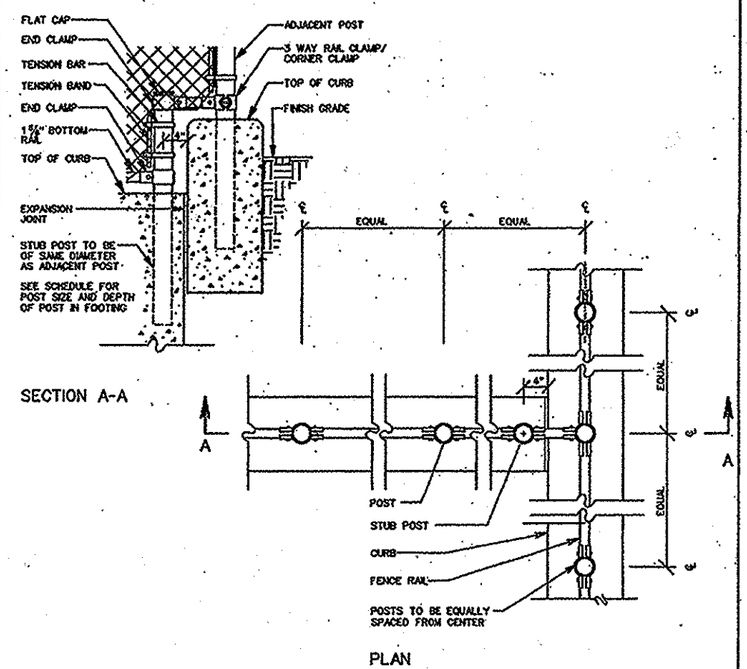

3 SUPPLY NEW PORTAL

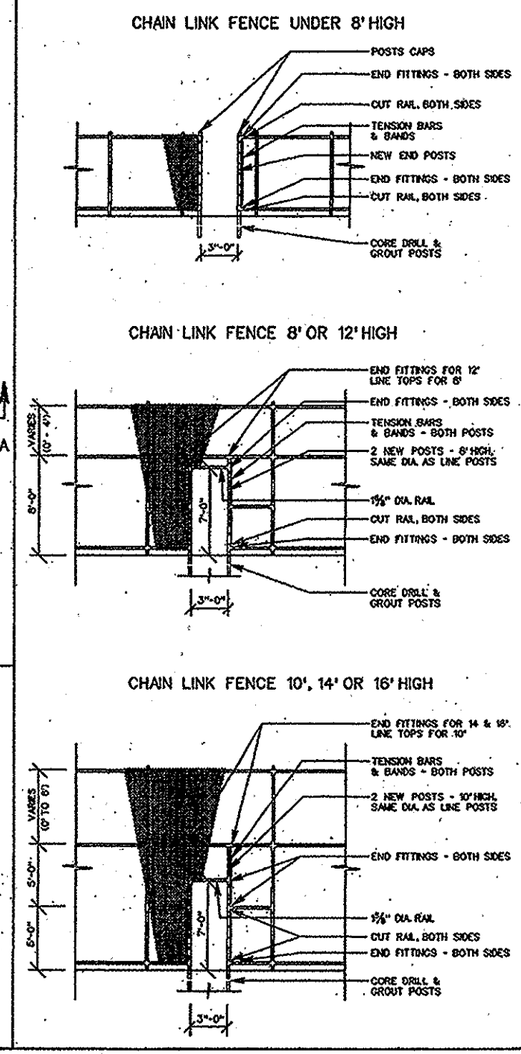

4 PROTECTIVE END PIECE

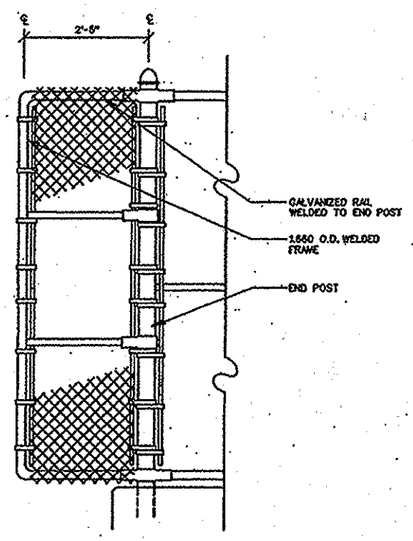

5 REPLACE FENCE POST 10'-0" HT. & OVER

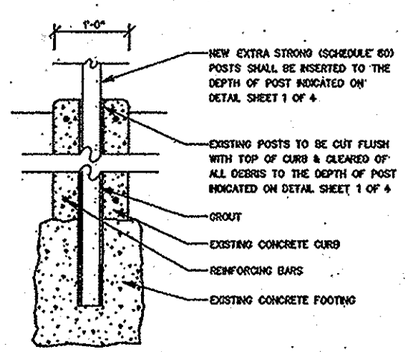

6 REPLACE FENCE POST UP TO 8'-0"

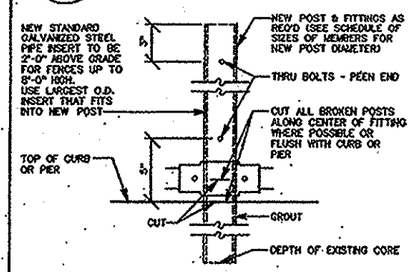

SCHEDULE FOR POST INSERTS

EXISTING POST DIAMETER	NOMINAL O.D. PIPE SIZE	2"	2½"	3"	3½"	4"
	ACTUAL O.D. PIPE SIZE	1.9"	2.375"	2.875"	3½"	4"
	ACTUAL I.D. PIPE SIZE	1.610"	2.067"	2.469"	3.068"	3.548"
SLEEVE DIAMETER REQUIRED	NOMINAL O.D. PIPE SLEEVE	SLEEVE METHOD NOT POSSIBLE FOR 2" O.D. PIPE	2"	2½"	3"	3½"
	ACTUAL O.D. PIPE SLEEVE		1.9"	2.375"	2.075"	3½"

REVISION NO.	DESCRIPTION	DATE	APPROVED

NEW YORK CITY DOT

New York City
Department of Transportation

CHAIN LINK FENCE - SPECIAL CONDITIONS

Approved:
Chief Engineer
Department of Transportation

Approved:
Associate Commissioner
Infrastructure/Design
Department of Design + Construction

Date Issued: 7/1/10

Scale: None

Drawing # H-10021-2

CHECKED BY: MZ

HWS-H10021-2

1 4'-0" & 3'-6" FENCE

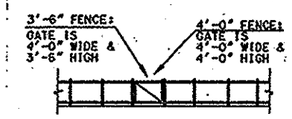

5 6'-0" FENCE

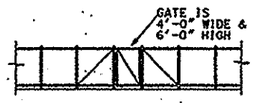

6 8'-0" FENCE

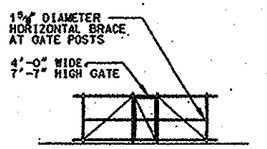

7 10'-0" FENCE

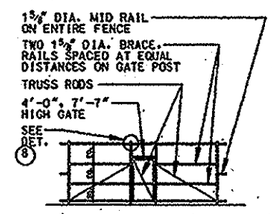

12 12'-0" FENCE

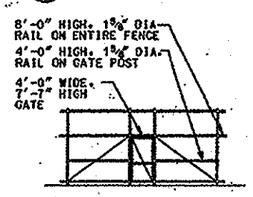

13 16'-0" FENCE

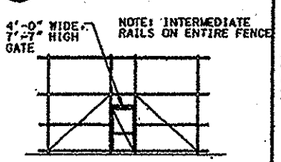

2 4'-0" SINGLE FENCE GATE

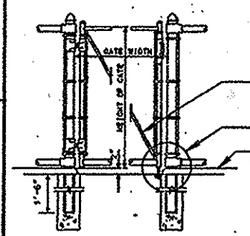

4'-0" WIDE

NOTES:

3'-6", 4'-0", & 6'-0" FENCE SINGLE GATES SIMILAR.

USE LOCKING DEVICE AT PERIMETER FENCES ONLY, OR AS DIRECTED BY ENGINEER.

8 12'-0" SINGLE FENCE GATE

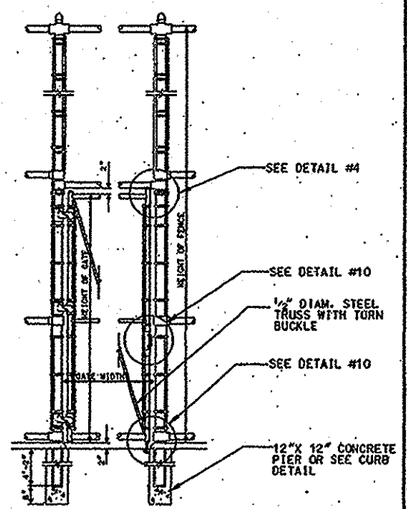

14 PRESSED STEEL HINGE

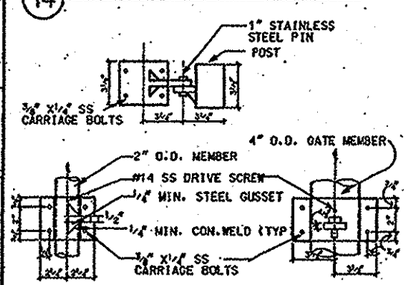

3 GATE POST SPLIT FITTING AND CAP

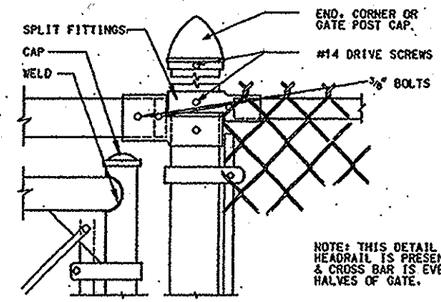

NOTE: THIS DETAIL USED WHEN HEADRAIL IS PRESENT ABOVE GATE & CROSS BAR IS EVEN WITH BOTH HALVES OF GATE.

9 MALLEABLE IRON HINGE

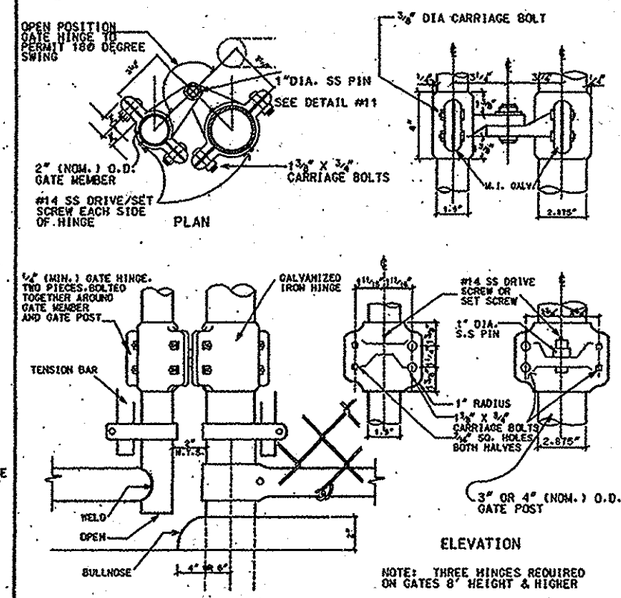

NOTE: THREE HINGES REQUIRED ON GATES 8' HEIGHT & HIGHER

10 GATE LOCK GATE STOP TYPE "B" - BOTTOM

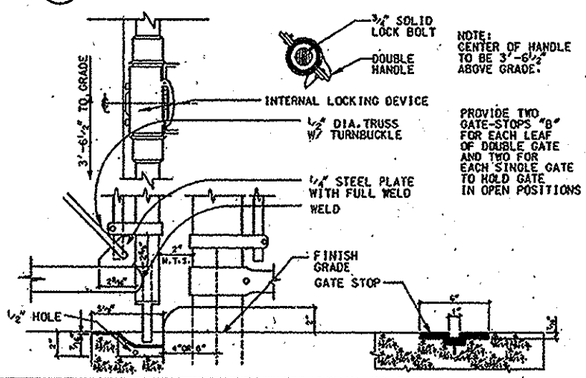

NOTE:
CENTER OF HANDLE TO BE 3'-6 1/2" ABOVE GRADE.

PROVIDE TWO GATE-STOPS "B" FOR EACH LEAF OF DOUBLE GATE AND TWO FOR EACH SINGLE GATE TO HOLD GATE IN OPEN POSITIONS

11 GATE PIN

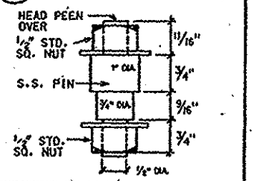

NOMINAL THICKNESS CHARTS

SS-40

NOMINAL O.D. SIZE	ACTUAL I.D. SIZE	ACTUAL O.D. SIZE	STEEL WT/LF
1 0/2"	1.549	1.660	1.84
2"	1.780	1.900	2.28
2 1/2"	2.245	2.375	3.12
3"	2.715	2.875	4.64
3 1/2"	3.340	3.500	5.71
4"	3.840	4.000	6.56

SCHEDULE 40 - ASTM A53

NOMINAL PIPE SIZE	ACTUAL I.D. SIZE	ACTUAL O.D. SIZE	STEEL WT/LF
1 1/4"	1.380	1.660	2.27
1 1/2"	1.610	1.900	2.72
2"	2.067	2.375	3.65
2 1/2"	2.469	2.875	5.79
3 "	3.068	3.500	7.58
3 1/2"	3.548	4.000	9.11

SCHEDULE OF MEMBER SIZES

PIPE POSTS & RAILS SHALL BE TYPE I OR TYPE II

TYPE I: ROUND MEMBERS SHALL BE HOT DIPPED GALVANIZED CONFORMING WITH ASTM-A-53 STANDARD WEIGHT SCHEDULE 40

TYPE II: ROUND MEMBERS SHALL BE MANUFACTURED FROM STEEL CONFORMING TO ASTM-A569 COLD ROLLED WELDED, HAVE A TENSILE STRENGTH OF 50,000 P.S.I. AND BE GIVEN CORROSION PROTECTION AS PER SPECIFICATIONS FOR SS-40 PIPE.

HEIGHT OF FENCE	DIAMETER OF LINE POSTS	POST SPACING MAXIMUM	GATE POST	HORIZ BRACE AT GATE POST	SIZE OF GATE MEMBERS	HORIZ BRACE ON GATES	SINGLE GATE HEIGHT	SINGLE GATE WIDTH	DIAG. TRUSS ON GATE	DIAG. TRUSS-FENCE PANELS	PORTAL	HEAD RAIL	DEPTH OF POST FOOTING
3'-6"	2"	6'-0"	3"	0	2"	0	3'-6"	4'-0"	1/2" DIAM.	0	NO	0	1'-6"
4'-0"	2"	6'-0"	3"	0	2"	0	4'-0"	4'-0"	1/2" DIAM.	0	NO	0	1'-6"
6'-0"	2"	6'-0"	3"	0	2"	0	6'-0"	4'-0"	1/2" DIAM.	1/2" DIAM.	NO	0	2'-0"
8'-0"	2 1/2"	8'-0"	3"	(1) - 1 5/8"	2"	1 5/8"	7'-7"	4'-0"	1/2" DIAM.	1/2" DIAM.	NO	0	2'-0"
10'-0"	3"	10'-0"	4"	(2) - 1 5/8"	2"	1 5/8"	7'-7"	4'-0"	1/2" DIAM.	1/2" DIAM.	YES	3"	3'-2"
12'-0"	3"	10'-0"	4"	(2) - 1 5/8"	2"	1 5/8"	7'-7"	4'-0"	1/2" DIAM.	1/2" DIAM.	YES	3"	4'-2"
16'-0"	3 1/2"	10'-0"	4"	(2) - 1 5/8"	2"	1 5/8"	7'-7"	4'-0"	1/2" DIAM.	1/2" DIAM.	YES	3"	4'-2"

REVISION NO.	DESCRIPTION	DATE	APPROVED

NEW YORK CITY DOT

New York City
Department of Transportation

CHAIN LINK FENCE - SINGLE GATE

Approved:
Chief Engineer
Department of Transportation

Approved:
Associate Commissioner
Infrastructure/Design
Department of Design + Construction

Date Issued: 7/1/10

Scale: None

Drawing # H-10: 1-3

CHECKED BY: MZ

HWS-H1021-3

1 3'-6" & 4'-0" FENCE

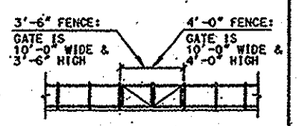

5 6'-0" FENCE

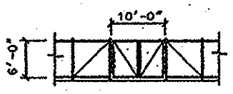

9 8'-0" FENCE

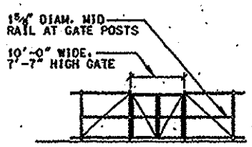

10 10'-0" FENCE

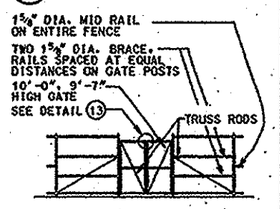

14 12'-0" FENCE

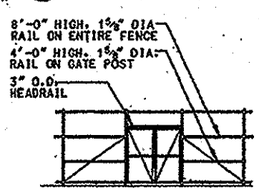

15 16'-0" FENCE

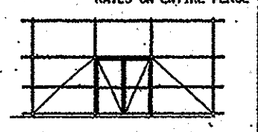

2 4'-0" DOUBLE GATE FENCE

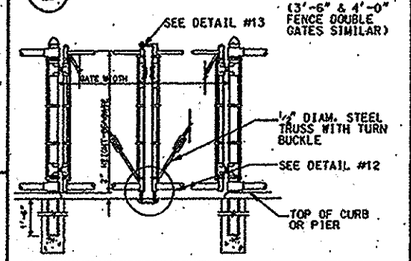

6 8'-0" DOUBLE GATE FENCE

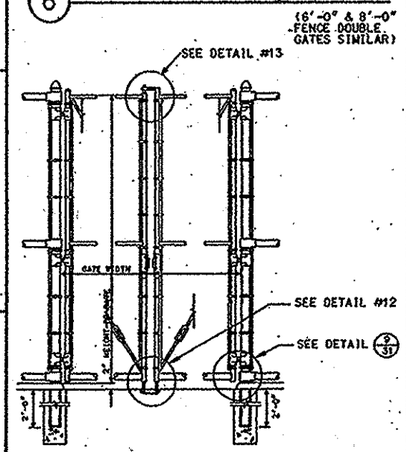

11 12'-0" DOUBLE GATE FENCE

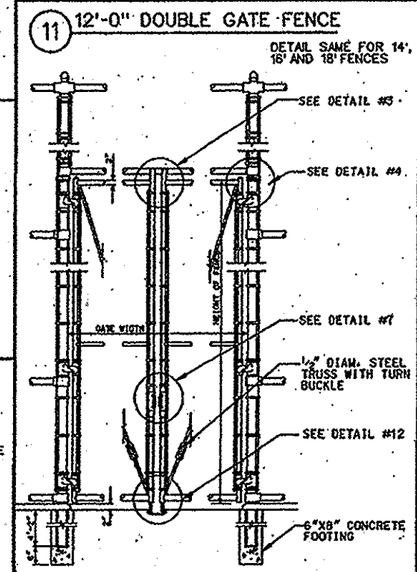

3 GATE STOP AND LOCK - DOUBLE GATE, TOP

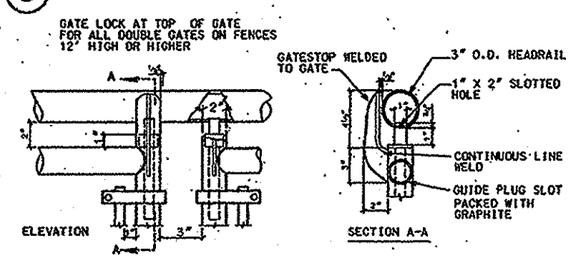

7 LOCK BOLT LIFT AND GATE HANDLE

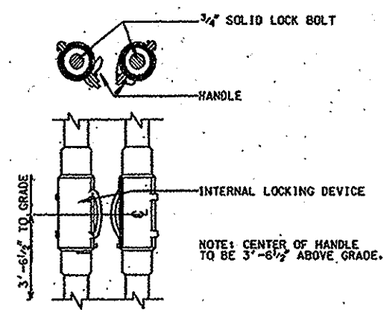

12 GATE STOP - DOUBLE GATE, BOTTOM

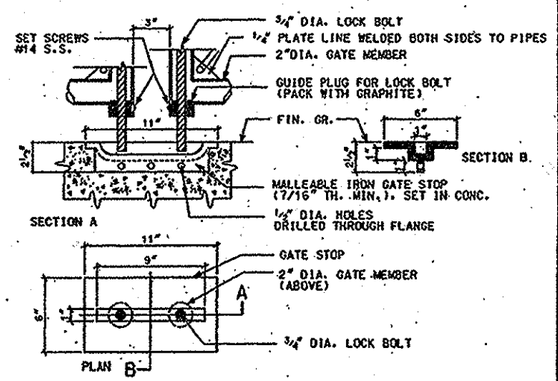

4 HEAD RAIL AND TENSIONING ELEMENTS

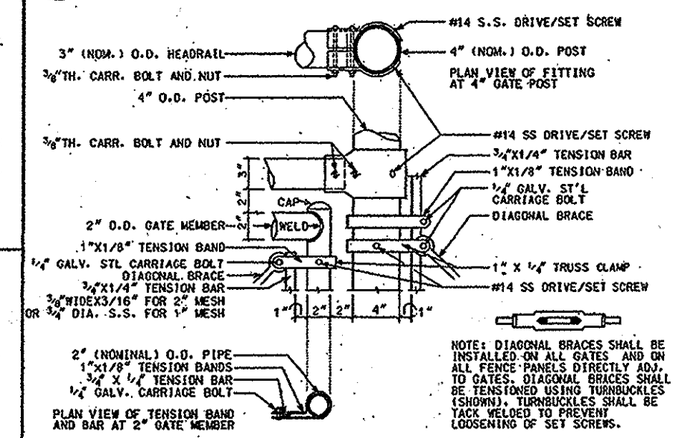

8 CONCRETE PAVEMENT - DOUBLE GATE

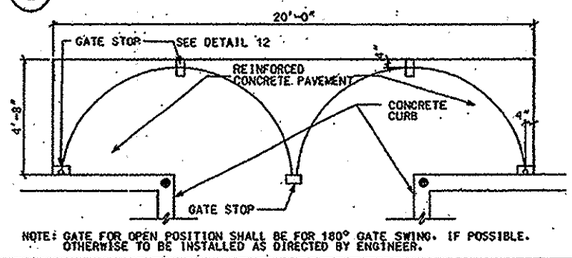

NOTE: GATE FOR OPEN POSITION SHALL BE FOR 180° GATE SWING. IF POSSIBLE. OTHERWISE TO BE INSTALLED AS DIRECTED BY ENGINEER.

13 GATE LOCK

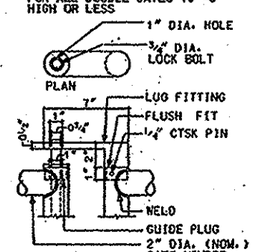

NOMINAL THICKNESS CHARTS

SS-40

NOMINAL O.D. SIZE	ACTUAL I.D. SIZE	ACTUAL O.D. SIZE	STEEL WT/LF
1 5/8"	1.549	1.660	1.84
2"	1.780	1.900	2.28
2 1/2"	2.245	2.375	3.12
3"	2.715	2.875	4.64
3 1/2"	3.340	3.500	5.71
4"	3.840	4.000	6.56

SCHEDULE 40

NOMINAL O.D. SIZE	ACTUAL I.D. SIZE	ACTUAL O.D. SIZE	STEEL WT/LF
1 5/8"	1.380	1.660	2.27
2"	1.610	1.900	2.71
2 1/2"	2.067	2.375	3.65
3"	2.469	2.875	5.79
3 1/2"	3.068	3.500	7.58
4"	3.543	4.000	9.10

SCHEDULES OF MEMBER SIZES & PIPES

HEIGHT OF FENCE	DIAMETER OF LINE POSTS	POST SPACING MAXIMUM	GATE POST	HORIZ BRACE AT GATE POST	SIZE OF GATE MEMBERS	HORIZ BRACE ON GATES	DOUBLE GATE HEIGHT	DOUBLE GATE WIDTH	DIAG. TRUSS ON GATE	DIAG. TRUSS-FENCE PANELS	PORTAL	HEAD RAIL	DEPTH OF POST FOOTING
3'-6"	2"	6'-0"	3"	0	2"	0	3'-6"	10'-0"	0	0	NO	0	1'-8"
4'-0"	2"	6'-0"	3"	0	2"	0	4'-0"	10'-0"	0	0	NO	0	1'-6"
6'-0"	2"	6'-0"	3"	0	2"	0	6'-0"	10'-0"	1/2" DIAM.	1/2" DIAM.	NO	0	2'-0"
8'-0"	2 1/2"	8'-0"	3"	(1) -1 5/8"	2"	1 5/8"	7'-7"	10'-0"	1/2" DIAM.	1/2" DIAM.	NO	0	2'-0"
10'-0"	3"	10'-0"	4"	(2) -1 5/8"	2"	1 5/8"	9'-7"	10'-0"	1/2" DIAM.	1/2" DIAM.	NO	0	3'-2"
12'-0"	3"	10'-0"	4"	(2) -1 5/8"	2"	1 5/8"	9'-7"	10'-0"	1/2" DIAM.	1/2" DIAM.	YES	3"	4'-2"
14'-0" THRU 20'-0"	3 1/2"	10'-0"	4"	(2) -1 5/8"	2"	1 5/8"	9'-7"	10'-0"	1/2" DIAM.	1/2" DIAM.	YES	3"	4'-2"

REVISION NO.	DESCRIPTION	DATE	APPROVED

NEW YORK CITY DOT

New York City
Department of Transportation

CHAIN LINK FENCE - DOUBLE GATE

Approved:
Chief Engineer
Department of Transportation

Approved:
Associate Commissioner
Infrastructure/Design
Department of Design + Construction

Date Issued: 2/1/10

Scale: None

Drawing # H-10 21-4

CHECKED BY: MZ

HWS-H1021-4

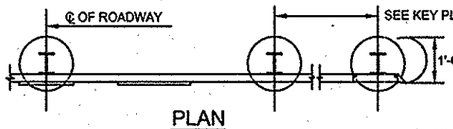

PLAN

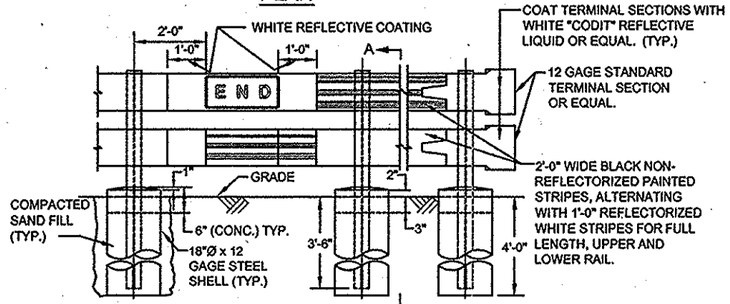

ELEVATION

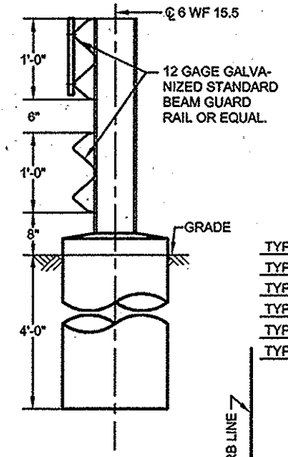

SECTION A-A

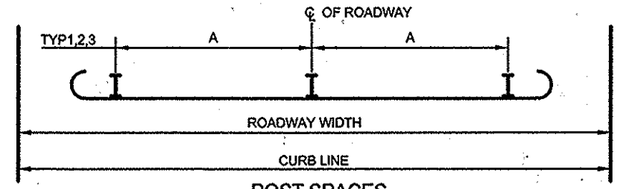

POST SPACES

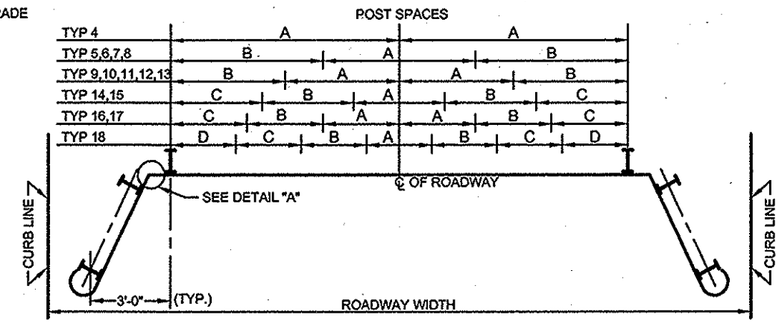

KEY PLAN
NOT TO SCALE

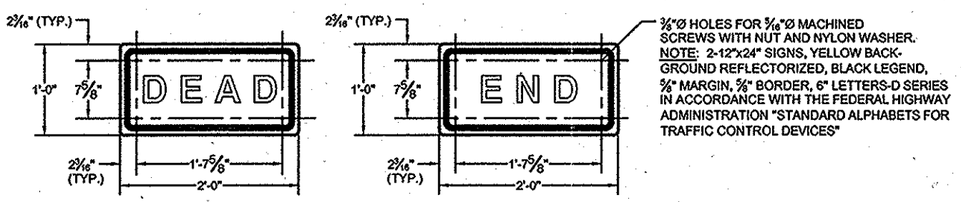

N.T.S.

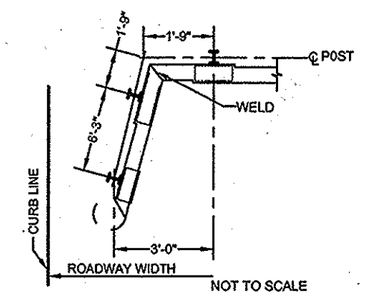

NOT TO SCALE

DETAIL "A"

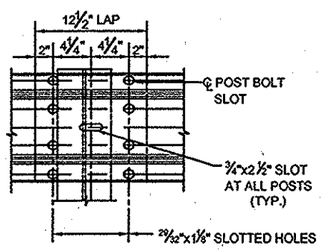

ELEVATION OF GUARD RAIL SPLICE AT POST
N.T.S.

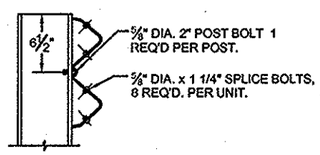

CROSS SECTION THROUGH GUARD RAIL SPLICE
N.T.S.

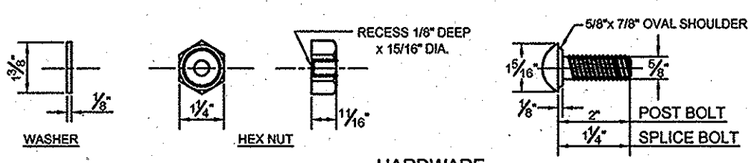

HARDWARE
N.T.S.

NOTES

1. ALL MATERIALS SHALL COMPLY WITH AASHTO DES. M180.
2. DEAD-END SIGN (2) 12"x24" RECTANGLES 0.08 ALUMINUM AS NOTED AND DETAILED, #2271 YELLOW "SCOTCHLITE" SCREENED #705 BLACK OR PROVED EQUIVALENT.
3. THE VERTICAL WHITE STRIPES ON THE BEAM BARRIER SHALL BE REFLECTORIZED WITH #7216 "CODIT" REFLECTIVE LIQUID AS MADE BY MINN. MINING AND MANUFACTURING COMPANY OR APPROVED EQUIVALENT.
4. POSTS SHALL CONFORM TO ASTM A36 WITH 0.2% COPPER AND SHALL BE GALVANIZED PER ASTM 123.
5. NUTS AND BOLTS SHALL CONFORM TO ASTM A307 AND SHALL BE GALVANIZED PER ASTM 123.
6. BEAMS AND TERMINAL SECTIONS SHALL BE MADE FROM 12 GAGE OR HEAVIER SHEET ROLLED FROM NEW BILLET, OPEN HEARTH OR ELECT. FURNACE STEEL. THE ULTIMATE TENSILE STRENGTH OF A SPECIMEN OF THE FULL SIZE OF THE BEAM, INCLUDING A SPLICE AT THE CENTER OF THE SPECIMEN SHALL BE AT LEAST 80,000 P.S.I. THE MIN. ELONGATION OF A SPECIMEN SHALL BE 12% IN A 2" GAGE LENGTH.
7. GALVANIZING PRIMER AND PAINT FOR BLACK STRIPES SHALL BE AS APPROVED BY THE ENGINEER.

BARRIER SCHEDULE

TYPE	ROAD-WAY WIDTH	POST SPACES						
		D	C	B	A	B	C	D
1	20'-0"	-	-	-	8'-0"	-	-	-
2	25'-0"	-	-	-	10'-6"	-	-	-
3	30'-0"	-	-	-	12'-6"	-	-	-
4	34'-0"	-	-	-	12'-6"	-	-	-
5	38'-0"	-	-	9'-4"	9'-4"	9'-4"	-	-
6	40'-0"	-	-	12'-6"	6'-3"	12'-6"	-	-
7	44'-0"	-	-	12'-6"	9'-0"	12'-6"	-	-
8	46'-0"	-	-	12'-6"	11'-0"	12'-6"	-	-
9	50'-0"	-	-	12'-6"	7'-6"	12'-6"	-	-
10	52'-0"	-	-	12'-6"	8'-6"	12'-6"	-	-
11	54'-0"	-	-	12'-6"	9'-6"	12'-6"	-	-
12	60'-0"	-	-	12'-6"	12'-6"	12'-6"	-	-
13	62'-0"	-	-	12'-6"	12'-6"	12'-6"	-	-
14	68'-0"	-	12'-6"	12'-6"	8'-0"	12'-6"	12'-6"	-
15	70'-0"	-	12'-6"	12'-6"	10'-0"	12'-6"	12'-6"	-
16	76'-0"	-	12'-6"	12'-6"	8'-0"	12'-6"	12'-6"	-
17	80'-0"	-	12'-6"	12'-6"	10'-0"	12'-6"	12'-6"	-
18	90'-0"	12'-6"	12'-6"	10'-0"	10'-0"	10'-6"	12'-6"	12'-6

REVISION NO.	DESCRIPTION	DATE	APPROVED

NEW YORK CITY DOT

New York City
Department of Transportation

BEAM BARRIER FOR
DEAD END STREETS

Approved:
Chief Engineer
Department of Transportation

Approved:
Associate Commissioner
Infrastructure/Design
Department of Design + Construction

Date Issued: 7/1/10

Scale: None

Drawing # H-10 2

CHECKED BY: MR

HWS-H1022

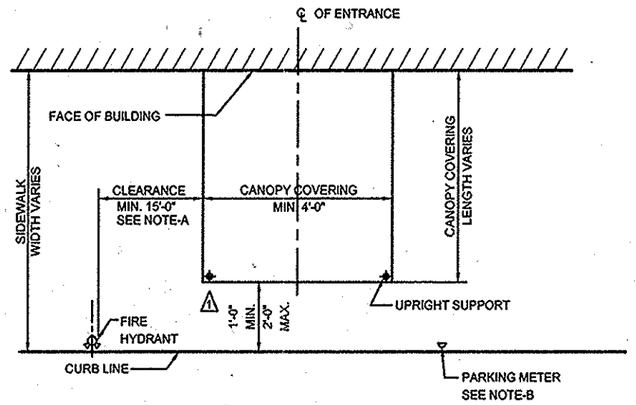

PLAN VIEW

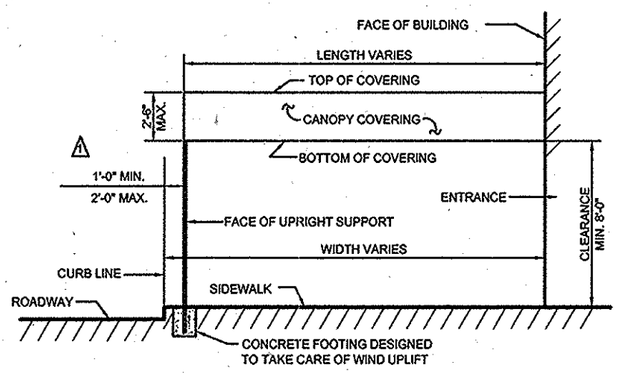

SIDE VIEW

NOTE-A

PRIOR APPROVAL MUST BE OBTAINED FROM THE FIRE DEPARTMENT FOR DISTANCE LESS THAN 15'-0".

NOTE-B

PRIOR APPROVAL MUST BE OBTAINED FROM THE BUREAU OF TRAFFIC OPERATIONS WHERE EXISTING PARKING METERS ARE LOCATIONED WITHIN THE PROPOSED CANOPY AREA.

A PERMIT MUST BE OBTAINED FROM THE NYC DEPARTMENT OF TRANSPORTATION BEFORE ANY CANOPY IS ERECTED.

DESIGN SPECIFICATIONS

SIZE LIMITATIONS

WIDTH — THE WIDTH OF THE CANOPY IS LIMITED TO THE WIDTH OF THE ENTRANCE TO THE BUILDING OR PLACE OF BUSINESS, BUT IN NO CASE MAY THE WIDTH BE LESS THAN THAN FOUR FEET.

HEIGHT — THE BOTTOM OF THE COVERING OF THE CANOPY SHALL BE NOT LESS THAN EIGHT FEET ABOVE THE SIDEWALK.

LENGTH — THE CANOPY MAY EXTEND FROM THE BUILDING TO NO MORE THAN A MIN. OF ONE FOOT OR A MAX. OF 2 FEET FROM CURB LINE.

COVERING MATERIAL — MAY BE OF FLAMEPROOF CANVAS OR CLOTH, APPROVED SLOW BURNING PLASTIC, SHEET METAL OR OTHER EQUIVALENT MATERIAL.

COLOR — MUST HARMONIZE WITH THE ARCHITECTURE OF THE BUILDING THAT IT IS INTENDED FOR AND ALSO BE IN KEEPING WITH THE SURROUNDING AREA.

PAINTING — WHERE FRAMEWORK IS IRON, STEEL OR GALVANIZED, IT SHALL BE PAINTED AT A MAXIMUM OF FIVE YEAR PERIODS THEREAFTER.

LETTERING — LETTERING ON COVERING MAY BE OF A PAINTED, IMPRINTED OR STENCILED TYPE AS APPROVED AND SHALL BE LIMITED TO A SINGLE HORIZONTAL LINE OF LETTERING ON EACH SIDE FACE OF THE CANOPY COVERING. THE SUM OF THE AREAS OF THE PERMITTED CANOPY LETTERING AND THE SIGNS ON THE BUILDING WITH WHICH THE CANOPY IS CONNECTED SHALL NOT EXCEED THE SIGN LIMITS ESTABLISHED IN THE ZONING RESOLUTION OF THE CITY OF NEW YORK.

SIDE CURTAINS — NO SIDE CURTAINS ARE PERMITTED.

SUPPORT AND FRAMEWORK MATERIAL — SUPPORTING FRAMEWORK SHALL BE CONSTRUCTED OF NON-COMBUSTIBLE METAL MEMBERS VERTICAL UPRIGHTS SHALL BE OF SUFFICIENT SIZE AND STRENGTH AND SHALL BE NO LESS THAN A STANDARD STEEL PIPE 1 1/4 INCH DIAMETER. WHERE SPECIAL CONSTRUCTION IS USED INSTEAD OF PIPE, THE DESIGN SHALL BE EQUIVALENT TO THE ABOVE NOTED MINIMUM STANDARD FOR PIPE.

CONSTRUCTION — THE VERTICAL UPRIGHTS SHALL BE IMBEDDED IN A CONCRETE FOOTING OF ADEQUATE SIZE DESIGNED TO TAKE CARE OF WIND UPLIFT. INTERMEDIATE SUPPORTS OR DIAGONAL BRACING FOR VERTICAL SUPPORTS ARE NOT PERMITTED. EXCEPT FOR ADDITIONAL UPRIGHT SUPPORTS AT THE FACE OF THE BUILDING.

REPAINTING — WHERE INITIALLY PAINTED, IT SHALL BE REPAINTED AT A MAXIMUM OF FIVE YEAR INTERVALS.

LIGHTING — AREA UNDER CANOPY COVERING SHALL BE LIGHTED TO THE SATISFACTION OF THE NYC DEPARTMENT OF TRANSPORTATION (NYCDOT), WHERE DEEMED NECESSARY BY THE NYCDOT. IF CANOPY IS WITHIN TWENTY FEET OF A LAMP POST, LIGHTING SHALL BE PROVIDED UNDER THE CANOPY TO A MINIMUM OF 30 FOOT CANDLES. LIGHTING INSTALLATION MUST BE MADE BY A LICENSED ELECTRICIAN AND APPROVED BY THE NYCDOT DIVISION OF TRAFFIC OPERATIONS, STREET LIGHTING SECTION.

REVISION NO.	DESCRIPTION	DATE	APPROVED

NEW YORK CITY DOT

New York City
Department of Transportation

CRITERIA FOR DESIGN & CONSTRUCTION OF CANOPIES

Approved:
Chief Engineer
Department of Transportation

Approved:
Associate Commissioner
Infrastructure/Design
Department of Design + Construction

Date Issued: 7/1/10

Scale: None

Drawing # H-10 9

CHECKED BY: MT

HWS-H1029

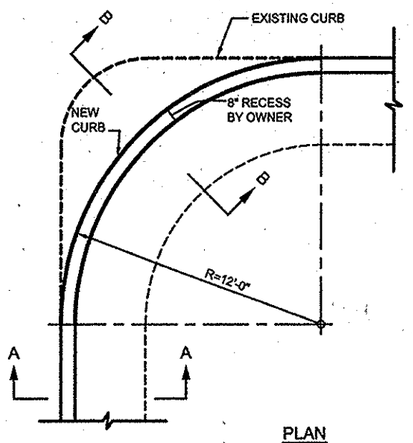

PLAN

STANDARD RECESS REQUIRED IN VAULT CONSTRUCTION WHERE CORNER CURB IS TO BE TURNED AT A 12'-0" RADIUS.

EXISTING RECEIVING BASIN TO BE REMODELED IN ACCORDANCE WITH STANDARD DRAWINGS ON FILE IN THE DEPT. OF ENVIRONMENTAL PROTECTION

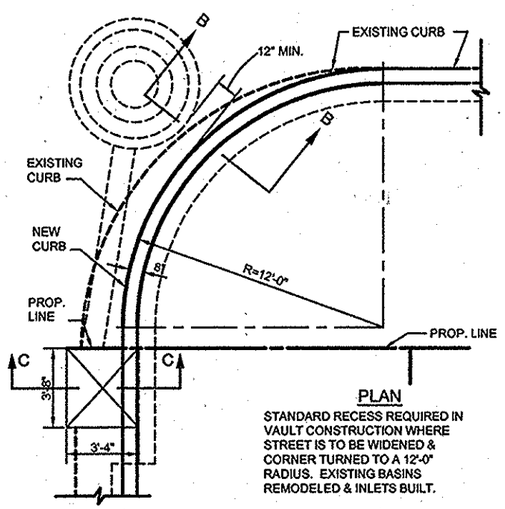

PLAN

STANDARD RECESS REQUIRED IN VAULT CONSTRUCTION WHERE STREET IS TO BE WIDENED & CORNER TURNED TO A 12'-0" RADIUS. EXISTING BASINS REMODELED & INLETS BUILT.

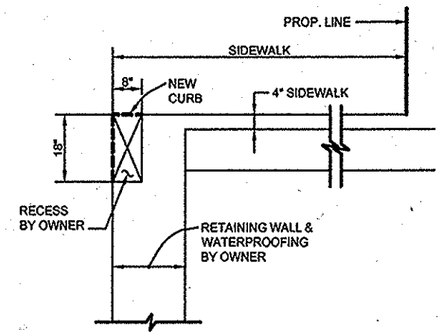

SECTION A-A

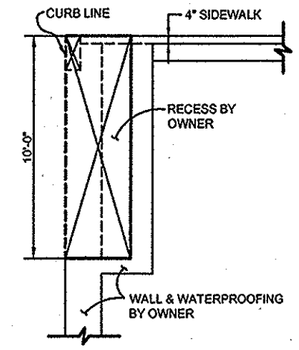

SECTION D-D

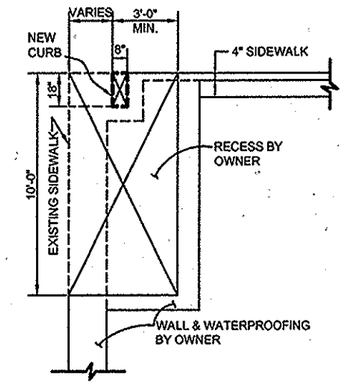

SECTION E-E

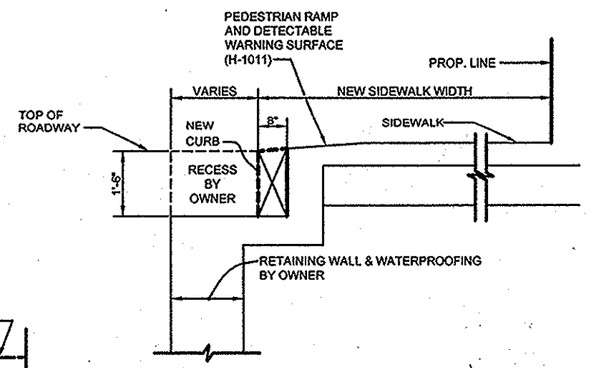

SECTION B-B

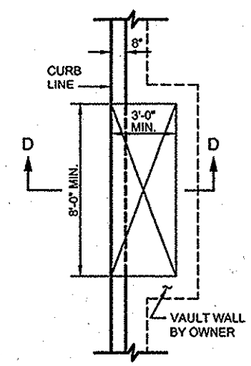

PLAN

(WHERE ROADWAY IS NOT WIDENED)

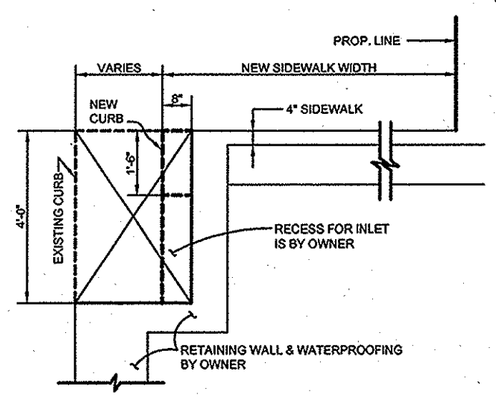

SECTION C-C

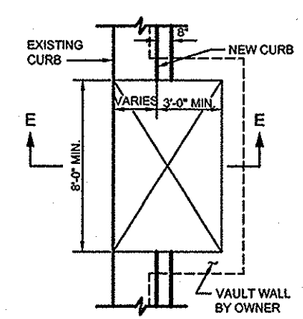

PLAN

(WHERE ROADWAY IS WIDENED)

NOTES:

1. DESIGN VAULT ROOF TO CONFORM TO REQUIREMENTS OF THE DEPARTMENT OF BUILDINGS.
2. CURB & SIDEWALK SHALL BE SET TO LINE AND GRADE AS DETERMINED BY THE NYC DEPARTMENT OF TRANSPORTATION (NYCDOT).
3. RECESS FOR CURB, TO BE NOT LESS THAN 1'-6" BELOW GRADE, TO BE FURNISHED BY THE CITY.
4. CURB SHALL CONFORM TO THE STANDARD SPECIFICATION ON FILE IN THE NYC DEPARTMENT OF TRANSPORTATION.
5. SIDEWALK AREA BETWEEN EXISTING AND PROPOSED CURB LINES TO BE MAINTAINED FOR PEDESTRIAN TRAFFIC PENDING WIDENING OF THE ROADWAY.
6. PERMIT FROM THE NYC DEPARTMENT OF TRANSPORTATION AND DEPARTMENT OF BUILDINGS MUST BE OBTAINED BEFORE ANY WORK IS PERFORMED WITHIN THE AREA.

REVISION NO.	DESCRIPTION	DATE	APPROVED

NEW YORK CITY DOT

New York City
Department of Transportation

STANDARD RECESS IN VAULT CONSTRUCTION TO PROVIDE FOR STREET WIDENING, RECEIVING BASINS, INLETS, AND 12'-0" CORNER RADIUS

Approved:
Chief Engineer
Department of Transportation

Approved:
Associate Commissioner
Infrastructure/Design
Department of Design + Construction

Date Issued: 7/1/10

Scale: None

Drawing # H-1030

CHECKED BY: MT.

DWS-H1030

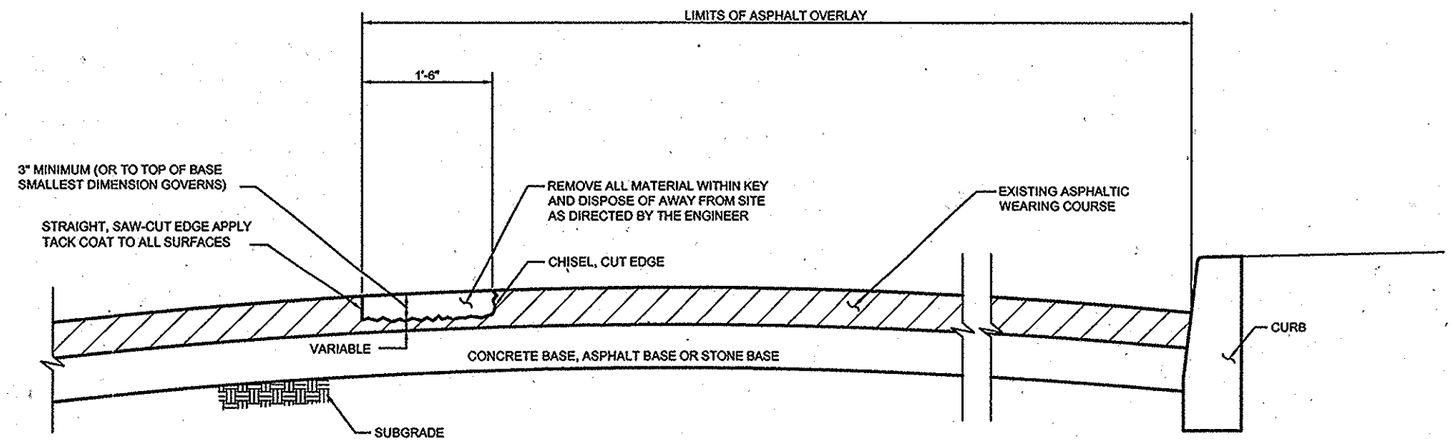

TYPICAL PAVEMENT KEY
N.T.S.

REVISION NO.	DESCRIPTION	DATE	APPROVED

NEW YORK CITY DOT

New York City
Department of Transportation

TYPICAL PAVEMENT KEY

Approved:
Chief Engineer
Department of Transportation

Approved:
Associate Commissioner
Infrastructure/Design
Department of Design + Construction

Date Issued: 7/1/10

Scale: None

Drawing # H103 I

CHECKED BY: MT

HWS-H1031

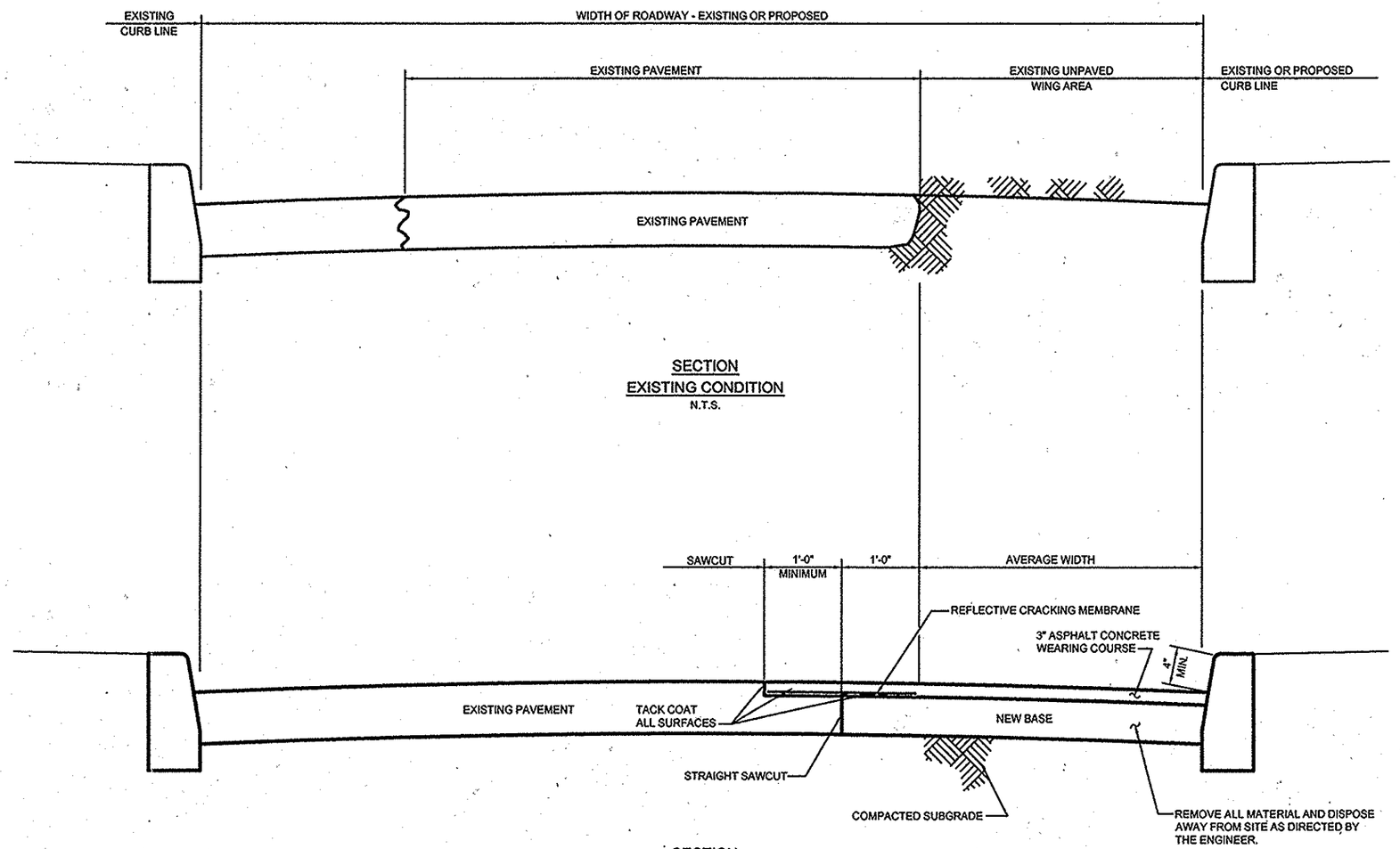

SECTION
TYPICAL NEW PAVEMENT IN UNPAVED WING AREA
N.T.S.

REVISION NO.	DESCRIPTION	DATE	APPROVED

NEW YORK CITY DOT

New York City
Department of Transportation

TYPICAL NEW PAVEMENT IN UNPAVED WING AREA

Approved:
Chief Engineer
Department of Transportation

Approved:
Associate Commissioner
Infrastructure/Design
Department of Design + Construction

Date Issued: 7/1/10

Scale: None

Drawing # H-10 12

CHECKED BY: MZ

HWS-H1032

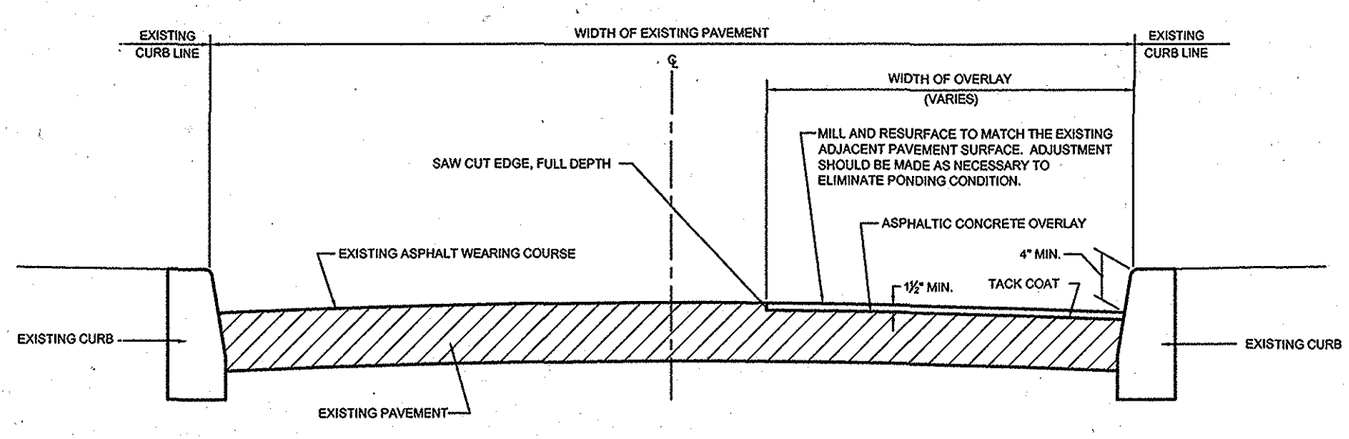

SECTION
N.T.S.

NOTE:
ADJUST ALL MANHOLES, GRATES, CATCH BASINS, VAULTS, BOXES, ETC. WITHIN AREA OF RESURFACING.

CHECKED BY: MT

HWS-H1033

REVISION NO.	DESCRIPTION	DATE	APPROVED

NEW YORK CITY DOT

New York City
Department of Transportation

TYPICAL RESURFACING ON ASPHALT PAVEMENT &/OR WEARING COURSE (LESS THAN FULL WIDTH)

Approved:
Chief Engineer
Department of Transportation

Approved:
Associate Commissioner
Infrastructure/Design
Department of Design + Construction

Date Issued: 7/1/10

Scale: None

Drawing # H-1013

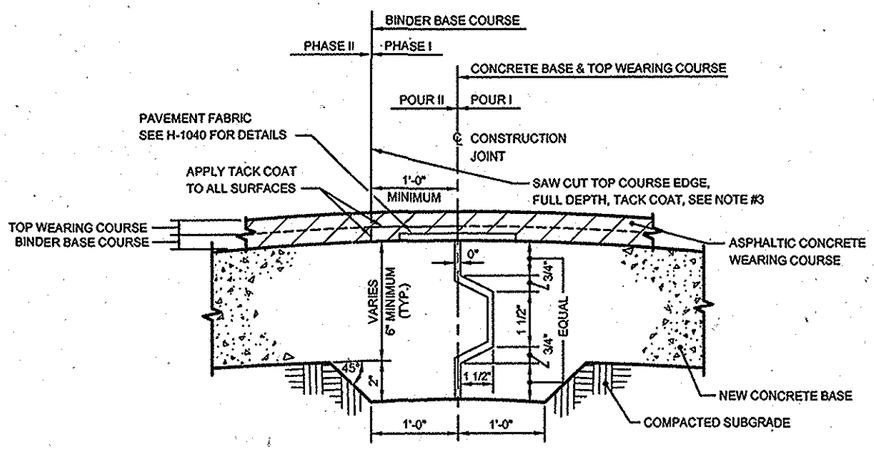

SECTION
TYPE I CONSTRUCTION JOINT
N.T.S.

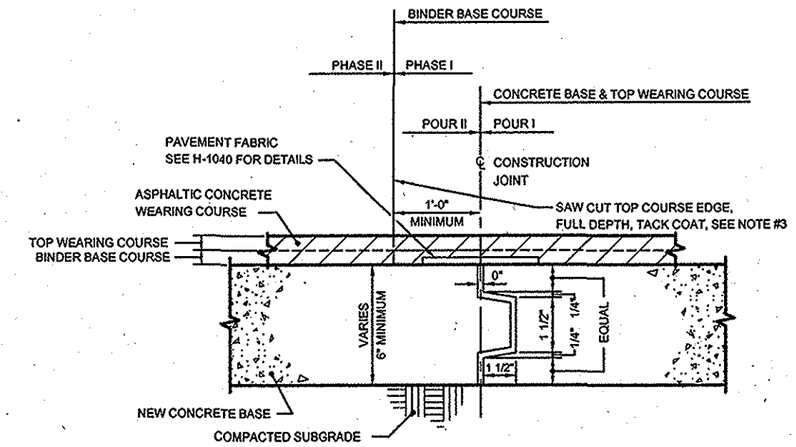

SECTION
TYPE II CONSTRUCTION JOINT
N.T.S.

NOTES:

1. TYPE I CONSTRUCTION JOINT TO BE USED FOR LONGITUDINAL ROADWAY JOINTS.
2. TYPE II CONSTRUCTION JOINT SHALL BE INSTALLED ON ALL TRANSVERSE ROADWAY JOINTS.
3. ALL ASPHALT JOINTS SHALL BE SAW-CUT, FULL DEPTH. TACK COAT TO BE APPLIED TO ALL SURFACES. JOINT SHALL BE PARALLEL TO CURBLINE OR AS OTHERWISE DIRECTED.

CHECKED BY: MZ

DWS-H1034

REVISION NO.	DESCRIPTION	DATE	APPROVED

NEW YORK CITY DOT

New York City
Department of Transportation

TYPICAL CONSTRUCTION JOINTS
FOR
CONCRETE BASE FOR PAVEMENT

Approved:
Chief Engineer
Department of Transportation

Approved:
Associate Commissioner
Infrastructure/Design
Department of Design + Construction

Date Issued: 7/1/10

Scale: None

Drawing # H-1034

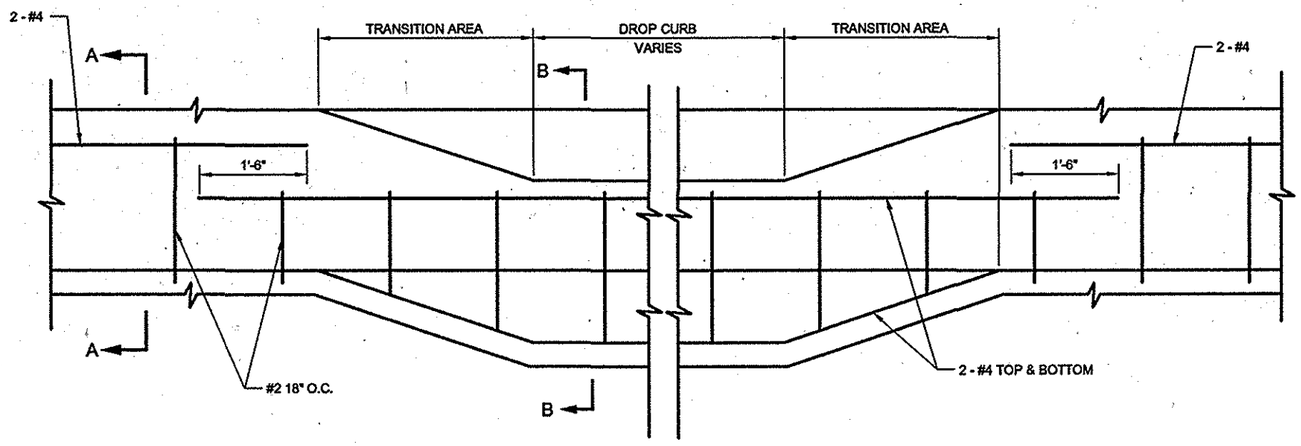

CURB ELEVATION VIEW

NOT TO SCALE

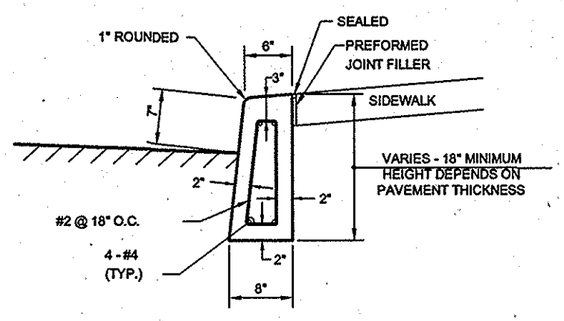

SECTION A-A

NOT TO SCALE

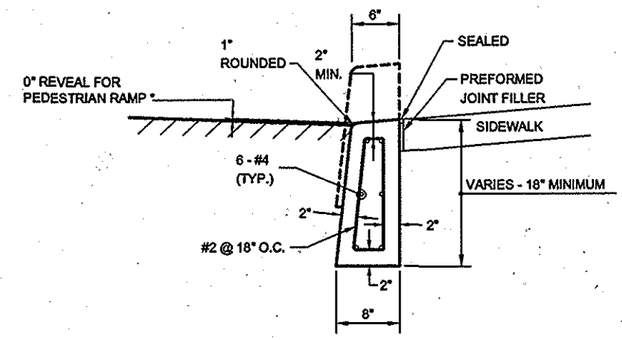

SECTION B-B

NOT TO SCALE

* REVEAL AT PEDESTRIAN RAMPS
SHALL BE 0" AS SHOWN.
REVEAL AT DRIVEWAY TO BE 1-1/2".

NOTES:

1. CONCRETE SHALL BE CLASS A-40, 4000 P.S.I. AS PER SECTION 3.05 OF STANDARD HIGHWAY SPECIFICATIONS.
2. STEEL REINFORCEMENT SHALL BE AS PER ASTM A615, GRADE 60.
3. THE SLOPE OF THE TOP OF CURB SHALL CONFORM TO SLOPE OF SIDEWALK IN ALL CASES.
4. EXPANSION JOINTS IN CURB SHALL NOT EXCEED 20'-0" O.C.
5. THE EXPANSION JOINTS OF THE CURB SHOULD LINE UP WITH THE EXPANSION JOINTS IN THE CONCRETE SIDEWALK.

REVISION NO.	DESCRIPTION	DATE	APPROVED

NEW YORK CITY DOT

New York City
Department of Transportation

REINFORCED CONCRETE CURB &
DROP CURB

Approved:
Chief Engineer
Department of Transportation

Approved:
Associate Commissioner
Infrastructure/Design
Department of Design + Construction

Date Issued: 7/1/10

Scale: None

Drawing # H-1035

CHECKED BY: MB

HWS-H1035

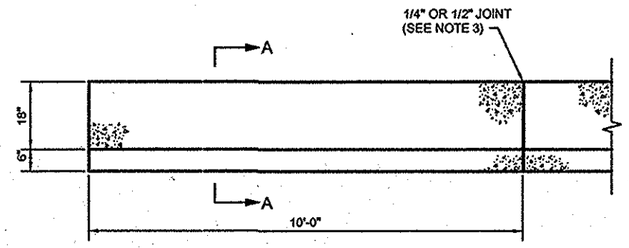

ELEVATION
N.T.S.

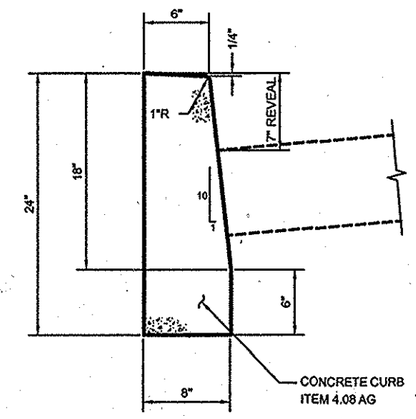

SECTION A-A
N.T.S.

NOTES:

1. ALL EXPOSED SURFACES TO BE STEEL - TROWEL FINISHED.
2. THE MATERIAL UNDERLYING THE CURB SHALL BE SATISFACTORY AND THOROUGHLY COMPACTED TO THE SATISFACTION OF THE ENGINEER.
3. PREFORMED JOINT FILLER TO BE USED AT ALL EXPANSION JOINTS. THICKNESS OF EXPANSION JOINT TO MATCH THAT OF ADJACENT SIDEWALK.
4. COLOR TO BE AS DIRECTED.

CHECKED BY: MZ

NWS-H1036

REVISION NO.	DESCRIPTION	DATE	APPROVED

NEW YORK CITY DOT

New York City
Department of Transportation

CONCRETE POURED-IN-PLACE
MALL CURB

Approved:
Chief Engineer
Department of Transportation

Approved:
Associate Commissioner
Infrastructure/Design
Department of Design + Construction

Date Issued: 7/1/10

Scale: None

Drawing # H-1036

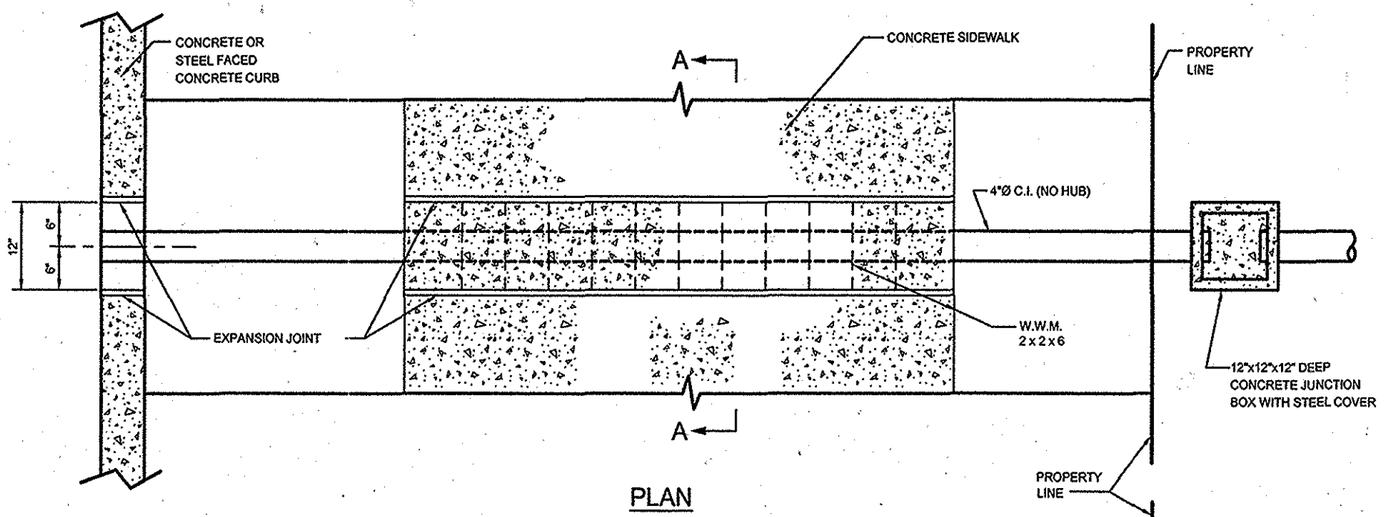

PLAN

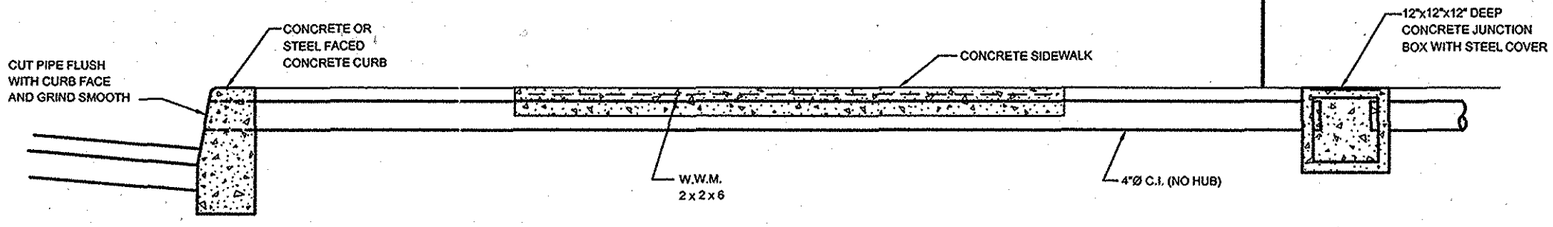

CROSS SECTION

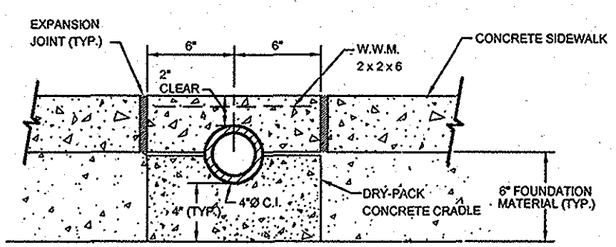

SINGLE DRAIN (AS SHOWN)

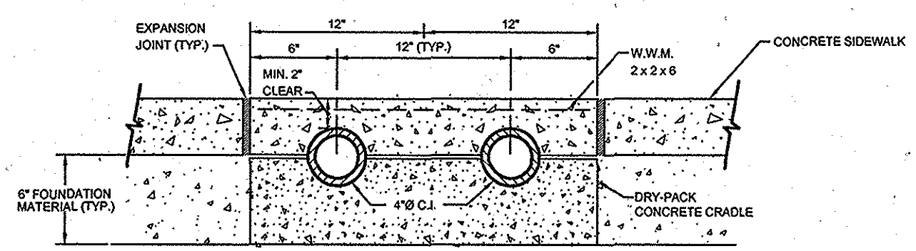

MULTIPLE DRAIN

SECTION A-A
N.T.S.

NOTE:
AUTHORIZATION REQUIRED BY N.Y.C. DEPT. OF BUILDINGS & DEPT. OF ENVIRONMENTAL PROTECTION FOR NEW INSTALLATIONS.

REVISION NO.	DESCRIPTION	DATE	APPROVED

NEW YORK CITY DOT

New York City
Department of Transportation

UNDER SIDEWALK DRAIN

Approved:
Chief Engineer
Department of Transportation

Approved:
Associate Commissioner
Infrastructure/Design
Department of Design + Construction

Date Issued: 7/1/10

Scale: None

Drawing # H-1037

CHECKED BY: MJS

DWS-H1037

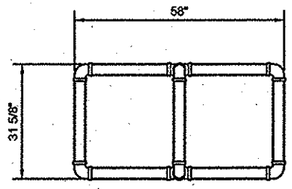

PLAN

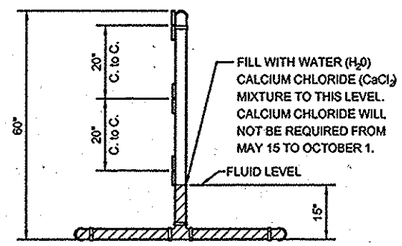

SIDE

TYPICAL TYPE III BREAKAWAY BARRICADE UNIT
ALTERNATE "A"
NOT TO SCALE

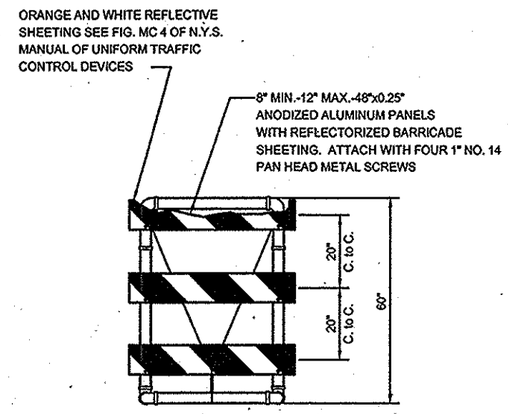

FRONT

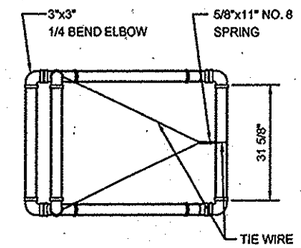

PLAN

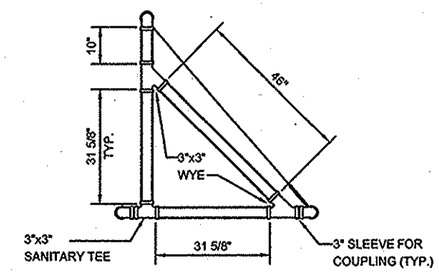

SIDE

TYPICAL TYPE III BREAKAWAY BARRICADE UNIT
ALTERNATE "B"
NOT TO SCALE

NOTES:

1. ALL PIPE SHALL BE POLYVINYL CHLORIDE (PVC) PRESSURE RATED PIPE SDR 21 OR SDR 26 ASTM D2241.
2. JOINT FITTINGS SHALL BE PVC ASTM D2665.
3. ALL PIPE SHALL BE WHITE. WHITE FITTINGS ARE PREFERRED, BLACK MAY BE USED.
4. SOLVENT CEMENT ASTM D2564 TYPE I.
5. ALUMINUM FACE PANELS N.Y.S.D.O.T. 730-01.
6. REFLECTIVE SHEETING N.Y.S.D.O.T. 730.05-01 OR 730.05-02.
7. PAN HEAD METAL SCREWS N.Y.S.D.O.T. 715.04.
8. ALL JOINTS TO BE GLUED.

NOTES:

1. ALL PIPE SHALL BE POLYVINYL CHLORIDE (PVC) PRESSURE RATED PIPE SDR 21 OR SDR 26 ASTM D2241.
2. JOINT FITTINGS MAY BE PVC ASTM D2665 OR ACRYLONITRILE BUTADIENE STYRENE (ABS)ASTM D2661 (DRAINAGE AND VENT).
3. ALL PIPE SHALL BE WHITE. WHITE FITTINGS ARE PREFERRED, BLACK MAY BE USED.
4. ALL JOINTS SHALL BE FREE TO SEPARATE UPON VEHICLE IMPACT.
5. SHADED CONDUIT TO BE TIED TOGETHER WITH ROPE THREADED INTO PIPE INTERIOR. USE 3/16" NO. 6 SOLID BRAIDED NYLON OR EQUIVALENT.
6. A FIXED FRANGIBLE PAVEMENT CONNECTION IS PREFERRED. SAND BAGS MAY BE SUBSTITUTED.
7. TIE WIRE 8 GAGE ALUMINUM OR GALVANIZED STEEL.
8. ALUMINUM FACE PANELS N.Y.S.D.O.T. 730-01.
9. REFLECTIVE SHEETING N.Y.S.D.O.T. 730.05-01 OR 730.05-02.
10. NO. 14 PAN HEAD METAL SCREWS 1" LONG N.Y.S.D.O.T. 715.04.
11. FOR LIGHTED BARRICADES THE MOUNTING OF BATTERY PACKS FOR LIGHTING ON CONSTRUCTION BARRICADES SHALL BE AT THE BASE OF THE BARRICADES.

REVISION NO.	DESCRIPTION	DATE	APPROVED

NEW YORK CITY DOT

New York City
Department of Transportation

TYPE III
BREAKAWAY BARRICADE

Approved:
Chief Engineer
Department of Transportation

Approved:
Associate Commissioner
Infrastructure/Design
Department of Design + Construction

Date Issued: 7/1/10

Scale: None

Drawing # H-1038

CHECKED BY: MZ

HWS-H1038

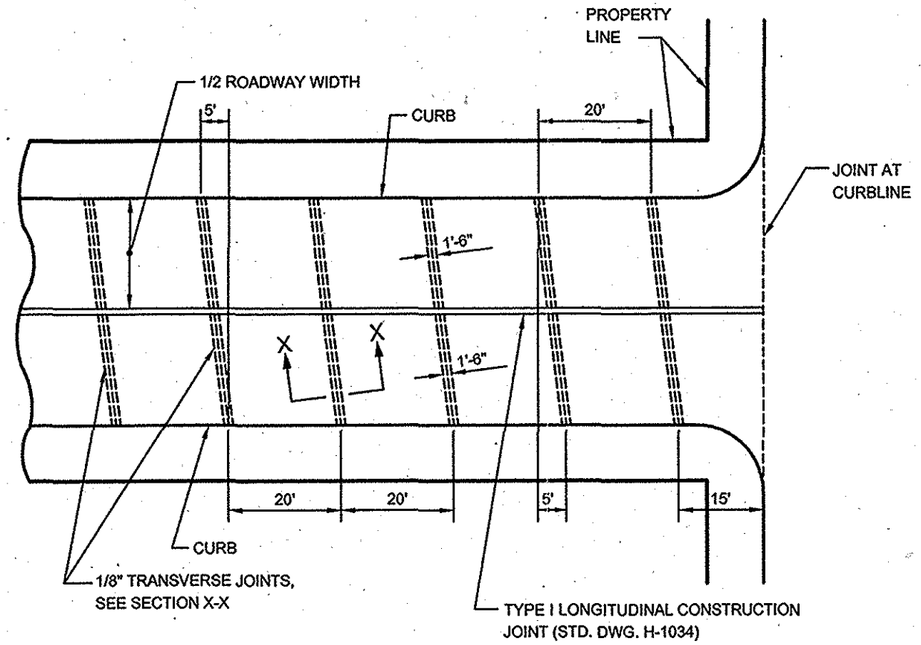

PLAN
(TYPICAL PAVEMENT JOINT LAYOUT)
N.T.S.

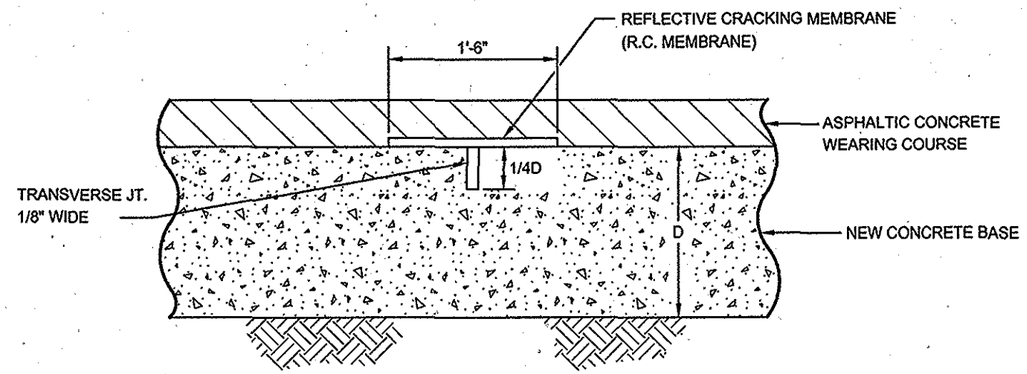

SECTION X-X
TYPICAL TRANSVERSE JOINT
N.T.S.

NOTES:

1. TYPE I CONSTRUCTION JOINTS TO BE INSTALLED ON ALL LONGITUDINAL ROADWAY JOINTS.
2. TRANSVERSE JOINTS TO BE SAW CUT WITHIN 24 HOURS OF POURING OF CONCRETE. TRANSVERSE JOINTS SHALL BE 5 FT. SKEWED AND SHALL BE PROVIDED AT 20 FT. CENTERS. SEE TYPICAL LAYOUT AND SECTION X-X FOR DETAILS. (1/8" WIDE)
3. AN 18 INCH WIDTH OF R.C. MEMBRANE IS TO BE APPLIED OVER TRANSVERSE AND LONGITUDINAL JOINTS TO PREVENT REFLECTIVE CRACKING. R.C. MEMBRANE TO BE APPROVED BY THE ENGINEER.
4. R.C. MEMBRANE TO BE INSTALLED AS PER MANUFACTURER'S SPECIFICATIONS.
5. ROADWAY JOINTS (LONGITUDINAL OR TRANSVERSE) TO BE PAID FOR UNDER NEW CONC. BASE ITEM.
6. CONTRACTOR WILL BE PERMITTED TO INSTALL ALTERNATE COLD JOINT FOR TRANSVERSE SECTIONS, SUBJECT TO THE APPROVAL OF THE FIELD ENGINEER.
7. R.C. MEMBRANE WILL BE PAID FOR UNDER ITEM 6.91, REFLECTIVE CRACKING MEMBRANE (18" WIDE).

REVISION NO.	DESCRIPTION	DATE	APPROVED

NEW YORK CITY DOT

New York City
Department of Transportation

TRANSVERSE CONSTRUCTION JOINTS
FOR CONCRETE BASE

Approved:
Chief Engineer
Department of Transportation

Approved:
Associate Commissioner
Infrastructure/Design
Department of Design + Construction

Date Issued: 7/1/10

Scale: None

Drawing # H-1040

CHECKED BY: MPS

HWS-H1040

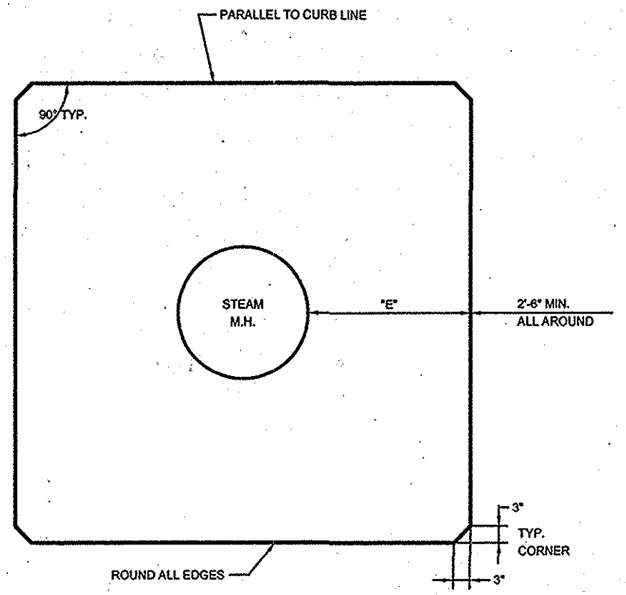

PLAN
N.T.S.

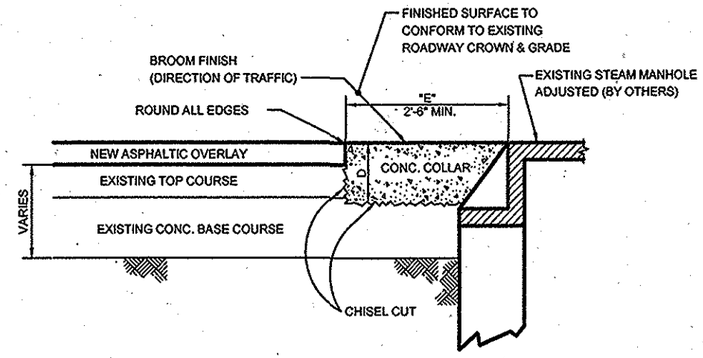

PARTIAL SECTION
N.T.S.

NOTES

1. DEPTH "D" TO BE TO THE TOP OF THE EXISTING CONC. BASE. THE CONC. BASE SHALL BE CHIPPED CLEAN AND AN EPOXY BONDING COMPOUND SHALL BE APPLIED THERETO.
2. SHOULD THE DEPTH "D" TO THE TOP OF THE EXISTING CONC. BASE BE LESS THAN 6" THE BASE SHALL BE CUT DOWN TO A MIN. OF 6" AND AN EPOXY BONDING COMPOUND WILL BE APPLIED TO THE EXPOSED CONC. SURFACE.
3. CONC. PAVEMENT SHALL BE CLASS "A" CONC. (4000 psi AT 28 DAYS).
4. PRICE BID SHALL INCLUDE ALL EXCAVATION, PREPARATION, EPOXY, CONC., FINISHING, ETC., REQ'D FOR THE PROPER INSTALLATION.
5. THE PERIMETER OF THE EXCAVATED AREA SHALL BE CUT SQUARE IN ORDER TO PROVIDE FOR AN EVENLY FINISHED AREA.
6. IF THE SEPARATION BETWEEN TWO OR MORE CASTINGS IS SMALLER THAN 3" THE RESTORATION SHALL BE AS ONE UNIT WHILE THE PAY ITEM SHALL BE THE NUMBER OF MANHOLES (VALVE BOXES) INCORPORATED INTO THE WORK.
7. FOR CONC. COLLAR AROUND STEAM VALVE BOXES CONSTRUCTION WILL BE SIMILAR EXCEPT EDGE DISTANCE "E" SHALL BE 1'-0".

REVISION NO.	DESCRIPTION	DATE	APPROVED

NEW YORK CITY DOT

New York City
Department of Transportation

CONCRETE COLLAR AROUND
STEAM MANHOLE AND
STEAM VALVE

Approved:
Chief Engineer
Department of Transportation

Approved:
Associate Commissioner
Infrastructure/Design
Department of Design + Construction

Date Issued: 7/1/10

Scale: None

Drawing # H-1041

CHECKED BY: MR

NWS-H1041

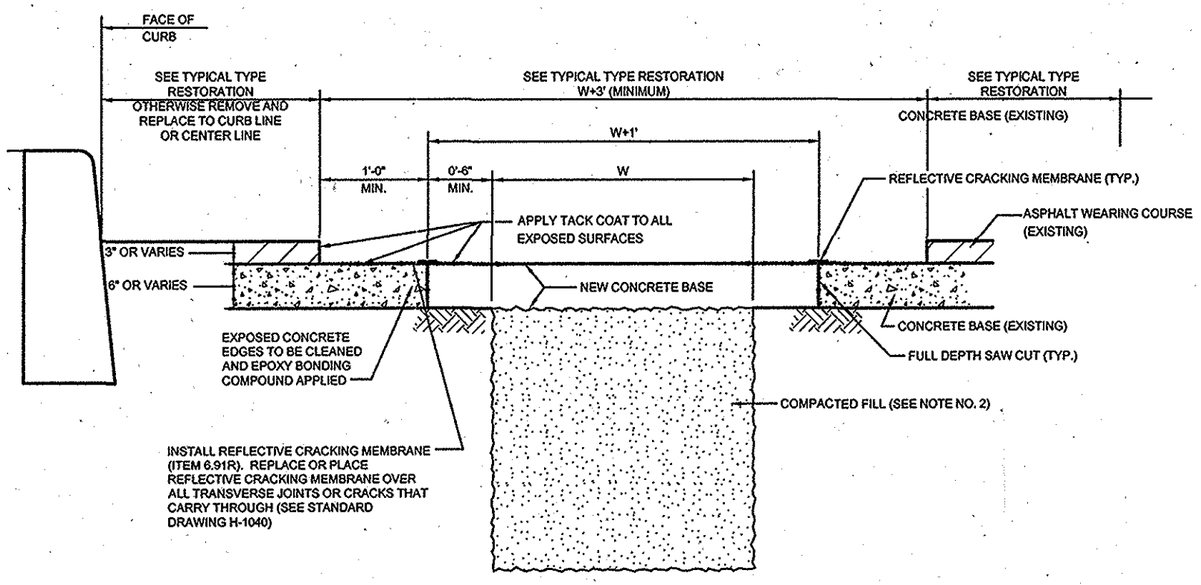

RESTORATION DETAIL
N.T.S.

TYPICAL TYPE RESTORATION

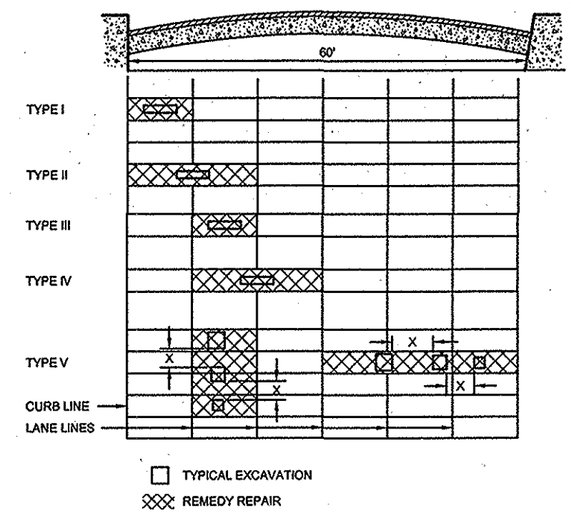

NOTES:

1. ALL UNDERMINED BASE SHALL BE REMOVED PRIOR TO BACKFILLING.
2. ALL TRENCHES SHALL BE BACKFILLED WITH GOOD TO EXCELLENT FILL AS PER NYCDOT STANDARD HIGHWAY SPECIFICATIONS.
3. SAW CUTTING BACK CONCRETE BASE, SQUARING AND ALIGNING OF CUT LIMITS TO BE PERFORMED ONLY AFTER COMPLETION OF THE COMPACTION OF THE BACKFILL TO THE BOTTOM OF THE BASE.
4. BACKFILL MATERIAL SHALL BE DEPOSITED IN HORIZONTAL LAYERS NOT EXCEEDING 12" IN THICKNESS PRIOR TO COMPACTION. A MINIMUM OF 95% OF STANDARD MAXIMUM DENSITY WILL BE REQUIRED. WHEN PLACING BACKFILL AROUND PIPES, LAYERS SHALL BE DEPOSITED TO PROGRESSIVELY BURY THE PIPE TO EQUAL DEPTHS ON BOTH SIDES. COMPACTION SHALL BE ACHIEVED BY THE USE OF IMPACT RAMMERS, PLATE OR SMALL DRUM VIBRATORS OR PNEUMATIC BUTTON HEAD COMPACTION EQUIPMENT. HAND TAMPING IS NOT PERMITTED EXCEPT IN THE IMMEDIATE AREA OF THE UNDERGROUND FACILITY.
5. ALL RESTORATION SHALL CONFORM TO THE STANDARDS AND SPECIFICATIONS OF NYC DEPARTMENT OF TRANSPORTATION AND IN PROCESS INSPECTION AND TESTING SHALL BE CERTIFIED BY A LICENSED PROFESSIONAL ENGINEER.
6. WHEN THE EXISTING PAVEMENT IS ASPHALT ON CONCRETE BASE THEN RESTORATION SHALL BE AS SHOWN ON THIS RESTORATION DETAIL. CONCRETE SHALL BE REMOVED TO A WIDTH OF W + 1 FT. BY FULL DEPTH SAWCUTTING. ASPHALT SHALL BE REMOVED TO A WIDTH OF NOT LESS THAN W + 3 FT. BY SAWCUT AND GRINDING OR PEELING SO AS NOT TO DAMAGE CONCRETE BASE. THE SAWCUT SHALL ALIGN WITH THE LANE MARKING OR DIRECTION OF TRAFFIC, IF THERE ARE NO LANE MARKINGS, AND PERPENDICULAR THERETO.
7. WHEN THE EXISTING PAVEMENT IS ASPHALT MACADAM WITHOUT CONCRETE BASE. THE CONTRACTOR SHALL SAWCUT A WIDTH OF NOT LESS THAN W + 1' OF THE EXISTING PAVEMENT AND RESTORE THIS TO CONFORM TO THE EXISTING PAVEMENT AND SUB-BASE MATERIAL BUT MUST PLACE NOT LESS THAN 6" OF ASPHALT MACADAM ON 6" OF CRUSHED STONE AGGREGATE SIZED TO 1" TO 3". THE RESTORATION SHALL CONFORM TO THE TYPICAL TYPE RESTORATION ABOVE. WHERE NO MARKING EXIST THE ALIGNMENT SHALL BE SO THAT SAWCUT DOES NOT FALL UNDER A WHEEL TRACK.
8. WHEN X DISTANCE BETWEEN HOLES IS GREATER THAN 10 FT. FROM EDGE TO ABUTTING EDGE. THE CONCRETE BASE SHALL BE OPENED SEPARATE FOR EACH HOLE. A SERIES OF SMALL HOLES SPACED 10 FT. OR LESS FROM EDGE TO ABUTTING EDGE SHALL BE OPENED TO A CONTINUOUS TRENCH. SEE TYPE V RESTORATION.
9. ALL REPAIRS SHALL CONFORM TO TYPICAL TYPE RESTORATION I THRU V ABOVE.
10. FOR TRENCH OR HOLE RESTORATION AT BUS STOPS OF FULL DEPTH CONCRETE OR ANY FULL DEPTH CONCRETE PAVEMENT, SEE STANDARD DRAWING 1050 FOR CONSTRUCTION DETAILS AND STANDARD DRAWING 1042B FOR RESTORATION DETAILS.
11. FOR RESTORATION OF CONCRETE COLLARS AROUND STEAM MANHOLES SEE STANDARD DRAWING H-1041. FOR BUS STOPS REFER TO STANDARD DRAWING H-1005 AND H-1005A.

REVISION NO.	DESCRIPTION	DATE	APPROVED

NEW YORK CITY DOT

New York City
Department of Transportation

STANDARD TRENCH OR HOLE RESTORATION
FOR STREETS PROTECTED BY
NYC ADMINISTRATIVE CODE § 19-144

Approved:
Chief Engineer
Department of Transportation

Approved:
Associate Commissioner
Infrastructure/Design
Department of Design + Construction

Date Issued: 7/1/10

Scale: None

Drawing # H-1042A

CHECKED BY: MG

HWS-H1042A

NOTES

1. ALL TRENCHES SHALL BE BACKFILLED WITH GOOD TO EXCELLENT FILL AS PER THE NYC DEPARTMENT OF TRANSPORTATION SPECIFICATIONS.
2. BACKFILL MATERIAL SHALL BE DEPOSITED IN HORIZONTAL LAYERS NOT EXCEEDING 12" IN THICKNESS PRIOR TO COMPACTION. A MINIMUM OF 95% OF STANDARD MAXIMUM DENSITY WILL BE REQUIRED WHEN PLACING BACKFILL. LAYERS SHALL BE DEPOSITED TO PROGRESSIVELY BURY THE UTILITY TO EQUAL DEPTHS ON BOTH SIDES. COMPACTION SHALL BE ACHIEVED BY THE USE OF IMPACT HAMMERS, PLATE OR SMALL DRUM VIBRATORS OR PNEUMATIC BUTTON HEAD COMPACTION EQUIPMENT. HAND TAMPING IS NOT PERMITTED EXCEPT IN THE IMMEDIATE AREA OF THE UNDERGROUND FACILITY.
3. ALL MATERIALS USED IN THE RESTORATION SHALL CONFORM TO THE STANDARDS AND SPECIFICATIONS OF THE NYC DEPARTMENT OF TRANSPORTATION AND/OR SHALL BE APPROVED BY THE OCMC.
4. THE OUTLINE OF THE PATCH SHALL BE FULL DEPTH SAW CUTTING AT A MINIMUM DISTANCE OF 1'-6" FROM ALL EDGES OF THE EXCAVATION. (SEE SKETCH FOR DETAIL) THE BREAKUP WITH PNEUMATIC HAMMERS IS TO BEGIN AT THE CENTER OF THE PATCH AREA NOT AT THE SAW CUTS. IF THE CONTRACTOR SPALLS THE CONCRETE DURING THE REMOVAL, HE MUST MAKE A NEW SAW CUT OUTSIDE THE SAWED AREA AND REMOVE THE CONCRETE WITHOUT ADDITIONAL COMPENSATION.
5. TO MINIMIZE OR ELIMINATE PATCH HOCKING, PUMPING, AND BREAKUP, THE WIDTH OF THE PATCH SHALL NOT BE LESS THAN ONE FULL LANE WIDTH. HOWEVER, IF THE EXCAVATION EXTENDS INTO AN ADJACENT LANE THE CONCRETE IN THIS ADJACENT LANE IS TO BE REMOVED TO THE NEXT LONGITUDINAL JOINT (TO THE CURB LINE IF CUT IS IN CURB LANE). EXISTING JOINTS THEREBY REMOVED ARE TO BE RESTORED IN SUCH A MANNER SO THAT THE STRUCTURAL INTEGRITY OF THE ORIGINAL JOINT IS RETAINED. TIE BARS, IF PRESENT, SHALL IN ALL CASES BE RETAINED OR REPLACED.
6. THE EDGE OF THE PATCH SHALL NOT BE CLOSER THAN 10' TO THE NEAREST TRANSVERSE JOINT. IF SAID EDGE FALLS WITHIN THIS TEN (10) FOOT DISTANCE ALL CONCRETE UP TO THE JOINT SHALL BE REMOVED AND REPLACED TO SAID BOUNDARY. LIKEWISE, THE EDGE OF THE PATCH SHALL NOT BE CLOSER THAN 1'-0" BEYOND THE FAR SIDE OF THE HARDWARE. JOINTS MAY BE ROUGH FACED OR SMOOTH FACED BUT IN ALL CASES THE STRUCTURAL INTEGRITY OF THE EXISTING JOINT IS TO BE RETAINED. LOAD TRANSFER DEVICES, IF PRESENT, SHALL BE RETAINED OR REPLACED.
7. IMMEDIATELY PRIOR TO THE PLACING OF THE NEW CONCRETE ALL EXPOSED EDGES OF THE OLD CONCRETE SHALL HAVE A CEMENT-WATER-SAND GROUT OR EPOXY BONDING COMPOUND BRUSHED ON.
8. A WIRE MESH OF THE SAME SIZE AS THAT IN THE ORIGINAL PAVEMENT SHALL BE PLACED IN THE PATCH AREA. NO PHYSICAL TIE TO THE EXISTING MESH WILL BE REQUIRED. THIS MESH WILL BE PLACED APPROX. 2-1/2" BELOW THE ROADWAY SURFACE.
9. A CONVENTIONAL CONCRETE MIXTURE CONTAINING AN INCREASED CEMENT FACTOR (9 BAG MIX TYPE III CEMENT), REDUCED WATER CONTENT, SUPERPLASTICIZER AND AN ACCELERATOR IS TO BE USED SO THAT THE PATCH CAN BE OPENED TO TRAFFIC WITHIN A TWENTY-FOUR HOUR PERIOD, OR BEFORE, IF AND WHEN THE CONCRETE HAS OBTAINED A STRENGTH OF 2500 PSI OR BETTER. UNTIL THIS TIME THE PATCH SHALL BE PROTECTED FROM TRAFFIC BY PLATING AND/OR BARRICADING.
10. EXTRA ATTENTION IS TO BE GIVEN TO ENSURE THAT THE PATCH IS WELL VIBRATED AROUND THE EDGES AND THAT IT IS NOT OVER FINISHED. THE PATCH SHOULD BE STRUCK OFF TWO OR THREE TIMES TO ENSURE THAT ITS SURFACE IS EVEN WITH THE ADJACENT CONCRETE. THE FINISHED TEXTURE SHALL MATCH THAT OF THE ADJACENT PAVEMENT.
11. A CLEAR CURING AND SEALING COMPOUND SHALL BE APPLIED TO THE FINISHED SURFACE.

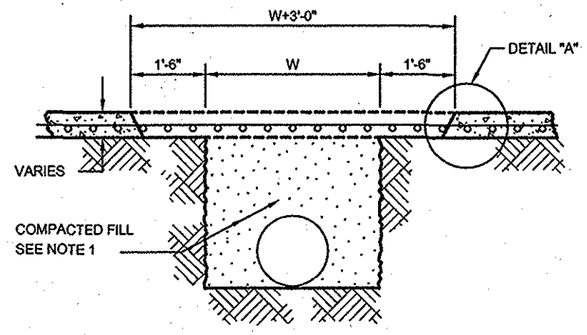

CONCRETE PAVEMENT RESTORATION DETAIL
N.T.S.

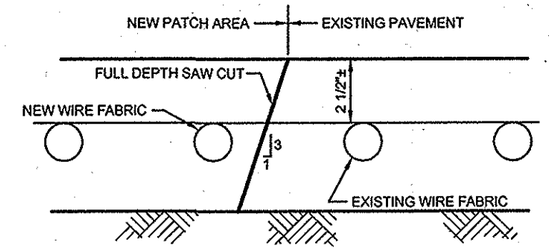

DETAIL "A"
N.T.S.

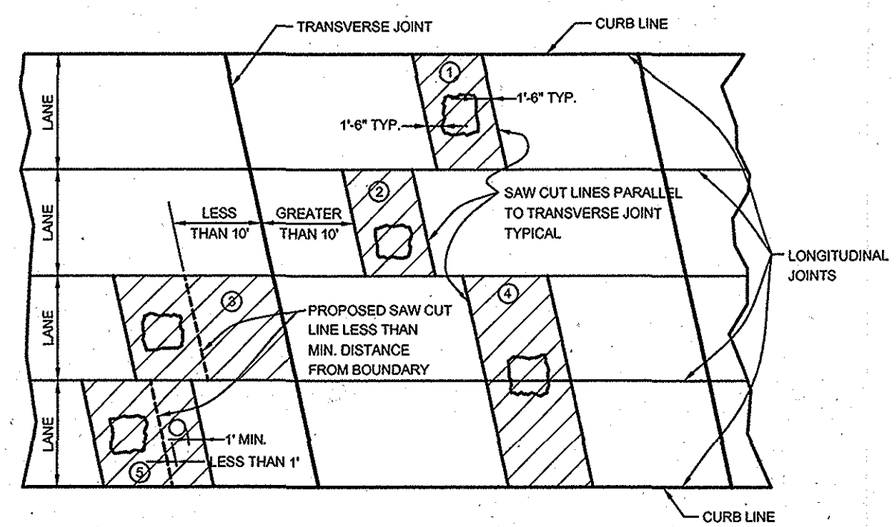

PLAN VIEW
TYPICAL PATCH REPAIRS

LEGEND

- EXCAVATION AREA
- STREET HARDWARE
- PATCH AREA

REVISION NO.	DESCRIPTION	DATE	APPROVED

NEW YORK CITY DOT

New York City
Department of Transportation

CONCRETE PAVEMENT RESTORATION

Approved:
Chief Engineer
Department of Transportation

Approved:
Associate Commissioner
Infrastructure/Design
Department of Design + Construction

Date Issued: 7/1/10

Scale: None

Drawing # H-1042B

CHECKED BY: MT

NWS-H1042B

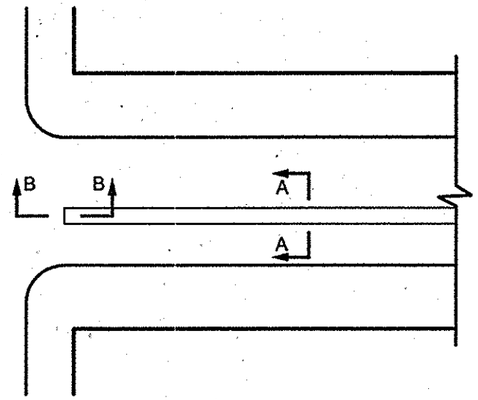

PLAN

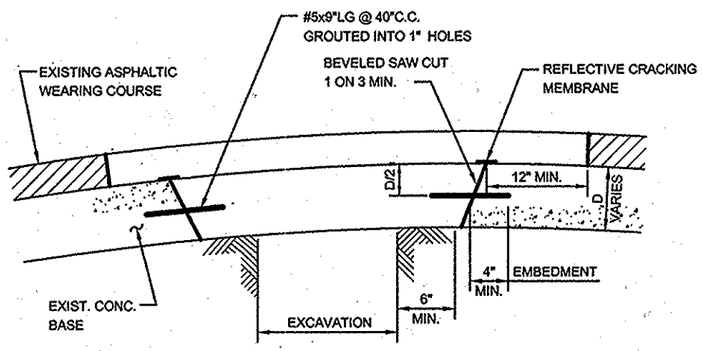

SECTION A-A

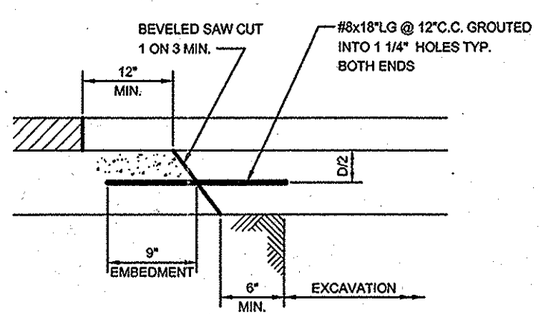

SECTION B-B

1. ALL UNDERMINED BASE SHALL BE REMOVED PRIOR TO BACKFILLING.
2. ALL TRENCHES SHALL BE BACKFILLED WITH MATERIAL MEETING NYC DEPARTMENT OF TRANSPORTATION STANDARD HIGHWAY SPECIFICATIONS, SECTION 4.11.
3. WHEN PLACING FILL OR BACKFILL AROUND PIPES OR OTHER UNDERGROUND FACILITIES, SIX (6") INCH LAYERS SHALL BE DEPOSITED TO PROGRESSIVELY BURY THE FACILITY TO EQUAL DEPTH ON BOTH SIDES AND FOR THE FULL DEPTH AND WIDTH OF THE TRENCH EXCAVATED FOR THE FACILITY. THE ABOVE METHOD OF FILL OR BACKFILL SUPERSEDES THE FILL OR BACKFILL METHODS AS SPECIFIED ELSEWHERE IN THE NYC DEPARTMENT OF TRANSPORTATION (DOT) STANDARD SPECIFICATIONS FOR THE PRIVATELY OWNED OR CITY OWNED UTILITIES. IN DEEP TRENCHES, IN LIEU OF DEPOSITING AND COMPACTING THE BACKFILL FROM TWO (2') FEET ABOVE THE UNDERGROUND FACILITY TO A PLANE FIVE (5') FEET BELOW FINAL SURFACE IN ACCORDANCE WITH THE ABOVE SPECIFIED PROCEDURE, THE CONTRACTOR MAY SUBMIT TO THE COMMISSIONER OF DEPT. OF TRANSPORTATION, FOR APPROVAL, AN ALTERNATE BACKFILL METHOD (i.e., PUDDLING, JETTING, DEEPER COMPACTION LAYERS, ETC.). THIS SUBMITTAL MUST FULLY DESCRIBE THE ALTERNATE METHOD, INCLUDING PROPOSED EQUIPMENT, BACKFILL MATERIAL, DEPTH OF COMPACTION LAYER AND TRENCH LOCATIONS WHERE IT WILL BE EMPLOYED. HOWEVER, APPROVAL OF ANY ALTERNATE BACKFILL METHOD SHALL NOT RELIEVE THE CONTRACTOR FROM OBTAINING A MINIMUM 95% STANDARD PROCTOR MAXIMUM DENSITY. SHOULD THE COMMISSIONER DETERMINE THAT THE SPECIFIED DENSITY IS NOT BEING OBTAINED, THE AREA MUST BE RE-EXCAVATED AND BACKFILLED UNTIL THE REQUIRED COMPACTION DENSITY IS ACHIEVED.
4. ALL RESTORATION SHALL CONFORM TO THE STANDARDS AND SPECIFICATIONS OF THE NYC D.O.T. AND IN PROCESS INSPECTION AND TESTING SHALL BE CERTIFIED BY A LICENSED PROFESSIONAL ENGINEER.
5. THE CONCRETE BASE OF THE EXISTING COMPOSITE PAVEMENT SHALL BE REMOVED WITH A BEVELED SAW CUT, AS SHOWN ON THE DETAIL, TO DIMENSIONS A MINIMUM OF SIX INCHES GREATER THAN THE EXCAVATION AT THE BASE OF THE BEVEL. ASPHALT SHALL BE REMOVED TO DIMENSIONS TWELVE INCHES GREATER THAN THE OPENING OF THE CONCRETE BASE AT THE TOP OF THE BEVEL BY SAWCUT AND GRINDING OR PEELING SO AS NOT TO DAMAGE THE CONCRETE BASE.
6. THE BEVELED SAW CUT SURFACE SHALL BE ROUGHENED WITH A SMALL IMPACT HAMMER, 20 LBS. OR LESS, WITH A CHISEL POINT AT LEAST ONE INCH WIDE.
7. STEEL REINFORCING BARS, AS SPECIFIED ON THE DETAIL, SHALL BE GROUTED INTO DRILLED HOLES WITH CONCRETE GROUTING MATERIAL CONFORMING TO NEW YORK STATE DEPARTMENT OF TRANSPORTATION SPECIFICATION 701-05.
8. THE ROUGHENED BEVELED SURFACE SHALL BE AIR BLASTED TO REMOVE DUST AND LOOSE PARTICLES PRIOR TO COATING WITH A TWO COMPONENT BONDING COMPOUND CONFORMING TO NEW YORK STATE DEPARTMENT OF TRANSPORTATION SPECIFICATION 721-03, EPOXY POLYSULFIDE GROUT.
9. A CONVENTIONAL CONCRETE MIXTURE CONTAINING AN INCREASED CEMENT FACTOR (9 BAG MIX, TYPE III CEMENT), REDUCED WATER CONTENT, SUPERPLASTICIZER AND AN ACCELERATOR SHALL BE USED SO THAT THE RESTORATION CAN BE OPENED TO TRAFFIC WITHIN A TWENTY-FOUR HOUR PERIOD WHEN THE CONCRETE HAS ATTAINED A STRENGTH OF 2,500 PSI OR BETTER. UNTIL THIS TIME, THE RESTORATION SHALL BE PROTECTED FROM TRAFFIC BY PLATING AND/OR BARRICADING.
10. MATCH EXISTING TRANSVERSE JOINTS AND SAW CUTS IN EXISTING CONCRETE BASE.
11. INSTALL REFLECTIVE CRACKING MEMBRANE OVER EACH BEVELED SAW CUT. REPLACE OR PLACE REFLECTIVE CRACKING MEMBRANE OVER ALL TRANSVERSE JOINTS OR CRACKS THAT CARRY THROUGH. IF THE WIDTH OF THE RESTORATION IS TWO FEET OR LESS, PLACE THE REFLECTIVE CRACKING MEMBRANE OVER THE FULL WIDTH OF THE REPAIR.
12. APPLY A TACK COAT TO ALL EXPOSED CONCRETE SURFACES BEFORE INSTALLING NEW ASPHALTIC CONCRETE WEARING COURSE.

REVISION NO.	DESCRIPTION	DATE	APPROVED

NEW YORK CITY DOT

New York City
Department of Transportation

ROADWAY RESTORATION FOR
NEWLY CONSTRUCTED ROADWAYS

Approved:
Chief Engineer
Department of Transportation

Approved:
Associate Commissioner
Infrastructure/Design
Department of Design + Construction

Date Issued: 7/1/10

Scale: None

Drawing # H-1042C

CHECKED BY: MR

RWS-H1042C

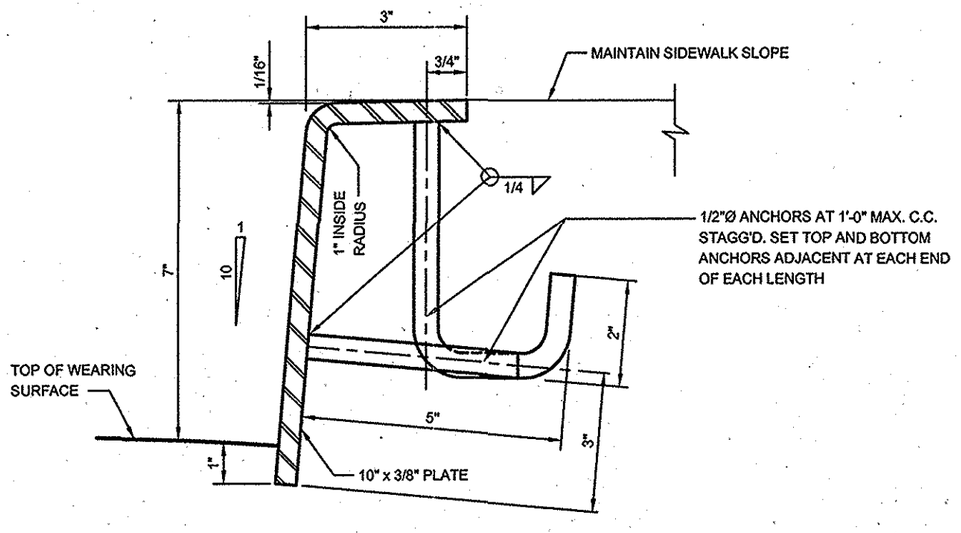

DETAIL

N.T.S.

NOTES

1. EXPANSION JOINTS IN THE STEEL CURB FACING AND CONCRETE BACKING SHALL BE AT A MAXIMUM SPACING OF 24 FEET.
2. THE EXPANSION JOINTS OF THE CURB AND STEEL CURB FACING SHALL LINE UP WITH THE EXPANSION JOINTS OF THE CONCRETE SIDEWALKS.
3. NO PIECE OF STEEL CURB FACING HAVING LESS THAN TWO (2) WELDED DOWELS MAY BE INSTALLED UNLESS IT IS WELDED TO THE ADJACENT STEEL CURB FACING.
4. 1/2" Ø x 5" HEADED ANCHOR STUDS (GRANULAR OR SOLID FLUX FILLED) MAY BE SUBSTITUTED.
5. STRUCTURAL STEEL AS PER BOARD OF STD. SPECS. 20-S-35 TYPE A-1 (A.S.T.M. DESIGNATION A36).
6. SURFACE TO BE PAINTED SHALL BE THOROUGHLY CLEANED AND THEN PAINTED AS PER REQUIREMENTS OF SECTION 2.13 IN THE NYC DOT STANDARD HIGHWAY SPECIFICATIONS. THE COLOR OF TOP COAT SHALL BE GRAY AS APPROVED BY THE ENGINEER.
7. WHERE TWO (2) PIECES OF STEEL CURB FACING ARE JOINED BUT NOT WELDED, TWO (2) ONE-HALF (1/2) INCH RODS, TWENTY FOUR (24) INCHES LONG SHALL BE INSERTED INTO THE CONCRETE BACKING, ONE-HALF (1/2) THE LENGTH AT EACH SIDE OF THE JOINT.
8. CORNER CURB:-VERTICAL FACE WILL BE ACCEPTABLE FOR CORNER CURBS PROVIDING THE ENDS ARE WARPED TO FORM A TRANSITION WITH ADJACENT BATTERED FACE CURBS.

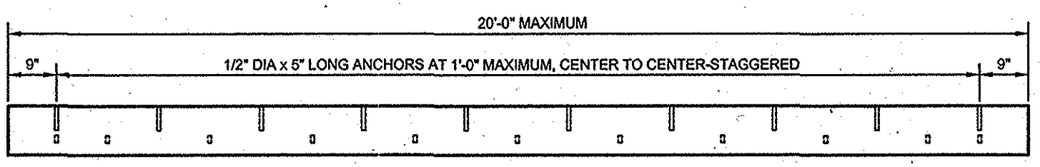

ELEVATION-STEEL FACING FOR BRIDGE DECK CURBS

N.T.S.

CHECKED BY: MR

HWS-H1043

REVISION NO.	DESCRIPTION	DATE	APPROVED

NEW YORK CITY DOT

New York City
Department of Transportation

STEEL FACED CURB
STEEL FACING TYPE D
FOR STRUCTURES

Approved:
Chief Engineer
Department of Transportation

Approved:
Associate Commissioner
Infrastructure/Design
Department of Design + Construction

Date Issued: 7/1/10

Scale: None

Drawing # H-1043

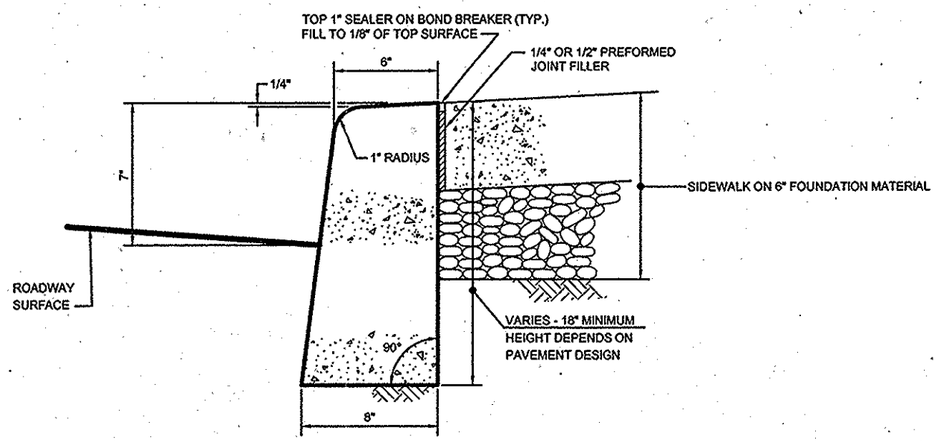

DETAIL
N.T.S.

NOTES:

1. ALL MATERIALS AND CONSTRUCTION METHODS USED ARE TO CONFORM TO SECTION #4.08 OF THE NYC DEPARTMENT OF TRANSPORTATION STANDARD HIGHWAY SPECIFICATIONS.

REVISION NO.	DESCRIPTION	DATE	APPROVED

NEW YORK CITY DOT

New York City
Department of Transportation

CONCRETE CURB

Approved:
Chief Engineer
Department of Transportation

Approved:
Associate Commissioner
Infrastructure/Design
Department of Design + Construction

Date Issued: 7/1/10

Scale: None

Drawing # H-1044

CHECKED BY: MZ

HWS-H1044

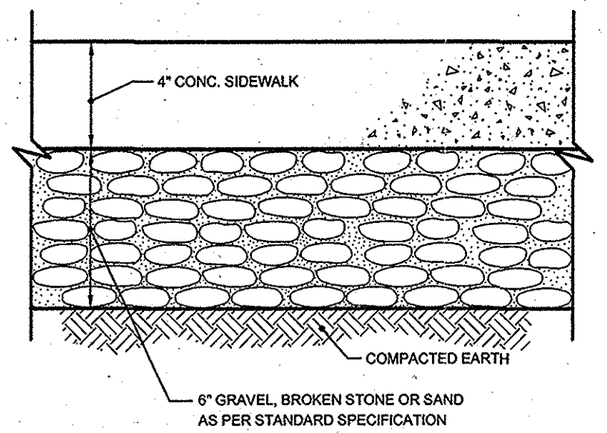

TYPE I - SIDEWALK, OUTSIDE DRIVEWAY
AND CORNER QUADRANTS
N.T.S.

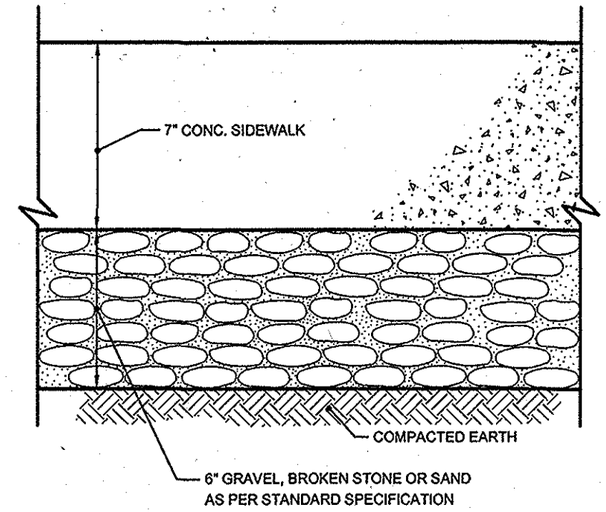

TYPE II - SIDEWALK, IN DRIVEWAY
AND IN CORNER QUADRANTS
N.T.S.

NOTES:

1. ALL MATERIALS AND CONSTRUCTION METHODS USED ARE TO CONFORM TO SECTION #4.13 OF THE NYC DEPARTMENT OF TRANSPORTATION (DOT) STANDARD HIGHWAY SPECIFICATIONS.
2. WELDED WIRE FABRIC, WHERE SPECIFIED, SHALL BE ASTM DESIGNATION A-185, GAUGE # 8/8 AT 6"x6" SPACING, AND CONFORM TO SECTION # 2.25 OF THE NYCDOT STANDARD HIGHWAY SPECIFICATIONS.

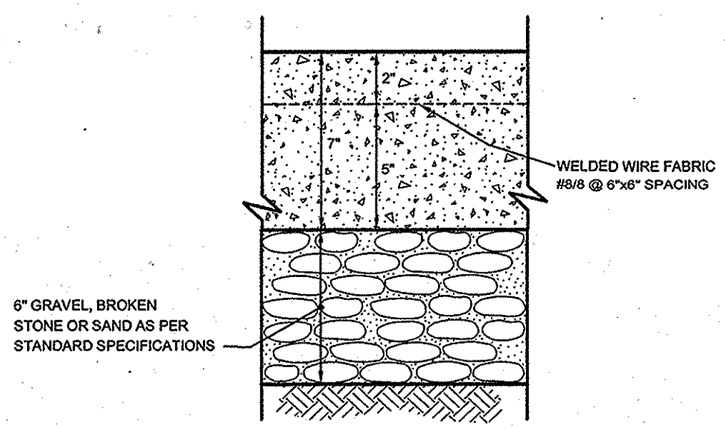

TYPE III - SIDEWALK
WITH WELDED WIRE FABRIC
N.T.S.

REVISION NO.	DESCRIPTION	DATE	APPROVED

NEW YORK CITY DOT

New York City
Department of Transportation

CONCRETE SIDEWALK

Approved:
Chief Engineer
Department of Transportation

Approved:
Associate Commissioner
Infrastructure/Design
Department of Design + Construction

Date Issued: 7/1/10

Scale: None

Drawing # H-1045

CHECKED BY: MZ

RWS-H1045

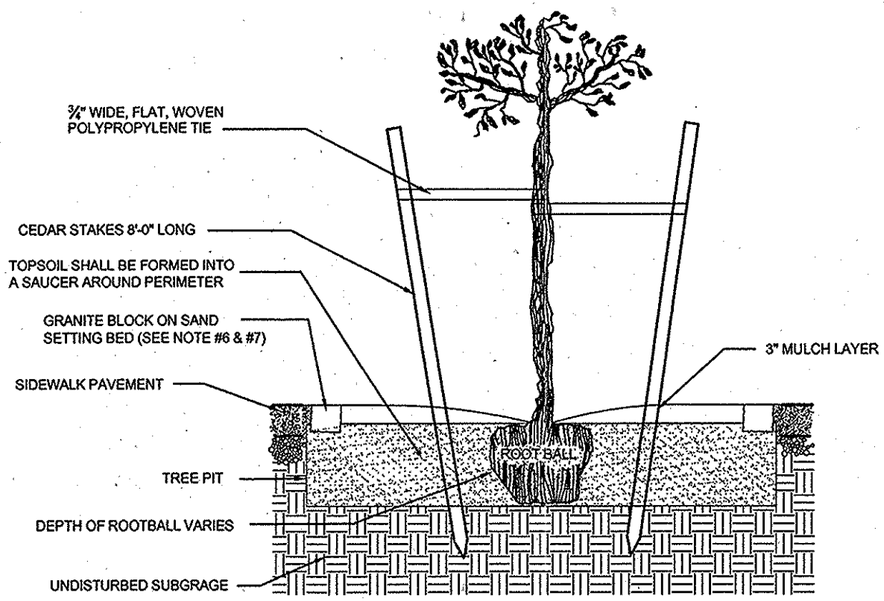

SECTION A-A

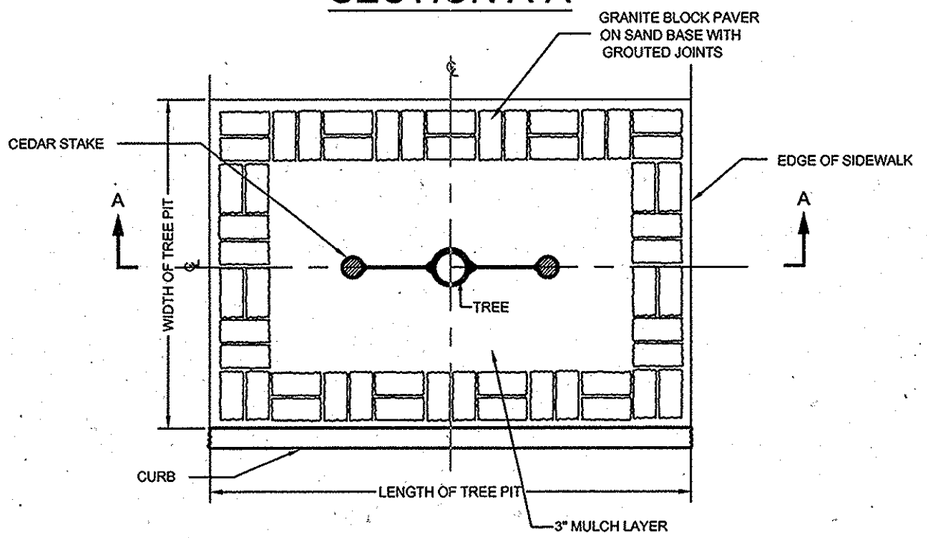

PLAN

TREE PLANTING, STAKING AND TREE PIT PAVEMENT DETAILS FOR SIDEWALK AREAS

TREE PITS SHALL BE 4' X 5' OR 5' X 5' OR 5' X 10' AS SPECIFIED

NOTES:

1. ALL MATERIALS AND CONSTRUCTION METHODS USED ARE TO CONFORM TO SECTION # 4.16 OF THE STANDARD HIGHWAY SPECIFICATIONS, LATEST EDITION.
2. PRIOR TO THE START OF WORK, THE CONTRACTOR SHALL OBTAIN THE NECESSARY PERMIT FROM THE DEPT. OF PARKS AND RECREATION FOR THE REMOVAL AND PLANTING OF TREES.
3. TREE PITS SHOULD BE LOCATED TWO (2) FEET MINIMUM FROM GAS, OIL OR WATER BOXES.
4. TREE STAKES ARE TO BE REMOVED BY THE TREE SUBCONTRACTOR NOT LESS THAN ONE YEAR AFTER PLANTING OF SAID TREES AND PRIOR TO THE FINAL ACCEPTANCE OF THE WORK.
5. USE OF SIDEWALK PAVEMENT MATERIALS OTHER THAN GRANITE BLOCK MUST BE SPECIFICALLY APPROVED, IN WRITING, BY ENGINEER.
6. GRANITE BLOCK IN TREE PIT SHALL BE PAID FOR UNDER ITEM NO. 6.06 AB OR 6.06 BB, AS APPLICABLE.
7. WHERE CONCRETE PAVERS ARE SPECIFIED FOR USE IN TREE PITS THEY SHALL BE PAID FOR UNDER ITEM NO. 6.47 TP.

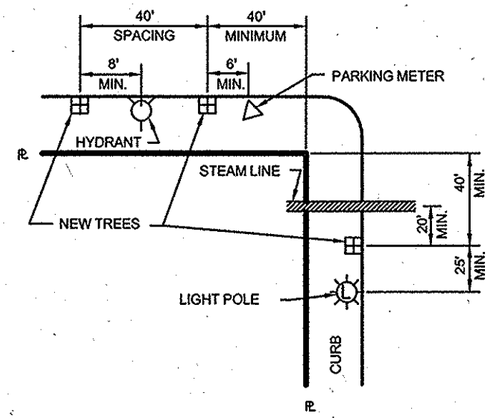

REQUIRED STREET TREE SPACING

REVISION NO.	DESCRIPTION	DATE	APPROVED

NEW YORK CITY DOT

New York City
Department of Transportation

STREET TREE
PLANTING DETAIL
TYPE 1

Approved:
Chief Engineer
Department of Transportation

Approved:
Associate Commissioner
Infrastructure/Design
Department of Design + Construction

Date Issued: 7/1/10

Scale: None

Drawing # H-1046

CHECKED BY: MZ

HWS-H1046

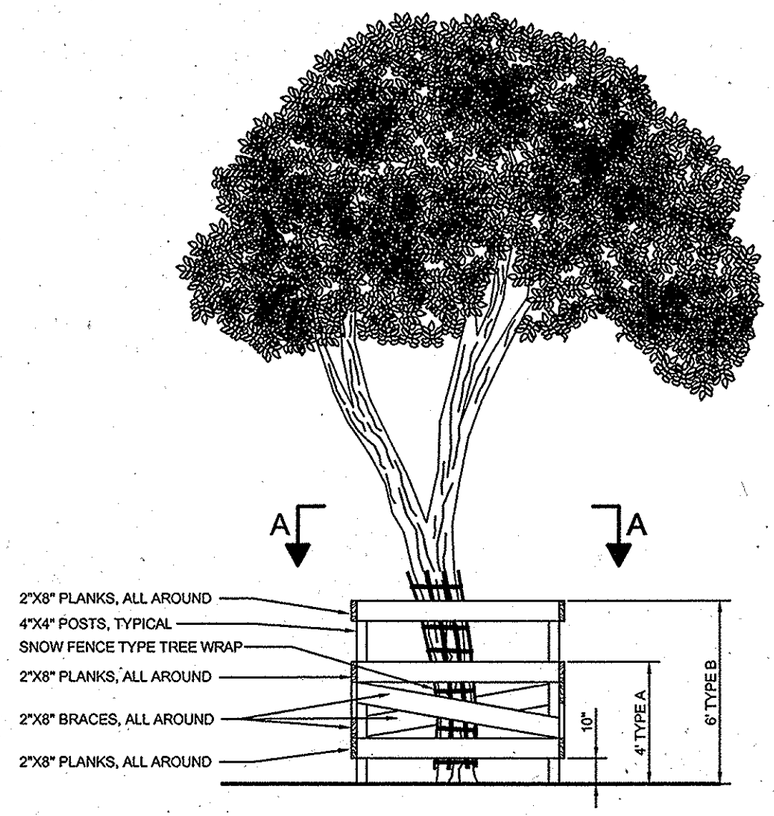

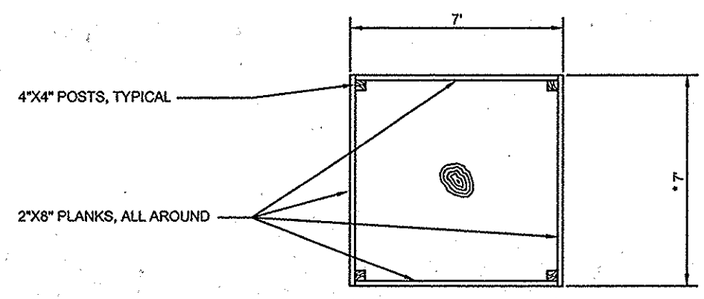

* WIDTH MAY BE REDUCED TO 5' ON NARROW SIDEWALKS AS REQUIRED TO MAINTAIN SIDEWALK CLEARANCE OF 3' (THREE FEET) AT THE TREE BARRIERS ONLY.

SECTION A-A
DETAILS - PROTECTIVE TREE BARRIER

REVISION NO.	DESCRIPTION	DATE	APPROVED

NEW YORK CITY DOT

New York City
Department of Transportation

PROTECTIVE TREE BARRIER

Approved:
Chief Engineer
Department of Transportation

Approved:
Associate Commissioner
Infrastructure/Design
Department of Design + Construction

Date Issued: 7/1/10

Scale: None

Drawing # H-1046A

CHECKED BY: MZ

HWS-H1046A

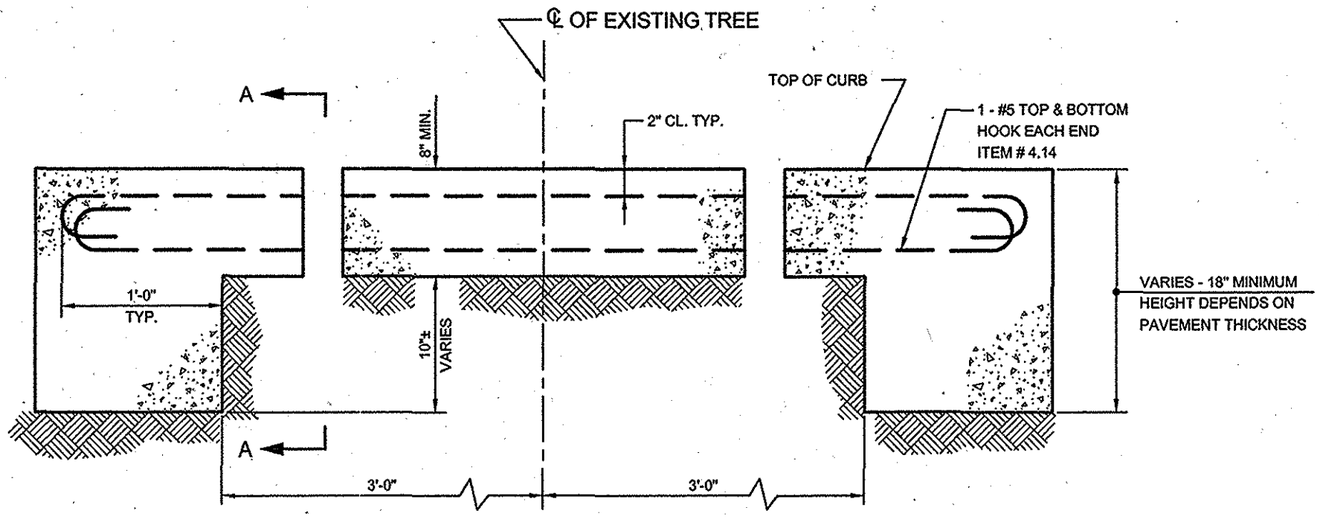

TYPICAL CURB DETAIL
AT EXISTING TREES
N.T.S.

NOTES

1. THIS DETAIL SHALL APPLY FOR BOTH CONCRETE AND STEEL FACED CONCRETE CURB AND SHALL BE USED WHERE DIRECTED BY THE ENGINEER.
2. FOR STEEL FACED CONCRETE CURB, CUT STEEL FACING AT HAUNCH (8" BELOW TOP OF CURB). THE STEEL SHALL BE CUT IN SUCH A MANNER THAT THE BOTTOM ANCHORS ARE NOT REMOVED.
3. THE CONTRACTOR SHALL HAND EXCAVATE FOR A DISTANCE OF 4'-0" ON EACH SIDE OF CENTERLINE OF EXISTING TREE TO REMAIN, ITEM # 8.02 B OR 8.02 AB-S.
4. BULKHEAD OPENING SO THAT PAVEMENT DOES NOT ENCROACH ON OPEN AREA.
5. ALL MATERIALS & CONSTRUCTION METHODS USED ARE TO CONFORM TO SECTIONS # 4.08 & # 4.09 OF THE NYC DEPT. OF TRANSPORTATION STANDARD HIGHWAY SPECIFICATIONS.

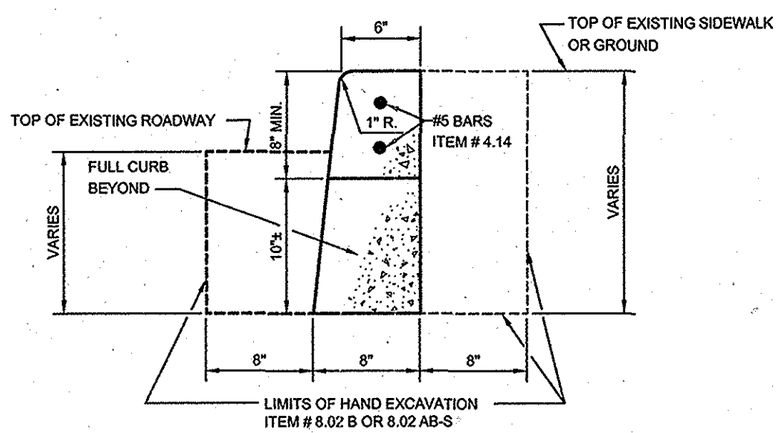

SECTION A-A
N.T.S.

REVISION NO.	DESCRIPTION	DATE	APPROVED

NEW YORK CITY DOT

New York City
Department of Transportation

TYPICAL CURB DETAIL
AT EXISTING TREES

Approved:
Chief Engineer
Department of Transportation

Approved:
Associate Commissioner
Infrastructure/Design
Department of Design + Construction

Date Issued: 7/1/10

Scale: None

Drawing # H-1047

CHECKED BY: MZ

HWS-H1047

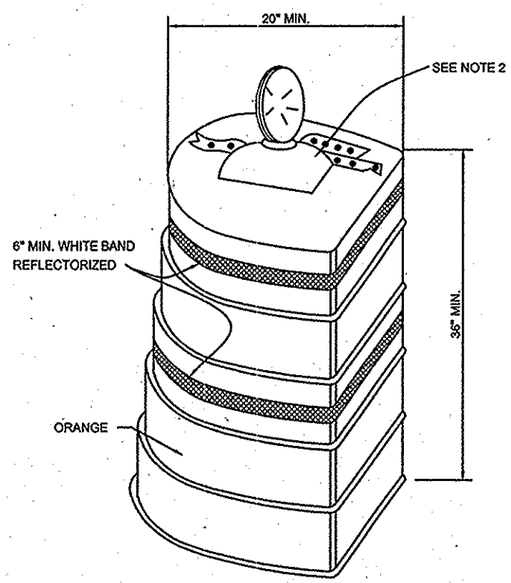

PLASTIC BARREL
N.T.S

NOTES:

1. BARREL MUST BE PLASTIC AND SPECIFICALLY DESIGNED AS A TRAFFIC CONTROL DEVICE. THE BARREL MUST BE FLATTENED ON AT LEAST ONE SIDE OR OTHERWISE DESIGNED SO THAT IT WILL NOT ROLL IF OVERTURNED.
2. THE BATTERY POWERED LIGHT IS FOR NIGHT USE ONLY. USE TYPE A LOW INTENSITY FLASHING LIGHT FOR POINT HAZARDS. USE TYPE C LOW INTENSITY STEADY BURN LIGHTS FOR CHANNELIZATION. THE LIGHT SHALL BE PHOTO CELL CONTROLLED FOR NIGHT USE.
3. ALL MATERIALS & METHODS USED ARE TO CONFORM TO SECTION #6.87 OF THE STANDARD SPECIFICATIONS, LATEST EDITION, AS AMENDED.

REVISION NO.	DESCRIPTION	DATE	APPROVED

NEW YORK CITY DOT

New York City
Department of Transportation

PLASTIC BARREL

Approved:
Chief Engineer
Department of Transportation

Approved:
Associate Commissioner
Infrastructure/Design
Department of Design + Construction

Date Issued: 7/1/10

Scale: None

Drawing # H-1049

CHECKED BY: MT

HWS-H1049

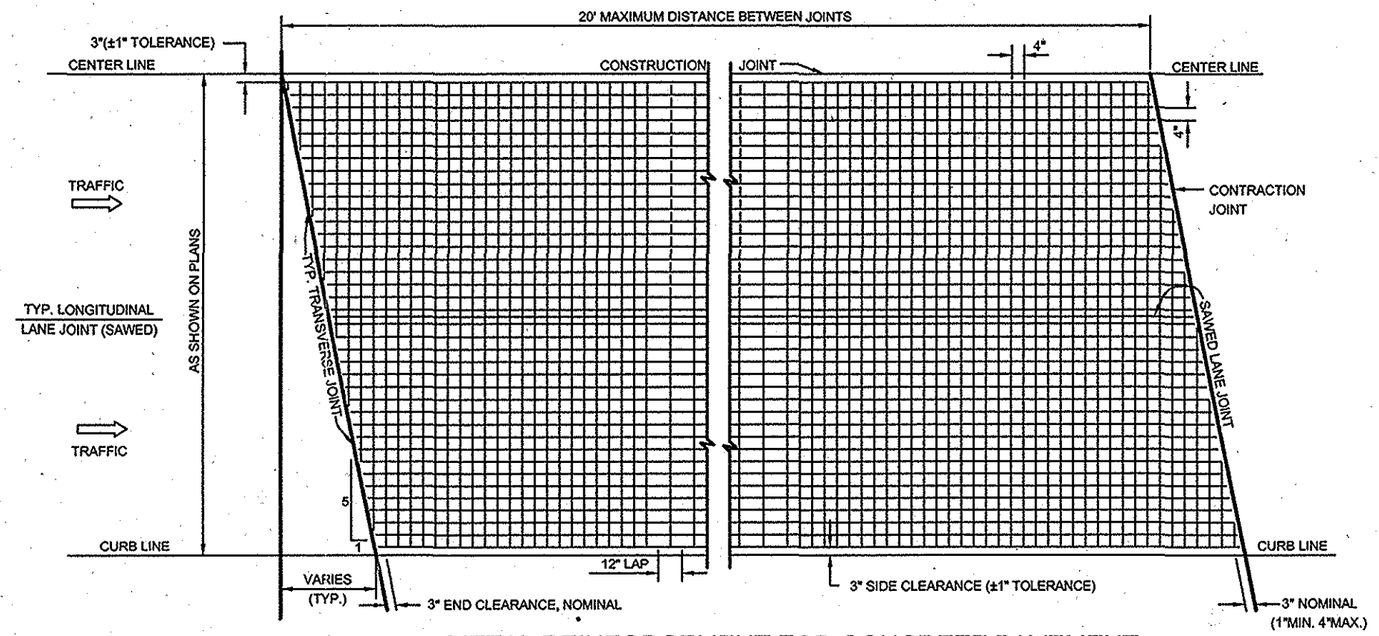

METAL REINFORCEMENT FOR CONCRETE PAVEMENT

NOT TO SCALE

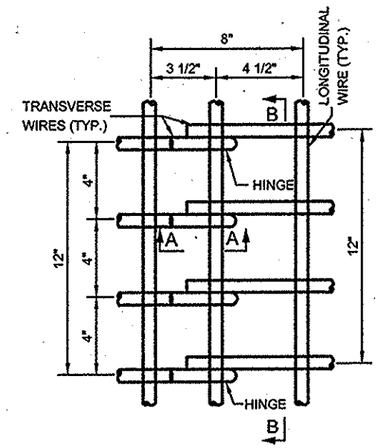

HINGE DETAIL

NOT TO SCALE

GENERAL NOTES:

1. WELDED WIRE FABRIC SHALL MEET REQUIREMENTS OF ASTM A-185.
2. WELDED WIRE FABRIC SHALL BE 4x4-W4xW4.
3. CONCRETE SHALL BE HIGH-EARLY STRENGTH AS SPECIFIED.
4. SHEETS MAY BE HINGED AS SHOWN IN THE DETAIL. HINGED SHEETS SHALL BE HINGED AT LEAST TWO LONGITUDINAL MEMBERS OFF CENTER, AND EACH ADJOINING SHEET SHALL BE REVERSED IN PLACING, IN ORDER THAT THE HINGES SHALL NOT OVERLAY EACH OTHER AT THE LAPS.
5. THE METAL REINFORCEMENT SHALL BE PLACED AT 1/2 DEPTH OF PAVEMENT.
6. THE DETAIL OF REINFORCEMENT IS SHOWN FOR HALF OF THE WIDTH OF THE ROADWAY AND IS SIMILAR IN THE OTHER HALF.
7. REINFORCEMENT FOR OTHER WIDTHS OF ROADWAY SHALL BE IN ACCORDANCE WITH THE DETAILS SHOWN,WITH APPROPRIATE DIMENSIONS.
8. CONCRETE PAVEMENT SURFACE TO BE TRANSVERSELY TEXTURED WITH A SET OF SPRING STEEL TINES (3/16" DEEP) IN A DIRECTION PARALLEL TO THE TRANSVERSE JOINT LINES.

CONTINUED ON SHEET 2 OF 4

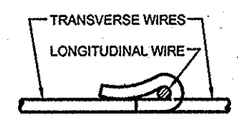

SECTION A-A

NOT TO SCALE

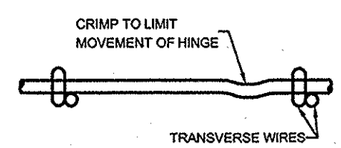

SECTION B-B

NOT TO SCALE

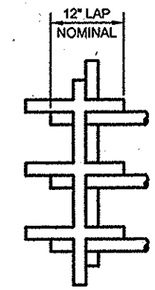

LAP DETAIL

NOT TO SCALE

REVISION NO.	DESCRIPTION	DATE	APPROVED

NEW YORK CITY DOT

New York City
Department of Transportation

REINFORCED CONCRETE PAVEMENT
CONSTRUCTION DETAILS

Approved:
Chief Engineer
Department of Transportation

Approved:
Associate Commissioner
Infrastructure/Design
Department of Design + Construction

Date Issued: 7/1/10

Scale: None

Drawing # H-1050-1

CHECKED BY: MZ

HWS-H1050-1

GENERAL NOTES CONTINUED

9. ALL JOINT DOWELS MUST BE LEVEL, TRUE AND ADEQUATELY SUPPORTED SO THERE IS NO MOVEMENT DURING THE PLACEMENT OF CONCRETE.

10. DOWELS MUST BE PARALLEL TO THE CURB LINES AND THE SURFACE OF THE SLAB. TOLERANCE OF THIS PLACEMENT SHALL BE ±1/4 INCH.

11. THE CONCRETE SHALL BE DEPOSITED ON A MOIST GRADE IN SUCH MANNER AS TO REQUIRE AS LITTLE REHANDLING AS POSSIBLE. PLACING SHALL BE CONTINUOUS BETWEEN TRANSVERSE JOINTS WITHOUT THE USE OF INTERMEDIATE BULKHEADS. NECESSARY HAND SPREADING SHALL BE DONE WITH SHOVELS, NOT RAKES. WORKMEN SHALL NOT BE ALLOWED TO WALK ON THE FRESHLY MIXED CONCRETE WITH BOOTS OR SHOES COATED WITH EARTH OR FOREIGN SUBSTANCES.

12. CONCRETE SHALL BE THOROUGHLY CONSOLIDATED AGAINST AND ALONG THE FACES OF ALL FORMS AND ALONG THE FULL LENGTH AND ON BOTH SIDES OF ALL JOINTS ASSEMBLIES. VIBRATORS SHALL NOT BE PERMITTED TO COME IN CONTACT WITH A JOINT ASSEMBLY, THE GRADE, OR A SIDE FORM. THE VIBRATOR SHALL NEVER BE OPERATED LONGER THAN 10 SECONDS IN ANY ONE LOCATION.

13. CONCRETE SHALL BE DEPOSITED AS NEAR TO EXPANSION AND CONTRACTION JOINTS AS POSSIBLE WITHOUT DISTURBING THEM BUT SHALL NOT BE DUMPED ONTO A JOINT ASSEMBLY.

14. THE CONTRACTOR SHALL WITHIN EIGHT WEEKS OF THE NOTICE TO PROCEED PREPARE AND SUBMIT TO THE CHIEF ENGINEER OF HIGHWAY DESIGN DETAILED SHOP DRAWINGS FOR THE ENTIRE PAVEMENT, SHOWING: ALL PROPOSED TRANSVERSE AND LONGITUDINAL CONSTRUCTION, EXPANSION AND CONTRACTION JOINTS; PROPOSED CURB JOINTS; THE PROPOSED METHOD OF JOINT FORMING; THE PROPOSED METHOD OF DOWEL SUPPORT; AND THE PROPOSED SEALANT METHOD FOR THE PRIOR APPROVAL OF THE ENGINEER.

15. SAWING OF THE JOINTS SHALL BEGIN AS SOON AS THE CONCRETE HAS HARDENED SUFFICIENTLY TO PERMIT SAWING WITHOUT EXCESSIVE RAVELING. ALL JOINTS SHALL BE SAWED BEFORE UNCONTROLLED SHRINKAGE CRACKING OCCURS. IF NECESSARY, THE SAWING OPERATIONS SHALL BE CARRIED ON BOTH DAY AND NIGHT, REGARDLESS OF WEATHER CONDITIONS. A STANDBY SAW SHALL BE AVAILABLE IN THE EVENT OF BREAKDOWN.

16. THE SAWING OF ANY JOINT SHALL BE OMITTED IF A CRACK OCCURS AT OR NEAR THE JOINT LOCATION BEFORE THE TIME OF SAWING. SAWING SHALL BE DISCONTINUED IF A CRACK DEVELOPS AHEAD OF THE SAW. IN GENERAL, ALL JOINTS SHALL BE SAWED IN SEQUENCE. ALL CONTRACTION JOINTS IN LANES ADJACENT TO PREVIOUSLY CONSTRUCTED LANES SHALL BE SAWED BEFORE UNCONTROLLED CRACKING OCCURS. IF EXTREME CONDITIONS MAKE IT IMPRACTICABLE TO PREVENT ERRATIC CRACKING BY EARLY SAWING, THE CONTRACTION JOINT GROOVE SHALL BE FORMED BEFORE INITIAL SET OF THE CONCRETE BY APPROVED METHODS.

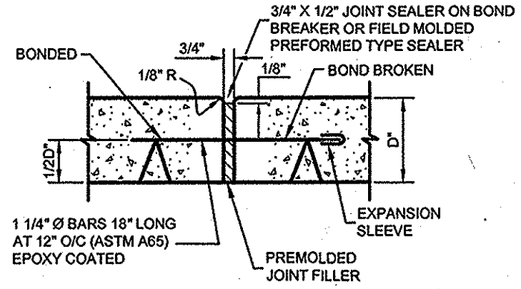

DETAIL OF EXPANSION JOINT
NOT TO SCALE

NOTE:
METAL REINFORCEMENT IS NOT SHOWN ON JOINT DETAILS.

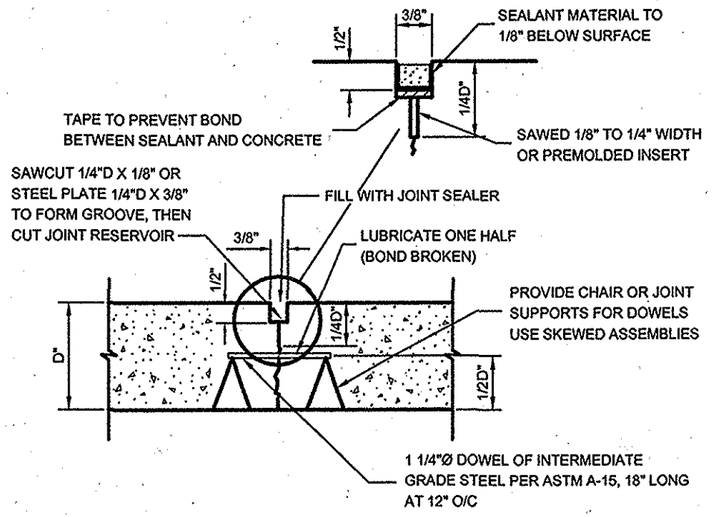

TYPICAL SECTION FOR TRANSVERSE CONTRACTION JOINTS
NOT TO SCALE

NOTES: (APPLY TO ALL JOINTS)

1. THE JOINTS CAN BE COMPLETELY FILLED WITH SEALANT MATERIAL OR PREMOLDED JOINT FILLER CAN BE INSERTED IN THE JOINT FIRST TO REDUCE THE AMOUNT OF SEALANT REQUIRED.
2. SEALER TO BE POURED TO WITHIN 1/8" OF TOP OF PAVEMENT.
3. PRIOR TO SEALING, JOINT SURFACES MUST BE CLEANED AND FREE OF CURING COMPOUND, RESIDUE, LAITANCE AND ANY OTHER FOREIGN MATERIAL.
4. THE SURFACE SHOULD BE DRY WHEN THE SEALANT IS POURED.

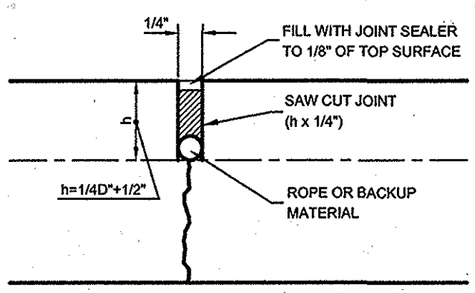

SAWED LANE JOINT
NOT TO SCALE

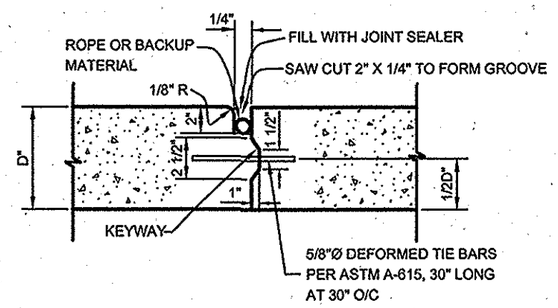

TYPICAL SECTION FOR TRANSVERSE AND LONGITUDINAL CONSTRUCTION JOINTS
NOT TO SCALE

NOTE:

TRANSVERSE CONSTRUCTION JOINTS ARE NECESSARY FOR PLANNED INTERRUPTIONS, AND WHERE EMERGENCY INTERRUPTIONS SUSPEND OPERATIONS FOR 30 MINUTES OR MORE.

REVISION NO.	DESCRIPTION	DATE	APPROVED

NEW YORK CITY DOT

New York City
Department of Transportation

REINFORCED CONCRETE PAVEMENT CONSTRUCTION DETAILS

Approved:
Chief Engineer
Department of Transportation

Approved:
Associate Commissioner
Infrastructure/Design
Department of Design + Construction

Date Issued: 7/1/10

Scale: None

Drawing # H-1050-2

CHECKED BY: MT

HWS-H1050-2

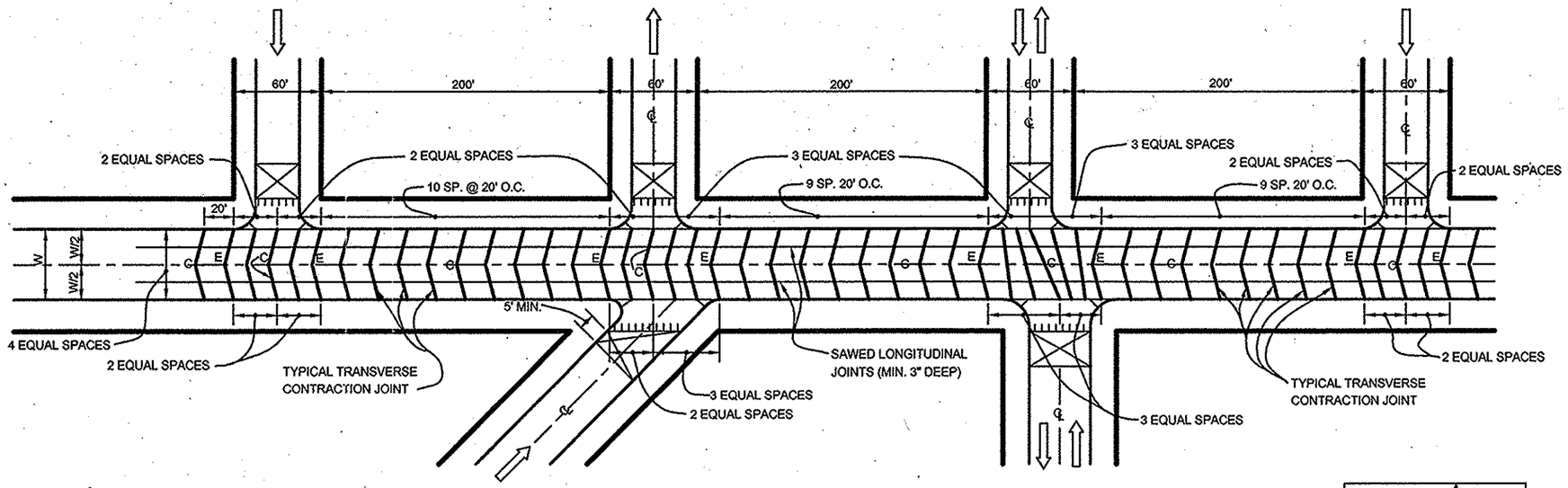

TYPICAL JOINT LAYOUT

(SEE GENERAL NOTE #14)

TRANSVERSE JOINT NOTES

1. CONTRACTION JOINTS SHALL BE PROVIDED IN THE NEW PAVEMENT BY SAWING THE HARDENED SLAB OR BY PLACING AN INSERT OR GROOVE IN THE SLAB SURFACE WHILE THE CONCRETE IS PLASTIC.
2. TRANSVERSE CONTRACTION JOINTS SHALL BE SKEWED JOINTS WITH A MAXIMUM SPACING OF 20 FEET AND A MINIMUM SPACING OF 15 FEET.
3. TRANSVERSE JOINTS SHALL BE ALIGNED TO COINCIDE WITH THE JOINTS IN THE ADJACENT CURBS WHERE PRACTICAL.
4. TRANSVERSE JOINTS ARE TO BE SAWED TO A DEPTH OF 1/4D". ALL JOINTS ARE TO BE SAWED IN SUCCESSION AND SHOULD BE SAWED WHILE THE PAVEMENT IS UNDER COMPRESSION TO PREVENT THE SLAB FROM CRACKING AHEAD OF THE SAW.
5. WHEN A WIDER JOINT-SEALANT RESERVOIR IS REQUIRED THE RESERVOIR MAY BE SAWED SIMULTANEOUSLY WITH THE INITIAL SAW CUT BY PLACING BLADES OF DIFFERENT SIZES ON THE MANDREL.
6. PRIOR TO SEALING, THE JOINT SURFACES MUST BE CLEAN AND FREE OF CURING COMPOUND RESIDUE, LAITANCE, AND ANY OTHER FOREIGN MATERIAL.
7. FIELD MOLDED SEALANTS MEETING AASHTO M173 AND/OR ASTM D1190 OR ASTM D1850 OR AN APPROVED EQUAL ARE TO BE PLACED AS PER MANUFACTURER'S RECOMMENDATIONS.
8. THE SURFACES MUST BE DRY WHEN THE SEALANT IS PLACED AND THE JOINTS ARE TO BE FILLED TO 1/8" BELOW FLUSH WITH THE PAVEMENT SURFACE ±1/16 INCH.
9. IF THE CONTRACTOR ELECTS TO USE PREFORMED SEALANTS THEY ARE TO MEET THE SPECIFICATIONS FOR AASHTO M220 AND/OR ASTM D2628. THE SHAPE FACTOR FOR THE JOINT SEALANT RESERVOIRS AS SHOWN ON THE PLANS ARE TO BE REVISED AS PER RECOMMENDATIONS OF THE MANUFACTURER OR SUPPLIER.
10. IF AN EMERGENCY CONSTRUCTION JOINT OCCURS AT OR NEAR THE LOCATION OF A PLANNED CONTRACTION JOINT, A BUTT-TYPE JOINT WITH DOWEL BARS IS TO BE USED. IF SAID JOINT OCCURS IN THE MIDDLE THIRD OF THE NORMAL JOINT INTERVAL, A KEYED JOINT WITH TIE BARS IS TO BE USED.
11. TRANSVERSE CONSTRUCTION JOINTS FALLING AT PLANNED LOCATIONS FOR CONTRACTION OR EXPANSION JOINTS ARE TO BE BUILT AND SEALED TO CONFORM WITH THE SPECIFICATIONS FOR THOSE JOINTS.

LONGITUDINAL JOINT NOTES

1. LANE JOINTS ARE TO BE SAWED JOINTS (1/4" WIDE X 1/4D+1/2"). TIE BARS WILL NOT BE REQUIRED BUT A SEALANT RESERVOIR SIMILAR TO THOSE USED FOR THE TRANSVERSE CONTRACTION JOINTS MUST BE INSTALLED.
2. THE CENTER LINE JOINT IS TO BE A KEYED CONSTRUCTION JOINT WITH TIE BARS SPACED AS SHOWN ON THE PLANS AND SET PERPENDICULAR TO THE CENTER LINE AND PARALLEL TO THE TOP OF THE SLAB.
3. TIE BARS SHALL BE RIGIDLY SECURED BY CHAIRS OR OTHER APPROVED SUPPORTS TO PREVENT DISPLACEMENT.
4. TIE BARS SHALL NOT BE COATED WITH ANY MATERIALS DELETERIOUS TO BOND.
5. LONGITUDINAL JOINTS SHALL BE AT LEAST 1/4D+1/2" AND 1/4" WIDE.
6. AFTER SAWING, THE JOINTS ARE TO BE FLUSHED OUT, DRIED AND SEALED TO ELIMINATE A SECOND CLEANING.
7. THE SAWED GROOVE CAN BE COMPLETELY FILLED WITH SEALANT MATERIAL OR A ROPE, CORD OR OTHER APPROVED MATERIAL CAN BE INSERTED IN THE GROOVE FIRST TO REDUCE THE AMUONT OF SEALANT REQUIRED.
8. JOINTS ARE TO BE FILLED TO 1/8" BELOW FLUSH WITH THE PAVEMENT SURFACE ±1/16 INCH.
9. NOTES 6, 7, 8, AND 9 UNDER TRANSVERSE JOINTS APPLY TO LONGITUDINAL JOINTS ALSO.

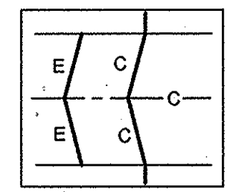

E=EXPANSION JOINT
C=CONSTRUCTION JOINT

KEY

NOTE:

FOR ADDITIONAL NOTES SEE SHEETS 1 AND 2.

REVISION NO.	DESCRIPTION	DATE	APPROVED

NEW YORK CITY DOT

New York City
Department of Transportation

REINFORCED CONCRETE PAVEMENT
CONSTRUCTION DETAILS

Approved:
Chief Engineer
Department of Transportation

Approved:
Associate Commissioner
Infrastructure/Design
Department of Design + Construction

Date Issued: 7/1/10

Scale: None

Drawing # H-1050-3

CHECKED BY: MZ

HWS-H1050-3

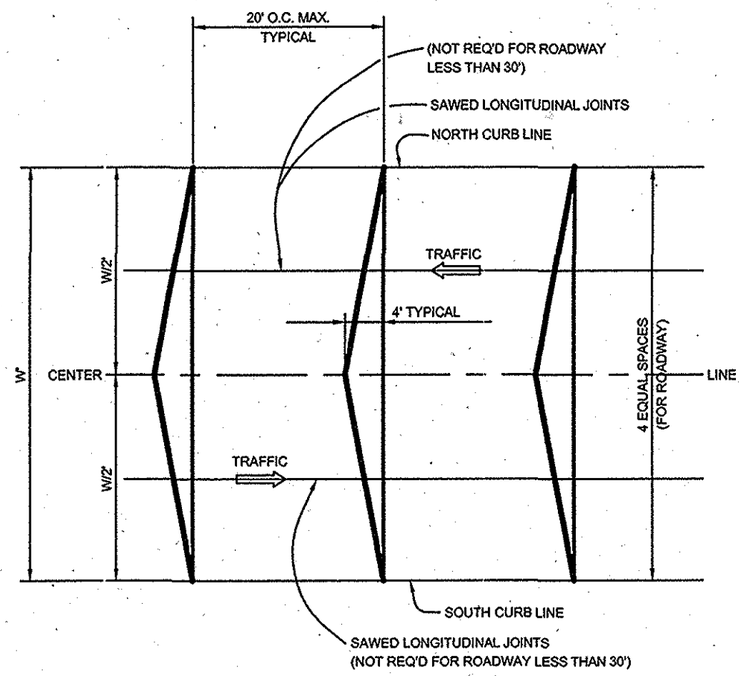

TYPICAL TRANSVERSE JOINT DETAIL

NOT TO SCALE

CASE I
JOINT, IF CONTINUED, WILL PASS THRU THE MANHOLE BUT NOT THRU THE CENTER.

CASE II
JOINT, IF CONTINUED, WILL PASS WITHIN 1'-0" OF MANHOLE RIM.

CASE III
JOINT CLEARS THE MANHOLE RIM BY 1'-0" OR MORE.

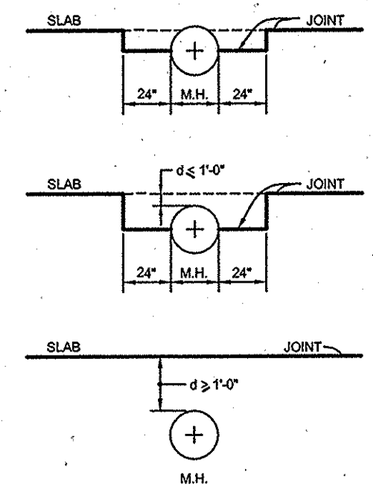

DETAILS FOR SLAB JOINT/MANHOLE ARRANGEMENTS

NOT TO SCALE

PAVEMENT LIMITS

1. THE LIMITS OF CONCRETE PAVEMENT IN THE INTERSECTING STREETS SHALL BE APPROXIMATELY AT THE BUILDING LINE ALONG ROADWAY. PLACED SO AS NOT TO INTERSECT ANY STREET HARDWARE.
2. ADJUSTMENT AREAS SHALL BE AS DIRECTED BY THE ENGINEER. (5' TO 15') AND SHALL NOT INTERSECT ANY STREET HARDWARE.

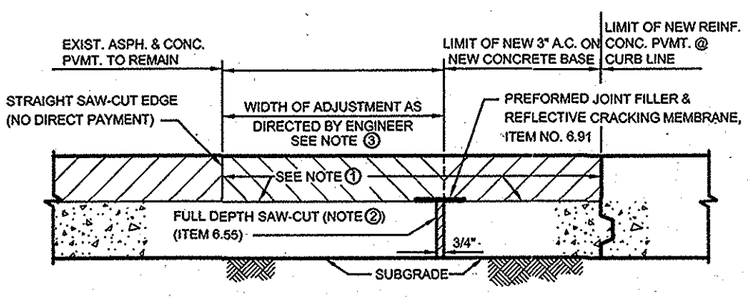

NOTES - SAWCUT

① APPLY ASPHALT TACK COAT TO ALL SURFACES.

② PAYMENT WILL BE MADE FOR NUMBER OF LINEAR FEET OF SAW-CUTTING AS ORDERED BY ENGINEER.

③ EXISTING ASPHALT TO BE REMOVED UNDER OTHER ITEMS AND THE ADJUSTMENT AREA RESTORED WITH NEW 3" A.C.W.C. ON NEW BINDER MIXTURE AS REQUIRED TO MATCH THE EXISTING ASPHALT PAVEMENT.

DETAIL OF SAW CUT AT END OF NEW PAVEMENT

NOT TO SCALE

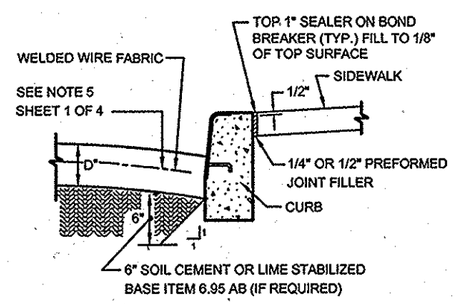

DETAIL AT THE JUNCTION OF PAVEMENT AND CURB

NOT TO SCALE

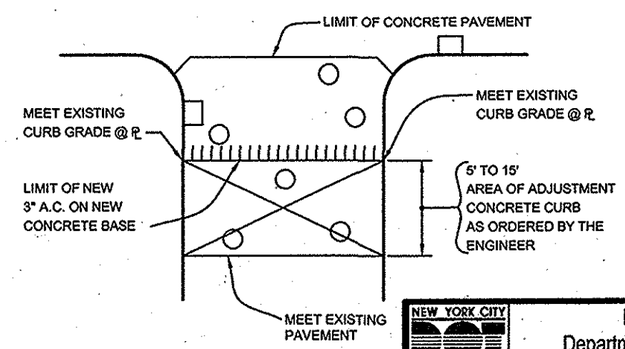

REVISION NO.	DESCRIPTION	DATE	APPROVED

NEW YORK CITY DOT

New York City
Department of Transportation

REINFORCED CONCRETE PAVEMENT CONSTRUCTION DETAILS

Approved:
Chief Engineer
Department of Transportation

Approved:
Associate Commissioner
Infrastructure/Design
Department of Design + Construction

Date Issued: 7/1/10

Scale: None

Drawing # H-1050-4

CHECKED BY: MZ

HWS-H1050-4

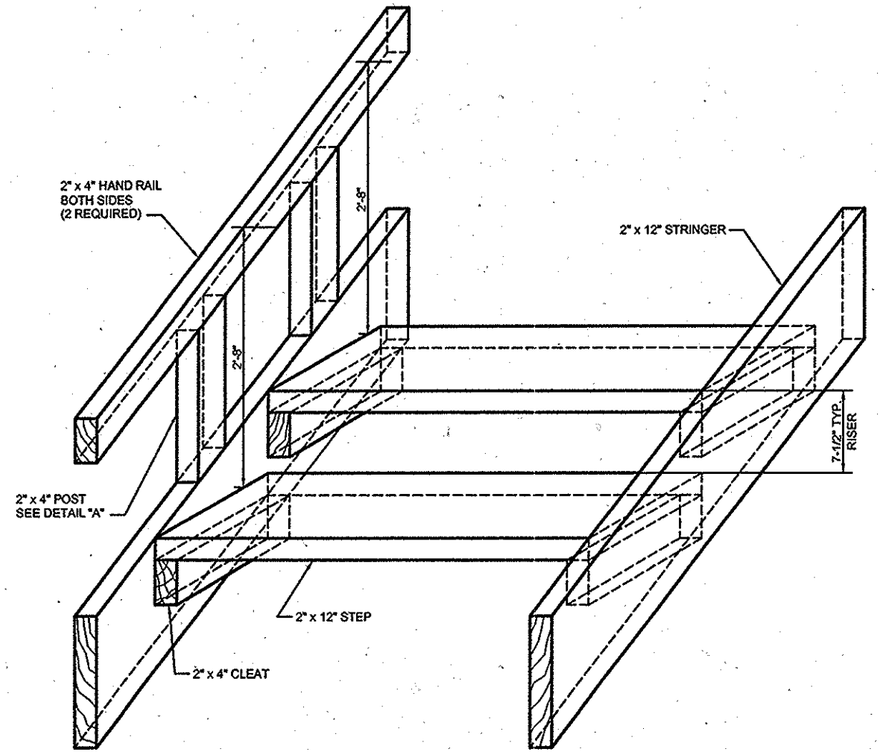

OBLIQUE VIEW
N.T.S.

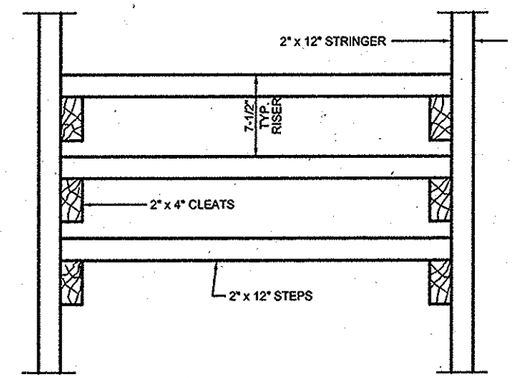

FRONT VIEW
N.T.S.

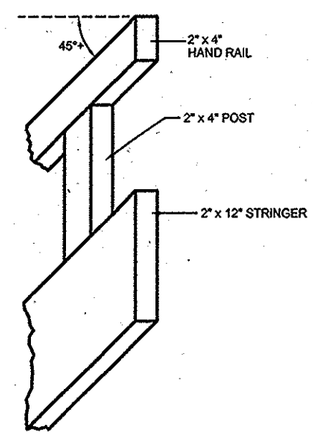

DETAIL "A"
N.T.S.

NOTES:

1. ALL MATERIAL AND CONSTRUCTION METHODS USED ARE TO CONFORM TO SECTION # 7.15 OF THE NYC DEPARTMENT OF TRANSPORTATION STANDARD HIGHWAY SPECIFICATIONS.
2. ALL FASTENERS SHALL BE GALVANIZED INDUSTRIAL STANDARD.
3. 2'-8" DIMENSION IS FROM FRONT OF STEP TO TOP OF POST.
4. TOP OF RAIL TO BE PLANE SMOOTH.

REVISION NO.	DESCRIPTION	DATE	APPROVED

NEW YORK CITY DOT

New York City
Department of Transportation

TEMPORARY WOODEN STEPS

Approved:
Chief Engineer
Department of Transportation

Approved:
Associate Commissioner
Infrastructure/Design
Department of Design + Construction

Date Issued: 7/1/10

Scale: None

Drawing # H-1051

CHECKED BY: MZ

NWS-H1051

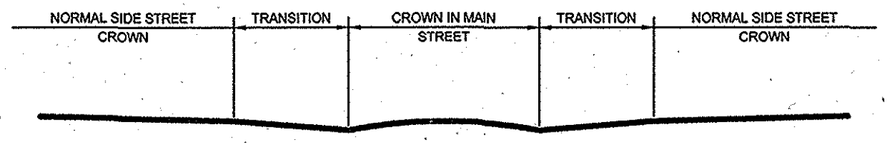

PROFILE ALONG CENTER LINE OF
INTERSECTING ROADWAY

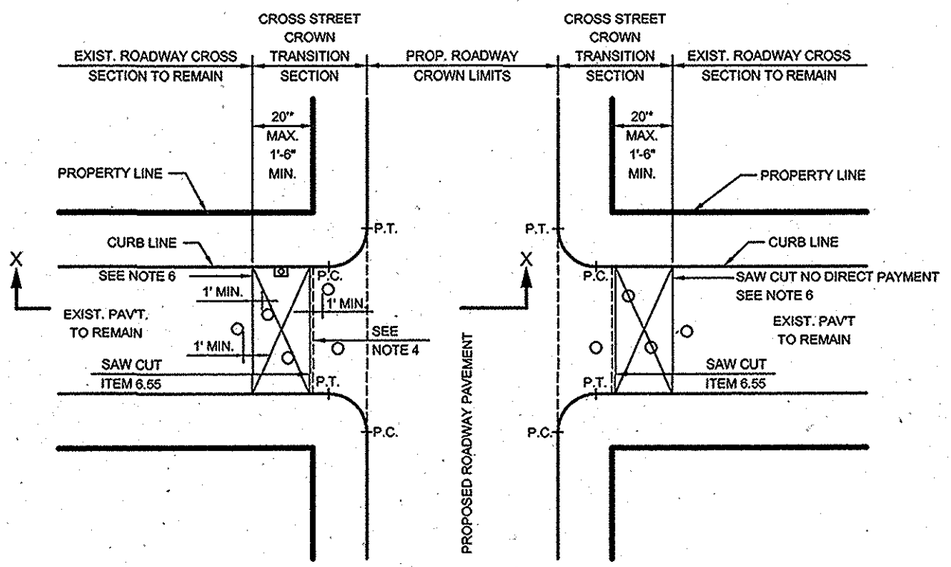

PLAN
N.T.S.

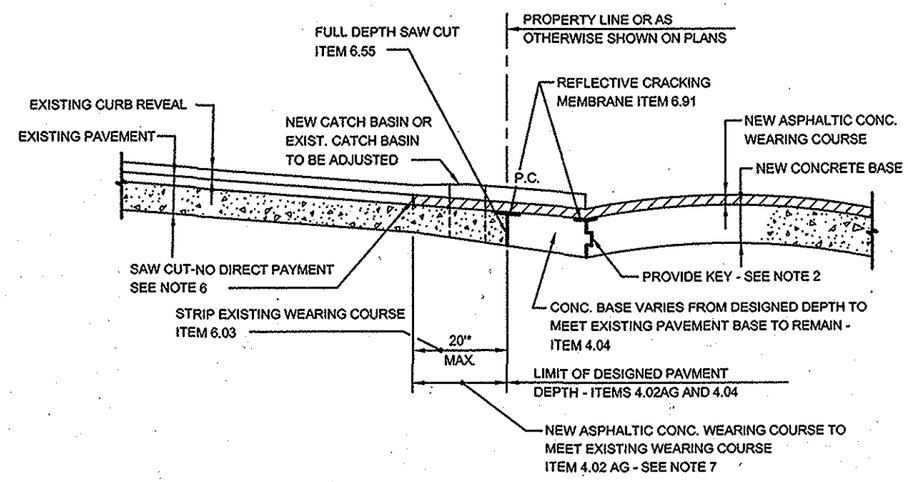

SECTION X-X
N.T.S.

NOTES:

*1. 20' MAXIMUM UNLESS OTHERWISE SPECIFIED.

2. CONCRETE BASE FOR AREA OF ADJUSTMENT AND NEW ROADWAY PAVEMENT BASE TO BE KEYED TOGETHER.

3. CROWN OF MAJOR ROADWAY TO BE MAINTAINED. TRANSITION CROWN OF SIDE STREET TO MEET MAIN STREET GUTTER LINE. (MAIN STREET WATER FLOW ACROSS SIDE STREET TO BE MAINTAINED).

4. CONCRETE PAVEMENT EDGE TO BE MIN. OF 1'-0" FROM EDGE OF STREET HARDWARE.

5. ASPHALT CONCRETE FOR AREA OF ADJUSTMENT AND NEW ROADWAY PAVEMENT TO BE PLACED MONOLITHICALLY UNLESS OTHERWISE ORDERED BY THE ENGINEER.

6. TACK COAT (SECTION 6.58) ALL EDGES.

7. ADDITIONAL THICKNESS GREATER THAN 3" A.C.W.C. WILL BE PAID FOR UNDER ASPH. CONC. MIXTURE (ITEM 4.02 CB) OR BINDER MIXTURE (ITEM 4.02 CA).

CHECKED BY: MG

HWS-H1053

REVISION NO.	DESCRIPTION	DATE	APPROVED

NEW YORK CITY DOT

New York City
Department of Transportation

DETAILS FOR CONSTRUCTING AREAS OF ADJUSTMENT AND TRANSITION SECTIONS

Approved:
Chief Engineer
Department of Transportation

Approved:
Associate Commissioner
Infrastructure/Design
Department of Design + Construction

Date Issued: 7/1/10

Scale: None

Drawing # H-1053

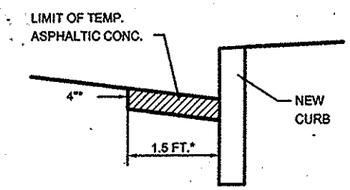

IN ROADWAY AREA
ADJACENT TO ALL NEW
CURB INCLUDING CORNERS

* 3" THICK AND 2.5 FT. WIDE IN TEMPORARY PEDESTRIAN RAMPS AT CORNERS AFTER NEW CONCRETE BASE IS PLACED. (RAMP SIMILAR TO DETAIL 5)

1

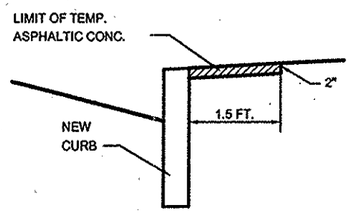

IN FULL WIDTH SIDEWALK AREA
ADJACENT TO ALL NEW
CURB EXCEPT AT CORNERS

BACKFILL WITH SOIL IN STRIP SIDEWALK AREA (NO DIRECT PAYMENT)

2

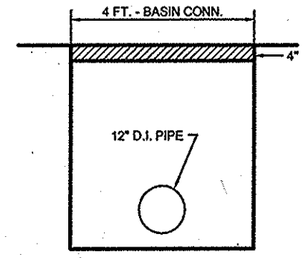

IN ROADWAY AREA, OVER
12" D.I. PIPE CONNECTION

3

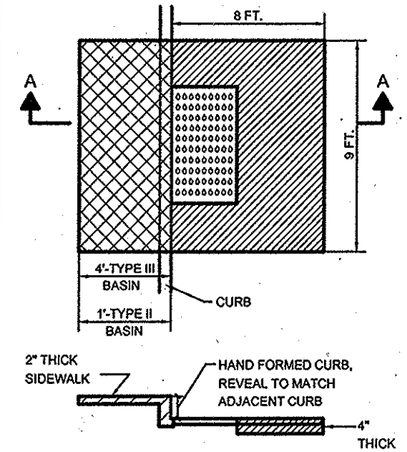

SECTION A-A

4" THICK IN ROADWAY AREA AROUND ALL NEW CATCH BASINS AND AT ABANDONED BASIN LOCATIONS.

4

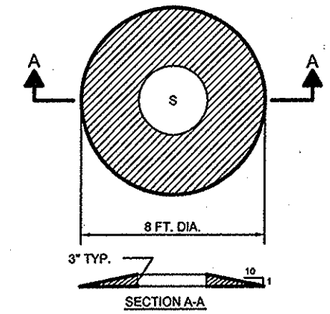

IN ROADWAY AREA AROUND
EVERY NEW OR MODIFIED
MANHOLE

5

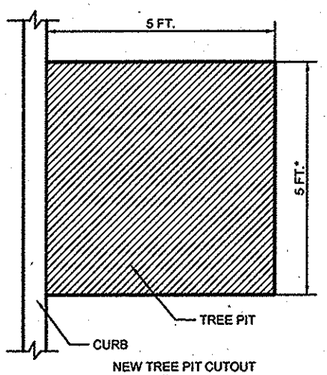

NEW TREE PIT CUTOUT
(FULL WIDTH SIDEWALK ONLY)
* OR FULL LENGTH OF EXTENDED TREE PIT.

6

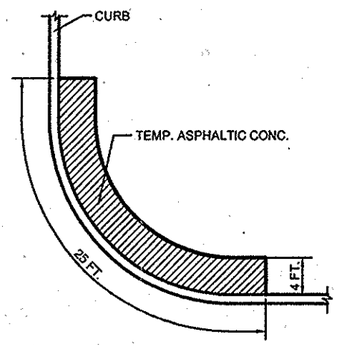

2" THICK IN SIDEWALK AREA
ADJACENT TO THE CURB AT
ALL CORNERS

7

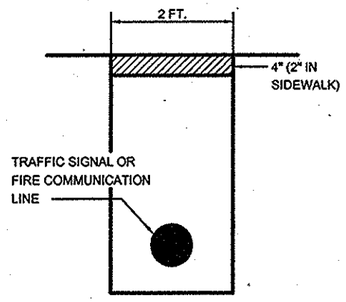

IN ROADWAY OVER NEW
TRAFFIC SIGNAL OR FIRE
COMMUNICATION LINE
TRENCHES

8

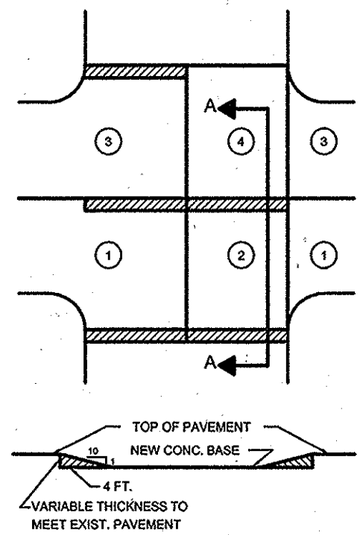

SECTION A-A

WHEN AREA (3)
IS UNDER CONSTRUCTION

9

NOTES:

1. PAYMENT FOR FURNISHING, DELIVERING, PLACING, AND REMOVAL OF TEMPORARY RESTORATION OF PAVEMENT SHALL BE MADE UNDER ITEM NO. 4.02 CB. TYPICAL LIMITS OF PAYMENT FOR TEMPORARY PAVEMENT RESTORATION, USING ITEM NO. 4.02 CB, ARE SHOWN ABOVE. NO ADDITIONAL PAYMENT FOR ITEM 4.02 CB, WILL BE MADE BEYOND THE LIMITS SHOWN ABOVE, UNLESS OTHERWISE DIRECTED BY THE ENGINEER TO MAKE THE WORK SITE SAFE OR AS SPECIFIED UNDER NOTE 2, BELOW.

2. TEMPORARY PAVEMENT FOR TRENCH RESTORATIONS SHALL BE DONE IN ACCORDING TO THE REQUIREMENTS OF SECTION 4.08 IN BOTH THE NYCDEP STANDARD SEWER SPECIFICATIONS AND THE NYCDEP STANDARD WATER MAIN SPECIFICATIONS, DATED AUGUST 1, 2009, AND PAID FOR UNDER ITEM NO. 4.02 CB.

3. UNLESS OTHERWISE SHOWN ON PLAN OR DIRECTED BY THE ENGINEER, ASPHALTIC CONCRETE MIXTURE PLACED FOR TEMPORARY RESTORATION OF PAVEMENT SHALL HAVE A THICKNESS OF 4" IN THE ROADWAY PAVED AREAS AND A THICKNESS OF 2" IN THE SIDEWALK PAVED AREAS.

CHECKED BY: MT

REVISION NO.	DESCRIPTION	DATE	APPROVED

NEW YORK CITY DOT

New York City
Department of Transportation

LIMITS OF
MEASUREMENT FOR PAYMENT OF TEMPORARY
ASPHALT PAVEMENT

Approved:
Chief Engineer
Department of Transportation

Approved:
Associate Commissioner
Infrastructure/Design
Department of Design + Construction

Date Issued: 7/1/10

Scale: None

Drawing # H-1054

HWS-H1054

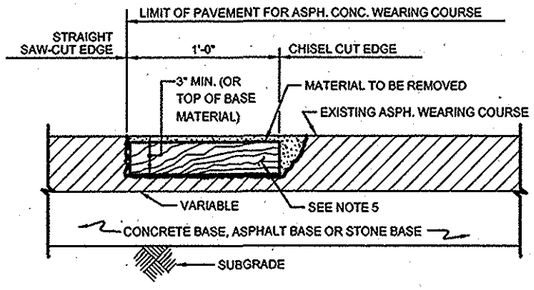

PAVEMENT KEY-TYPE A

ITEM 6.51A
N.T.S.

NOTES:

1. THICKNESS OF ASPHALTIC CONCRETE WEARING COURSE OVER SAW-CUT EDGE SHALL BE ZERO INCHES.
2. THICKNESS OF ASPHALTIC CONCRETE WEARING COURSE OVER CHISEL-CUT EDGE SHALL BE A MINIMUM OF ONE INCH.
3. MATERIAL USED TO FILL WITHIN LIMITS OF PAVEMENT KEY TYPE A SHALL BE PAID FOR UNDER ITEM 6.51A TYPE A KEY.
4. PAYMENT FOR FEATHERED ASPHALTIC CONCRETE WEARING COURSE ITEMS OVER PAVEMENT KEY. TYPE A SHALL BE FOR FULL THICKNESS OF ASPHALTIC CONCRETE WEARING COURSE AS ORDERED BY THE ENGINEER.
5. 2"x12" PLANK TO BE PLACED IN KEY WHEN STREET IS OPENED TO TRAFFIC. PLANK TO BE REMOVED PRIOR TO PAVING.

LEGEND:
- - - - PAVEMENT KEY

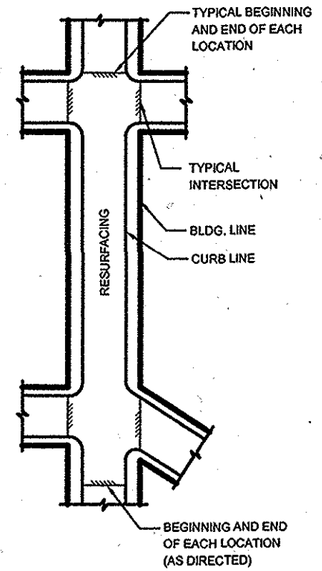

PLAN
TYPICAL LOCATION

N.T.S.

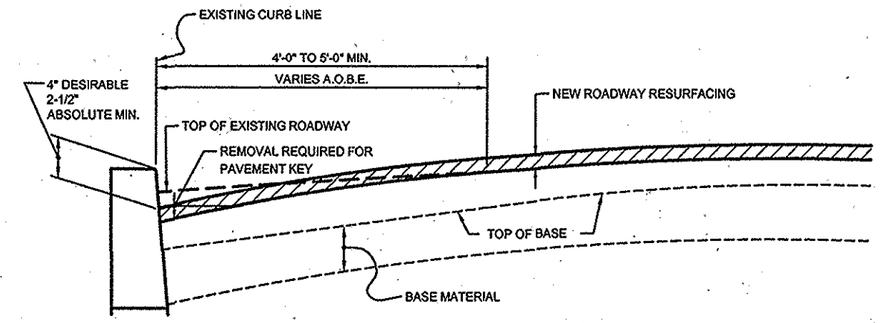

PAVEMENT KEY - TYPE B-1

ITEM 6.51 B-1
N.T.S.

NOTES:

1. WHERE THERE IS NO CONCRETE BASE, OR WHERE IT IS NECESSARY TO REMOVE CONCRETE BASE SUBSEQUENT TO INSTALLING TYPE "B" PAVEMENT KEY, PAYMENT FOR DEPTHS GREATER THAN 3" WILL BE MADE UNDER ITEM 6.02AA, UNCLASSIFIED EXCAVATION.
2. CONTRACTOR MAY AT HIS OPTION, EITHER STRIP OR GRIND THE AREA TO THE REQUIRED DEPTH. IF THE CONTRACTOR CHOOSES TO STRIP THERE WILL BE NO ADDITIONAL PAYMENT FOR OVER-CUTTING OR ADDITIONAL BINDER.
3. THIS ITEM WHEN ORDERED BY THE ENGINEER WILL BE USED TO ELIMINATE HIGH POINTS IN THE EXISTING PAVEMENT PRIOR TO RESURFACING.
4. (A.O.B.E.) AS ORDERED BY ENGINEER.

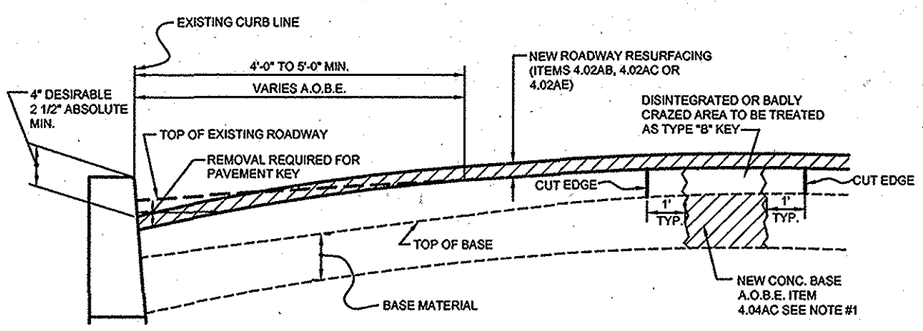

PAVEMENT KEY - TYPE B-2

ITEM 6.51 B-2
N.T.S.

NOTES:

1. WHERE THERE IS NO CONCRETE BASE, OR WHERE IT IS NECESSARY TO REMOVE CONCRETE BASE SUBSEQUENT TO INSTALLING TYPE "B" PAVEMENT KEY, PAYMENT FOR DEPTHS GREATER THAN 3" WILL BE MADE UNDER THE UNCLASSIFIED EXCAVATION ITEM.
2. THE CONTRACTOR IS TO GRIND THE AREAS TO THE REQUIRED DEPTH USING AN ACCEPTABLE GRINDING METHOD.
3. THIS ITEM WHEN ORDERED BY THE ENGINEER WILL BE USED TO ELIMINATE HIGH POINTS IN THE EXISTING PAVEMENT PRIOR TO RESURFACING.
4. (A.O.B.E.) AS ORDERED BY ENGINEER.

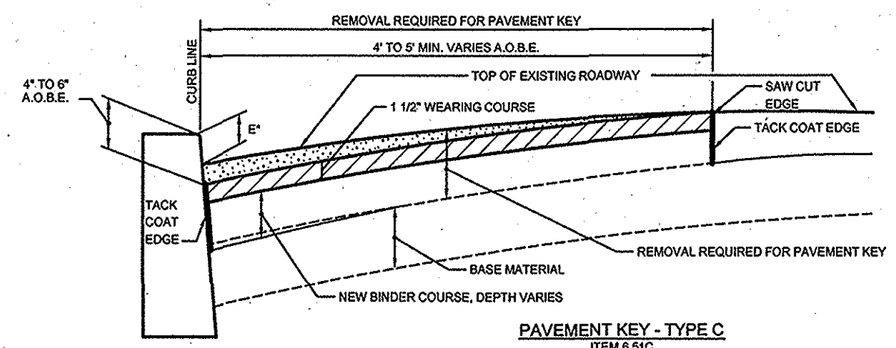

PAVEMENT KEY - TYPE C

ITEM 6.51C
N.T.S.

NOTES:

1. IF THE EXISTING CURB REVEAL E* IS GREATER THAN 2-1/2" THIS PAVEMENT KEY WILL NOT BE REQUIRED.
2. PAYMENT FOR THIS ITEM SHALL BE THE NUMBER OF TONS OF BOTH THE WEARING COURSE AND BINDER MIXTURE INCORPORATED INTO THE WORK. PAYMENT SHALL INCLUDE, SAW CUTTING, EXCAVATION (INCLUDING CONCRETE BASE REMOVAL IF REQUIRED), TACK COATING AND PLACING OF THE NEW BINDER MIXTURE AND 1 1/2" WEARING COURSE.
3. (A.O.B.E.) AS ORDERED BY THE ENGINEER.
4. THE CONTRACTOR MAY AT HIS OPTION, EITHER STRIP, EXCAVATE OR GRIND THE AREA TO THE REQUIRED DEPTH.

REVISION NO.	DESCRIPTION	DATE	APPROVED

NEW YORK CITY DOT

New York City
Department of Transportation

PAVEMENT KEY
TYPE A, B-1, B-2, C

Approved:
Chief Engineer
Department of Transportation

Approved:
Associate Commissioner
Infrastructure/Design
Department of Design + Construction

Date Issued: 7/1/10

Scale: None

Drawing # H-1055

CHECKED BY: MS

HWS-H1055

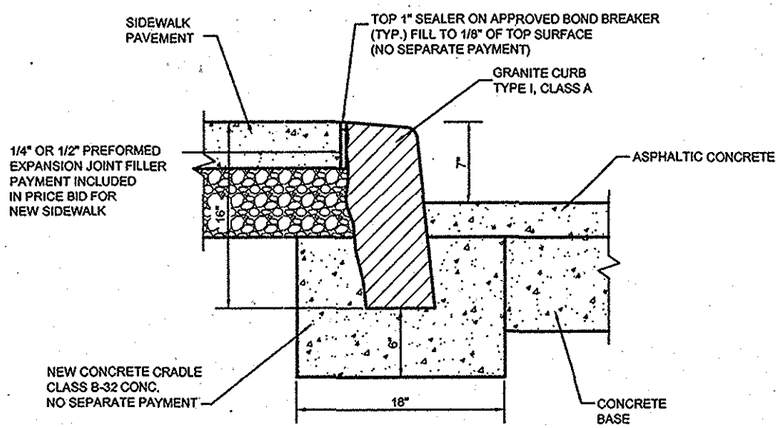

TYPICAL DETAIL OF GRANITE CURB INSTALLATION
N.T.S.

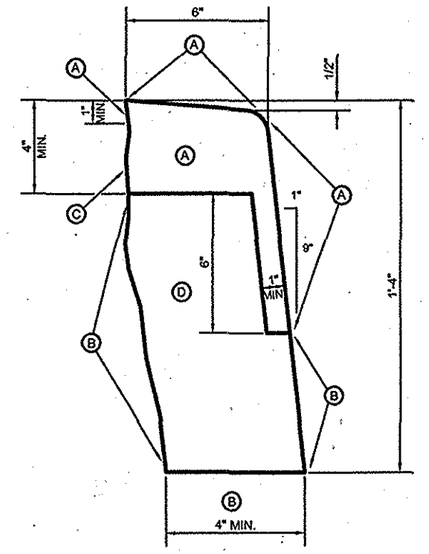

SURFACE FINISH		
SYMBOL	NO PROJECTION OVER	NO DEPRESSION OVER
A	1/8"	1/8"
B	1-1/2"	1-1/2"
C	1/2"	1"
D	0"	1"

NOTES:

A. LENGTHS OF STRAIGHT GRANITE CURB SHALL RANGE FROM 4 FT. TO 12 FT. LONG, 80% OF WHICH SHALL BE 6 FT. OR GREATER,

B. LENGTHS OF CORNER GRANITE CURB SHALL RANGE FROM 3FT. TO 8 FT. LONG, 80% OF WHICH SHALL BE 4 FT. OR GREATER,

C. LENGTH OF TRANSITION CURB (STRAIGHT OR CURVED) AT CORNERS SHALL BE 5 FT. LONG; AND,

D. EXPOSED SURFACES OF THE GRANITE CURB TO BE DRESSED WITH A BUSH HAMMERED OR THERMAL FINISH, WITH NO DRILL HOLES.

NOTE:
GRANITE CURB (SAMPLES OF WHICH SHALL BE FURNISHED TO THE CITY BY THE CONTRACTOR PRIOR TO INSTALLING GRANITE) IS TO BE MEDIUM GRAY IN COLOR AS APPROVED BY THE ENGINEER.

DIMENSIONS AND FINISH ON GRANITE CURB
N.T.S.

REVISION NO.	DESCRIPTION	DATE	APPROVED

NEW YORK CITY DOT

New York City
Department of Transportation

TYPICAL GRANITE CURB

Approved:
Chief Engineer
Department of Transportation

Approved:
Associate Commissioner
Infrastructure/Design
Department of Design + Construction

Date Issued: 7/1/10

Scale: None

Drawing # H-1056

CHECKED BY: MT

HWS-H1056

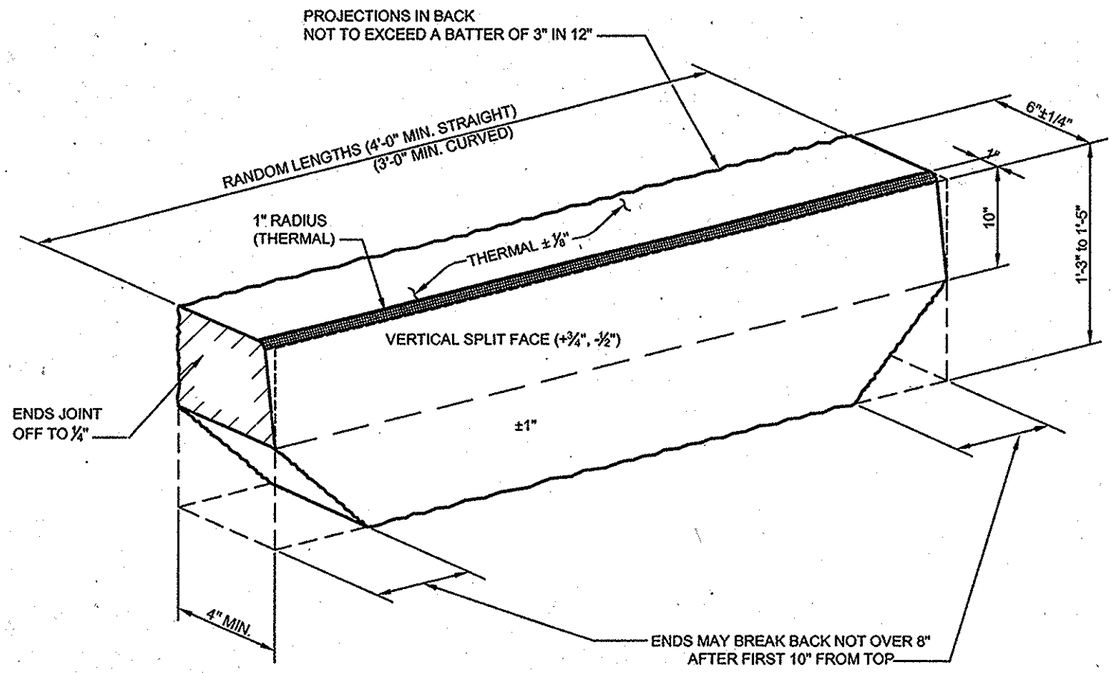

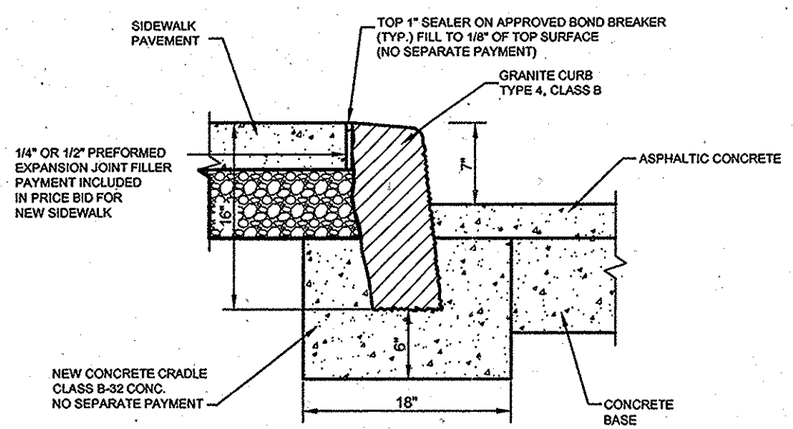

TYPICAL DETAIL OF NY HISTORICAL
GRANITE CURB INSTALLATION
N.T.S.

CHECKED BY: MZ

HWS-H1056A

REVISION NO.	DESCRIPTION	DATE	APPROVED

NEW YORK CITY DOT

New York City
Department of Transportation

HISTORICAL CURB DETAIL

Approved:
Chief Engineer
Department of Transportation

Approved:
Associate Commissioner
Infrastructure/Design
Department of Design + Construction

Date Issued: 7/1/10

Scale: None

Drawing # H-1056A

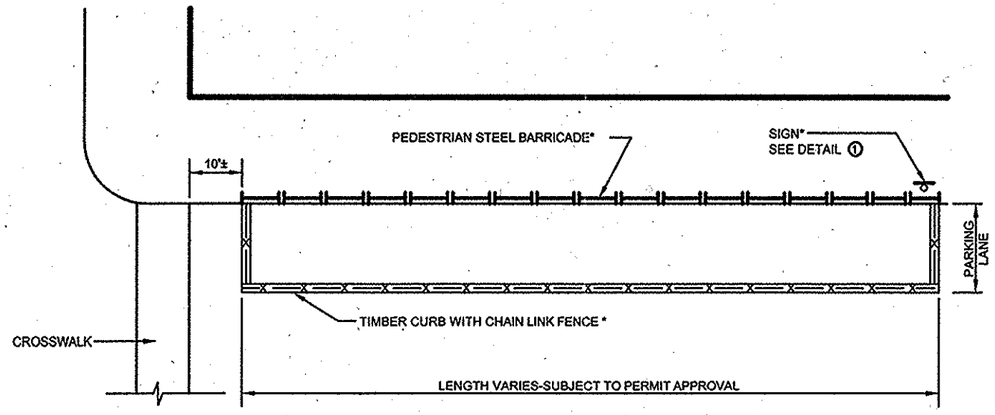

PLAN
N.T.S.

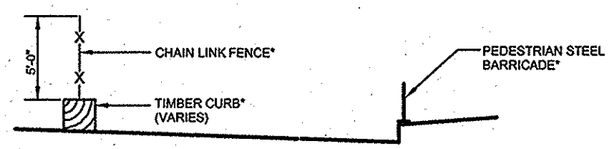

ALTERNATE Ⓐ
SECTION
N.T.S.

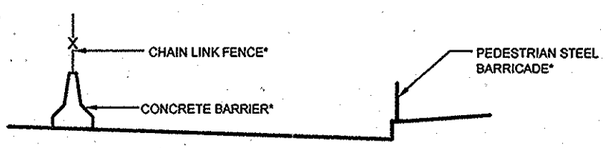

ALTERNATE Ⓑ
SECTION
N.T.S.

TEMPORARY STORAGE AREA
PROJECT NAME
CONTRACTOR'S NAME
FIELD OFFICE ADDRESS
TELEPHONE NO.:

DETAIL ①
INFORMATION SIGN

*NOTES

- NO DIRECT PAYMENTS FOR MAINTENANCE OF TRAFFIC CONTROL DEVICES.
- PROVIDE TAPER AT APPROACH END TO CHANNELIZE TRAFFIC PER NATIONAL MUTCD WITH NYS SUPPLEMENT.

REVISION NO.	DESCRIPTION	DATE	APPROVED

NEW YORK CITY DOT

New York City
Department of Transportation

TEMPORARY
STORAGE AREA

Approved:
Chief Engineer
Department of Transportation

Approved:
Associate Commissioner
Infrastructure/Design
Department of Design + Construction

Date Issued: 7/1/10

Scale: None

Drawing # H-1057

CHECKED BY: MZ

HWS-H1057

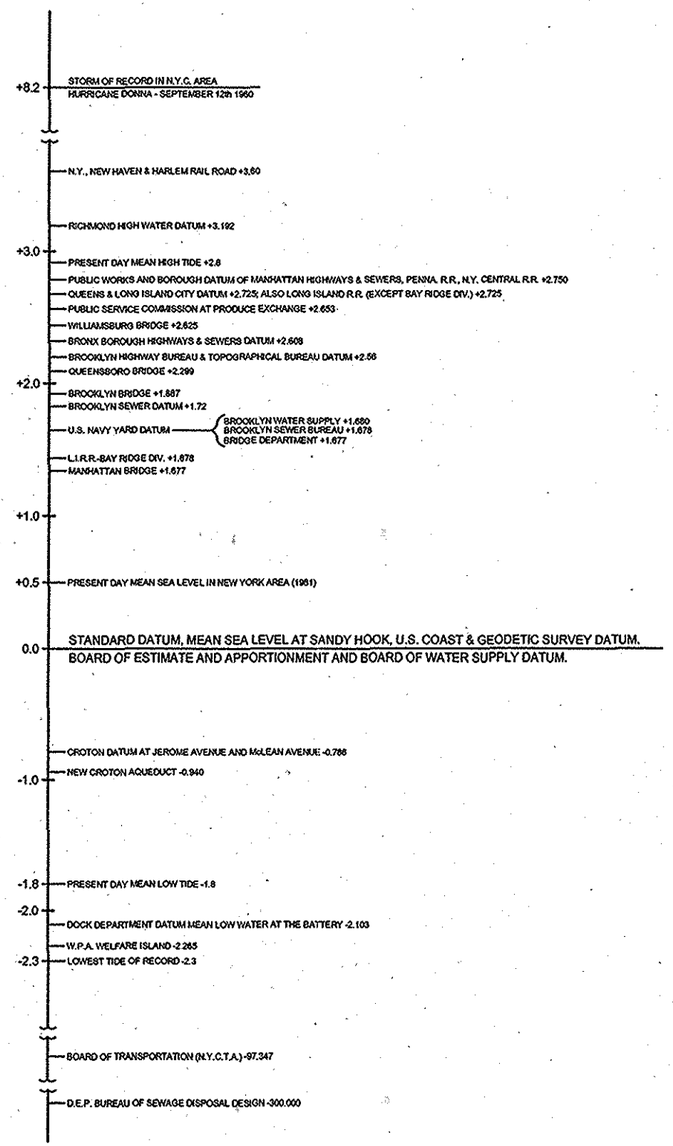

NOT TO SCALE

NOTES:

1. MEAN LOW WATER VARIES FROM -1.5 TO -3.5 U.S. COASTAL AND GEODETIC SURVEY DATUM DEPENDING ON DISTANCE FROM THE OCEAN.
2. MEAN HIGH WATER VARIES FROM +2.0 TO +4.0 U.S. COASTAL AND GEODETIC SURVEY DATUM DEPENDING ON DISTANCE FROM THE OCEAN.
3. UNITS SHOWN ON THIS SHEET ARE IN "FEET".

REVISION NO.	DESCRIPTION	DATE	APPROVED

NEW YORK CITY DOT

New York City
Department of Transportation

NEW YORK CITY
COMPARISON OF DATUM PLANES

Approved:
Chief Engineer
Department of Transportation

Approved:
Associate Commissioner
Infrastructure/Design
Department of Design + Construction

Date Issued: 7/1/10

Scale: None

Drawing # MS-1000

CHECKED BY: MZ

HWS-MS1000

STANDARD DRAWINGS

STEEL FACED CURB, TYPE D	H-1010
SIDEWALK PEDESTRIAN RAMP	H-1011
STEEL FACED DROP CURB (DRIVEWAYS)	H-1015
CONCRETE CURB	H-1044
CONCRETE SIDEWALK	H-1045

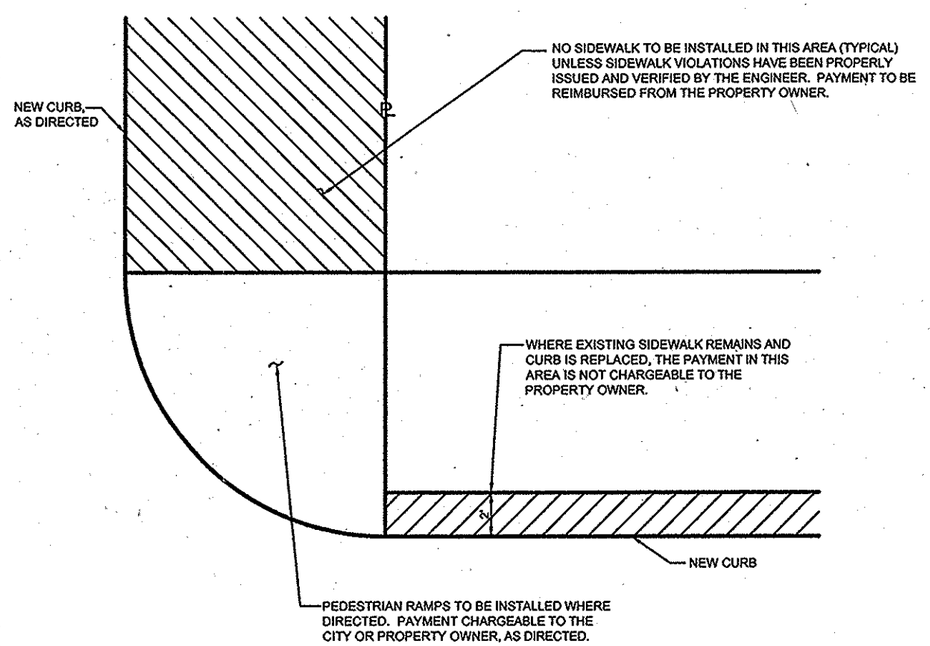

SIDEWALK VIOLATION & PAYMENT
N.T.S.

REVISION NO.	DESCRIPTION	DATE	APPROVED

NEW YORK CITY DOT

New York City
Department of Transportation

SIDEWALK PAVEMENT LIMITS

Approved:
Chief Engineer
Department of Transportation

Approved:
Associate Commissioner
Infrastructure/Design
Department of Design + Construction

Date Issued: 7/1/10

Scale: None

Drawing # MS-1001

CHECKED BY: MG

HWS-MS1001

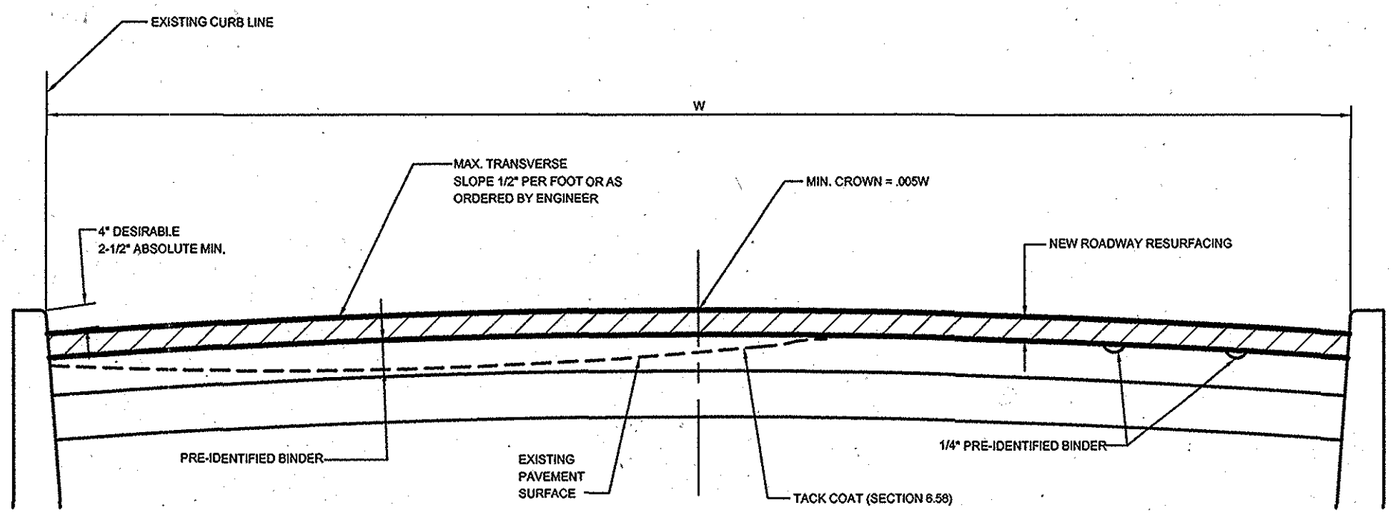

CHECKED BY: MZ

HWS-MS1003

REVISION NO.	DESCRIPTION	DATE	APPROVED

NEW YORK CITY DOT

New York City
Department of Transportation

TYPICAL ROADWAY
CROSS-SECTION/RESURFACING

Approved:
Chief Engineer
Department of Transportation

Approved:
Associate Commissioner
Infrastructure/Design
Department of Design + Construction

Date Issued: 7/1/10

Scale: None

Drawing # MS-1003

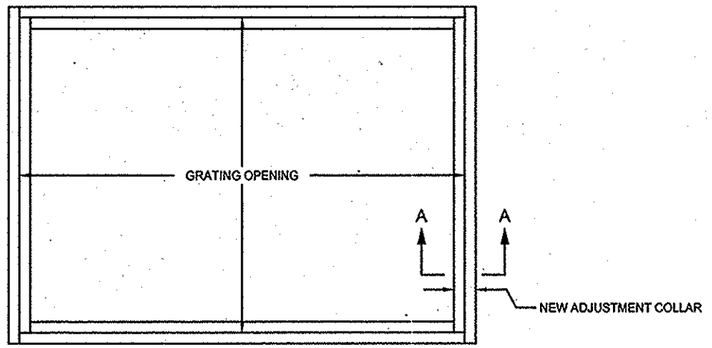

PLAN
N.T.S.

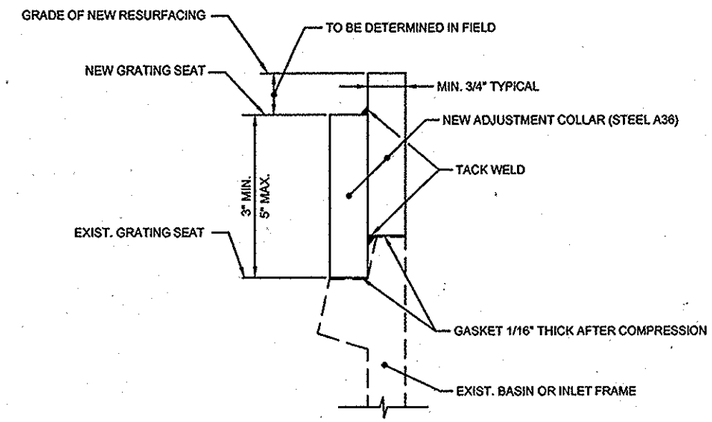

SECTION A-A
N.T.S.

NOTES

1. UPON BEING ORDERED BY THE ENGINEER TO PERFORM THIS REQUIRED ADJUSTMENT, THE CONTRACTOR IS TO FIELD INVESTIGATE EACH LOCATION AND DETERMINE THE HEIGHT REQUIRED TO BRING GRATING TO THE PROPOSED GRADE.
2. THIS METHOD OF ADJUSTMENT MAY BE USED ONLY WHERE AN UPWARD ADJUSTMENT OF 3" TO 5" IS REQUIRED AND WHERE ORDERED BY THE ENGINEER.
3. THE ADJUSTMENT COLLAR WHEN INSTALLED SHALL HAVE NO LATERAL OR VERTICAL MOVEMENT OF ANY KIND.
4. EACH GRATING WHEN SET ON NEW SEAT SHALL BEAR EVENLY SO THAT NO VERTICAL MOVING OR ROCKING OCCURS DURING TRAFFIC.
5. THE CONTRACTOR MAY USE AN APPROVED EQUAL ADJUSTMENT FRAME.
6. NO WORK SHALL PROCEED UNTIL SHOP DRAWINGS HAVE BEEN SUBMITTED AND APPROVED BY THE DEPARTMENT.

REVISION NO.	DESCRIPTION	DATE	APPROVED

NEW YORK CITY DOT

New York City
Department of Transportation

CATCH BASIN
ADJUSTMENT - TYPE 2

Approved:
Chief Engineer
Department of Transportation

Approved:
Associate Commissioner
Infrastructure/Design
Department of Design + Construction

Date Issued: 7/1/10

Scale: None

Drawing # MS-1004

CHECKED BY: MZ

HWS-MS1004

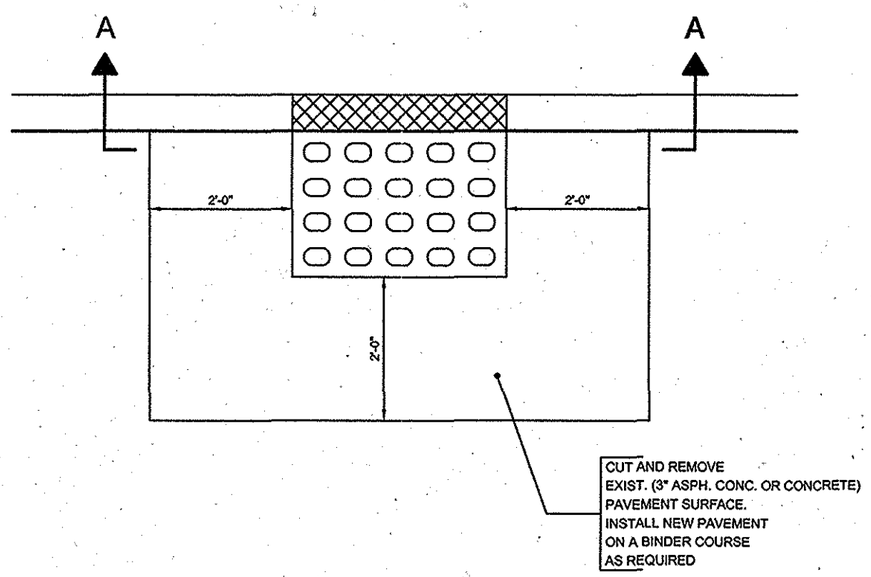

PLAN
N.T.S.

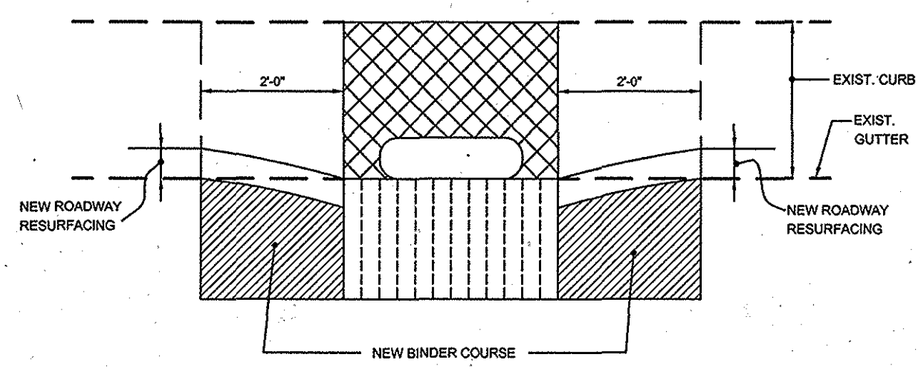

ELEVATION
N.T.S.

SECTION A-A

REVISION NO.	DESCRIPTION	DATE	APPROVED

CHECKED BY: MZ

PWS-MS1005

NEW YORK CITY DOT

New York City
Department of Transportation

ADJUSTMENT AT CATCH BASINS

Approved:
Chief Engineer
Department of Transportation

Approved:
Associate Commissioner
Infrastructure/Design
Department of Design + Construction

Date Issued: 7/1/10

Scale: None

Drawing # MS-1005