THE COUNCIL

STATED MEETING OF

WEDNESDAY, MARCH 26, 2014

THE COUNCIL

Minutes of the Proceedings for the
STATED MEETING
of
Wednesday, March 26, 2014, 1:55 p.m.

The Public Advocate (Ms. James)
Acting President Pro Tempore and Presiding Officer

Council Members

Melissa Mark-Viverito, Speaker

Maria del Carmen Arroyo	Vanessa L. Gibson	Rosie Mendez
Inez D. Barron	David G. Greenfield	I. Daneek Miller
Fernando Cabrera	Vincent M. Ignizio	Annabel Palma
Margaret S. Chin	Corey D. Johnson	Antonio Reynoso
Andrew Cohen	Ben Kallos	Donovan J. Richards
Costa G. Constantinides	Andy L. King	Ydanis A. Rodriguez
Robert E. Cornegy, Jr.	Peter A. Koo	Deborah L. Rose
Elizabeth S. Crowley	Karen Koslowitz	Helen K. Rosenthal
Laurie A. Cumbo	Rory I. Lancman	Mark Treyger
Chaim M. Deutsch	Bradford S. Lander	Eric A. Ulrich
Inez E. Dickens	Stephen T. Levin	James Vacca
Daniel Dromm	Mark Levine	Paul A. Vallone
Rafael L. Espinal, Jr.	Alan N. Maisel	James G. Van Bramer
Mathieu Eugene	Steven Matteo	Mark S. Weprin
Julissa Ferreras	Darlene Mealy	Jumaane D. Williams
Daniel R. Garodnick	Carlos Menchaca	Ruben Wills
Vincent J. Gentile		

Excused: Council Member Torres.

The Public Advocate (Ms. James) assumed the Chair as the Acting President Pro Tempore and Presiding Officer.

After consulting with the City Clerk and Clerk of the Council (Mr. McSweeney), the presence of a quorum was announced by the Public Advocate (Ms. James).

There were 50 Council Members marked present at this Stated Meeting held in the Council Chambers of City Hall, New York, N.Y.

INVOCATION

The Invocation was delivered by Rabbi Diana S. Gerson, New York Board of Rabbis, Program Director, 136 East 39th Street, New York, NY 10016.

I'd like to begin by thanking you for inviting me
to this distinguished body today to offer a prayer
in this most auspicious month - Women's History Month
is always one where we take note of the accomplishments of women.
This year we celebrate 42 years of woman in the Rabbinate;
I remember the book *The Hitchhiker's Guide to the Galaxy*
that 42 is the meaning of life—
(so…and 42, well, as a New Yorker, Mariano Rivera?;
we have lots of meanings [laughter].)
There's a wonderful old story in the Jewish tradition
that talks about an elderly man by the side of the road
and he is planting a carob tree
A young man walking down the road, sees the elderly gentlemen and says,
"Sir, why do you labor so hard?
Why are you planting this tree? You will never see its fruits."
The elderly man stopped what he was doing,
looked up at the young man and said,
"Look around you, do you see all the beautiful trees, their fruit in season?"
and the young man said, "Yes"; the elderly man reminded him,
"Someone planted those trees so that I might eat of their fruit;
I must now plant a tree for the next generation";
and with that in mind, I offer this prayer as we turn to you O God:
We have come together in this historic place
where many have toiled before us to fulfill the sacred task
of working together and making this great city, a more complete
and peaceful place for all of its inhabitants.
May you, the Rock of Ages, guide us
in protecting the most vulnerable members of our community
May we work together to raise each other up
to reach our fullest potential in unity without uniformity
Seeing the beauty of our diversity
Our history, our customs, our traditions
Sustain us, o source of all life
Enshrine in our hearts the knowledge
that all are created in your image and that life, your gift to us is sacred.
Inspire us to defeat hunger and hurt,
promote compassion and to find successful ways
to assure the weak their share in life's promise.
In humility we prayer that our sacred work
as a diverse gathering of Community representatives and legislators
will advance reconciliation and harmony in the family of nations
helping to guarantee peace in our neighborhood
and tranquility in the farthest reaches of our city
O God, may you who make peace in high places,
help us here on Earth to find the way to peace
Blessed are you, O God, *oseh Shalom*, Grantor of Peace
and together let us say, Amen.

On behalf of Council Member Levine, Council Member Garodnick moved to spread the Invocation in full upon the Record.

During the Communication from the Speaker segment of the Meeting, the Speaker (Council Member Mark-Viverito) asked for a Moment of Silence in memory of Council Member Garodnick's mother, Barbara Riotto Garodnick. Mrs. Garodnick, a teacher and visual artist, passed away peacefully at home on March 14, 2014.

* * *

Editor's Note: In recognition of Women's History Month, the Women's Caucus of the Council sponsored their annual Councilwoman for the Day event -- each of the fifteen Councilwomen had a young female leader from their respective districts stand by their side at this Stated Meeting as an honorary Councilwoman for the Day.

During the General Discussion segment of the Meeting, the Minority Leader (Council Member Ignizio) introduced and recognized his family in the Council Chambers: daughter Lina and wife Letizia; nieces Olivia and Alyssa Militello;

parents Vincent and Camille; and sister Theresa and brother-in-law Anthony Militello.

ADOPTION OF MINUTES

Council Member King moved that the Minutes of the Stated Meeting of February 26, 2014 be adopted as printed.

LAND USE CALL UPS

M-37

By the Chair of the Land Use Committee Council Member Greenfield:

Pursuant to Rule 11.20(c) of the Council Rules and Section 197-d (b)(3) of the New York City Charter, the Council hereby resolves that the action of the City Planning Commission on Uniform Land Use Review Procedure Application no. C 130339 ZSM shall be subject to Council review. These items are related to Application nos. C 130336 ZMM and C 130337 ZRM which is subject to Council review pursuant to Section 197-d of the New York City Charter.

Coupled on Call – Up Vote

M-38

By Council Member Mendez:

Pursuant to Rule 11.20b of the Council and §20-226 or §20-225 of the New York City Administrative Code, the Council resolves that the action of the Department of Consumer Affairs approving an unenclosed sidewalk café located at 109 Avenue A, in the Borough of Manhattan, Community District 3, Application no. 20145305 TCM shall be subject to review by the Council.

Coupled on Call – Up Vote

M-39

By Council Member Mendez:

Pursuant to Rule 11.20b of the Council and §20-226 or §20-225 of the New York City Administrative Code, the Council resolves that the action of the Department of Consumer Affairs approving an unenclosed sidewalk café located at 32 Avenue B, in the Borough of Manhattan, Community District 3, Application no. 20145306 TCM shall be subject to review by the Council.

Coupled on Call – Up Vote

LAND USE CALL UP VOTE

The Public Advocate (Ms. James) put the question whether the Council would agree with and adopt such motions which were decided in the **affirmative** by the following vote:

Affirmative – Arroyo, Barron, Cabrera, Chin, Cohen, Constantinides, Cornegy, Crowley, Cumbo, Deutsch, Dickens, Dromm, Espinal, Eugene, Ferreras, Garodnick, Gentile, Gibson, Greenfield, Johnson, Kallos, King, Koo, Koslowitz, Lancman, Lander, Levin, Levine, Maisel, Matteo, Mealy, Menchaca, Mendez, Miller, Palma, Reynoso, Richards, Rodriguez, Rose, Rosenthal, Treyger, Ulrich, Vacca, Vallone, Weprin, Williams, Wills, Ignizio, Van Bramer, and the Speaker (Council Member Mark-Viverito) – **50.**

At this point, the Public Advocate (Ms. James) declared the aforementioned items **adopted** and referred these items to the Committee on Land Use and to the appropriate Land Use subcommittee.

REPORTS OF THE STANDING COMMITTEES

Report of the Committee on Civil Rights

Report for Int. No. 173-A

Report of the Committee on Civil Rights in favor of approving and adopting, as amended, a Local Law to amend the administrative code of the city of New York, in relation to the prohibition of discrimination against interns.

The Committee on Civil Rights, to which the annexed amended proposed local law was referred on March 12, 2014 (Minutes, page 683), respectfully

REPORTS:

I. Introduction

On Tuesday, March 25, 2014, the Committee on Civil Rights, chaired by Council Member Darlene Mealy, will vote on Proposed Introductory Bill Number 173-A ("Prop. Int. No. 173-A"), a local law to amend the administrative code of the city of New York, in relation to the prohibition of discrimination against interns. The Committee previously held a hearing on Introductory Bill Number 173 ("Int. No. 173") on March 17, 2014.

II. Background

Internship programs give employers the opportunity to find talent, while providing interns exposure to an industry and increased access to full-time employment opportunities.[1] It is important to note that internship programs vary – some provide compensation, while others are unpaid and offer academic credit or promises of future employment in lieu of pay. Although interns may be any age, according to the National Association of Colleges and Employers internship programs are considered to be an essential component of employers' college recruiting programs.[2] Additionally 69 percent of companies with 100 or more employees offered full-time jobs to their interns in 2012.[3] The internship experience is also an integral part of a professional education for those enrolled in college and graduate level programs.[4] For example, 63 percent of 2012 college graduates completed at least one internship and 28 percent completed two or more internships.[5]

Of particular relevance to the legislation being considered today, those in unpaid internships are in a uniquely vulnerable position. Specifically, a recent decision out of the United States District Court for the Southern District of New York held that unpaid interns are not entitled to protections under federal and local civil rights laws. As a result, such interns could be viewed as not being protected from discrimination and harassment.

The decision, Wang v. Phoenix Satellite Television US, Inc., 2013 WL 5502803 (S.D.N.Y. 2013), concerned Ms. Wang, the plaintiff, who was a graduate student intern with the defendant corporation, Phoenix Satellite Television. Ms. Wang received no compensation during her internship. In her complaint, Ms. Wang alleged that, among other things, her supervisor sexually harassed her in violation of the New York City Human Rights Law ("NYCHRL" or "Human Rights Law").[6] But, the court found that Ms. Wang could not bring an employment discrimination claim under the Human Rights Law because she had not been compensated, a prerequisite to the formation of an employment relationship. The court held that "the plain meaning of the NYCHRL…as well as the legislative history of the NYCHRL all confirm that the NYCHRL's protection of employees does not extend to unpaid interns."[7]

Int. No. 173 was introduced into the City Council in an effort to provide explicit protections to unpaid interns in the Human Rights Law. The Committee on Civil Rights held a hearing on Int. No. 173 on March 17, 2014.

III. Amendments to Prop. Int. No. 173-A

Following the March 17, 2014 hearing on Int. No. 173, certain changes were made to the legislation. Among these changes are:

- Amendments to the definition of "intern" in order to facilitate appropriate relief under the Human Rights Law and the Commission on Human Rights' ("Commission") ability to investigate complaints.
- The inclusion of specific language in Prop. Int. No. 173-A stating that all provisions in the Human Rights Law that apply to employees also apply to interns.
- A provision stating that all interns, regardless of whether they receive a wage, are protected under the Human Rights Law.

IV. Analysis of Prop. Int. No. 173-A

Prop. Int. No. 173-A would amend the Human Rights Law: (i) to define the term "intern;" (ii) clarify that interns are entitled the same protections under the Human Rights Law as employees; and (iii) therefore prohibit employers from discriminating against interns on the basis of their actual or perceived age, race, creed, color, national origin, gender, disability, marital status, partnership status, sexual orientation, alienage or citizenship status, or status as a victim of domestic violence, sex offenses or stalking. An "intern" is defined as an individual who performs work for an employer on a temporary basis whose work provides or supplements training given in an educational environment where the employability of

for the Lower Ma

[1] Jacquelyn Smith, Internships May Be The Easiest Way To A Job in 2013, Forbes, Dec. 6, 2012, http://www.forbes.com/sites/jacquelynsmith/2012/12/06/internships-may-be-the-easiest-way-to-a-job-in-2013/ (last visited Mar. 11, 2014).
[2] National Association of Colleges and Employers, *2013 Internship & Co-op Survey: Executive Summary*, 3, https://www.naceweb.org/uploadedFiles/Content/static-assets/downloads/executive-summary/2013-internship-co-op-survey-executive-summary.pdf (last visited Mar. 11, 2014).
[3] Smith, *supra* note 1.
[4] See David C. Yamada, *The Employment Law Rights of Student Interns*, Connecticut Law Review, Fall 2002, at 217.
[5] Smith, *supra* note 1.
[6] Wang v. Phoenix Satellite Television US, Inc., 2013 WL 5502803, 3 (S.D.N.Y. 2013).
[7] *Id.*at 9.

the individual performing the work may be enhanced, experience is provided for the benefit of the individual performing the work, and the work is performed under the close supervision of staff. The term "intern" includes individuals who meet these requirements regardless of whether they receive pay. Finally, Prop. Int. No. 173-A provides that the provisions under chapter one ("Unlawful Discriminatory Practices") of the Human Rights Law that relate to employees relate to interns.

Penalties

Pursuant to Prop. Int. No. 173-A, an unpaid intern who believes that he or she has been unlawfully discriminated against in violation of the Human Rights Law may bring an action in court for damages, injunctive relief and other appropriate remedies,[8] or make a complaint to the Commission on Human Rights.[9] Upon a finding that an employer has engaged in an unlawful discriminatory practice in violation of the Human Rights Law, the Commission may issue an order to the employer to "cease and desist" the unlawful discriminatory practice.[10] In addition, the Commission could require the employer to hire a prospective employee; award back pay and front pay; or pay compensatory damages, among other things.[11] Under this bill, failure to comply with such an order may result in a civil penalty of no more than $50,000 and an additional civil penalty of no more than $100 per day.[12] Should the Commission find that an employer engaged in an unlawful discriminatory practice, it may impose a civil penalty of $125,000.[13] If the unlawful discriminatory practice resulted from the employer's "willful, wanton or malicious act," the Commission may impose a civil penalty of not more than $250,000.[14] Should a person willfully violate an order of the Commission, he or she may be guilty of a misdemeanor that is punishable by imprisonment for not more than one year, or by a fine of not more than $10,000, or by both.[15] This penalty structure is consistent with other provisions of the Human Rights Law that seek to prohibit workplace discrimination.

Effective Date

This local law would take effect 60 days after its enactment into law.

(The following is the text of the Fiscal Impact Statement for Int. No. 173-A:)

THE COUNCIL OF THE CITY OF NEW YORK
FINANCE DIVISION

FISCAL IMPACT STATEMENT

PROPOSED INTRO. NO: 0173 - A
COMMITTEE: Civil Rights

TITLE: To amend the administrative code of the city of New York, in relation to the prohibition of discrimination against interns.	**SPONSOR(S):** By Council Member Vacca, Chin, Cohen, Constantinides, Lancman, Mealy, Torres, King, Arroyo, Cumbo and Rosenthal (by request of the Manhattan Borough President)

SUMMARY OF LEGISLATION: Proposed Int. No. 0173-A would amend the administrative code of the city of New York, to prohibit discrimination against interns. The purpose of this bill is to ensure that the same protections given to employees are also given to interns. This bill would amend the City's Human Rights Law to: (i) define the term "intern;" (ii) clarify that interns are entitled the same protections under the Human Rights Law as employees; and (iii) therefore prohibit employers from discriminating against interns on the basis of their actual or perceived age, race, creed, color, national origin, gender, disability, marital status, partnership status, sexual orientation, alienage or citizenship status, or status as a victim of domestic violence, sex offenses or stalking. It would also require employers to provide reasonable accommodations to interns for religious observance.

EFFECTIVE DATE: This local law shall take effect 60 days after its enactment into law.

FISCAL YEAR IN WHICH FULL FISCAL IMPACT ANTICIPATED: Fiscal 2014

FISCAL IMPACT STATEMENT:

for the Lower Ma———————————

[8] Admin. Code §8-502.
[9] Admin. Code §8-109.
[10] Admin. Code §8-120(a).
[11] *Id.*
[12] Admin. Code §8-124.
[13] Admin. Code §8-126(a).
[14] *Id.*
[15] Admin. Code §8-129.

	Effective FY14	FY Succeeding Effective FY15	Full Fiscal Impact FY14
Revenues	**$0**	**$0**	**$0**
Expenditures	**$0**	**$0**	**$0**
Net	**$0**	**$0**	**$0**

IMPACT ON REVENUES: There would be no impact on revenues from the enactment of this legislation.

IMPACT ON EXPENDITURES: Adoption of Proposed Int. 0173-A would not impact expenditures.

SOURCE OF FUNDS TO COVER ESTIMATED COSTS: NA NA

SOURCE OF INFORMATION: The Office of Management and Budget

ESTIMATE PREPARED BY: Eisha N. Wright, Unit Head, Finance Division

ESTIMATED REVIEWED BY: Regina Poreda Ryan, Deputy Director, Finance Division
Tanisha Edwards, Chief Counsel, Finance Division

LEGISLATIVE HISTORY: On March 12, 2014, Intro. 0173 was introduced by the Council and referred to the Committee on Civil Rights. On, March 17, 2014, the Committee held a hearing regarding this legislation, which was then laid over and subsequently amended. The Committee will consider an amended version of the legislation, Proposed Intro. 0173-A on March 25, 2014. Following a successful Committee vote, on March 25th, the City Council will vote on Proposed Int. 0173-A.

DATE SUBMITTED TO COUNCIL: March 12, 2014.

Accordingly, this Committee recommends its adoption, as amended.

(The following is the text of Int. No. 173-A:)

Int. No. 173-A

By Council Members Vacca, Chin, Cohen, Constantinides, Lancman, Mealy, Torres, King, Arroyo, Cumbo, Rosenthal, Eugene, Barron, Crowley, Greenfield, Van Bramer, Williams and Koslowitz (by request of the Manhattan Borough President).

A Local Law to amend the administrative code of the city of New York, in relation to the prohibition of discrimination against interns.

Be it enacted by the Council as follows:

Section 1. Section 8-102 of chapter one of title eight of the administrative code of the city of New York is amended by adding a new subdivision 28 to read as follows:

28. The term "intern" shall mean an individual who performs work for an employer on a temporary basis whose work: (a) provides training or supplements training given in an educational environment such that the employability of the individual performing the work may be enhanced; (b) provides experience for the benefit of the individual performing the work; and (c) is performed under the close supervision of existing staff. The term shall include such individuals without regard to whether the employer pays them a salary or wage.

§ 2. Section 8-107 of chapter one of title eight of the administrative code of the city of New York is amended by adding a new subdivision 23 to read as follows:

23. The provisions of this chapter relating to employees shall apply to interns.

§ 3. This local law shall take effect in sixty days.

DARLENE MEALY, Chairperson; MATHIEU EUGENE, DANIEL DROMM, DEBORAH L. ROSE, ANDREW L. KING; Committee on Civil Rights, March 25, 2014. *Other Council Members Attending: Vacca*.

On motion of the Speaker (Council Member Mark-Viverito), and adopted, the foregoing matter was coupled as a General Order for the day (see ROLL CALL ON GENERAL ORDERS FOR THE DAY).

Reports of the Committee on Finance

At this point the Speaker (Council Member Mark-Viverito) announced that the following items had been **preconsidered** by the Committee on Finance and had been favorably reported for adoption.

Report for Res. No. 135

Report of the Committee on Finance in favor of approving a Resolution approving the new designation and changes in the designation of certain organizations to receive funding in the Expense Budget.

The Committee on Finance, to which the annexed resolution was referred on March 26, 2014, respectfully

REPORTS:

Introduction. The Council of the City of New York (the "Council") annually adopts the City's budget covering expenditures other than for capital projects (the "expense budget") pursuant to Section 254 of the Charter. On June 27, 2013, the Council adopted the expense budget for fiscal year 2014 with various programs and initiatives (the "Fiscal 2014 Expense Budget"). On June 28, 2012, the Council adopted the expense budget for fiscal year 2013 with various programs and initiatives (the "Fiscal 2013 Expense Budget"). On June 29, 2011, the Council adopted the expense budget for fiscal year 2012 with various programs and initiatives (the "Fiscal 2012 Expense Budget").

Analysis. This Resolution, dated March 26, 2014, approves new designations and changes in the designation of certain organizations receiving local, aging, and youth discretionary funding in accordance with the Fiscal 2014 and Fiscal 2013 Expense Budgets, and approves the new designations and changes in the designation of certain organizations to receive funding pursuant to certain initiatives in the Fiscal 2014, 2013 and Fiscal 2012 Expense Budgets, and amends the description for the Description/Scope of Services of certain organizations receiving local, aging and youth discretionary funding in accordance with the Fiscal 2014 and Fiscal 2013 Expense Budgets.

In an effort to continue to make the budget process more transparent, the Council is providing a list setting forth new designations and/or changes in the designation of certain organizations receiving local, aging, and youth discretionary funding, as well as new designations and/or changes in the designation of certain organizations to receive funding pursuant to certain initiatives in the Fiscal 2014, Fiscal 2013 and Fiscal 2012 Expense Budgets.

This resolution sets forth new designations and specific changes in the designation of certain organizations receiving local initiative funding pursuant to the Fiscal 2014 Expense Budget, as described in Chart 1; sets forth new designations and changes in the designation of youth discretionary funding pursuant to the Fiscal 2014 Expense Budget, as described in Chart 2; sets forth the new designations and changes in the designation of certain organizations that will receive funding pursuant to certain initiatives in the Fiscal 2014 Expense Budget, as described in Charts 4-8; sets forth the new designations and changes in the designation of certain organizations that will receive funding pursuant to certain initiatives in the Fiscal 2012 Expense Budget, as described in Chart 9; amends the description for the Description/Scope of Services for certain organizations receiving local, aging, youth, and initiative discretionary funding pursuant to the Fiscal 2014 Expense Budget as described in Chart 10; and amends the description for the Description/Scope of Services for certain organizations receiving local, aging, youth, and initiative discretionary funding pursuant to the Fiscal 2013 Expense Budget as described in Chart 11.

The charts, attached to the Resolution, contain the following information: name of the council member(s) designating the organization to receive funding or name of the initiative, as set forth in Adjustments Summary/Schedule C/ Fiscal 2014 Expense Budget, dated June 27, 2013, and Adjustments Summary/Schedule C/ Fiscal 2013 Expense Budget, dated June 28, 2012.

Specifically, Chart 1 sets forth the new designation and changes in the designation of certain organizations receiving local discretionary funding in accordance with the Fiscal 2014 Expense Budget.

Chart 2 sets forth the new designation and changes in the designation of certain organizations receiving youth discretionary funding in accordance with the Fiscal 2014 Expense Budget.

Chart 3 sets forth the new designation and changes in the designation of certain organizations receiving funding pursuant to the Discretionary Child Care Initiative in accordance with the Fiscal 2014 Expense Budget.

Chart 4 sets forth the new designation and changes in the designation of a certain organization receiving funding pursuant to the Cultural After School Adventure Initiative in accordance with the Fiscal 2014 Expense Budget.

Chart 5 sets forth the new designation and changes in the designation of a certain organization receiving funding pursuant to the Adult Literacy Services Initiative in accordance with the Fiscal 2014 Expense Budget.

Chart 6 sets forth the new designation and changes in the designation of certain organizations receiving funding pursuant to the Obesity Prevention Initiative in accordance with the Fiscal 2014 Expense Budget.

Chart 7 sets forth changes in the designation of a certain organization receiving funding pursuant to the Child Care Vouchers Initiative in accordance with the Fiscal 2014 Expense Budget.

Chart 8 sets forth changes in the designation of a certain organization receiving funding pursuant to the Anti-Gun Violence Initiative/Gun Buy Back Program in accordance with the Fiscal 2014 Expense Budget.

Chart 9 sets forth the new designation and changes in the designation of a certain organization receiving funding pursuant to the Mental Hygiene Contracted Services Partial PEG Restoration – Chemical Dependency/ADUPCT in accordance with the Fiscal 2012 Expense Budget.

Chart 10 amends the description for the Description/Scope of Services for certain organizations receiving local, aging, youth and initiative discretionary funding in accordance with the Fiscal 2014 Expense Budget.

Chart 11 amends the description for the Description/Scope of Services for certain organizations receiving local and aging discretionary funding in accordance with the Fiscal 2013 Expense Budget.

It is to be noted that organizations identified in the attached Charts with an asterisk (*) have not yet completed or began the prequalification process conducted by the Mayor's Office of Contract Services (for organizations to receive more than $10,000) by the Council (for organizations to receive $10,000 or less total), or other government agency. Organizations identified without an asterisk have completed the appropriate prequalification review.

It should be further noted that funding for organizations in the attached Charts with a double asterisk (**) will not take effect until the passage of a budget modification.

Description of Above-captioned Resolution. In the above-captioned Resolution, the Council would approve the new designation and changes in the designation of certain organizations to receive funding in the Fiscal 2014 and 2013 Expense Budgets. Such Resolution would take effect as of the date of adoption.

Accordingly, this Committee recommends its adoption.

(The following is the text of Res. No. 135:)

Res. No. 135

Resolution approving the new designation and changes in the designation of certain organizations to receive funding in the Expense Budget.

By Council Member Ferreras.

Whereas, On June 27, 2013 the Council of the City of New York (the "City Council") adopted the expense budget for fiscal year 2014 with various programs and initiatives (the "Fiscal 2014 Expense Budget"); and

Whereas, The City Council is hereby implementing and furthering the appropriations set forth in the Fiscal 2014 Expense Budget by approving the new designation and changes in the designation of certain organizations receiving local, aging and youth discretionary funding, and by approving the new designation and changes in the designation of certain organizations to receive funding pursuant to certain initiatives in accordance therewith; and

Whereas, The City Council is hereby implementing and furthering the appropriations set forth in the Fiscal 2014 Expense Budget by approving new Description/Scope of Services for certain organizations receiving local, aging, and youth discretionary funding; and

Whereas, On June 28, 2012 the Council of the City of New York (the "City Council") adopted the expense budget for fiscal year 2013 with various programs and initiatives (the "Fiscal 2013 Expense Budget"); and

Whereas, The City Council is hereby implementing and furthering the appropriations set forth in the Fiscal 2014 Expense Budget by approving the new designation and changes in the designation of certain organizations receiving local, aging and youth discretionary funding, and by approving the new designation and changes in the designation of certain organizations to receive funding pursuant to certain initiatives in accordance therewith; and

Whereas, On June 29, 2011 the Council of the City of New York (the "City Council") adopted the expense budget for fiscal year 2014 with various programs and initiatives (the "Fiscal 2012 Expense Budget"); and

Whereas, The City Council is hereby implementing and furthering the appropriations set forth in the Fiscal 2012 Expense Budget by approving the new designation and changes in the designation of certain organizations receiving local, aging and youth discretionary funding, and by approving the new designation and changes in the designation of certain organizations to receive funding pursuant to certain initiatives in accordance therewith; and

Whereas, The City Council is hereby implementing and furthering the appropriations set forth in the Fiscal 2013 Expense Budget by approving new Description/Scope of Services for certain organizations receiving local and aging discretionary funding; now therefore be it

Resolved, That the City Council approves the new designation and changes in the designation of certain organizations receiving local discretionary funding in accordance with the Fiscal 2014 Expense Budget, as set forth in Chart 1; and be it further

Resolved, That the City Council approves the new designation and changes in the designation of certain organizations receiving youth discretionary funding in accordance with the Fiscal 2014 Expense Budget, as set forth in Chart 2; and be it further

Resolved, That the City Council approves the new designation and changes in the designation of certain organizations receiving funding pursuant to the Discretionary Child Care Initiative in accordance with the Fiscal 2014 Expense Budget, as set forth in Chart 3; and be it further

Resolved, That the City Council approves the new designation and changes in the designation of a certain organization receiving funding pursuant to the Cultural After School Adventure Initiative in accordance with the Fiscal 2014 Expense Budget, as set forth in Chart 4; and be it further

Resolved, That the City Council approves the new designation and changes in the designation of a certain receiving funding pursuant to the Adult Literacy Services Initiative in accordance with the Fiscal 2014 Expense Budget, as set forth in Chart 5; and be it further

Resolved, That the City Council approves the new designation and changes in the designation of certain organizations receiving funding pursuant to the Obesity Prevention Initiative in accordance with the Fiscal 2014 Expense Budget, as set forth in Chart 6; and be it further

Resolved, That the City Council approves the new designation and changes in the designation of certain organizations receiving funding pursuant to the Child Care Vouchers Initiative in accordance with the Fiscal 2014 Expense Budget, as set forth in Chart 7; and be it further

Resolved, That the City Council approves the new designation and changes in the designation of certain organizations receiving funding pursuant to the Anti-Gun Violence Initiative/Gun Buy Back Program in accordance with the Fiscal 2014 Expense Budget, as set forth in Chart 8; and be it further

Resolved, That the City Council approves the new designation and changes in the designation of certain organizations receiving funding pursuant to the Mental Hygiene Contracted Services Partial PEG Restoration - Chemical Dependency/ADUPCT in accordance with the Fiscal 2012 Expense Budget, as set forth in Chart 9; and be it further

Resolved, That the City Council approves the new Description/Scope of Services for certain organizations receiving local, aging, and youth discretionary funding in accordance with the Fiscal 2014 Expense Budget, as set forth in Chart 10; and be it further

Resolved, That the City Council approves the new Description/Scope of Services for certain organizations receiving local and aging discretionary funding in accordance with the Fiscal 2013 Expense Budget, as set forth in Chart 11.

ATTACHMENT:

CHART 1: Local Initiatives - Fiscal 2014

Member	Organization	EIN Number	Agency	Amount	Agy #	U/A	Fiscal Conduit/Sponsoring Organization	Fiscal Conduit EIN *
Koo	Queens College Foundation, Inc. **	11-6080521	DYCD	($10,000.00)	260	312		
Koo	Queens College Foundation, Inc. **	11-6080521	CUNY	$10,000.00	042	001		
Gentile	Neighbors Helping Neighbors Inc. **	11-3059958	DYCD	($2,000.00)	260	005		
Gentile	Neighbors Helping Neighbors Inc. **	11-3059958	HPD	$2,000.00	806	009		
Comrie	Korean American Association of Queens New York, Inc. **	45-4685421	OCJC	($3,500.00)	098	002		
Comrie	Korean American Association of Queens New York, Inc. **	45-4685421	DYCD	$3,500.00	260	005		
Quinn	Friends of Downtown Parks NYC	46-1974668	DPR	($3,500.00)	846	006		
Quinn	Department of Parks and Recreation	13-6400434	DPR	$3,500.00	846	006		
Gentile	Green-Wood Historic Fund, Inc. **	11-3450678	DYCD	($2,500.00)	260	005		
Gentile	Green-Wood Historic Fund, Inc. **	11-3450678	DCLA	$2,500.00	126	003		
Eugene	Diaspora Community Services, Inc. **	11-3122295	DOHMH	($6,000.00)	816	113		
Eugene	Diaspora Community Services, Inc. **	11-3122295	DYCD	$6,000.00	260	005		
CC	Union Settlement Association, Inc.**	13-1632530	DSBS	$65,000.00	801	002		
CC	Alliance for Coney Island, Inc.**	46-0802042	DSBS	$30,000.00	801	002		
CC	Staten Island Chamber of Commerce Foundation, Inc.**	13-4069282	DSBS	$30,000.00	801	002		
CC	Southwest Brooklyn Industrial Development Corporation**	11-2508370	DSBS	$30,000.00	801	002		
CC	Rockaway Development and Revitalization Corporation**	11-2575794	DSBS	$30,000.00	801	002		
CC	Chinatown Partnership Local Development Corporation**	42-1650478	DSBS	$30,000.00	801	002		
CC	John Jay College of Criminal Justice**	13-3893536	CUNY	$15,000.00	042	001		
CC	Brooklyn Alliance, Inc. (Brooklyn Chamber of Commerce)**	11-2145956	DSBS	$75,000.00	801	002		

* Indicates pending completion of pre-qualification review.
** Requires a budget modification for the changes to take effect

CHART 2: Youth Discretionary - Fiscal 2014

Member	Organization	EIN Number	Agency	Amount	Agy #	U/A	Fiscal Conduit/Sponsoring Organization	Fiscal Conduit EIN *
Mealy	Harmony Music Makers, Inc.	20-2646094	DYCD	($3,500.00)	260	312		
Mealy	Nia Theatrical Production Company, Inc.	11-3427470	DYCD	$3,500.00	260	312		
Koo	Korean American Voters Council, Inc.	20-3987662	DYCD	($4,500.00)	260	312		
Koo	Korean American Civic Empowerment for Community, Inc.	20-3987662	DYCD	$4,500.00	260	312		
Weprin	Korean American Voters Council, Inc.	20-3987662	DYCD	($10,714.00)	260	312		
Weprin	Korean American Civic Empowerment for Community, Inc.	20-3987662	DYCD	$10,714.00	260	312		

* Indicates pending completion of pre-qualification review.
** Requires a budget modification for the changes to take effect

CHART 4: Cultural After School Adventure - Fiscal 2014

Member	Organization	EIN Number	Agency	Amount	Agy #	U/A	*
Greenfield	Brooklyn Arts Council, Inc. - Beth Jacob of Boro Park	23-7072915	DCLA	($20,000.00)	126	003	
Greenfield	Brooklyn Arts Council, Inc. - P.S. 180, the SEEALL Academy	23-7072915	DCLA	$20,000.00	126	003	

* Indicates pending completion of pre-qualification review.

** Requires a budget modification for the changes to take effect

CHART 3: Discretionary Child Care - Fiscal 2014

Member	Organization	EIN Number	Agency	Amount	Agy #	U/A	*
Espinal	Labor & Industry for Education -TBD Knickerboker site	11-4088055	ACS	($400,000.00)	068	004	
Espinal	Labor & Industry for Education - 272 Moffat Street	11-4088055	ACS	$400,000.00	068	004	
Wills	St. Albans Montessori Academy of Learning - 95-15/17 Waltham Street	46-1560690	ACS	($600,000.00)	068	004	
Rodriguez	Dominican Women's Development Center	13-3593885	ACS	($73,570.00)	068	004	
Cornegy	Tabernacle Church of God, Inc.	11-2224258	ACS	$84,000.00	068	004	
Levin	Alonzo A. Daughtry Memorial Day Care Center - 565 Baltic Street	11-2248164	ACS	$210,926.00	068	004	
Reynoso	Conselyea Street Block Association - Small World DCC	11-2347180	ACS	$158,294.00	068	004	
Wills	Afro-American Parents DCC 2	13-2727406	ACS	$41,355.00	068	004	
Wills	Afro-American Parents DCC 3	13-2727406	ACS	$122,474.00	068	004	
Miller	St. Albans Montessori Academy of Learning- 118-49 Montauk Street	46-1560690	ACS	$46,875.00	068	004	
Barron	United Community Day Care Center - 613 New Lots	11-1950787	ACS	$9,646.00	068	004	

* Indicates pending completion of pre-qualification review.

** Requires a budget modification for the changes to take effect

CHART 6: Obesity Prevention Initiative- Fiscal 2014

Organization	EIN Number	Agency	Amount	Agy #	U/A	*
Foundation for the Advancement of Cardiac Therapies-Health Corp.	26-1269358	DOHMH	($750,000.00)	816	113	
Health Corps, Inc.	26-1269358	DOHMH	$750,000.00	816	113	

* Indicates pending completion of pre-qualification review.

CHART 5: Adult Literacy Services Initiative - Fiscal 2014

Organization	EIN Number	Agency	Amount	Agy #	U/A	*
Boro Park Jewish Community Council	11-3475993	DYCD	($10,000.00)	260	005	
Council of Jewish Organizations of Flatbush, Inc.	11-2864728	DYCD	$10,000.00	260	005	

* Indicates pending completion of pre-qualification review.

CHART 8: Anti-Gun Violence Initiative/Gun Buy-Back Program- Fiscal 2014

Organization	EIN Number	Agency	Amount	Agy #	U/A	*
New York City Police Department	13-6400434	NYPD	($105,000.00)	056	100	

* Indicates pending completion of pre-qualification review.

CHART 7: Child Care Vouchers - Fiscal 2014

Organization	EIN Number	Agency	Amount	Agy #	U/A	*
Administration for Children Services	13-6400434	ACS	($200,000.00)	068	004	

* Indicates pending completion of pre-qualification review.

CHART 10: Purpose of Funds Changes - Fiscal 2014

Source	Organization	EIN Number	Agency	Amount	New Purpose of Funds	*
Local	Congregation Lman Achai, Inc.	11-2946285	DYCD	($3,500.00)	Funding to conduct educational and recreational programs for approximately 160 youths ages 7-21 through after school classes, summer retreats and weekly youth gatherings. The funding requested will go towards rent.	
Local	Congregation Lman Achai, Inc.	11-2946285	DYCD	$3,500.00	Funding to conduct educational and recreational programs for approximately 160 youths ages 7-21 through after school classes, summer retreats and weekly youth gatherings. The funding requested will go towards rent. Programs are advertised to the public via flyering throughout various Brooklyn neighborhoods as well as in English on their website, http://camplmanachai.com/.	
Local	Borough Park Jewish Community Council	11-3475993	DFTA	($4,000.00)		
Local	Borough Park Jewish Community Council	11-3475993	DFTA	$4,000.00	Funds will help pay staff that will administer vital social services and leverage privately-raised funding. These services include advocacy; counseling clients on benefits and entitlements; processing and renewal of Food Stamps, Medicaid, Child Health Plus, Family Health Plus, and Medicare.	
Local	Caribbean Women's Health Association	13-3323168	DOHMH	($10,000.00)	To assist clients in completing applications for green cards and citizenship. Funds will cover portions of the salary for the attorney and paralegal.	
Local	Caribbean Women's Health Association	13-3323168	DOHMH	$10,000.00	To conduct a CDC evidence based intervention at schools, churches in the community for African American women. During group sessions women are trained on ethnic and gender pride, HIV knowledge, and skills training around sexual risk reduction behaviors and decision making, obesity, and preconception health. To provide high risk African American women in Central Brooklyn with the knowledge and tools they need to prepare themselves for a healthy pregnancy and their babies.	
Local	82nd Street District Management Association, Inc.	11-3096017	DSBS	($3,500.00)		
Local	82nd Street District Management Association, Inc.	11-3096017	DSBS	$3,500.00	Funds will help to assist with merchant organizing, small business outreach, and communications on Roosevelt Avenue from 81st Street to 104th Street in the neighborhoods of Jackson Heights, Elmhurst, and Corona. The 82nd Partnership will help organize and engage the businesses located in this area in an initiative that promotes the local business community.	
Local	Coney Island USA	13-3215645	DCLA	($4,000.00)		
Local	Coney Island USA	13-3215645	DCLA	$4,000.00	Funds will be used for the Mermaid Parade, The Coney Island Circus Sideshow, and the New Play Production; all of these are open to the public.	
Local	CUNY Dominican Studies Institute	13-6400434	CUNY	($20,000.00)	0	
Local	CUNY Dominican Studies Institute	13-6400434	CUNY	$20,000.00	Funding is requested from NYC Council for CUNY DSI to guarantee the services of its Library, Archives, Gallery as well as its Research Unit. Funding also supports educational workshops for k-12 students, academic lectures, seminars, art exhibits, all open to the public, free of charge, organized in the evenings weekends.	
Local	Tanima Productions, Inc.	13-3780465	DYCD	($5,000.00)		
Local	Tanima Productions, Inc.	13-3780465	DYCD	$5,000.00	Tanimas Activities are aimed at keeping our Youths involved in a Positive and Supportive environment, which will help shape their future and enable them to become productive members in their Community. Funds will be used to cover Payroll Expenses. Tanima Production serves Children and Youths.	
Local	Kips Bay Neighborhood Alliance		DYCD	($3,500.00)		
Local	Kips Bay Neighborhood Alliance	45-5308456	DYCD	$3,500.00	Funding will support daily maintenance of a new pedestrian plaza space for use by local businesses, neighborhood organizations and residents.	

* Indicates pending completion of pre-qualification review.

CHART 9: Mental Hygiene Contracted Services Partial PEG Restoration - Chemical Dependency/ADUPCT- Fiscal 2012

Organization	EIN Number	Agency	Amount	Agy #	U/A	*
Mental Health Providers of Western Queens, Inc.	51-0204121	DOHMH	($55,201.00)	816	122	
Mental Health Providers of Western Queens, Inc.	11-2700062	DOHMH	$55,201.00	816	122	

* Indicates pending completion of pre-qualification review.

CHART 10: Purpose of Funds Changes - Fiscal 2014 (Continued)

Source	Organization	EIN Number	Agency	Amount	New Purpose of Funds	*
Aging	Young Israel Of Queens Valley Senior League	13-3613262	DFTA	($10,000.00)	We serve hot nutritious lunch we provide education, recreation, health promotion and nutrition education. Funding will be used to help support the aforementioned programming such as our educational classes in Computer Technology and Arts Crafts, recreational activities and health promotion programs.	
Aging	Young Israel Of Queens Valley Senior League	13-3613262	DFTA	$10,000.00	We serve hot nutritious lunch we provide education, recreation, health promotion and nutrition education.Funding will be used to supplement occupancy and utilities expenses to help support the aforementioned programming such as our education classes in Computer Technology and Arts & Crafts. Recreational activities such as Holiday Parties. Field trips to Museums and places of interest. Health Promotion programs such as Tai Chi, Yoga and Pilate classes.	
Local	Greenhope Services for Women	13-2813350	DYCD	($50,000.00)	To fund a Mother and Child Recovery Program to support formerly incarcerated mothers and their children through the provision of child care and career/education services. Our Philip Reed Child Development Center will provide structured child care, individualized education, prenatal consultations, meals, family services, and social service referrals. Our Career/Educational Program will help mothers obtain their GEDs and pursue educational opportunities in preparation for the job market.	
Local	Greenhope Services for Women	13-2813350	DYCD	$50,000.00	Child Development Center will provide structured child care, individualized education, prenatal consultations, meals, family services and social referrals. Career and Educational program will provide mothers with adult Basic Education(ABE) and will help mothers pursue education opportunities in preparation for the job market.	

* Indicates pending completion of pre-qualification review.

CHART 10: Purpose of Funds Changes - Fiscal 2014 (Continued)

Source	Organization	EIN Number	Agency	Amount	New Purpose of Funds	*
Local	Community Service Center of Greater Williamsburg Inc	13-6400434	DFTA	($25,000.00)		
Local	Community Service Center of Greater Williamsburg Inc	13-6400434	DFTA	$25,000.00	To assist and educate the community in services and updates on services for Seniors, such as Enrollment in Medicare, Med Part D, and Social Security Retirement as well as homecare referral and enrollment.	
Local	Korean War Veterans Chapter #171	14-1941454	DYCD	($1,000.00)		
Local	Korean War Veterans Chapter #171	14-1941454	DYCD	$1,000.00	Funding will help continue our services as we purchase and distribute packages to active duty soldiers at military installations and military hospitals.	
Aging	Brooklyn Chinese American Association	11-3065859	DFTA	($4,500.00)		
Aging	Brooklyn Chinese American Association	11-3065859	DFTA	$4,500.00	The requested funds will go towards recreational and educational activities, monthly social events, and facility rental and insurance costs at BCA's Senior Citizens Center.	
Aging	SEBCO Development, Inc.	13-2944013	DFTA	($7,000.00)		
Aging	SEBCO Development, Inc.	13-2944013	DFTA	$7,000.00	The SEBCO Senior Center will be operating out of the Erma Cava location at 887 Southern Blvd, Bronx, 10459. The site will provde daily hot lunches (110), case management, recreational and educational activities, classes, bus trips and physical fitness programs. The discretionary funding will be used for drop 0ff meals and the leasing of a van. The center will provide an additional meals as a drop off at the former satellite site at Pio Mendez, 1291 Lafayette Ave., 10474. We are also going to be leasing a van to pick seniors up from that site and other senior buildings so that they can participate in the Senior Center Programs.	
Youth	SEBCO Development, Inc.	13-2944013	DYCD	($8,000.00)		
Youth	SEBCO Development, Inc.	13-2944013	DYCD	$8,000.00	The funds will be used to pay the salary of two staff positions, the Camp Director and the Camp Counselor for the SEBCO Summer Day Camp. The camp will operate out of the community room at 941 Faile Street, Bronx, 10459. The camp maintains a daily schedule, breakfast, lunch and snacks. The camp activities consist of trips to local parks, museumsm recreational facilities as well as weekly trips to sites outside the city. There are also recreational and educational activities on site.	
Local	Hip to Hip Theater	26-4049629	DYCD	($3,500.00)		
Local	Hip to Hip Theater	26-4049629	DYCD	$3,500.00	Funds are used for artist stipends, production costs (including costumes, sets, lights, sound equipment), touring costs (including truck rental, fuel and artist transportation), and advertising	
Local	Nvkanchik Sapi Ayazamna Inc.		DYCD	($3,500.00)		
Local	Nvkanchik Sapi Ayazamna Inc.	27-0521135	DYCD	$3,500.00	Rehearsal space rental, wardrobe maintenance, performances	
Local	The New York City Gay & Lesbian Anti-Violence Project	13-3149200	DSS	($3,500.00)		
Local	The New York City Gay & Lesbian Anti-Violence Project	13-3149200	DSS	$3,500.00	To support the hotline, direct client services, targeted outreach, volunteer training, community alerts and documentation of violent incidents	
Local	Urban Librarians Unite, Inc.	45-3803373	DYCD	($3,500.00)		
Local	Urban Librarians Unite, Inc.	45-3803373	DYCD	$3,500.00	Funds support the expansion of programs and services	

* Indicates pending completion of pre-qualification review.

CHART 11: Purpose of Funds Changes - Fiscal 2013

Source	Organization	EIN Number	Agency	Amount	New Purpose of Funds	*
Local	Masbia Of Queens	27-0363356	DYCD	($5,000.00)	To fight hunger with the purchase of fresh fruits and vegetables.	
Local	Masbia Of Queens	27-0363356	DYCD	$5,000.00	Funds will be used to pay for rent.	

* Indicates pending completion of pre-qualification review.

JULISSA FERRERAS, Chairperson; YDANIS A. RODRIGUEZ, JAMES VAN BRAMER, VANESSA L. GIBSON, COREY D. JOHNSON, MARK LEVINE, I. DANEEK MILLER, HELEN K. ROSENTHAL, VINCENT M. IGNIZIO; Committee on Finance, March 26, 2014.

On motion of the Speaker (Council Member Mark-Viverito), and adopted, the foregoing matter was coupled as a General Order for the day (see ROLL CALL ON GENERAL ORDERS FOR THE DAY).

At this point the Speaker (Council Member Mark-Viverito) announced that the following items had been **preconsidered** by the Committee on Finance and had been favorably reported for adoption.

Report for L.U. No. 38

Report of the Committee on Finance in favor of approving a Section 202 Supportive Housing Program For The Elderly, Artsbridge Senior Housing 1446-1458 Plimpton Avenue & 1416-1426 Edward L. Grant Highway, Bronx, Community District No. 4, Council District No. 16.

The Committee on Finance, to which the annexed resolution was referred on March 26, 2014, respectfully

REPORTS:

(The following is the text of a Memo sent to the Committee on Finance from the Finance Division of the New York City Council:)

TO: Hon. Julissa Ferreras
Chair, Finance Committee

Members of the Finance Committee

FROM: Sarah Gastelum, Finance Division

RE: Finance Committee Agenda of March 26, 2014- Resolution approving a tax exemption for one Land Use Item (Council District 16).

Artsbridge Senior Housing (Block 2874, Lots 3, 6, 8, 10 & 27) in the Bronx consists of one multi-family building with 61 units of rental housing for elderly persons of low income, and approximately 22,557 square feet of community facility space. The proposed project is comprised of four City-owned properties and one privately owned property that the Department of Housing Preservation and Development ("HPD") will acquire and then dispose of to a qualified and eligible sponsor designated by HPD ("Sponsor"). Sponsor will then convey the Acquisition Area to Artsbridge Housing Development Fund Corporation ("HDFC") who will construct the project, consisting of one, new 7-story elevator building, a community facility, accessory parking, and adjacent open space, under the Section 202 Supportive Housing Program for the Elderly. The project will receive financing and operating subsidies from the United States Department of Housing and Urban Development ("HUD") and eligible tenants will receive Section 8 rental assistance. On February 4, 2014 (Res. No. 41), the Council approved a designation of the Project Area as an urban development action area project, pursuant to Section 691, 693 and 694 of the General Municipal Law. In addition, the HDFC and HPD will enter into a Regulatory Agreement establishing certain controls upon the operation of the exemption area. In order to facilitate the project, HPD respectfully requests that the Council approve, pursuant to Section 422 of the Private Housing Finance Law ('PHFL"), a 40 year, partial tax exemption from real property taxation.

This item has the approval of Council Member Vanessa Gibson.

Accordingly, this Committee recommends its adoption.

(The following is the text of Res. No. 152:)

Res. No. 152

Resolution approving a partial exemption from real property taxes for property located at (Block 2874, Lots 3, 6, 8, p/o 10 & 27) the Bronx, pursuant to Section 422 of the Real Property Tax Law (Preconsidered L.U. No. 38).

By Council Member Ferreras.

WHEREAS, the New York City Department of Housing Preservation and Development ("HPD") submitted to the Council its request dated January 17, 2014 that the Council take the following action regarding a housing project located at (Block 2874, Lots 3, 6, 8, p/o 10 & 27) the Bronx ("Exemption Area"):

Approve a partial exemption of the Project from real property taxes pursuant to Section 422 of the Real Property Tax Law (the "Tax Exemption");

WHEREAS, the project description that HPD provided to the Council states that the purchaser of the Project (the "Sponsor") is a duly organized housing development fund company under Article XI of the Private Housing Finance Law;

WHEREAS, the Council has considered the financial implications relating to the Tax Exemption;

RESOLVED:

The Council hereby grants a partial exemption from real property taxes as follows:

1. All of the value of the property included in the housing project, including both Disposition Area and improvements, shall be exempt from real property taxes, other than assessments for local improvements, from the date of conveyance of the land to the Sponsor until the date of issuance of the temporary or permanent Certificate of Occupancy for the housing project.

2. All of the value of the property included in the housing project (excluding those portions, if any, devoted to business or commercial use), shall be exempt from real property taxes, other than assessments for local improvements, commencing upon the date of issuance of the temporary or permanent Certificate of Occupancy for the housing project (or, if the housing project is constructed in stages, upon the date of issuance of the temporary or permanent Certificate of Occupancy for each such stage) ("Effective Date") and terminating upon the earlier to occur of (i) the date the HUD mortgage is satisfied, or (ii) a date which is forty (40) years from the Effective Date ("Expiration Date"); provided, however, that the Sponsor shall make an annual real estate tax payment commencing upon the Effective Date and terminating upon the Expiration Date.

3. Commencing upon the Effective Date and during each year thereafter until the Expiration Date, the Sponsor shall make real estate tax payments in the sum of (i) $45,146, which is ten percent (10%) of the annual shelter rent for the housing project, as determined by HPD in accordance with the formula agreed upon with HUD, plus (ii) an additional amount equal to twenty-five percent (25%) of the amount by which the total contract rents applicable to the housing project for that year (as adjusted and established pursuant to Section 8 of the United States Housing Act of 1937, as amended) exceed the total contract rents which are authorized as of the Effective Date. Notwithstanding the foregoing, the total annual real estate tax payment by the Sponsor shall not at any time exceed the lesser of either (i) seventeen percent (17%) of the contract rents, or (ii) the amount of real estate taxes that would otherwise be due in the absence of any form of tax exemption or abatement provided by any existing or future local, state, or federal law, rule or regulation.

4. In consideration of such tax exemption, the Sponsor, for so long as the partial tax exemption provided hereunder shall remain in effect, shall waive the benefits, if any, of additional or concurrent real property tax abatement and/or tax exemption which may be authorized under any existing or future local, state, or federal law, rule or regulation.

JULISSA FERRERAS, Chairperson; YDANIS A. RODRIGUEZ, JAMES VAN BRAMER, VANESSA L. GIBSON, COREY D. JOHNSON, MARK LEVINE, I. DANEEK MILLER, HELEN K. ROSENTHAL, VINCENT M. IGNIZIO; Committee on Finance, March 26, 2014.

On motion of the Speaker (Council Member Mark-Viverito), and adopted, the foregoing matter was coupled as a General Order for the day (see ROLL CALL ON GENERAL ORDERS FOR THE DAY).

Reports of the Committee on Land Use

Report for L.U. No. 18

Report of the Committee on Land Use in favor of approving Application no. 20145268 TCM, pursuant to §20-226 of the Administrative Code of the City of New York, concerning the petition of 567 Hudson Street, Inc., d/b/a White Horse Tavern, for a revocable consent to continue to maintain and operate an unenclosed sidewalk café located at 567 Hudson Street, in the Borough of Manhattan, Community District 2, Council District 3. This application is subject to review and action by the Land Use Committee only if called-up by vote of the Council pursuant to Rule 11.20b of the Council and §20-226(e) of the New York City Administrative Code.

The Committee on Land Use, to which the annexed Land Use item (with coupled resolution) was referred on February 26, 2014 (Minutes, page 538), respectfully

REPORTS:

SUBJECT

MANHATTAN CB - 2 **20145268 TCM**

Application pursuant to Section 20-226 of the Administrative Code of the City of New York, concerning the petition of 567 Hudson Street, Inc., d/b/a White Horse Tavern, for a revocable consent to continue to maintain and operate an unenclosed sidewalk café located at 567 Hudson Street.

INTENT

To allow an eating or drinking place located on a property which abuts the street to continue to maintain and operate an unenclosed service area on the sidewalk of such street.

PUBLIC HEARING

DATE: March 18, 2014

Witnesses in Favor: One **Witnesses Against:** None

SUBCOMMITTEE RECOMMENDATION

DATE: March 18, 2014

The Subcommittee recommends that the Land Use Committee approve the Petition.

In Favor: Weprin, Gentile, Williams, Wills, Richards, Reynoso, Ignizio
Against: *None* **Abstain:** *None*

COMMITTEE ACTION

DATE: March 20, 2014

The Committee recommends that the Council approve the attached resolution.

In Favor: Greenfield, Gentile, Palma, Arroyo, Dickens, Garodnick, Mealy, Mendez, Rodriguez, Koo, Lander, Levin, Weprin, Williams, Wills, Richards, Barron, Kallos, Reynoso, Torres, Treyger, Ignizio
Against: *None* **Abstain:** *None*

In connection herewith, Council Members Greenfield and Weprin offered the following resolution:

Res. No. 153

Resolution approving the petition for a revocable consent for an unenclosed sidewalk café located at 567 Hudson Street, Borough of Manhattan (20145268 TCM; L.U. No. 18).

By Council Members Greenfield and Weprin.

WHEREAS, the Department of Consumer Affairs filed with the Council on February 18, 2014 its approval dated February 18, 2014 of the petition of 567 Hudson Street, Inc., d/b/a White Horse Tavern, for a revocable consent to continue to maintain and operate an unenclosed sidewalk café located at 567 Hudson Street, Community District 2, Borough of Manhattan (the "Petition"), pursuant to Section 20-226 of the New York City Administrative Code (the "Administrative Code");

WHEREAS, the Petition is subject to review by the Council pursuant to Section 20-226(e) of the Administrative Code;

WHEREAS, upon due notice, the Council held a public hearing on the Petition on March 18, 2014; and

WHEREAS, the Council has considered the land use implications and other policy issues relating to the Petition;

RESOLVED:

Pursuant to Section 20-226 of the Administrative Code, the Council approves the Petition.

DAVID G. GREENFIELD, Chairperson; VINCENT J. GENTILE; ANNABEL PALMA, MARIA del CARMEN ARROYO, INEZ E. DICKENS, DANIEL R. GARODNICK, DARLENE MEALY, ROSIE MENDEZ, YDANIS A. RODRIGUEZ, PETER A. KOO, BRADFORD S. LANDER, STEPHEN T. LEVIN, MARK S. WEPRIN, JUMAANE D. WILLIAMS, RUBEN WILLS, DONOVAN J. RICHARDS, INEZ D. BARRON, BEN KALLOS, ANTONIO REYNOSO, RITCHIE J. TORRES, MARK TREYGER, VINCENT M. IGNIZIO; Committee on Land Use, March 20, 2014.

On motion of the Speaker (Council Member Mark-Viverito), and adopted, the foregoing matter was coupled as a General Order for the day (see ROLL CALL ON GENERAL ORDERS FOR THE DAY).

Report for L.U. No. 20

Report of the Committee on Land Use in favor of approving Application No. N 140099 ZRK submitted by the New York City Economic Development Corporation pursuant to Section 201 of the New York City Charter, for an amendment of the Zoning Resolution of the City of New York, pertaining to the regulations governing ferry and water taxi docking facilities in the Borough of Brooklyn, Community District 1, Council District 33.

The Committee on Land Use, to which the annexed Land Use item (with coupled resolution) was referred on February 26, 2014 (Minutes, page 538), respectfully

REPORTS:

SUBJECT

BROOKLYN CB - 1 **N 140099 ZRK**

City Planning Commission decision approving an application submitted by the New York City Economic Development Corporation pursuant to Section 201 of the New York City Charter, for an amendment of the Zoning Resolution of the City of New York, pertaining to the regulations governing ferry and water taxi docking facilities in Community District 1 in the Borough of Brooklyn.

INTENT

To amendment to the Zoning Resolution to establish a non-discretionary Chairperson Certification process to increase the capacity of ferry vessels permitted to dock in R6-R10 Residence Districts, Commercial and Manufacturing Districts along Brooklyn Community District 1 waterfront. It will also waive parking and drop-off/pick-up requirements, and require that applicants meet site design standards to ensure harmonious interaction between ferry docks and waterfront public access areas.

PUBLIC HEARING

DATE: March 4, 2014

Witnesses in Favor: Three **Witnesses Against:** None

SUBCOMMITTEE RECOMMENDATION

DATE: March 4, 2014

The Subcommittee recommends that the Land Use Committee approve the decision of the City Planning Commission.

In Favor: Weprin, Garodnick, Williams, Wills, Reynoso, Torres, Ignizio
Against: *None* **Abstain:** *None*

COMMITTEE ACTION

DATE: March 20, 2014

The Committee recommends that the Council approve the attached resolution.

In Favor: Greenfield, Gentile, Palma, Arroyo, Dickens, Garodnick, Mealy, Mendez, Rodriguez, Koo, Lander, Levin, Weprin, Williams, Wills, Richards, Barron, Kallos, Reynoso, Torres, Treyger, Ignizio
Against: *None* **Abstain:** *None*

In connection herewith, Council Members Greenfield and Weprin offered the following resolution:

Res. No. 154

Resolution approving the decision of the City Planning Commission on Application No. N 140099 ZRK, for an amendment of the Zoning Resolution of the City of New York, pertaining to the regulations governing ferry and water taxi docking facilities in Community District 1 in the Borough of Brooklyn (L.U. No. 20).

By Council Members Greenfield and Weprin.

WHEREAS, the City Planning Commission filed with the Council on February 7, 2014 its decision dated February 5, 2013 (the "Decision"), pursuant to Section 201 of the New York City Charter, regarding an application submitted by the New York City Economic Development Corporation, for an amendment of the text of the Zoning Resolution of the City of New York, establishing a non-discretionary Chairperson certification process to increase the capacity of ferry vessels permitted to dock in R6-R10 Residence Districts, as well as all Commercial and Manufacturing Districts along the Brooklyn Community District 1 waterfront. The proposed certification also would waive parking and drop-off/pick-up requirements, and would require that applicants meet site design standards to ensure harmonious interaction between ferry docks and waterfront public access areas (Application No. N 140099 ZRK), Community District 1, Borough of Brooklyn (the "Application");

WHEREAS, the Decision is subject to review and action by the Council pursuant to Section 197-d(b)(1) of the City Charter;

WHEREAS, upon due notice, the Council held a public hearing on the Decision and Application on March 4, 2014;

WHEREAS, the Council has considered the land use implications and other policy issues relating to the Decision and Application; and

WHEREAS, the Council has considered the relevant environmental issues, the negative declaration (CEQR No. 13DME009Y) issued on October 16, 2013 (the "Negative Declaration");

RESOLVED:

The Council finds that the action described herein will have no significant impact on the environment as set forth in the Negative Declaration.

Pursuant to Sections 197-d and 200 of the City Charter and on the basis of the Decision and Application, and based on the environmental determination and consideration described in this report, N 140099 ZRK, incorporated by reference herein, the Council approves the Decision.

The Zoning Resolution of the City of New York, effective as of December 15, 1961, and as subsequently amended, is further amended as follows:

Matter in underline is new, to be added;
Matter in ~~strikeout~~ is to be deleted;
Matter with # # is defined in Section 12-10;
* * * indicates where unchanged text appears in the Zoning Resolution

Article II
Residence District Regulations

* * *

Chapter 2
Use Regulations

* * *

22-00
GENERAL PROVISIONS

In order to carry out the purposes and provisions of this Resolution, the #uses# of #buildings or other structures# and the open #uses# of #zoning lots#, or portions thereof, have been classified and combined into Use Groups. A brief statement is inserted at the start of each Use Group to describe and clarify the basic characteristics of that Use Group. Use Groups 1, 2, 3, ~~and~~ 4 and 6, including each #use# listed separately therein, are permitted in #Residence Districts# only as indicated in Sections 22-11 to ~~22-14~~ 22-15, inclusive.

The following chart sets forth the Use Groups permitted in the #Residence Districts#.

* * *

Whenever a #use# is specifically listed in a Use Group and also could be construed to be incorporated within a more inclusive #use# listing, either in the same or another Use Group, the more specific listing shall control.

The #uses# listed in the various Use Groups set forth in Sections 22-11 to ~~22-14~~22-15, inclusive, are also listed in alphabetical order in the Index at the end of this Resolution for the convenience of those using this Resolution. Whenever there is any difference in meaning or implication between the text of these Use Groups and the text of the Index, the text of these Use Groups shall prevail.

* * *

22-10
USES PERMITTED AS-OF-RIGHT

* * *

22-15
Use Group 6C

R6 R7 R8 R9 R10

In the districts indicated, when located within Community District 1 in the Borough of Brooklyn, Use Group 6C, as set forth in Section 32-15 (Use Group 6), shall be limited to docks for ferries, other than #gambling vessels#, with a vessel capacity of up to 399 passengers, and docks for water taxis, with a vessel capacity of up to 99 passengers, provided that such docks are certified by the Chairperson of the City Planning Commission, pursuant to Section 62-813 (Docking facilities for ferries or water taxis in certain waterfront areas). Vessel capacity is the U.S. Coast Guard certified capacity of the largest vessel using a dock.

* * *

22-20
USES PERMITTED BY SPECIAL PERMIT

* * *

22-22
By the City Planning Commission

In the districts indicated, the following #uses# are permitted by special permit of the City Planning Commission, in accordance with standards set forth in Article VII, Chapter 4, or as otherwise indicated in this Section.

R3 R4 R5 R6 R7 R8 R9 R10

Docks for ferries or water taxis as listed in Use Group 6 pursuant to Section 62-832 (Docks for ferries or water taxis in Residence Districts), except in R6 through R10 Districts in Community District 1 in the Borough of Brooklyn.

* * *

Article III
Commercial District Regulations

* * *

Chapter 2
Use Regulations

* * *

32-10
USES PERMITTED AS-OF-RIGHT

* * *

32-15
Use Group 6
C1 C2 C4 C5 C6 C8

* * *

C. Retail or Service Establishments

* * *

Clothing rental establishments, limited to 10,000 square feet of #floor area# per establishment [PRC-B]

Docks for ferries, other than #gambling vessels#, limited to an aggregate operational passenger load, per #zoning lot#, of 150 passengers per half hour. In Community District 1 in the Borough of Brooklyn, docks for ferries with a vessel capacity of up to 399 passengers shall be allowed, provided that such docks are certified by the Chairperson of the City Planning Commission pursuant to Section 62-813 (Docking facilities for ferries or water taxis in certain waterfront areas).The maximum dock capacity is the U.S. Coast Guard certified capacity of the largest vessel using the dock. [PRC-H]

Docks for water taxis, with a vessel capacity of up to 99 passengers. ~~with vessel capacity limited to 99 passengers~~ In Community District 1 in the Borough of Brooklyn, such docks shall be certified by the Chairperson of the City Planning Commission pursuant to Section 62-813 (Docking facilities for ferries or water taxis in certain waterfront areas). The maximum dock capacity is the U.S. Coast Guard certified capacity of the largest vessel using the dock.

Docks or mooring facilities for non-commercial pleasure boats [PRC-H]

* * *

32-19
Use Group 10

C4 C5 C6 C8

* * *

A. Retail or Service Establishments

* * *

Depositories for storage of office records, microfilm or computer tapes, or for data processing [PRC-G]

Docks for ferries, other than #gambling vessels#, with no restriction on passenger load. In Community District 1 in the Borough of Brooklyn, such docks shall be certified by the Chairperson of the City Planning Commission, pursuant to Section 62-813 (Docking facilities for ferries or water taxis in certain waterfront areas). [PRC-H]

Dry goods or fabric stores, with no limitation on #floor area# per establishment [PRC-B]

* * *

32-23
Use Group 14

C2 C3 C7 C8

Use Group 14 consists of the special services and facilities required for boating and related activities.

(a) Retail or Service

* * *

Candy or ice cream stores [PRC-B]

Docks for ferries, other than #gambling vessels#, limited to an aggregate operational passenger load, per #zoning lot#, of 150 passengers per half hour. In Community District 1 in the Borough of Brooklyn, docks for ferries with a vessel capacity of up to 399 passengers shall be allowed, provided that such docks are certified by the Chairperson of the City Planning Commission pursuant to Section 62-813 (Docking facilities for ferries or water taxis in certain waterfront areas). [PRC-H]

Docks for sightseeing, excursion or sport fishing vessels, other than #gambling vessels#, limited to the following aggregate dock capacities per #zoning lot#:

200 in C2, C3 Districts; 500 in C7, C8-1, C8-2, C8-3 Districts; 2,500 in C8-4 Districts.

"Dock capacity" is the U.S. Coast Guard certified capacity of the largest vessel using a dock. "Aggregate dock capacity" is the sum of the dock capacities of all docks on the #zoning lot#.

Docks for water taxis, with a vessel capacity of up to 99 passengers. ~~with vessel capacity~~ ~~limited to 99 passengers~~ In Community District 1 in the Borough of Brooklyn, such docks shall be certified by the Chairperson of the City Planning Commission pursuant to Section 62-813 (Docking facilities for ferries or water taxis in certain waterfront areas). The maximum dock capacity is the U.S. Coast Guard certified capacity of the largest vessel using the dock.

Docks or mooring facilities for non-commercial pleasure boats [PRC-H]

* * *

Article VI
Special Regulations Applicable To Certain Areas

Chapter 2
Special Regulations Applying in the Waterfront Area

* * *

62-50
GENERAL REQUIREMENTS FOR VISUAL CORRIDORS AND WATERFRONT PUBLIC ACCESS AREAS

* * *

62-52
Applicability of Waterfront Public Access Area Requirements

Waterfront public access shall be provided for all #waterfront zoning lots# with a #lot area# of at least 10,000 square feet and a #shoreline# of at least 100 feet that are #developed#, and for all #developments# on #floating structures#, in accordance with the provisions of the following Sections:

* * *

(b) #Waterfront public access areas# required in conjunction with the following #developments# shall be subject to the minimum #waterfront public access area# set forth in the table in Section 62-57 and the requirements of Section 62-58 (Requirements for Water-Dependent Uses and Other Developments):

(1) #developments# comprised #predominantly# of the following WD #uses#: docks for non-commercial pleasure boats, ferries, sightseeing, excursion or sport fishing vessels, #boatels# or commercial beaches;

(2) #developments# on #piers# or #platforms# that involve existing #buildings or other structures# that are either New York City-designated landmarks or have been calendared for consideration, or are listed or eligible to be listed in the National or New York State Registers of Historic Places; or

(3) changes of #use# or #extensions# within #buildings# existing on October 25, 1993, which involve, in aggregate, an amount of #floor area# that is less than 30 percent of the maximum #floor area# permitted on the #zoning lot# for either #commercial# or #residential use#, whichever is greater.

In Community District 1 in the Borough of Brooklyn, on #zoning lots# with #developments# comprised exclusively of docks for ferries with a vessel capacity of up to 399 passengers, and #accessory# amenities for such docking facilities, such #zoning lots# shall be exempt from the waterfront public access requirements of this Section, provided that such docking facilities are certified by the Chairperson of the City Planning Commission, pursuant to Section 62-813 (Docking facilities for ferries or water taxis in certain waterfront areas). However, for any subsequent #development# on such #zoning lot# that is not comprised exclusively of docks for ferries, the public access requirements of this Section shall apply, and any public access exemptions for such docks for ferries shall no longer apply.

* * *

62-60
DESIGN REQUIREMENTS FOR WATERFRONT PUBLIC ACCESS AREAS

* * *

62-611
Permitted obstructions

#Waterfront public access areas# shall be unobstructed from their lowest level to the sky except that the obstructions listed in this Section shall be permitted, as applicable. However, no obstructions of any kind shall be permitted within a required circulation path.

(a) In all areas

* * *

(c) Beyond 20 feet of the #shoreline#

Tot-lots, playgrounds, dog runs, public telephones, toilets, bicycle racks.

(d) In Community District 1 in the Borough of Brooklyn

In Community District 1 in the Borough of Brooklyn, any amenity #accessory# to docking facilities for ferries or water taxis shall be considered a permitted obstruction only where such amenity is certified by the Chairperson of the City Planning Commission in conjunction with the docking facility, pursuant to Section 62-813 (Docking facilities for ferries or water taxis in certain waterfront areas).

* * *

62-63
Design Requirements for Public Access on Piers and Floating Structures

62-631
Design requirements for public access on piers

The design requirements of this Section shall apply to #waterfront public access areas# on #piers#, pursuant to Section 62-54.

(a) Circulation and access

At least one circulation path having a minimum clear width of ten feet shall be provided throughout the public access area required on the #pier#.

(b) Permitted obstructions

In addition to permitted obstructions pursuant to Section 62-611, #pier# public access areas may include one freestanding open or enclosed public pavilion, provided such structure does not exceed one #story#, is no taller than 30 feet and has an area no larger than 1,600 square feet. At least 50 percent of the perimeter wall area on all sides, up to a height of 15 feet, shall consist of clear or glazed materials which may include #show windows#, glazed transoms, glazed portions of doors or latticework. Such structures shall be exempt from #building# spacing requirements on #piers# provided they maintain a spacing of at least 12 feet from other #buildings# and from any water edge of the #pier#, except that when a #pier# is 30 feet or less in width, a pavilion may abut one water edge.

In Community District 1 in the Borough of Brooklyn, any amenity #accessory# to docking facilities for ferries or water taxis shall be considered a permitted obstruction only where such amenity is certified by the Chairperson of the City Planning Commission in conjunction with the docking facility, pursuant to Section 62-813 (Docking facilities for ferries or water taxis in certain waterfront areas).

(c) Seating

At least one linear foot of seating is required for every 100 square feet of #pier# public access area, subject to the provisions of paragraphs (a) through (d) of Section 62-652.

* * *

62-80
SPECIAL REVIEW PROVISIONS

* * *

62-81
Certifications by the Chairperson of the City Planning Commission

* * *

62-813
Docking facilities for ferries or water taxis in certain waterfront areas

In Community District 1 in the Borough of Brooklyn, docking facilities for ferries or water taxis set forth in paragraph (a) of this Section shall be permitted, provided that the Chairperson of the City Planning Commission certifies to the Commissioner of the Department of Buildings that such docking facilities comply with the standards for required amenities set forth in paragraph (b) of this Section and, where provided, the standards for permitted amenities set forth in paragraph (c) of this Section. In conjunction with such certification, parking and drop-off and pick-up area requirements for docking facilities with a vessel capacity of up to 399 passengers shall be waived, as applicable. Where such docking facilities are proposed within a #waterfront public access area#, such docking facilities shall also comply with the provisions of paragraph (d) of this Section. Where modifications to a docking facility certified pursuant this Section are made, including the amount or configuration of docking facility amenities, establishment of, or modification to, #waterfront public access areas# on the same #waterfront zoning lot#, or the cessation of ferry or water taxi service to such docking facility, the provisions of paragraph (e) of this Section shall apply.

The amount of amenities permitted or required pursuant to paragraphs (b) and (c) of this Section shall be calculated for each docking facility on the #waterfront zoning lot# and not according to the number of vessels a single docking facility can accommodate.

(a) Docking facilities

The following docking facilities are subject to the certification provisions of this Section:

(1) docks for water taxis, with a vessel capacity of up to 99 passengers, as listed in Use Group 6C, when located within R6 through R10 Districts, or C1, C2, C4, C5, C6 or C8 Districts, and as listed in Use Group 14A, when located in C2, C3, C7 or C8 Districts and #Manufacturing Districts#;

(2) docks for ferries, other than #gambling vessels#, with a vessel capacity of up to 399 passengers, as listed in Use Group 6C, when located within R6 through R10 Districts or C1, C2, C4, C5, C6 or C8 Districts, and as listed in Use Group 14A, when located in C2, C3, C7 or C8 Districts and #Manufacturing Districts#; and

(3) docks for ferries with an unlimited capacity, as listed in Use Group 10A, in C4, C5, C6, C8 Districts and #Manufacturing Districts#.

(b) Required amenities

Passenger queuing space, bicycle parking and a trash receptacle shall be provided in accordance with the applicable provisions of this paragraph, (b), inclusive. All applications shall include a site plan denoting the location of each required amenity, dimensioned plans and elevations of individual amenities, as applicable, as well as any other material required to demonstrate compliance with such provisions.

(1) Passenger queuing space

Passenger queuing space shall be provided in accordance with the provisions of this paragraph, (b)(1), inclusive.

(i) Amount

A minimum of four square feet of queuing space per passenger shall be provided on the #waterfront zoning lot# for 40 percent of the U.S. Coast Guard certified passenger capacity of the largest vessel proposed to dock at such facility. Queuing space may be either standing space or seating space, and may be either open to the sky or provided within a sheltered space for passengers in accordance with the provisions of paragraph (c)(1), inclusive, of this Section.

(ii) Standing space

All standing queuing space shall be contiguous and clear of obstructions, except for any interruption by circulation paths required for access to docking facilities through a gangway, or pier access thereto. However, such standing queuing space may be non-contiguous and temporary dividers may be permitted as obstructions within such queuing space where the applicant signs an affidavit, or provides materials demonstrating in a manner that is satisfactory to the Chairperson, that an attendant will manage queues whenever such measures are implemented.

(iii) Seating space

A minimum of ten percent of required queuing space shall be provided as seating, and up to 50 percent of required queuing space may be provided as seating. However, no seating shall be required within a previously approved #waterfront public access area#. For the purpose of applying seating towards the queuing requirement, one linear foot of seating shall equal one square foot of queuing space.

All seating provided for queuing space shall comply with the applicable dimensional criteria of Section 62-652 (Seating), but need not comply with the percentage requirements for different types of seating required pursuant to such Section. However, moveable chairs shall not constitute seating for queuing.

Any seating space provided pursuant to this Section within an existing or proposed #waterfront public access area# shall not count towards the maximum amount of seating permitted to be located seaward of the #shore public walkway# pursuant to paragraph (b) of Section 62-62 (Design Requirements for Shore Public Walkways and Supplemental Public Access Areas).

(iv) Location

Queuing space shall be provided on the #waterfront zoning lot# within 150 feet of the landward terminus of the gangway leading to the docking facility.

(2) Bicycle parking

Bicycle racks sufficient to provide at least four bicycle parking spaces shall be provided on the #waterfront zoning lot#. Such bicycle racks shall comply with the standards of Section 62-657.

(3) Trash receptacle

One trash receptacle shall be provided on the #waterfront zoning lot# within 25 feet of the landward terminus of the gangway leading to the docking facility. Such trash receptacle shall comply with the standards of Section 62-658.

(c) Permitted amenities

Passenger queuing shelters and ticketing machines may be provided only in accordance with the applicable standards of this paragraph, (c), or, where applicable, the authorization provisions set forth in Section 62-824 (Modifications to passenger queuing shelters for ferry or water taxi docking facilities).

All applications shall include a site plan denoting the location of such amenities, dimensioned plans and elevations of individual amenities, as well as any other material required to demonstrate compliance with the following standards:

(1) Passenger queuing shelter

Where provided, passenger queuing shelters shall comply with the provisions of this paragraph, (c)(1), inclusive. All heights are measured from adjoining grade.

(i) Maximum dimensions and permitted enclosing walls

The maximum height of a shelter shall be ten feet. Below a height of seven feet, the maximum width shall be four feet, and above a height of seven feet, the maximum width shall be eight feet. The maximum length of a shelter shall not exceed 16 feet, except that where a ticketing machine provided pursuant to paragraph (c)(2) of this Section is located within such shelter, such maximum length may be increased to 20 feet.

Shelters shall be permitted a total of three enclosing walls, one along the long dimension of the shelter, and one along each narrow end.

(ii) Support structures below the roof

A maximum of two vertical columns may support the enclosing walls and the roof of a shelter, except that where a ticketing machine provided pursuant to paragraph (c)(2) of this Section is located within such shelter, an additional column shall be permitted. The maximum width and depth of such columns shall not exceed twelve inches. All such columns shall be aligned so that when viewed in elevation view along the narrow end of the shelter, only one column shall be visible.

Below a height of 30 inches, one horizontal structural element shall be permitted along the long dimension of the shelter. The maximum depth and height of such structural element shall not exceed twelve inches. Between a height of 30 inches and seven feet no horizontal structural elements shall be permitted, and above a height of seven feet, horizontal structural elements shall be considered part of the roof structure.

Additional support structures needed to support glazing in the enclosing walls are permitted, provided that such structures are to the minimum amount necessary.

(iii) Roof structure

The roof of the shelter, including all associated structural elements and materials, shall be located above a height of seven feet.

The maximum depth of the roof, including all associated structural elements and materials, shall not exceed twelve inches, as measured perpendicular to the roof surface. In addition, within six inches of the edge of any portion of the roof that cantilevers over passenger queuing space, as viewed in elevation along the narrow end of the shelter, the depth of the roof shall be limited to three inches.

No slopes or curves shall be permitted in the roof along the long dimension of the shelter. Along the narrow end of the shelter, slopes not to exceed fifteen degrees and curves with a radius of at least ten feet shall be permitted. Where two slopes are provided, in no event shall both portions of the roof angle downward from the same point.

(iv) Materials, lighting and permitted signage

On each narrow end of the shelter, the enclosing wall or associated vertical support column may accommodate up to six square feet of way-finding ferry #signs#, with a width not to exceed twelve inches. In addition, the enclosing wall on the long end of the shelter or a face of a ticketing machine provided in accordance with paragraph (c)(2) of this Section may accommodate up to six square feet of materials related to ferry operations, including maps and schedules of ferry service. No #advertising signs# shall be permitted.

All structural elements shall be composed of unpainted, metallic materials. The entire surface area of all enclosing walls shall be composed of untinted, transparent materials, except for transparency distraction markers and any support structures or signage permitted pursuant to this paragraph, (c)(1). A minimum of 50 percent of the surface area of the roof shall be composed of translucent materials, except that any portion occupied by solar panels shall be excluded from such calculation. Benches provided within a shelter shall either match or complement such shelter materials.

Where lighting is provided within a shelter, the luminaire shall be shielded so the light source is not visible.

(v) Location and orientation

Shelters shall be provided on the #waterfront zoning lot# within 100 feet of the landward terminus of the gangway leading to the docking facility.

The long dimension of the shelter shall be oriented so as to be within 15 degrees of being perpendicular to the shoreline or, where located on a pier, within 15 degrees of being parallel to such pier.

Where a shelter is provided within a previously approved #waterfront public access area#, the Chairperson may modify the location and orientation provisions of this Section, to the minimum extent necessary, where site limitations would make compliance with such provisions infeasible.

(2) Ticketing machines

Ticketing machines provided in conjunction with a docking facility shall comply with the provisions of this paragraph, (c)(2).

(i) Maximum square footage

The maximum area of all ticket machines, as measured in plan around the furthest extent of such machines, shall not exceed 12 square feet.

(ii) Location

Ticketing machines shall be provided on the #waterfront zoning lot# within 100 feet of the landward terminus of the gangway leading to the docking facility.

Where a passenger queuing shelter is provided in conjunction with the ferry or water taxi docking facility pursuant to paragraph (c)(1) of this Section, ticketing machines shall be located either within, or immediately adjacent to the upland portion of such shelter.

Any ticketing machine not placed within a passenger queuing shelter shall be placed in a location open to the sky.

Ticketing machines shall either front directly upon a required circulation path or shall be connected thereto by a walkway with an unobstructed minimum clear width of at least five feet.

Where a ticketing machine is provided within a previously approved #waterfront public access area#, the Chairperson may modify the location provisions of this Section, to the minimum extent necessary, where site limitations would make compliance with such provisions infeasible.

(d) Provisions for adding amenities for docking facilities to a #waterfront public access area#

Docking facilities proposed within a previously approved #waterfront public access area# or in conjunction with a certification for such approval, pursuant to Section 62-811 (Waterfront public access areas and visual corridors), shall comply with the applicable provisions of this paragraph, (d).

(1) Permitted obstructions

In no event shall amenities provided pursuant to paragraphs (b) or (c) of this Section be permitted to encroach upon the minimum circulation paths required pursuant to the applicable provisions of Sections 62-62 (Design Requirements for Shore Public Walkways and Supplemental Public Access Areas), 62-63 (Design Requirements for Public Access on Piers and Floating Structures), and 62-64 (Design Requirements for Upland Connections).

(2) Providing amenities in previously approved #waterfront public access areas#

All seating, bicycle parking and trash receptacles provided for docking facilities in accordance with the provisions of paragraph (b) of this Section, within a previously approved #waterfront public access area#, shall be provided in addition to the amount of seating, bicycle parking, or trash receptacles required for such #waterfront public access area# pursuant to the applicable provisions of Section 62-60 (DESIGN REQUIRMENTS FOR WATERFRONT PUBLIC ACCESS AREAS). Where excess seating, bicycle parking or trash receptacles have been provided within such previously approved #waterfront public access areas#, such additional amenities may be applied towards compliance with the provisions for docking facilities of this Section, provided that such amenities comply with the applicable provisions of paragraph (b) of this Section. Where previously approved #waterfront public access areas# are #non-complying# as to the provision of required amenities, in no event shall the minimum amount of amenity provided for docking facilities pursuant to paragraph (b) reduce the degree of #non-compliance# of such #waterfront public access area#.

All seating, bicycle parking and trash receptacles provided in accordance with the provisions of paragraph (b) of this Section in an existing #waterfront public access area# shall either match or shall be comparable with such existing amenities, with regard to quality, materials, finishes, and form.

Modifications to a previously approved #waterfront public access area# in order to accommodate amenities to be provided for a docking facility in accordance with paragraphs (b) or (c) of this Section shall not constitute a design change to such #waterfront public access area#, and shall not necessitate a new certification pursuant to Section 62-811, provided that the applicant demonstrates to the Chairperson of the City Planning Commission that such modifications are to the minimum extent necessary in order to accommodate the amenities being provided for such docking facility.

(3) Providing amenities in conjunction with a new #waterfront public access area#

All amenities provided for docking facilities in accordance with the provisions of paragraph (b) of this Section shall be provided in addition to all required seating, bicycle parking, or trash receptacles for a #waterfront public access area# being #developed# in conjunction with the provision of a docking facility. All such proposed amenities for the docking facility shall complement the proposed amenities for such #waterfront public access area#.

(e) Modifications of certified docking facilities

Any modification to a docking facility certified pursuant to this Section, shall comply with the applicable provisions of this paragraph, (e).

(1) Modification of amenities

Any modification of the required or permitted amenities for a docking facility certified pursuant to this Section, including the configuration of such amenities, shall be subject to a new certification pursuant to this Section.

Any ferry or water taxi service modification resulting in a reduction of passenger capacity of the largest vessel docking at such facility shall not be subject to a new certification provided that the amount of queuing space required at the time of approval, pursuant to paragraph (b) of this Section, is not diminished.

(2) Establishment of or modifications to #waterfront public access areas#

Any establishment of a #waterfront public access area# or modification to a previously approved #waterfront public access area# where a docking facility certified pursuant to this Section is located, shall require a new certification, pursuant to this Section, in conjunction with the certification set forth in Section 62-811 (Waterfront public access areas and visual corridors).

(3) Cessation of ferry or water taxi service

Where ferry or water taxi service ceases operations to a docking facility certified pursuant to this Section, and ferry docking infrastructure is removed from the #waterfront zoning lot# which would preclude further service, the following shall apply:

(i) Passenger queuing shelters and ticketing machines provided pursuant to paragraph (c) of this Section shall be removed from the #waterfront public access area#;

(ii) Seating, bicycle racks, and litter receptacles provided pursuant to paragraph (b) of this Section need not be removed; and

(iii) any breach in a guardrail along a #pier# or along the #shore public walkway# to accommodate a gangway to a docking facility shall be repaired and shall match the adjacent guardrail.

* * *

62-82
Authorizations by the City Planning Commission

62-821
Modification of requirements for ferries and sightseeing, excursion or sport fishing vessels

(a) In C1, C2, C3 and C7 Districts, the City Planning Commission may authorize modification of the #use# regulations of Section 32-10 (USES PERMITTED AS-OF-RIGHT) in order to allow docks for ferries with an operational passenger load greater than 150 passengers per half hour, or in Community District 1 in the Borough of Brooklyn, a vessel capacity larger than 399 passengers, provided the Commission finds that:

(1) such facility will not create serious pedestrian or vehicular traffic congestion that would adversely affect the surrounding area;

(2) the #streets# providing access to such facility will be adequate to handle the traffic generated thereby; and

(3) such #use# is so located as to draw a minimum of vehicular traffic to and through local #streets# in adjoining residential areas.

* * *

62-824
Modifications to passenger queuing shelters for ferry or water taxi docking facilities

In Community District 1 in the Borough of Brooklyn, the City Planning Commission may authorize a ferry passenger queuing shelter exceeding the dimensions set forth in paragraph (c)(1) of Section 62-813 (Docking facilities for ferries or water taxis in certain waterfront areas), provided that the Commission finds that:

(a) the public benefit derived from the proposed shelter merits the larger dimensions authorized;

(b) the proposed shelter utilizes the design standards set forth in paragraph (c)(1) of Section 62-813 regarding permitted support structures, materials, signage and roof construction to the greatest extent feasible;

(c) any modification to such provisions of Section 62-813 will not unduly limit views from the #waterfront public access area#; and

(d) the design of the proposed shelter will result in a quality structure that complements the #waterfront public access area# or the publicly accessible area of a #waterfront zoning lot# accommodating the ferry or water taxi docking facility.

62-83
Special Permits by the City Planning Commission

* * *

62-832
Docks for ferries or water taxis in Residence Districts

In all #Residence Districts#, except R1 and R2 Districts, and except within Community District 1 in the Borough of Brooklyn, where the certification provisions of Section 62-813 (Docking facilities for ferries or water taxis in certain waterfront areas) shall apply, the City Planning Commission may permit docks for ferries or water taxis as listed in Use Group 6~~.~~, provided that:

~~As a condition for granting a special permit, the Commission shall find that:~~

(a) such facility will not create serious pedestrian or vehicular traffic congestion that would adversely affect surrounding residential #streets#;

(b) such #use# is so located as to draw a minimum of vehicular traffic to and through local #streets# in the adjoining residential area;

(c) there is appropriate landscaping along #lot lines# to enable such #use# to blend harmoniously with the adjoining residential area;

(d) #accessory# off-street parking spaces are provided in accordance with Section 62-43 (Parking Requirements for Commercial Docking Facilities) and the entrances and exits for such #accessory# parking facilities are so located as to not adversely affect #residential# properties fronting on the same #street#; and

(e) such #use# will not impair the character or the future use or development of the surrounding residential area.

The Commission may prescribe additional appropriate conditions and safeguards to minimize adverse effects on the character of the surrounding area and to protect #residential# properties which are adjoining or across the #street# from the facility. Such additional conditions and safeguards may include provisions for temporary parking of vehicles for passenger drop-off and pick-up, additional #accessory# off-street parking spaces and limitations on lighting and signage.

* * *

62-90
WATERFRONT ACCESS PLANS

* * *

62-93
Borough of Brooklyn

The following Waterfront Access Plans are hereby established within the Borough of Brooklyn. All applicable provisions of Article VI, Chapter 2, remain in effect within the areas delineated by such plans, except as expressly set forth otherwise in the plans:

BK-1: Greenpoint-Williamsburg, as set forth in Section 62-931.

62-931
Waterfront Access Plan BK-1: Greenpoint-Williamsburg

Maps BK-1a through BK-1c in paragraph (f) of this Section show the boundaries of the area comprising the Greenpoint-Williamsburg Waterfront Access Plan and the location of certain features mandated or permitted by the Plan. The plan area has been divided into parcels consisting of tax blocks and lots and other lands as established on May 11, 2005, as follows:

* * *

(c) Public access design reference standards

Section 62-65 is hereby modified by the following provisions.

(1) Guardrails

In addition to the provisions of paragraph (a) of Section 62-651 (Guardrails, gates and other protective barriers), guardrails shall comply with Illustration A1 of this Section.

[DELETE EXISTING ILLUSTRATION]

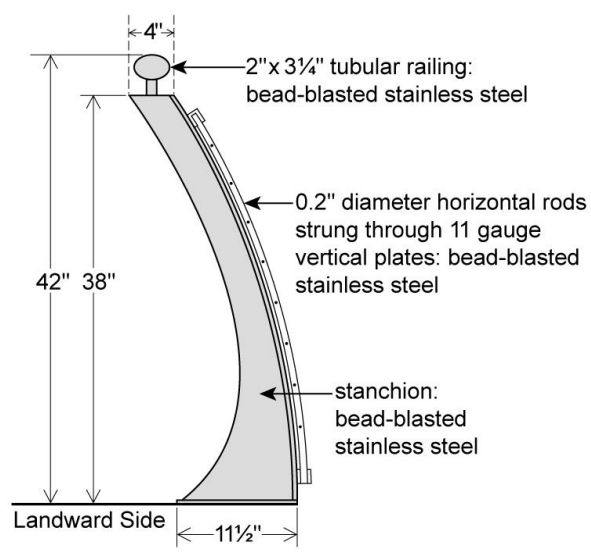

GUARDRAIL
Side Elevation

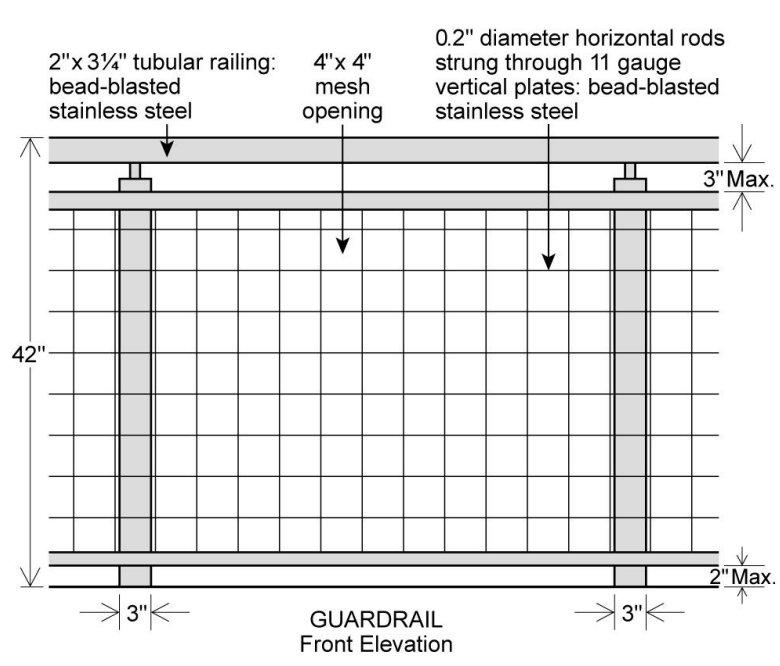

GUARDRAIL
Front Elevation

[REPLACE WITH THIS ILLUSTRATION]

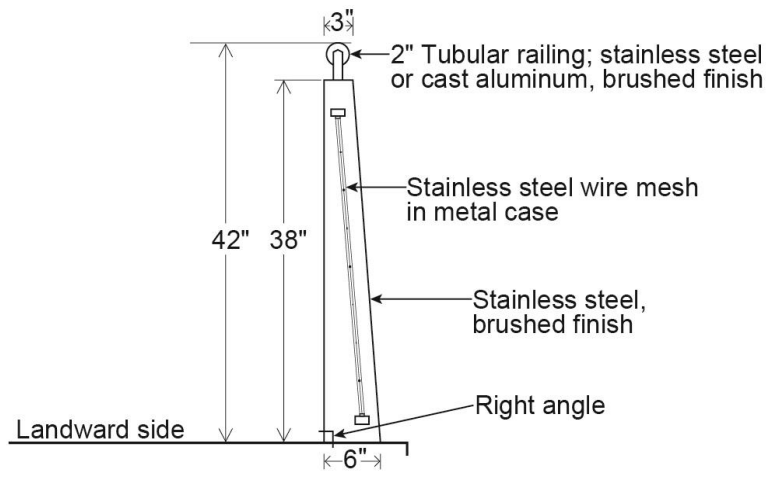

GUARDRAIL WITH METAL TOP
Side Elevation

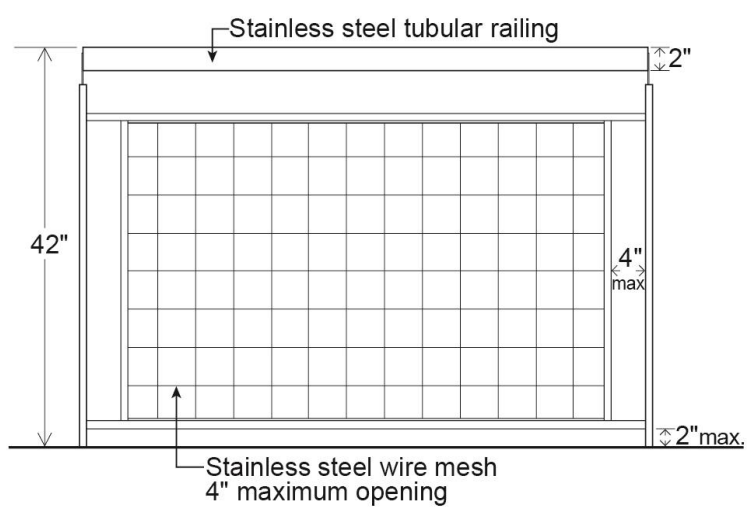

GUARDRAIL WITH METAL TOP
Front Elevation

Illustration A1

All guardrail components and hardware shall be in No. 316 Stainless Steel, passivated and bead blasted.

~~(2) Seating~~

~~In addition to the provisions of Section 62-652, at least 50 percent of the required seating along any #shore public walkway# or #supplemental public access area# shall comply with Illustration B1 or B2 in this Section.~~

[DELETE EXISTING ILLUSTRATIONS]

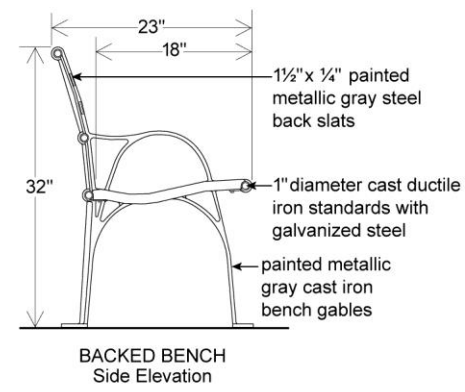

BACKED BENCH
Side Elevation

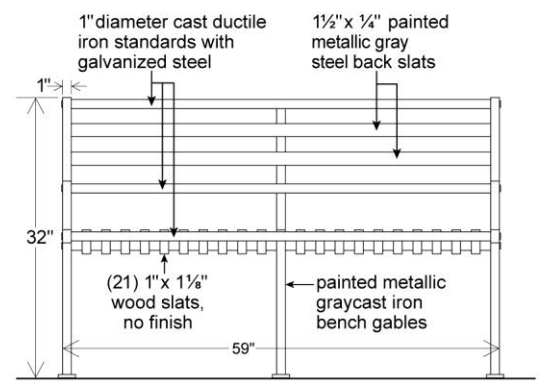

BACKED BENCH
Front Elevation

~~Illustration B1~~

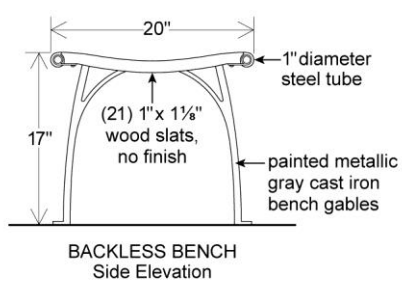

BACKLESS BENCH
Side Elevation

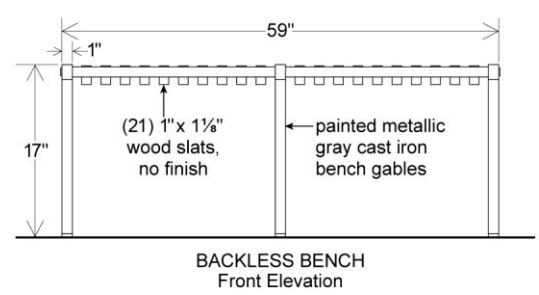

BACKLESS BENCH
Front Elevation

~~Illustration B2~~

~~All wood boards shall be made of domestically grown non-tropical hardwoods, such as American White Oak (Quercus alba), and be treated for external use without stain or varnish.~~

~~(3)~~(2) Lighting

In addition to the illumination provisions of Section 62-653, the required lighting along any public access area shall comply with Illustration C1 in this Section.

* * *

~~(4)~~(3) Paving

In addition to the provisions of Section 62-656, the paving for the required clear path within the #shore public walkway# shall be gray. At least 50 percent of all other paved areas within the #shore public walkway# and #supplemental public access areas# shall be paved in the same color range.

* * *

DAVID G. GREENFIELD, Chairperson; VINCENT J. GENTILE; ANNABEL PALMA, MARIA del CARMEN ARROYO, INEZ E. DICKENS, DANIEL R. GARODNICK, DARLENE MEALY, ROSIE MENDEZ, YDANIS A. RODRIGUEZ, PETER A. KOO, BRADFORD S. LANDER, STEPHEN T. LEVIN, MARK S. WEPRIN, JUMAANE D. WILLIAMS, RUBEN WILLS, DONOVAN J. RICHARDS, INEZ D. BARRON, BEN KALLOS, ANTONIO REYNOSO, RITCHIE J. TORRES, MARK TREYGER, VINCENT M. IGNIZIO; Committee on Land Use, March 20, 2014.

On motion of the Speaker (Council Member Mark-Viverito), and adopted, the foregoing matter was coupled as a General Order for the day (see ROLL CALL ON GENERAL ORDERS FOR THE DAY).

Report for L.U. No. 21

Report of the Committee on Land Use in favor of approving Application no. 20145310 TCM, pursuant to §20-226 of the Administrative Code of the City of New York, concerning the petition of 98 Kenmare Restaurant Group LLC, d/b/a Maison O, for a revocable consent to establish, maintain and operate an unenclosed sidewalk café located at 98 Kenmare Street, in the Borough of Manhattan, Community District 2, Council District 1. This application is subject to review and action by the Land Use Committee only if called-up by vote of the Council pursuant to Rule 11.20b of the Council and §20-226(e) of the New York City Administrative Code.

The Committee on Land Use, to which the annexed Land Use item (with coupled resolution) was referred on February 26, 2014 (Minutes, page 539), respectfully

REPORTS:

SUBJECT

MANHATTAN CB - 2 **20145310 TCM**

Application pursuant to Section 20-226 of the Administrative Code of the City of New York, concerning the petition of 98 Kenmare Restaurant Group LLC, d/b/a Maison O, for a revocable consent to establish, maintain and operate an unenclosed sidewalk café located at 98 Kenmare Street.

INTENT

To allow an eating or drinking place located on a property which abuts the street to establish, maintain and operate an unenclosed service area on the sidewalk of such street.

PUBLIC HEARING

DATE: March 18, 2014

Witnesses in Favor: One **Witnesses Against:** None

SUBCOMMITTEE RECOMMENDATION

DATE: March 18, 2014

The Subcommittee recommends that the Land Use Committee approve the Petition.

In Favor: Weprin, Gentile, Williams, Wills, Richards, Reynoso, Ignizio
Against: *None* **Abstain:** *None*

COMMITTEE ACTION

DATE: March 20, 2014

The Committee recommends that the Council approve the attached resolution.

In Favor: Greenfield, Gentile, Palma, Arroyo, Dickens, Garodnick, Mealy, Mendez, Rodriguez, Koo, Lander, Levin, Weprin, Williams, Wills, Richards, Barron, Kallos, Reynoso, Torres, Treyger, Ignizio
Against: *None* **Abstain:** *None*

In connection herewith, Council Members Greenfield and Weprin offered the following resolution:

Res. No. 155

Resolution approving the petition for a revocable consent for an unenclosed sidewalk café located at 98 Kenmare Street, Borough of Manhattan (20145310 TCM; L.U. No. 21).

By Council Members Greenfield and Weprin.

WHEREAS, the Department of Consumer Affairs filed with the Council on February 18, 2014 its approval dated February 18, 2014 of the petition of 98 Kenmare Restaurant Group LLC, d/b/a Maison O, for a revocable consent to establish, maintain and operate an unenclosed sidewalk café located at 98 Kenmare Street, Community District 2, Borough of Manhattan (the "Petition"), pursuant to Section 20-226 of the New York City Administrative Code (the "Administrative Code");

WHEREAS, the Petition is subject to review by the Council pursuant to Section 20-226(e) of the Administrative Code;

WHEREAS, upon due notice, the Council held a public hearing on the Petition on March 18, 2014; and

WHEREAS, the Council has considered the land use implications and other policy issues relating to the Petition;

RESOLVED:

Pursuant to Section 20-226 of the Administrative Code, the Council approves the Petition.

DAVID G. GREENFIELD, Chairperson; VINCENT J. GENTILE; ANNABEL PALMA, MARIA del CARMEN ARROYO, INEZ E. DICKENS, DANIEL R. GARODNICK, DARLENE MEALY, ROSIE MENDEZ, YDANIS A. RODRIGUEZ, PETER A. KOO, BRADFORD S. LANDER, STEPHEN T. LEVIN, MARK S. WEPRIN, JUMAANE D. WILLIAMS, RUBEN WILLS, DONOVAN J. RICHARDS, INEZ D. BARRON, BEN KALLOS, ANTONIO REYNOSO, RITCHIE J. TORRES, MARK TREYGER, VINCENT M. IGNIZIO; Committee on Land Use, March 20, 2014.

On motion of the Speaker (Council Member Mark-Viverito), and adopted, the foregoing matter was coupled as a General Order for the day (see ROLL CALL ON GENERAL ORDERS FOR THE DAY).

Report for L.U. No. 22

Report of the Committee on Land Use in favor of disapproving Application no. 20145354 TCQ, pursuant to §20-226 of the Administrative Code of the City of New York, concerning the petition of Nonna's of Whitestone LTD, d/b/a Nonna's Pizzeria & Trattoria, for a revocable consent to continue establish, maintain and operate an enclosed sidewalk café located at 22-30 154th Street, in the Borough of Queens, Community District 7, Council District 19. This application is subject to review and action by the Land Use Committee only if called-up by vote of the Council pursuant to Rule 11.20b of the Council and §20-226(e) of the New York City Administrative Code.

The Committee on Land Use, to which the annexed Land Use item (with coupled resolution) was referred on February 26, 2014 (Minutes, page 539), respectfully

REPORTS:

SUBJECT

QUEENS CB - 7 **20145354 TCQ**

Application pursuant to Section 20-225 of the Administrative Code of the City of New York, concerning the petition of Nonna's of Whitestone Ltd., d/b/a Nonna's Pizzeria and Trattoria, for a revocable consent to establish, maintain and operate an enclosed sidewalk café located at 22-30 154th Street.

INTENT

To allow an eating or drinking place located on a property which abuts the street to establish, maintain and operate an enclosed service area on the sidewalk of such street.

PUBLIC HEARING

DATE: March 18, 2014

Witnesses in Favor: None **Witnesses Against:** None

SUBCOMMITTEE RECOMMENDATION

DATE: March 18, 2014

The Subcommittee recommends that the Land Use Committee disapprove the Petition.

In Favor: Weprin, Gentile, Williams, Wills, Richards, Reynoso, Ignizio
Against: *None* **Abstain:** *None*

COMMITTEE ACTION

DATE: March 20, 2014

The Committee recommends that the Council approve the attached resolution.

In Favor: Greenfield, Gentile, Palma, Arroyo, Dickens, Garodnick, Mealy, Mendez, Rodriguez, Koo, Lander, Levin, Weprin, Williams, Wills, Richards, Barron, Kallos, Reynoso, Torres, Treyger, Ignizio
Against: *None* **Abstain:** *None*

In connection herewith, Council Members Greenfield and Weprin offered the following resolution:

Res. No. 156

Resolution disapproving the petition for a revocable consent for an enclosed sidewalk café located at 22-30 154th Street, Borough of Queens (20145354 TCQ; L.U. No. 22).

By Council Members Greenfield and Weprin.

WHEREAS, the Department of Consumer Affairs filed with the Council on February 10, 2014 its approval dated February 5, 2014 of the petition of Nonna's of Whitestone Ltd., d/b/a Nonna's Pizzeria and Trattoria, for a revocable consent to establish, maintain and operate an enclosed sidewalk café located at 22-30 154th Street, Community District 7, Borough of Queens (the "Petition"), pursuant to Section 20-225 of the New York City Administrative Code (the "Administrative Code");

WHEREAS, the Petition is subject to review by the Council pursuant to Section 20-225(g) of the Administrative Code;

WHEREAS, upon due notice, the Council held a public hearing on the Petition on March 18, 2014; and

WHEREAS, the Council has considered the land use implications and other policy issues relating to the Petition;

RESOLVED:

Pursuant to Section 20-225 of the Administrative Code, on the basis of the record before the Council concerning the Petition, the Council disapproves the Petition.

DAVID G. GREENFIELD, Chairperson; VINCENT J. GENTILE; ANNABEL PALMA, MARIA del CARMEN ARROYO, INEZ E. DICKENS, DANIEL R. GARODNICK, DARLENE MEALY, ROSIE MENDEZ, YDANIS A. RODRIGUEZ, PETER A. KOO, BRADFORD S. LANDER, STEPHEN T. LEVIN, MARK S. WEPRIN, JUMAANE D. WILLIAMS, RUBEN WILLS, DONOVAN J. RICHARDS, INEZ D. BARRON, BEN KALLOS, ANTONIO REYNOSO, RITCHIE J. TORRES, MARK TREYGER, VINCENT M. IGNIZIO; Committee on Land Use, March 20, 2014.

Coupled to be Disapproved.

Report for L.U. No. 34

Report of the Committee on Land Use in favor of approving Application No. 20145279 HKX (N 140216 HKX) pursuant to §3020 of the Charter of the City of New York, concerning the designation by the Landmarks Preservation Commission of the Bronx General Post Office Lobby, First Floor Interior, at 560 Grand Concourse, aka 554-582 Grand Concourse (Block 2443, Lot 400) (Designation List No. 470/LP-2552), Borough of the Bronx, Community District 4, Council District 17, as a historic landmark.

The Committee on Land Use, to which the annexed Land Use item (with coupled resolution) was referred on March 12, 2014 (Minutes, page 710), respectfully

REPORTS:

SUBJECT

BRONX CB - 4 **20145279 HKX (N 140216 HKX)**

Designation by the Landmarks Preservation Commission (List No. 470/LP-2552), pursuant to Section 3020 of the New York City Charter, of the landmark designation of the Bronx General Post Office first floor lobby interior, located at 560 Grand Concourse (Block 2443, Lot 400), as an historic landmark.

PUBLIC HEARING

DATE: March 18, 2014

Witnesses in Favor: Two **Witnesses Against:** None

SUBCOMMITTEE RECOMMENDATION

DATE: March 18, 2014

The Subcommittee recommends that the Land Use Committee affirm the designation.

In Favor: Koo, Levin, Palma, Arroyo, Mendez, Barron, Kallos
Against: *None* **Abstain:** *None*

COMMITTEE ACTION

DATE: March 20, 2014

The Committee recommends that the Council approve the attached resolution.

In Favor: Greenfield, Gentile, Palma, Arroyo, Dickens, Garodnick, Mealy, Mendez, Rodriguez, Koo, Lander, Levin, Weprin, Williams, Wills, Richards, Barron, Kallos, Reynoso, Torres, Treyger, Ignizio
Against: *None* **Abstain:** *None*

In connection herewith, Council Members Greenfield and Koo offered the following resolution:

Res. No. 157

Resolution affirming the designation by the Landmarks Preservation Commission of the Bronx General Post Office Lobby, First Floor Interior, located at 560 Grand Concourse, aka 554-582 Grand Concourse (Tax Map Block 2443, Lot 400) Borough of the Bronx, Designation List No. 470, LP-2552 (L.U. No. 34; 20145279 HKX; N 140216 HKX).

By Council Members Greenfield and Koo.

WHEREAS, the Landmarks Preservation Commission filed with the Council on December 23, 2013 a copy of its designation dated December 17, 2013 (the "Designation"), of the Bronx General Post Office Lobby, First Floor Interior, located at 560 Grand Concourse, aka 554-582 Grand Concourse, Community District 4, Borough of the Bronx as a landmark and Tax Map Block 2443, Lot 400, as its landmark site pursuant to Section 3020 of the New York City Charter;

WHEREAS, the Designation is subject to review by the Council pursuant to Section 3020 of the City Charter;

WHEREAS, the City Planning Commission submitted to the Council on February 21, 2014, its report on the Designation dated February 19, 2014 (the "Report");

WHEREAS, upon due notice, the Council held a public hearing on the Designation on March 18, 2014; and

WHEREAS, the Council has considered the land use implications and other policy issues relating to the Designation;

RESOLVED:

Pursuant to Section 3020 of the City Charter, and on the basis of the information and materials contained in the Designation and the Report, the Council affirms the Designation.

DAVID G. GREENFIELD, Chairperson; VINCENT J. GENTILE; ANNABEL PALMA, MARIA del CARMEN ARROYO, INEZ E. DICKENS, DANIEL R. GARODNICK, DARLENE MEALY, ROSIE MENDEZ, YDANIS A. RODRIGUEZ, PETER A. KOO, BRADFORD S. LANDER, STEPHEN T. LEVIN, MARK S. WEPRIN, JUMAANE D. WILLIAMS, RUBEN WILLS, DONOVAN J. RICHARDS, INEZ D. BARRON, BEN KALLOS, ANTONIO REYNOSO, RITCHIE J. TORRES, MARK TREYGER, VINCENT M. IGNIZIO; Committee on Land Use, March 20, 2014.

On motion of the Speaker (Council Member Mark-Viverito), and adopted, the foregoing matter was coupled as a General Order for the day (see ROLL CALL ON GENERAL ORDERS FOR THE DAY).

GENERAL ORDER CALENDAR

Resolution approving various persons Commissioners of Deeds

By the Presiding Officer –

Resolved, that the following named persons be and hereby are appointed Commissioners of Deeds for a term of two years:

Approved New Applicant's Report

Name	Address	District #
Kathy Cobena	51-20 48th Street Woodside, N.Y. 11377	26
Derrick Gary	220-06 109m Avenue Queens, N.Y. 11429	27
Craig Anderson	434 Lexington Avenue #2 Brooklyn, N.Y. 11221	36
Rachel Buhner	58 Pulaski Street 142 Brooklyn, N.Y. 11206	36
Kemeshia Horrell	1046 Park Place Brooklyn, N.Y. 11213	36
Heather Peskin	4323 Ninth Avenue #4H Brooklyn, N.Y. 11232	38
Daniel Foote	105-51 Flatlands 7th Street Brooklyn, N.Y. 11236	46
Cleopatra Livingston	5022 Avenue I Brooklyn, N.Y. 11234	46
Joseph A. Kovac	112 Weed Avenue Staten Island, N.Y. 10306	50

Approved New Applicants and Reapplicants

Name	Address	District #
Zhao Yun Lin	12 Monroe Street #HG11 New York, N.Y. 10002	1
Pamela A. Cassandra	11 Stuyvesant Oval #9G New York, N.Y. 10009	4
Trisha Powell	4865 Broadway #3Y New York, N.Y. 10034	7
Sandy Chuang	300 West 110th Street #2K New York, N.Y. 10026	8
India Burrows	277 West 127th Street #9A New York, N.Y. 10027	9
Gladys Echevarria	666 West 188th Street #5H New York, N.Y. 10040	10
Annette Kale	140 Carver Loop #8E Bronx, N.Y. 10475	12
Laura Castellanos-Arroyo	1038 Rhinelander Avenue Bronx, N.Y. 10461	13
Joseph J. Furgiuele	926 Morris Park Avenue Bronx, N.Y. 10462	13
Jamie P. Nolan	1650 Hutchinson River Parkway #5F Bronx, N.Y. 10461	13
LaKrinda Williams	40 Richman Plaza *1·16B* Bronx, N.Y. 10453	16
Carmen Bizardi	539 Fox Street Bronx, N.Y. 10455	17
La'Nette Hearns	225 East 149th Street #15E Bronx, N.Y. 10451	17
Kimberlee J. Kitson	56-13 205th Street Oakland Gardens, N.Y. 11364	23
Javier Acevedo	84-39 153rd Avenue #6L Howard Beach, N.Y. 11414	24
Nyema Dolma	71-09 35th Avenue Jackson Heights, N.Y. 11372	25
Tracey Garcia-Mitchell	96-04 57th Avenue #18G Queens, N.Y. 11368	25
Josianne Dieudonne	100-06 222nd Street Queens Village, N.Y. 11434	27
Mary C. White	119-40 196th Street St. Albans, N.Y. 11412	27
Patricia L. Emanuel	172-24 133rd Avenue 410D Queens, N.Y. 11434	28
Jasmine Collado	70-21 69th Place Glendale, N.Y. 11385	30
Bernadette Chase	2927 Beach Channel Drive Far Rockaway, N.Y. 11691	31
Donna L. Caldwell	319 Beach 98th Street 45H Rockaway, N.Y. 11694	32
Louis Grell	129 Carlton Avenue 42B Brooklyn, N.Y. 11205	35
Tonya Reese	2164 Pitkin Avenue Brooklyn, N.Y. 11207	37
Lillian Ingram	1607 Prospect Place #2G Brooklyn, N.Y. 11233	41
Theodore Salley, Jr.	638 MacDonough Street Brooklyn, N.Y. 11233	41
Gem Gardner	339 Berriman Street Brooklyn, N.Y. 11208	42
Margaret P. Edwards	431 Hegeman Avenue Brooklyn, N.Y. 11207	42
Belinda McDowell	10307 Flatlands Avenue #6C Brooklyn, N.Y. 11236	42
Cynthia Muniz	330 Stanley Avenue #1B Brooklyn, N.Y. 11207	42
Carmen Rankin	5985 Shore Parkway Brooklyn, N.Y. 11236	42
Barbara Gorman	7907 14th Avenue Brooklyn, N.Y. 11228	43
Victoria Kobylevskaya	8403 19th Avenue #2 Brooklyn, N.Y. 11214	43
Denise A. Rallakis	240 94th Street Brooklyn, N.Y. 11209	43
Djenane Guerrier	603 East 51st Street Brooklyn, N.Y. 11203	45
Stephanie Meyer	1373 Brooklyn Avenue Brooklyn, N.Y. 11203	45
Joseph Walker	640 East 80th Street Brooklyn, N.Y. 11236	46
Joseph Fontana	44 Bay 38th Street Brooklyn, N.Y. 11214	47
Alfonso Morrone	2527 Cropsey Avenue Brooklyn, N.Y. 11214	47
Susan Jacobson	1814 East 22nd Street Brooklyn, N.Y. 11229	48
Alexander Schiavo	112 Forest Street #1 Staten Island, N.Y. 10314	49
Anthony Iglesias	85 J Freeman Avenue Staten Island, N.Y. 10314	50
Phillip Jackier	37 Uxbridge Street Staten Island, N.Y. 10314	50
Joette Pompeo	173 Winham Avenue Staten Island, N.Y. 10306	50
Rose Marie Romano	7 Pamela Lane Staten Island, N.Y. 10304	51

On motion of the Speaker (Council Member Mark-Viverito), and adopted, the foregoing matter was coupled as a General Order for the day (see ROLL CALL ON GENERAL ORDERS FOR THE DAY).

ROLL CALL ON GENERAL ORDERS FOR THE DAY
(Items Coupled on General Order Calendar)

(1)	**Int 173-A -**	Prohibition of discrimination against interns.
(2)	**Res 135 -**	Resolution approving the new designation and changes in the designation of certain organizations to receive funding in the Expense Budget **(Transparency Resolution)**.
(3)	**L.U. 18 & Res 153 -**	**App. 20145268 TCM**, White Horse Tavern, sidewalk café located at 567 Hudson Street, Manhattan, Council District 3. Coupled on GO
(4)	**L.U. 20 & Res 154 -**	**App. N 140099 ZRK** ferry and water taxi docking facilities in the Borough of Brooklyn, Community District 1, Council District 33.
(5)	**L.U. 21 & Res 155 -**	**App. 20145310 TCM**, Maison O, sidewalk café located at 98 Kenmare Street, Manhattan, Council District 1.
(6)	**L.U. 22 & Res 156 -**	**App. 20145354 TCQ**, Nonna's Pizzeria & Trattoria, sidewalk café, 22-30 154th Street, Queens, Council District 19 **(Coupled to be Disapproved)**.
(7)	**L.U. 34 & Res 157 -**	**App. 20145279 HKX (N 140216 HKX)** Bronx General Post Office Lobby, First Floor Interior, at 560 Grand Concourse, Borough of the Bronx, Community District 4, Council District 17, as a historic landmark.
(8)	**L.U. 38 & Res 152 -**	Section 202 Supportive Housing Program For The Elderly, Council District No. 16.

(9) Resolution approving various persons Commissioners of Deeds.

The Public Advocate (Ms. James) put the question whether the Council would agree with and adopt such reports which were decided in the **affirmative** by the following vote:

Affirmative – Arroyo, Barron, Cabrera, Chin, Cohen, Constantinides, Cornegy, Crowley, Cumbo, Deutsch, Dickens, Dromm, Espinal, Eugene, Ferreras, Garodnick, Gentile, Gibson, Greenfield, Johnson, Kallos, King, Koo, Koslowitz, Lancman, Lander, Levin, Levine, Maisel, Matteo, Mealy, Menchaca, Mendez, Miller, Palma, Reynoso, Richards, Rodriguez, Rose, Rosenthal, Treyger, Ulrich, Vacca, Vallone, Weprin, Williams, Wills, Ignizio, Van Bramer, and the Speaker (Council Member Mark-Viverito) – **50**.

The General Order vote recorded for this Stated Meeting was 50-0-0 as shown above.

The following Introduction was sent to the Mayor for his consideration and approval: Int No. 173-A.

For **Introduction and Reading of Bills**, see the material following the **Resolutions** section below:

RESOLUTIONS
Presented for voice-vote

The following are the respective Committee Reports for each of the Resolutions referred to the Council for a voice-vote pursuant to Rule 8.50 of the Council:

Report for voice-vote Res. No. 15

Report of the Committee on Transportation in favor of approving a Resolution calling upon the Governor and the New York State Department of Transportation to implement the recommendations of the Sheridan-Hunts Point Land Use and Transportation Study.

The Committee on Transportation, to which the annexed resolution was referred on February 4, 2014 (Minutes, page 260), respectfully

REPORTS:

INTRODUCTION

On March 25, 2014, the Committee on Transportation, chaired by Council Member Ydanis Rodriguez, held a hearing on Res. No. 15, calling upon the Governor and the New York State Department of Transportation to implement the recommendations of the Sheridan-Hunts Point Land Use and Transportation Study. This was the first hearing on this resolution. The Committee heard testimony from a variety of interested stakeholders and community leaders.

RES. NO. 15

Resolution No. 15 would state that in June 2013, multiple City agencies, led by the New York City Department of City Planning and the New York City Department of Transportation, completed the Sheridan-Hunts Point Land Use and Transportation Study (the Study) and made a series of final recommendations regarding what should be done with the 1.25 mile long Sheridan Expressway (the Sheridan) corridor in the Bronx, which connects the Bruckner Expressway and the Cross Bronx Expressway, as well as adjacent areas.

The Resolution would state that the Sheridan was part of an abandoned highway plan to enable development throughout the Bronx, the consequence of which is a lack of efficient connectivity that impedes the economic growth of the area.

The Resolution would assert that the Sheridan has created well-documented negative impacts on the surrounding communities, especially related to poor air-quality caused by vehicle emissions, deadly intersections, and physical isolation from services and amenities.

The Resolution would state that the final recommendations of the Study include the construction of direct access ramps from the elevated Bruckner Expressway to the Hunts Point peninsula which hosts the Hunts Point Food Distribution Center, the largest wholesale food distribution market in North America, and that these ramps would aid in the efficient transportation of goods while also removing substantial truck traffic from local streets.

The Resolution would further state that the recommendations also include the installation of crosswalks, stoplights, and other facilities to help make the corridor more pedestrian friendly and to improve access to the Bronx River waterfront and associated parks.

The Resolution would also state that the envisioned reconstruction would include the transformation of a portion of the Sheridan into an at-grade local boulevard, opening up developable land currently in the Sheridan footprint and would close at least two Sheridan ramps that are currently causing major overcrowding and impacting pedestrian safety.

The Resolution would assert that implementing the recommendations of the Study would yield significant health and economic benefits while improving neighborhood cohesion and transportation in a currently overburdened area of the Bronx.

Finally, Resolution No. 15 would call upon the Governor and the New York State Department of Transportation to implement the recommendations of the Sheridan-Hunts Point Land Use and Transportation Study.

UPDATE

On March 25, 2014, the Committee on Transportation passed Res. No. 15 by a vote of eleven in the affirmative and zero in the negative, with no abstentions.

Accordingly, this Committee recommends its adoption.

(The following is the text of Res. No. 15:)

Res. No. 15

Resolution calling upon the Governor and the New York State Department of Transportation to implement the recommendations of the Sheridan-Hunts Point Land Use and Transportation Study.

By Council Members Palma, Arroyo, Koo, Levin, Reynoso, Gibson, King, Vacca, Torres, Cohen, Rosenthal, Barron, Cornegy, Lander and Williams.

Whereas, In June 2013, multiple City agencies, led by the New York City Department of City Planning and the New York City Department of Transportation, completed its Sheridan-Hunts Point Land Use and Transportation Study (the Study) and made a series of final recommendations regarding what should be done with the 1.25 mile long Sheridan Expressway (the Sheridan) corridor in the Bronx, which connects the Bruckner Expressway and the Cross Bronx Expressway, as well as adjacent areas; and

Whereas, The Sheridan was part of an abandoned highway plan to enable development throughout the Bronx, the consequence of which is a lack of efficient connectivity that impedes the economic growth of the area; and

Whereas, The Sheridan has created well-documented negative impacts on the surrounding communities, especially related to poor air-quality caused by vehicle emissions, deadly intersections and physical isolation from services and amenities; and

Whereas, The final recommendations of the Study include the construction of direct access ramps from the elevated Bruckner Expressway to the Hunts Point peninsula which hosts the Hunts Point Food Distribution Center, the largest wholesale food distribution market in North America, and these ramps would aid in the efficient transportation of goods while also removing substantial truck traffic from local streets; and

Whereas, The recommendations also include the installation of crosswalks, stoplights and other facilities to help make the corridor more pedestrian friendly and to improve access to the Bronx River waterfront and associated parks; and

Whereas, The envisioned reconstruction would include the transformation of a portion of the Sheridan into an at-grade local boulevard, opening up developable land currently in the Sheridan footprint and would close at least two Sheridan ramps that are currently causing major overcrowding and impacting pedestrian safety; and

Whereas, Implementing the recommendations of the Study would yield significant health and economic benefits while improving neighborhood cohesion and transportation in a currently overburdened area of the Bronx; now, therefore, be it

Resolved, That the Council of the City of New York calls upon the Governor and the New York State Department of Transportation to implement the recommendations of the Sheridan-Hunts Point Land Use and Transportation Study.

YDANIS A. RODRIGUEZ, Chairperson; DANIEL R. GARODNICK, JAMES VACCA, MARGARET S. CHIN, DEBORAH L. ROSE, JAMES G. VAN BRAMER, MARK S. WEPRIN, DAVID G. GREENFIELD, CARLOS MENCHACA, I. DANEEK MILLER, ANTONIO REYNOSO; Committee on Transportation, March 25, 2014. *Other Council Members Attending: Arroyo and Dromm.*

Pursuant to Rule 8.50 of the Council, The Public Advocate (Ms. James) called for a voice vote. Hearing those in favor, the Public Advocate (Ms. James) declared the Resolution to be adopted.

Adopted unanimously by the Council by voice-vote.

Report for voice-vote Res. No. 123-A

Report of the Committee on General Welfare in favor of approving, as amended, a Resolution calling on the New York State Assembly and Senate to pass, and the Governor to sign, a State budget which does not bar the City of New York from using State reimbursements for rental subsidy programs for the homeless, and calling on the City of New York and State of New York to work together to create a rental subsidy program for the homeless.

The Committee on General Welfare, to which the annexed amended resolution was referred on March 12, 2014 (Minutes, page 706), respectfully

REPORTS:

I. Introduction

On March 26, 2014, the Committee on General Welfare, chaired by Council Member Stephen Levin, will conduct a hearing on Proposed Res. No. 123-A, a Resolution calling on the New York State Assembly and Senate to pass, and the Governor to sign, a State budget which does not bar the City of New York from using State reimbursements for rental subsidy programs for the homeless, and calling on the City of New York and State of New York to work together to create a rental subsidy program for the homeless.

II. Background

The average number of families in the homeless shelter system continues to consistently increase. According to the Department of Homeless Services (DHS) Daily Report, as of March 21, 2014, there were 52,150 individuals in shelter, including 37,948 individuals who are members of families with children.[1] Since 2008, there has been over a 70 percent increase in the number of families with children in shelter.[2]

In 2007, the City created the Advantage rental subsidy program, which was aimed at moving people out of the shelter system. The program provided subsidies for up to two years and required participants to work or take part in job training programs. Despite concerns at the time with the Advantage program's time-limited structure, it was the only housing assistance in place to move families from shelter to permanent housing.[3] However, in 2011, the New York State Legislature and Governor placed restrictions on how the City could allocate State funding for rental subsidy programs in an effort to cut costs, and in light of these restrictions, the City ended the Advantage program. According to the Coalition for the Homeless, half of all families whose Advantage subsidies were cut off or expired -- more than 8,500 families -- had returned to the shelter system as of August 2013, and more than 200 former Advantage families enter the shelter system each month.[4] Currently, there is no rental assistance available aimed at moving families out of the shelter system and into permanent housing.

At a February 27, 2014, General Welfare Committee hearing, DHS Commissioner Gilbert Taylor testified that although the agency was not yet ready to put forward a plan for a new rental subsidy program, the agency was in discussion with the Mayor's Office, and seeking input from advocates, regarding the creation of a rental subsidy program.[5] Commissioner Taylor further testified that in order for the City to access State funds for a rental subsidy aimed at families in the homeless shelter system, prohibitive language in the State budget bill would need to be removed.[6] Currently, the State budget bill includes the following language, ". . . in social services districts with a population over five million no shelter supplement other than those to prevent eviction shall be reimbursed."[7] The State budget is scheduled to pass on April 1, 2014. If the prohibitive language is not removed from the budget prior to its passage, the City will be unable to utilize any State reimbursement funding for a rental subsidy aimed at moving families out of the shelter system.

III. Analysis

Proposed Resolution No. 123-A describes the current state of homelessness in New York City, specifically that: over 50,000 individuals are currently in the shelter system, over half of whom are members of families with children; there has been an 11 and 13 percent increase in length of stay for families with children and adult families respectively; and there additionally has been an overall increase in the number of families returning to shelter within one year of leaving. The Proposed Resolution also describes the Advantage program, a former rental assistance program which began in 2007 in order to move homeless families out of the shelter system, but ended in 2011 due to State restrictions on how the City could use State funding. The Proposed Resolution cites the findings of the Coalition for the Homeless that, from 2011 to 2013, after the end of the Advantage program, the shelter population rose by over 10,000 individuals. The Proposed Resolution further cites a spokesperson for Mayor de Blasio, who was quoted in the *Wall Street Journal* stating that the reintroduction of a rental subsidy program is a priority for the Mayor.

Proposed Resolution No. 123-A explains that the State budget bill, which allocates State aid to localities, currently bars cities with populations over five million, like New York City, from paying for rental assistance subsidies with State funding unless the subsidies are explicitly aimed at preventing eviction. The Proposed Resolution further explains that this language would bar the City from creating a rental subsidy program similar to the former Advantage program, which was aimed at moving families out of the shelter system, and not at preventing evictions. The Proposed Resolution states that denying the City flexibility in how it allocates State funding for rental assistance to homeless families prevents families from leaving the shelter system and contributes to New York City's homelessness crisis. The Proposed Resolution additionally states that the City and State should work together to create a rental subsidy program to combat the current homelessness crisis. In order to do so, the Proposed Resolution asserts that the State budget should include funding for a rental subsidy program that would use Federal, State, and City funding to help families prepare, transition, and connect to resources for long-term independence.

Therefore, Proposed Resolution No. 123-A calls on the New York State Assembly and the Senate to pass, and the Governor to sign, a State budget which would not bar the City from using State reimbursements for rental subsidy programs for the homeless, and further calls on the City and State to work together to create a renal subsidy program for the homeless.

[1] Department of Homeless Services, Daily Report, (Jan. 24, 2014), *available at* http://www.nyc.gov/html/dhs/downloads/pdf/dailyreport.pdf.
[2] *Id.*
[3] In 2005, the Bloomberg Administration ended the priority for homeless individuals and families for Federal housing programs, such as public housing and Section 8 rental vouchers.
[4] Coalition for the Homeless, State of the Homeless 2014, (March 12, 2014), p. 18.
[5] Testimony of Gilbert Taylor, Commissioner, Department of Homeless Services, before the Committee on General Welfare, "Conditions and Operations in DHS Family Shelters," (Feb. 27, 2014).
[6] *Id.*
[7] State of New York, Aid to Localities Budget, S.6353/A.8553, p. 290.

Accordingly, this Committee recommends its adoption, as amended.

(The following is the text of Res. No. 123-A:)

Res. No. 123-A

Resolution calling on the New York State Assembly and Senate to pass, and the Governor to sign, a State budget which does not bar the City of New York from using State reimbursements for rental subsidy programs for the homeless, and calling on the City of New York and State of New York to work together to create a rental subsidy program for the homeless.

By Council Members Wills, Levin, Gibson, Palma, Deutsch, Cohen, Menchaca, Johnson, Lander, Levine, Reynoso, Chin, Mendez, Van Bramer, Rosenthal, Barron, Crowley, Cumbo, Dickens, Eugene, Gentile and Greenfield.

Whereas, The total population of New York City's Department of Homeless Services (DHS) shelter system has risen over the past ten years from 38,468 in

February 2004 according to the Coalition for the Homeless, to 52,261, according to the latest data available from DHS; and

Whereas, Over half of the current DHS shelter population are members of families with children; and

Whereas, The average length of stay in a shelter increased by 11 percent for families with children, and by 13 percent for adult families in 2013; and

Whereas, The percentage of individuals who return to a shelter within one year of leaving also increased for individuals, and families with and without children in 2013; and

Whereas, Beginning in 2007, many homeless families were able to leave the shelter system with the help of Advantage, New York City's rental subsidy program, which was partially funded by allocations from the New York State budget; and

Whereas, However, in 2011, the New York State Legislature and Governor placed restrictions on how the City could allocate State funding for rental subsidy programs in an effort to cut costs; and

Whereas, In light of these restrictions, the City ended the Advantage program, removing one of the most effective options families had for leaving the shelter system; and

Whereas, With the end of Advantage, the shelter population increased dramatically, rising by over 10,000 individuals between January 2011 and January 2013, according to the Coalition for the Homeless; and

Whereas, A spokesperson for Mayor Bill de Blasio recently called the reintroduction of some form of rental subsidy "a priority for the mayor," according to the *Wall Street Journal*; and

Whereas, With the State Assembly and Senate set to pass a new budget in the coming weeks, there is an opportunity to reinstate funding for a rental subsidy program in New York City; and

Whereas, The State budget bill, which allocates State aid to localities, currently bars cities with populations over five million, like New York City, from paying for rental assistance subsidies with State funding unless said subsidies are explicitly aimed at preventing eviction; and

Whereas, As Advantage was aimed not at eviction prevention, but at assisting families in shelter to leave the shelter system, State funding cannot currently be used to support Advantage or a similar program; and

Whereas, Denying the City flexibility in how it allocates State funding for rental assistance to homeless families prevents families from leaving the shelter system and contributes to New York City's homelessness crisis; and

Whereas, The City and State should work together to create a rental subsidy program that is robust enough in both scale and scope to effectively combat the current homelessness crisis; and

Whereas, The State budget should include funding for a rent subsidy that shall use Federal, State, and City funding to establish a program designed to help families prepare, transition, and connect to resources for long-term independence; now, therefore be it

Resolved, That the Council of the City of New York calls on the New York State Assembly and Senate to pass, and the Governor to sign, a State budget which does not bar the City of New York from using State reimbursements for rental subsidy programs for the homeless, and calling on the City of New York and State of New York to work together to create a rental subsidy program for the homeless.

STEPHEN T. LEVIN, Chairperson; ANNABEL PALMA, FERNANDO CABRERA, RUBEN WILLS, DONOVAN J. RICHARDS, VANESSA L. GIBSON, COREY D. JOHNSON, CARLOS MENCHACA; Committee on General Welfare, March 26, 2014.

Pursuant to Rule 8.50 of the Council, The Public Advocate (Ms. James) called for a voice vote. Hearing those in favor, the Public Advocate (Ms. James) declared the Resolution to be adopted.

Adopted unanimously by the Council by voice-vote.

INTRODUCTION AND READING OF BILLS

Int. No. 184

By Council Members Chin, Johnson, Koo, Levine, Mendez and Rose.

A Local Law to amend the administrative code of the city of New York, in relation to the allowable maximum heat loss through building walls.

Be it enacted by the Council as follows:

Section 1. Statement of findings and purpose. The thermal performance of the exterior walls of a building has a significant impact on the energy use of the building over a long period of time. This is because the building envelope is replaced infrequently, unlike other energy systems, such as lighting or HVAC equipment, that have much shorter useful lives. Presently, the national model energy codes do not explicitly require the designer to account for certain common thermal bridges in buildings, including floor slabs, shelf angles and mechanical wall penetrations.

The proposed legislation mandates heightened thermal performance of exterior walls by requiring (1) inclusion of thermal bridging of exterior walls at floor slabs and mechanical equipment penetrations as part of the calculation of the U-factor of the opaque wall, and (2) minimization of air leakage at mechanical penetrations.

§ 2. Section 28-1001.2 of the administrative code of the city of New York is amended to read as follows:

Chapter 2 -- Definitions

Section 202

Add a new definition of "Mechanical wall penetration" after the definition of "Manual," to read as follows:

MECHANICAL WALL PENETRATION. An opening in an exterior wall filled by a piece of heating, ventilating and/or air conditioning (HVAC) equipment.

Add a new definition of "Window wall" after the definition of "Ventilation air," to read as follows:

WINDOW WALL. Panelized cladding or fenestration products used to create an external nonload-bearing wall that is designed to separate the exterior and interior environments and that rests on the floor slab instead of hanging from it.

Chapter 5 – Commercial Energy Efficiency

Table 502.1.2 *Add after "Metal framed" the following symbol:* [b]

Add after "Walls, Above Grade" the following symbol: [c]

Add after the table 502.1.2 footnotes to read as follows:

[b] *The opaque elements of curtain walls and window walls, including spandrel panels, are included in this category. Horizontal framing members between opaque elements and vision glazing must be included in the fenestration calculation (See Section 502.3).*

[c] *Slab edges and shelf angles must be included in all above grade wall U-factor calculations. Exposed slab edges are to be considered mass walls with a horizontal dimension equal to the horizontal dimension of the thicker of the adjacent exterior walls.*

Table 502.2(1) *Add after "Metal framed" the following symbol:* [f]

Add after "Walls, Above Grade" the following symbol: [g]

Add after the table 502.2(1) footnotes to read as follows:

[f] *The opaque elements of curtain walls and window walls, including spandrel panels, are included in this category. Framing members for vision glazing and framing members between opaque elements and vision glazing are not included as part of the opaque assembly.*

[g] *In this table slab edges and shelf angles are considered to be part of the opaque assembly. Where continuous insulation is required, the c.i. must cover all exposed surfaces of the slab and must not be interrupted by a shelf angle, even if the slab edge is the only opaque wall element. Exposed slab edges are to be considered mass walls with a horizontal dimension equal to the horizontal dimension of the thicker of the adjacent exterior walls.*

Add a new Section 502.2.3.1 to read as follows:

502.2.3.1 Mechanical wall penetrations in above grade walls. *The U-factor and/or R-value of mechanical wall penetrations and other wall penetrations, including intake or exhaust louvers, HVAC equipment, and the through-the-wall sleeves built into the wall into which the equipment is inserted, must be included when calculating the U-factor or R-value of the total wall assembly of an above grade wall in determining compliance with either Table 502.2(1) or Table 502.1.2.*

502.2.3.1.1 Determination of U-factors and R-values for mechanical wall penetrations in above grade walls. *The U-factor of a mechanical wall penetration, including the HVAC equipment, louvers, and the through-the-wall sleeve built into the wall into which the equipment is inserted, shall be assumed to be 0.5 Btu/hr-ft^2-^{o}F (or an R-value of 2.0 hr-ft^2-^{o}F/Btu), or as certified by the manufacturer in accordance with standards established by rules of the department.*

502.4.3 *Add a new item 5 to read as follows:*

5. Through-the-wall penetrations for mechanical equipment and intake or exhaust louvers shall be sealed between the sleeve and the adjacent wall assembly to maintain the integrity of the continuous air barrier.

Add a new Section 502.4.8 to read as follows:

502.4.8 HVAC assemblies in mechanical wall penetrations. *The air leakage of HVAC assemblies, comprising both the HVAC unit itself and the wall sleeve into which it is inserted, that are part of the building thermal envelope, shall not exceed 0.2 cfm/sq. ft. of penetration area at a pressure of at least 1.57 pounds per square foot (psf) (1.0 L/s/m^2 of penetration area). Installations are subject to inspection in accordance with the rules of the department.*

Appendix A – Modified Energy Standard

Chapter 3 – Definitions, Abbreviations, and Acronyms

3.2 *Add a new definition "curtain wall" after "cooling design wet-bulb temperature" to read as follows:*

curtain wall: *fenestration products used to create an external nonload-bearing wall that is designed to separate the exterior and interior environments.*

Add a new definition "mechanical wall penetration" after "mechanical cooling" to read as follows:

mechanical wall penetration: *an opening in an exterior wall filled by a piece of heating, ventilating and/or air conditioning (HVAC) equipment.*

Add a new definition "window wall" after "water heater" to read as follows:

window wall: *panelized cladding or fenestration products used to create an external nonload-bearing wall that is designed to separate the exterior and interior environments and that rests on the floor slab instead of hanging from it.*

Chapter 5 – Building Envelope

5.4.3.1 *Reletter item g as item h and add a new item g to read as follows:*

g. mechanical wall penetrations

Add a new Section 5.4.3.5 to read as follows:

5.4.3.5 HVAC Assemblies in Mechanical Wall Penetrations. *The air leakage of HVAC assemblies, comprising both the HVAC unit itself and the wall sleeve into which it is inserted, that are part of the building envelope, shall not exceed 0.2 cfm/sq. ft. of penetration area at a pressure of at least 1.57 pounds per square foot (psf) (1.0 L/s/m^2 of penetration area).*

Add a new Section 5.5.3.7 to read as follows:

5.5.3.7 Mechanical Wall Penetrations. *The U-factor of any mechanical wall penetration, including HVAC equipment and the through-the-wall sleeve built into the wall into which the equipment is inserted, must be included when calculating the U-factor of the total wall assembly of an above-grade wall in determining compliance with Table 5.5-4. Where thermal performance data are not available, the U-factor of the penetration, including the HVAC unit and the through-the-wall sleeve, shall be assumed to be 0.5 Btu/hr-ft^2-^{o}F (or an R-value of 2.0 hr-ft^2-^{o}F/Btu).*

Table 5.5-4 *Add after "Walls, Above-Grade" the following symbol: [e]*

Add after "Steel-Framed" the following symbols: [f] and [g]

Add after the table 5.5-4 footnotes to read as follows:

[e] Slab edges must be included in all above-grade wall U-factor calculations. Exposed slab edges are to be considered mass walls with a horizontal dimension equal to the horizontal dimension of the thicker of the adjacent exterior walls.

[f] Curtain wall and window wall opaque elements, including spandrel panels, are included in this category.

[g] In this table slab edges are considered to be part of the opaque assembly. Where continuous insulation is required, the c.i. must cover all exposed surfaces of the slab even if the slab edge is the only opaque wall element.

§ 3. This local law shall take effect on January 1, 2015 except that the commissioner of buildings shall take such measures as are necessary for its implementation, including the promulgation of rules, prior to such effective date.

Referred to the Committee on Housing and Buildings.

Int. No. 185

By Council Members Chin, Johnson, Koo, Mendez and Rose.

A Local Law to amend the administrative code of the city of New York, in relation to the permitting and monitoring of portable generators.

Be it enacted by the Council as follows:

Section 1. Section 24-104 of the administrative code of the city of New York is amended by adding a new subdivision 54 to read as follows:

(54) Portable generator means any internal combustion engine whose uses may include, but are not limited to, the generation of electric power, designed to be and capable of being carried or moved from one location to another.

§ 2. Subdivision a of section 24-121 of the administrative code of the city of New York is amended by adding a new paragraph 19 to read as follows:

(19) Portable generators. An application for a permit for the installation of any generator shall include documentation that the generator has passed a smoke test performed in accordance with the procedures set forth in "Method 9 - Visual determination of the opacity of emissions from stationary sources," Appendix A-4 to part sixty of title forty of the code of federal regulations, or documentation in the form of certification by a professional engineer or registered architect that a stack test has been performed in accordance with the rules of the department.

§ 3. Subchapter 6 of chapter 1 of title 24 of the administrative code of the city of New York is amended by adding a new section 24-141.1 to read as follows:

§ 24-141.1 Portable generators used to power building systems; monitoring. Portable generators used by building owners or operators to power building systems for more than forty-eight hours continuously, or for more than ninety-six hours in any seven day period, shall be continuously monitored by the owner or operator for the air quality where such portable generator is located within one hundred fifty feet of any residential building while it is in operation. Such air quality monitoring shall continue for the duration that such generator is used to power building systems or its intermittent use to power building systems is anticipated, and the owner or operator shall report the results to the department weekly. The commissioner shall promulgate rules to carry out the provisions of this section.

§ 4. This local law shall take effect one hundred twenty days after its enactment into law provided, however, that prior to such effective date the commissioner environmental protection shall promulgate rules or take any other action necessary for implementation of this local law.

Referred to the Committee on Environmental Protection.

Int. No. 186

By Council Members Constantinides, Cornegy, Koo, Rose, Koslowitz and Ulrich.

A Local Law to amend the administrative code of the city of New York, in relation to the noise standard for commercial establishments.

Be it enacted by the Council as follows:

Section 1. Legislative findings and intent. The Council finds that the noise code should provide the basis for the issuance of violations to entertainment establishments. However, increasingly the department has not relied upon the statutorily mandated noise levels as a basis for issuance of tickets. Instead the department has issued tickets based on the "unreasonable noise" provision of the administrative code, as determined by an inspector. While it is important to address excessive noise from entertainment establishments, entertainment establishments be given more precise notice of the standards to which they will be held.

Therefore, the Council finds that it is in the best interests of the City to prohibit use of the "unreasonable noise" standard as a basis for the issuance of summonses to entertainment establishments, including bars and restaurants.

§ 2. Subdivision b of section 24-218 of the administrative code of the city of New York is amended to read as follows:

(b) [Unreasonable] *For music originating from an interior space in connection with the operation of any commercial establishment or enterprise, unreasonable noise shall be defined as a sound that exceeds the prohibited noise levels set forth in this subdivision; and for all other sources of noise, unreasonable* noise shall include but shall not be limited to sound, attributable to any device, that exceeds the [following] prohibited noise levels *set forth in this subdivision*:

(1) Sound, other than impulsive sound, attributable to the source, measured at a level of 7 dB(A) or more above the ambient sound level at or after 10:00 p.m. and before 7:00 a.m., as measured at any point within a receiving property or as measured at a distance of 15 feet or more from the source on a public right-of-way.

(2) Sound, other than impulsive sound, attributable to the source, measured at a level of 10 dB(A) or more above the ambient sound level at or after 7:00 a.m. and before 10:00 p.m., as measured at any point within a receiving property or as measured at a distance of 15 feet or more from the source on a public right-of-way.

(3) Impulsive sound, attributable to the source, measured at a level of 15 dB(A) or more above the ambient sound level, as measured at any point within a receiving property or as measured at a distance of 15 feet or more from the source on a public right-of-way. Impulsive sound levels shall be measured in the A-weighting network with the sound level meter set to fast response. The ambient sound level shall be taken in the A-weighting network with the sound level meter set to slow response.

§ 3. Section 24-244 of the administrative code of the city of New York is amended by adding a new subdivision c to read as follows:

(c) This section shall not apply to music originating from an interior space in connection with the operation of any commercial establishment or enterprise.

§ 4. This local law shall take effect immediately.

Referred to the Committee on Environmental Protection.

Int. No. 187

By Council Members Cumbo, Barron, Cohen, Constantinides, Cornegy, Deutsch, Dickens, Eugene, Espinal, Ferreras, Gibson, Greenfield, Johnson, King, Lancman, Lander, Levine, Maisel, Mendez, Miller, Reynoso, Rose, Vallone, Weprin, William, Wills, Van Bramer and Rosenthal.

A Local Law to amend the administrative code of the city of New York, in relation to requiring the administration for children's services to provide information regarding high school graduation rates of youth in foster care.

Be it enacted by the Council as follows:

Section 1. Chapter 9 of title 21 of the administrative code of the city of New York is amended by adding a new section 21-907 to read as follows:

§ 21-907 Graduation rates of foster care youth. Beginning no later than October 1, 2014, and no later than every October 1 thereafter, the commissioner shall submit an annual report to the city council regarding the number of youth in foster care who graduated from high school in the previous year from September 1 through August 31. Each such report shall include but not be limited to (i) the total number of youth in foster care disaggregated by age, utilizing the following ranges: under 16 years old; 16-18 years old; and over 18 years old; (ii) the number of youth in foster care enrolled in high school disaggregated by age, utilizing the following ranges: under 16 years old; 16-18 years old; and over 18 years old; and (iii) the number of youth in foster care who graduated from high school disaggregated by age, utilizing the following ranges: under 16 years old; 16-18 years old; and over 18 years old.

§2. This local law shall take effect immediately.

Referred to the Committee on General Welfare.

Int. No. 188

By Council Members Dromm, Ferreras, King, Koo, Mendez, Miller, Rose and Koslowitz.

A Local Law to amend the administrative code of the city of New York, in relation to requiring the department of sanitation to collect and report data related to the unlawful posting of printed material.

Be it enacted by the Council as follows:

Section 1. Section 10-119 of the administrative code of the city of New York is amended by adding a new subdivision e to read as follows:

e. No later than October first, two thousand fourteen, and not less frequently than annually thereafter, the department of sanitation shall collect and report on its website the following statistical data concerning notices of violation of this section issued in each community district: (i) the number of issued notices of violation; (ii) the types of printed material posted (e.g., sticker, poster, etc.) in violation of this section; and (iii) the types of property on which such printed materials were posted (e.g., tree, lamppost, etc.) in violation of this section.

§2. This local law shall take effect immediately upon enactment.

Referred to the Committee on Sanitation and Solid Waste Management.

Int. No. 189

By Council Members Dromm, Barron, Chin, Eugene, Ferreras, Gentile, Koo, Mendez, Rose, Vallone, Wills, Koslowitz and Rosenthal.

A Local Law to amend the New York city charter, in relation to providing assistance to seniors with bed bugs in their homes.

Be it enacted by the Council as follows:

Section 1. Findings and Intent. The Department for the Aging promotes, administers and coordinates the development and provision of services for older New Yorkers to help them maintain their independence and participation in their communities. The New York City Bed Bug Advisory Board found that beg bugs have become a serious issue for many New Yorkers, especially those least equipped to deal with them, and that bed bugs are a pest of public health importance due to the physical, emotional and psychological impact that they can have on those affected.

The presence of bed bugs in New York City has increased dramatically in recent years and this increase seriously impacts senior citizens who often face difficulty carrying out the actions necessary to completely eradicate a bed bug infestation. Complete eradication of bed bugs is rarely achieved by chemical extermination alone and commonly requires disposing of infested items, moving items, washing clothes, sorting through papers and books, putting belongings in plastic bags, and cleaning hard to reach cracks in interior walls and ceilings, as well as electrical outlets. As a result of the high numbers of infestations and the intensive and repeated efforts required to eradicate an infestation, seniors are more likely to experience the negative physical, emotional, and psychological impacts of a bed bug infestation.

The health effects of bed bugs can be significant, despite the fact that bed bugs have not been shown to spread disease. The most significant health effects caused by the presence of bed bugs in the home include the onset of stress, anxiety, depression, and fatigue. These health effects are then amplified by the time and expense it takes to exterminate bed bugs successfully. Additionally, when bed bugs are present in the homes of those requiring home health care or other services, service providers often will not return until the bed bugs are gone, thus denying some in need of medical care and other essential services.

The New York City Bed Bug Advisory Board found that if strong action is not taken quickly by the City, the impact of bed bugs on residents, business owners, and visitors will continue to increase, thereby increasing economic hardship and decreasing quality of life. Accordingly, the Council finds that it is necessary to provide senior citizens with assistance in combating bed bugs and that it is imperative that adequate and efficient bed bug extermination procedures are consistently and continuously implemented to meet the needs of the City's senior citizen population.

§ 2. Section 2402 of the New York city charter is amended by amending subdivisions f and g and by adding a new subdivision h to read as follows:

f. to promulgate rules and regulations for the operation of facilities, services and programs under its jurisdiction; [and]

g. to maintain, operate and control such programs and facilities as may be necessary or required for the proper administration of the department[.]*; and*

h. to maintain, operate and control a program to provide effective assistance and support in the city for senior citizens with bed bug infestations in their dwelling to successfully eradicate such infestation, provided, however, that such assistance shall include the moving of furniture and heavy equipment, if necessary.

§ 3. This local law shall take effect ninety days after its enactment into law.

Referred to the Committee on Aging.

Int. No. 190

By Council Members Dromm, Constantinides, Dickens, Gentile, Koo, Mendez, Rose and Wills.

A Local Law to amend the administrative code of the city of New York, in relation to reducing the minimum distance at which a vehicle can park adjacent to a fire hydrant.

Be it enacted by the Council as follows:

Section 1. Subchapter 2 of chapter 1 of title 19 of the administrative code of the city of New York is amended by adding a new section 19-165.1 to read as follows:

§19-165.1 Stopping, standing or parking near fire hydrants. No person shall stop, stand or park a vehicle within ten feet of a fire hydrant, unless otherwise indicated by signs, or parking meters, except that during the period from sunrise to sunset if standing is not otherwise prohibited, the operator of a passenger car may stand the vehicle alongside a fire hydrant provided that the operator remains in the operator's seat ready for immediate operation of the vehicle at all times and starts the motor of the car on hearing the approach of fire apparatus, and provided further, that the operator shall immediately remove the car from alongside the fire hydrant when instructed to do so by any member of the police, fire, or other municipal department acting in his/her official capacity.

§2. This local law shall take effect ninety days after its enactment into law, except that the commissioner of transportation shall take all actions necessary for its implementation prior to such effective date.

Referred to the Committee on Transportation.

Int. No. 191

By Council Members Dromm, Barron, Chin, Cornegy, Eugene, Gibson, Johnson, Levine, Mendez and Rose.

A Local Law to amend the administrative code of the city of New York, in relation to requiring the department of youth and community development to review strategies and create a plan of action to protect children who qualify for special immigrant juvenile status.

Be it enacted by the Council as follows:

Section 1. Section 21-401 of the administrative code of the city of New York is amended by adding new subdivisions f, g, and h to read as follows:

f. "Homeless youth" shall have the same meaning as provided in subdivision two of section 532-a of the executive law.

g. "Runaway and homeless youth providers" shall mean department-administered crisis shelters and department-administered transitional independent living facilities.

h. "Runaway youth" shall have the same meaning as provided in subdivision one of section 532-a of the executive law.

§2. Chapter four of title 21 of the administrative code of the city of New York is amended by adding a new section 21-404 to read as follows:

§ 21-404 Special immigrant juvenile status plan. a. The department shall designate one or more individuals to be responsible for creating and implementing a comprehensive plan to provide services to runaway and homeless youth in contact with runaway and homeless youth providers who may be deemed eligible for special immigrant juvenile status or other immigration benefits. Such plan shall, at a minimum, describe how the department and the runaway and homeless youth providers will achieve the following goals: 1. identify the country of birth, to the extent practicable, of runaway and homeless youth in contact with the runaway and homeless youth providers; 2. identify such runaway and homeless youth, as early as possible, who may qualify for special immigrant juvenile status or other immigration benefits; 3. track such runaway and homeless youth, to the extent practicable and consistent with confidentiality requirements, until the completion of their special immigrant juvenile status or other immigration relief; 4. assist such runaway and homeless youth, as soon as they are identified, in obtaining the immigration services they need, including birth certificates if they do not possess them; and 5. provide mandatory training programs on immigration benefits, including special immigrant juvenile status, for runaway and homeless youth provider staff. Such plan shall also include detailed descriptions of (i) program standards for runaway and homeless youth provider staff regarding special immigrant juvenile status identification and coordination of immigration services; (ii) the department's mechanisms and indicators for monitoring the runaway and homeless youth providers' compliance with and achievements under the plan; and (iii) the department's method(s) for collecting data and evaluating outcomes for immigrant runaway and homeless youth under the plan. On or before April 1, 2015 the department shall submit the plan to the city council.

b. Reporting. No later than one year after completion and submission of the plan required by subdivision a of this section, and annually thereafter, the department shall prepare and submit to the city council a report containing (i) an assessment of its ability to identify, track and coordinate immigration services for runaway and homeless youth in contact with runaway and homeless youth providers; (ii) indicators sufficient to show the department's progress towards achieving the goals of the plan; and (iii) such programs, procedures, memoranda, or training materials as concern the implementation and goals of the plan.

§3. This local law shall take effect ninety days after its enactment into law.

Referred to the Committee on Youth Services.

Res. No. 129

Resolution calling on the New York State Assembly to pass and the Governor to sign the Michael Sandy Act, which limits the admissibility of evidence of a defendant and victim falling under the same protected category in hate crime cases.

By Council Members Dromm, Chin, Cornegy, Koo and Mendez.

Whereas, Hate crimes continue to plague New York City and State as evidenced by the May 2013 anti-gay murder of Marc Carson, who was shot at point-blank range as he was enjoying an evening in Manhattan with his friends; and

Whereas, According to the Hate Crime in New York State 2011 Annual Report released in October 2012 by the New York State Division of Criminal Justice Services ("DCJS"), there were 554 reported hate crime incidents in New York State during 2011; and

Whereas, Additionally, according to DCJS's report, the most frequently reported bias motivation for hate crimes against individuals in New York State in 2011 was against gay men, comprising 25.2%; and

Whereas, New York State enacted the Hate Crimes Act of 2000, establishing that an individual commits a hate crime when he or she selects the victim based on the victim's actual or perceived race, color, national origin, ancestry, gender, religion, religious practice, disability or sexual orientation; and

Whereas, The Hate Crimes Act of 2000 is important in that it uses enhanced penalties to send a reassuring message to all other self-identified members of the impacted community; and

Whereas, The prosecution of anti-lesbian, gay, bisexual, and transgender ("LGBT") crimes poses its own set of challenges given the complex nature of sexual orientation and society's understanding of it; and

Whereas, These challenges were highlighted in a 2007 trial in which, according to the *New York Times*, the defendants were accused of searching on a website for a gay man to victimize, deciding upon Michael Sandy, luring him to an isolated location, then proceeding to beat and rob him, and ultimately chasing him into traffic on the Belt Parkway where he was fatally struck by a sports utility vehicle; and

Whereas, According to *New York Magazine*, a group of four men was charged with, and went on trial for, various offenses with hate crime enhancements since they had selected their victim based on his sexual orientation; and

Whereas, According to *New York Magazine*, the lawyer for Anthony Fortunato, one of the defendants, claimed that his client was gay, seemingly in an attempt to use his sexual orientation as a shield from a hate crime conviction; and

Whereas, Such evidence is irrelevant to a conviction under the Hate Crimes Act of 2000 and unduly confused jurors into thinking that Fortunato could not have targeted Michael Sandy if Fortunato himself was gay; and

Whereas, According to a 1996 study published by the American Psychological Association, linking homophobia with homosexual arousal, a homophobe may have guilt about his or her own feelings and struggle to suppress them, and therefore the fact that the perpetrator and the victim share the same sexual orientation can actually motivate the perpetrator to commit a hate crime; and

Whereas, Many jurors may not have sufficient knowledge of LGBT issues to understand that Fortunato's struggles with his own purported sexual orientation could have made him more likely to target Michael Sandy; and

Whereas, A.7549, introduced by Assembly Member Francisco P. Moya and currently pending in the New York State Assembly, and companion bill S.6370, introduced by New York State Senator Brad Hoylman and currently pending in the New York State Senate, seek to amend the criminal procedure law by prohibiting the admissibility of evidence used by defendants to show that they and the victim identify with the same protected category of the Hate Crimes Act; and

Whereas, A.7549/S.6370, also known as "The Michael Sandy Act", prohibits such tactics while allowing the court to make exceptions through separate hearings out of earshot of the jury if the judge determines the information is absolutely necessary to evaluate the case; and

Whereas, Although suspects continue to be prosecuted for hate crimes, there is a fear that this dubious defense tactic will continue to be used unless the Michael Sandy Act is passed; now, therefore, be it

Resolved, That the Council of the City of New York calls on the New York State Assembly to pass and the Governor to sign the Michael Sandy Act, which limits the admissibility of evidence of a defendant and victim falling under the same protected category in hate crime cases.

Referred to the Committee on Fire and Criminal Justice Services.

Res. No. 130

Resolution calling upon the New York State Legislature to pass and the Governor to sign A.6983A/S.4917A, which designates as professional misconduct, engaging in sexual orientation change efforts by mental health care professionals upon patients under 18 years of age.

By Council Members Dromm, Chin, Dickens, Koo, Lander, Levine, Mendez and Rosenthal.

Whereas, The American Psychological Association (APA) defines a mental disorder as a "clinically significant behavioral or psychological syndrome or pattern that occurs in an individual and is associated with present distress or disability or with a significantly increased risk of suffering death, pain, disability, or an important loss of freedom"; and

Whereas, Lesbian, gay, bisexual, and other orientations are not mental disorders; and

Whereas, Homosexuality has been documented in many different cultures and historical eras; and

Whereas, Findings by the APA reveal that the longstanding consensus of the health and mental health professions is that homosexuality is a normal and positive variation of human sexual orientation; and

Whereas, Research by the APA shows that gay men, lesbians, and bisexual individuals form stable, committed relationships and form families that are equivalent to heterosexual relationships and families in essential respects; and

Whereas, Therapies aimed at changing sexual orientation are referred to as curative, reparative, or conversion therapy; and

Whereas, Currently, minors can be forced to undergo conversion therapy by parents and ministers who refuse to accept that they are gay; and

Whereas, A common technique used in curative therapies involves tying homosexual desires to emotional wounds in early childhood and, in some cases, to early sexual abuse; and

Whereas, According to the APA, all major national mental health organizations have officially expressed concerns about therapies promoted to modify sexual orientation; and

Whereas, For example, the American Psychoanalytic Association believes that efforts to repair an individual's sexual orientation are against the fundamental principles of psychoanalytic treatment and often result in substantial psychological pain; and

Whereas, The promotion of curative therapies reinforces stereotypes and contributes to a negative climate for the lesbian, gay, bisexual, and transgender (LGBT) community; and

Whereas, The Human Rights Campaign, the nation's largest LGBT rights organization, has reported significant evidence of harm to LGBT youth resulting from attempts to change their sexual orientation; and

Whereas, For example, LGBT youth whose families reject their sexual orientation are eight times more likely to have attempted suicide, six times more likely to report high levels of depression, three times more likely to use illegal drugs, and three times more likely to be at high risk for HIV and STDs; and

Whereas, An APA task force, Appropriate Therapeutic Responses to Sexual Orientation, released a 2009 report reviewing existing research on the efficacy of reparative therapy and found that there was very little methodologically sound research on sexual orientation change efforts and that it is unlikely these efforts would be able to reduce same-sex attraction; and

Whereas, The APA task force concluded that sexual orientation change efforts can pose critical health risks to lesbian, gay, and bisexual people, including confusion, depression, guilt, helplessness, hopelessness, and a feeling of being dehumanized; and

Whereas, According to the APA, beneficial responses by a therapist treating an individual who is troubled about his or her same-sex attraction include helping that person cope with social prejudice against homosexuality, and successfully resolving issues associated with and resulting from internal conflicts; and

Whereas, Furthermore, mental health professional organizations, such as the APA, call on their members to respect a person's right to self-determination; be sensitive to a client's race, culture, ethnicity, age, gender, gender identity, sexual orientation, religion, socioeconomic status, language, and disability status when working with that client; and eliminate biases based on these factors; and

Whereas, The state of California recently became the first in the nation to enact legislation that would prohibit dangerous and discredited efforts by licensed mental health providers to change the sexual orientation of minor patients and this ban was upheld by the 9th U.S. Circuit Court of Appeals in August 2013; and

Whereas, A.6983A/S.4917A, sponsored by Senator Brad Hoylman and Assembly Member Deborah Glick, would amend the education law to prohibit a mental health professional from engaging in sexual orientation change efforts with a patient under 18 years of age; and

Whereas, This bill would provide that any sexual orientation change efforts attempted on a patient under 18 years of age by a mental health professional shall be considered unprofessional conduct and shall subject the provider to discipline by the provider's licensing entity; and

Whereas, Penalties for misconduct range from temporary censorship and reprimand to revoking of a license, up to $10,000 in fines and community service; and

Whereas, New York State should not permit licensed mental health professionals to practice therapies that have been proven harmful and should take action to prohibit these harmful and discriminatory practices; now, therefore, be it

Resolved, That the Council of the City of New York calls upon the New York State Legislature to pass and the Governor to sign A.6983A/S.4917A, which designates as professional misconduct, engaging in sexual orientation change efforts by mental health care professionals upon patients under 18 years of age.

Referred to the Committee on Health.

Res. No. 131

Resolution calling on Capital One to amend their individual credit card agreements regarding how and when they contact cardholders for debt collection.

By Council Members Espinal, Cornegy, Mendez, Rose and Wills.

Whereas, Capital One is a Fortune 500 company that provides an array of financial services and products to consumers, small businesses and commercial clients; and

Whereas, One of their products is an individual consumer credit card that can be applied for and obtained online or at bank branch locations in seven states, including New York; and

Whereas, According to various news reports, Capital One's 2014 individual cardholder agreement allows them to visit cardholders at their homes and workplaces and contact them at any time for debt collection purposes; and

Whereas, Further, under the same agreement, Capital One states they "may modify or suppress caller ID and similar services and identify [them] selves on these services in any manner [they] choose" for collection purposes; and

Whereas, New York City is home to over eight million residents, many of whom have and use credit cards on a daily basis and make their payments in a timely fashion; and

Whereas, Some consumers find themselves unable to make their credit card payments in a timely manner and while Capital One has every right to make efforts to collect delinquent debts, it should do so in a professional, respectful, above-board manner that doesn't offend and alienate the card holder; and

Whereas, Notwithstanding that there are existing consumer protections against some of the practices referenced in Capital One's credit card agreement, referencing these practices in their agreements or attempting to carrying out such acts is unprofessional, intrusive, invasive and overly aggressive; and

Whereas, Capital One should amend their credit card agreements and require their representatives to disclose their identity when they contact consumers to collect a debt and only contact the consumer by mail or over the phone during reasonable hours; now therefore, be it

Resolved, That the Council of the City of New York calls on Capital One to amend their individual credit card agreements regarding how and when they contact cardholders for debt collection.

Referred to the Committee on Consumer Affairs.

Int. No. 192

By Council Member Ferreras (by request of the Mayor).

A Local Law To amend the administrative code of the city of New York, in relation to amending the district plan of the Downtown-Lower Manhattan business improvement district to change the method of assessment upon which the district charge is based.

Be in enacted by the Council as follows:

Section 1. Chapter 5 of title 25 of the administrative code of the city of New York is amended by adding a new section 25-442.3 to read as follows:

§25-442.3 Downtown-Lower Manhattan business improvement district; amendment of the district plan. a. The city council having determined, pursuant to subdivision b of section 25-410 of chapter four of this title, that it is in the public interest to authorize a change in the method of assessment upon which the district charge in the Downtown-Lower Manhattan business improvement district is based, and the council having determined further that the tax and debt limitations prescribed in section 25-412 of chapter four of this title will not be exceeded by such change, there is hereby authorized in such district such change as is set forth in the amended district plan required to be filed with the city clerk pursuant to subdivision b of this section.

b. Immediately upon adoption of this local law, the council shall file with the city clerk the amended district plan containing the change in the method of assessment authorized by subdivision a of this section.

§ 2. This local law shall take effect immediately and shall be retroactive to and deemed to have been in full force and effect as of January 1, 2014.

Referred to the Committee on Finance.

Int. No. 193

By Council Member Ferreras (by request of the Mayor).

A Local Law To amend the administrative code of the city of New York, in relation to amending the district plan of the Kings Highway business improvement district to authorize additional services and modify existing services for the district.

Be in enacted by the Council as follows:

Section 1. Chapter 5 of title 25 of the administrative code of the city of New York is amended by adding a new section 25-445.1 to read as follows:

§ 25-445.1 Kings Highway business improvement district; amendment to the district plan. a. The city council having determined, pursuant to subdivision b of section 25-410 of chapter four of this title, that it is in the public interest to authorize additional services and modify existing services for the Kings Highway business improvement district, and the council having determined further that the tax and debt limits prescribed in section 25-412 of chapter four of this title will not be exceeded by such changes, there are hereby authorized in the Kings Highway business improvement district such changes as set forth in the amended district plan required to be filed with the city clerk pursuant to subdivision b of this section.

b. Immediately upon adoption of this local law, the council shall file with the city clerk the amended district plan setting forth the additional services and modification of existing services authorized by subdivision a of this section.

§ 2. This local law shall take effect immediately and shall be retroactive to and deemed to have been in full force and effect as of January 1, 2014.

Referred to the Committee on Finance.

Int. No. 194

By Council Member Ferreras (by request of the Mayor).

A Local Law to amend the administrative code of the city of New York, in relation to amending the district plan of the Church Avenue business improvement district to authorize additional services and modify existing services for the district.

Be in enacted by the Council as follows:

Section 1. Chapter 5 of title 25 of the administrative code of the city of New York is amended by adding a new section 25-451.1 to read as follows:

§ 25-451.1 Church Avenue business improvement district; amendment to the district plan. a. The city council having determined, pursuant to subdivision b of section 25-410 of chapter four of this title, that it is in the public interest to authorize additional services and modify existing services for the Church Avenue business improvement district, and the council having determined further that the tax and debt limits prescribed in section 25-412 of chapter four of this title will not be exceeded by such changes, there are hereby authorized in the Church Avenue business improvement district such changes as set forth in the amended district plan required to be filed with the city clerk pursuant to subdivision b of this section.

b. Immediately upon adoption of this local law, the council shall file with the city clerk the amended district plan setting forth the additional services and modification of existing services authorized by subdivision a of this section.

§ 2. This local law shall take effect immediately and shall be retroactive to and deemed to have been in full force and effect as of January 1, 2014.

Referred to the Committee on Finance.

Int. No. 195

By Council Members Ferreras, Barron, Cabrera, Dickens, Gentile, Mendez, Miller, Richards, Wills and Koslowitz.

A Local Law to amend the administrative code of the city New York, in relation to requiring the department of environmental protection to notify water customers who are owners of tax class two properties, by mail, of large charges that could indicate a potential leak.

Be it enacted by the Council as follows:

Section 1. Subdivision a of section 24-337 of the administrative code of the city of New York is amended to read as follows:

§ 24-337 Waste of water prohibited; remedies. a. It shall be unlawful for water to be wasted, whether owing to leak or wasteful condition, regardless of fault, from any water pipe, valve, faucet, conduit, equipment, facility or device connected to the city water system or which utilizes city water. It shall be the duty of an owner, lessee, agent, manager, operator and of any other person in charge of or who has control over any premises, plant, equipment, facility, device or operation to make frequent regular inspections so as to minimize the likelihood of leak or waste and within a reasonable time after the discovery or notification of any leak or wasteful condition to effect repairs or take other appropriate corrective action within the power of such person. *When the commissioner of environmental protection determines that the water usage for a property classified in tax class two, as defined by section 1802 of the New York state real property tax law, is unusually high or low during any billing*

cycle, the commissioner shall send a written notice with the bill for the payment of water charges, and print a notice on the envelope in which the bill is mailed, to the owner of such property. The commissioner shall promulgate such reasonable rules and regulations as the commissioner may from time to time deem appropriate for the prevention of the waste of water.

§2. This local law shall take effect immediately upon its enactment into law.

Referred to the Committee on Environmental Protection.

Res. No. 132

Resolution concerning an amendment to the District Plan of the Downtown-Lower Manhattan Business Improvement District that provides for a change in the method of assessment upon which the district charge is based, and setting the date, time and place for the public hearing of the local law authorizing a change in the method of assessment upon which the district charge in the Downtown-Lower Manhattan Business Improvement District is based.

By Council Member Ferreras.

Whereas, pursuant to chapter 4 of title 25 of the Administrative Code of the City of New York (the "BID Law"), the City established the Downtown-Lower Manhattan Business Improvement District in the City of New York; and

Whereas, pursuant to Local Law No. 82 for the year 1990, the City Council assumed responsibility for adopting legislation relating to Business Improvement Districts; and

Whereas, pursuant to Section 25-410(b) of the Law, an amendment to the District Plan that provides for any change in the method of assessment upon which the district charge is based may be adopted by local law, provided that the City Council determines, after a public hearing, that it is in the public interest to authorize such change and that the tax and debt limits prescribed in Section 25-412 of the BID Law will not be exceeded by such change; and

Whereas, the Downtown-Lower Manhattan Business Improvement District wishes to amend the District Plan in order to provide for a change in the method of assessment upon which the district charge is based; and

Whereas, pursuant to Section 25-410(b) of the BID Law, the City Council is required to give notice of the public hearing by publication of a notice in at least one newspaper having general circulation in the district specifying the time when and the place where the hearing will be held and stating the proposed change in the method of assessment upon which the district charge in the Downtown-Lower Manhattan Business Improvement District is based; now, therefore, be it

Resolved, that the Council of the City of New York, pursuant to Section 25-410(b) of the BID Law, hereby directs that:

(i) _____ is the date and the City Council Committee Meeting Room, 2nd floor, City Hall, is the place and _____ is the time for a public hearing (the "Public Hearing") to hear all persons interested in the legislation that would authorize a change in the method of assessment upon which the district charge in the Downtown-Lower Manhattan Business Improvement District is based; and

(ii)On behalf of the City Council and pursuant to Section 25-410(b) of the BID Law, the District Management Association of the Downtown-Lower Manhattan Business Improvement District is hereby authorized to publish in a newspaper of general circulation in the district, not less than ten (10) days prior to the Public Hearing, a notice stating the time and place of the Public Hearing and stating the proposed change in the method of assessment upon which the district charge in the Downtown-Lower Manhattan Business Improvement District is based.

Referred to the Committee on Finance.

Res. No. 133

Resolution concerning an amendment to the District Plan of the Kings Highway Business Improvement District that authorizes additional services and modifies existing services for the district, and setting the date, time and place for the public hearing of the local law authorizing additional services and modifying existing services for the district.

By Council Member Ferreras.

WHEREAS, pursuant to the authority formerly granted to the Board of Estimate by chapter 4 of title 25 of the Administrative Code of the City of New York or the predecessor of such Chapter (the "BID Law"), the Board of Estimate, by Resolution dated August 19, 1982 (Calendar No. 285) provided for the preparation of a district plan (the "District Plan") for the Kings Highway Business Improvement District (the "District") in the City of New York; and

WHEREAS, the Board of Estimate, by Resolution dated May 23, 1989 (Calendar No. 386) authorized the establishment of the District in accordance with the District Plan; and

WHEREAS, pursuant to Local Law No. 82 for the year 1990, the City Council assumed responsibility for adopting legislation relating to Business Improvement Districts; and

WHEREAS, pursuant to section 25-410(b) of the BID Law, an amendment to the District Plan that provides for additional improvements or services may be adopted by local law, provided that the City Council determines, after a public hearing, that it is in the public interest to authorize such changes and that the tax and debt limits prescribed in section 25-412 of the BID Law will not be exceeded by such changes; and

WHEREAS, the Kings Highway Business Improvement District wishes to amend the District Plan, as amended, in order to authorize additional services and modify existing services for the District; and

WHEREAS, pursuant to section 25-410(b) of the BID Law, the City Council is required to give notice of the public hearing by publication of a notice in at least one newspaper having general circulation in the District specifying the time when and the place where the hearing will be held; now, therefore, be it

RESOLVED, that the Council of the City of New York, pursuant to section 25-410(b) of the BID Law hereby directs that:

(i)_____ is the date and the City Council Committee Room, 16th floor, 250 Broadway, is the place and _____ is the time for a public hearing (the "Public Hearing") to hear all persons interested in the legislation that would authorize additional services and modify existing services for the District; and

(ii)on behalf of the City Council and pursuant to section 25-410(b) of the BID Law, the District Management Association of the Kings Highway Business Improvement District is hereby authorized to publish in a newspaper of general circulation in the District, not less than ten (10) days prior to the Public Hearing, a notice stating the time and place of the Public Hearing and stating the proposed amendment to the District Plan authorizing additional services and modifying existing services for the Kings Highway Business Improvement District.

Referred to the Committee on Finance.

Res. No. 134

Resolution concerning an amendment to the District Plan of the Church Avenue Business Improvement District that authorizes additional services and modifies existing services for the district, and setting the date, time and place for the public hearing of the local law authorizing additional services and modifying existing services for the district.

By Council Member Ferreras.

WHEREAS, pursuant to the authority formerly granted to the Board of Estimate by chapter 4 of title 25 of the Administrative Code of the City of New York or the predecessor of such Chapter (the "BID Law"), the Board of Estimate, by Resolution dated August 19, 1982 (Calendar No. 285) provided for the preparation of a district plan (the "District Plan") for the Church Avenue Business Improvement District (the "District") in the City of New York; and

WHEREAS, the Board of Estimate, by Resolution dated August 14, 1986 (Calendar No. 315) authorized the establishment of the District in accordance with the District Plan; and

WHEREAS, pursuant to Local Law No. 82 for the year 1990, the City Council assumed responsibility for adopting legislation relating to Business Improvement Districts; and

WHEREAS, pursuant to section 25-410(b) of the BID Law, an amendment to the District Plan that provides for additional improvements or services may be adopted by local law, provided that the City Council determines, after a public hearing, that it is in the public interest to authorize such changes and that the tax and debt limits prescribed in section 25-412 of the BID Law will not be exceeded by such changes; and

WHEREAS, the Church Avenue Business Improvement District wishes to amend the District Plan, as amended, in order to authorize additional services and modify existing services for the District; and

WHEREAS, pursuant to section 25-410(b) of the BID Law, the City Council is required to give notice of the public hearing by publication of a notice in at least one newspaper having general circulation in the District specifying the time when and the place where the hearing will be held; now, therefore, be it

RESOLVED, that the Council of the City of New York, pursuant to section 25-410(b) of the BID Law hereby directs that:

(i)_____ is the date and the City Council Committee Room, 16th floor, 250 Broadway, is the place and _____ is the time for a public hearing (the "Public Hearing") to hear all persons interested in the legislation that would authorize additional services and modify existing services for the District; and

(ii)on behalf of the City Council and pursuant to section 25-410(b) of the BID Law, the District Management Association of the Church Avenue Business Improvement District is hereby authorized to publish in a newspaper of general circulation in the District, not less than ten (10) days prior to the Public Hearing, a notice stating the time and place of the Public Hearing and stating the proposed amendment to the District Plan authorizing additional services and modifying existing services for the Church Avenue Business Improvement District.

Referred to the Committee on Finance.

Preconsidered Res. No. 135

Resolution approving the new designation and changes in the designation of certain organizations to receive funding in the Expense Budget.

By Council Member Ferreras.

Whereas, On June 27, 2013 the Council of the City of New York (the "City Council") adopted the expense budget for fiscal year 2014 with various programs and initiatives (the "Fiscal 2014 Expense Budget"); and

Whereas, The City Council is hereby implementing and furthering the appropriations set forth in the Fiscal 2014 Expense Budget by approving the new designation and changes in the designation of certain organizations receiving local, aging and youth discretionary funding, and by approving the new designation and changes in the designation of certain organizations to receive funding pursuant to certain initiatives in accordance therewith; and

Whereas, The City Council is hereby implementing and furthering the appropriations set forth in the Fiscal 2014 Expense Budget by approving new Description/Scope of Services for certain organizations receiving local, aging, and youth discretionary funding; and

Whereas, On June 28, 2012 the Council of the City of New York (the "City Council") adopted the expense budget for fiscal year 2013 with various programs and initiatives (the "Fiscal 2013 Expense Budget"); and

Whereas, The City Council is hereby implementing and furthering the appropriations set forth in the Fiscal 2014 Expense Budget by approving the new designation and changes in the designation of certain organizations receiving local, aging and youth discretionary funding, and by approving the new designation and changes in the designation of certain organizations to receive funding pursuant to certain initiatives in accordance therewith; and

Whereas, On June 29, 2011 the Council of the City of New York (the "City Council") adopted the expense budget for fiscal year 2014 with various programs and initiatives (the "Fiscal 2012 Expense Budget"); and

Whereas, The City Council is hereby implementing and furthering the appropriations set forth in the Fiscal 2012 Expense Budget by approving the new designation and changes in the designation of certain organizations receiving local, aging and youth discretionary funding, and by approving the new designation and changes in the designation of certain organizations to receive funding pursuant to certain initiatives in accordance therewith; and

Whereas, The City Council is hereby implementing and furthering the appropriations set forth in the Fiscal 2013 Expense Budget by approving new Description/Scope of Services for certain organizations receiving local and aging discretionary funding; now therefore be it

Resolved, That the City Council approves the new designation and changes in the designation of certain organizations receiving local discretionary funding in accordance with the Fiscal 2014 Expense Budget, as set forth in Chart 1; and be it further

Resolved, That the City Council approves the new designation and changes in the designation of certain organizations receiving youth discretionary funding in accordance with the Fiscal 2014 Expense Budget, as set forth in Chart 2; and be it further

Resolved, That the City Council approves the new designation and changes in the designation of certain organizations receiving funding pursuant to the Discretionary Child Care Initiative in accordance with the Fiscal 2014 Expense Budget, as set forth in Chart 3; and be it further

Resolved, That the City Council approves the new designation and changes in the designation of a certain organization receiving funding pursuant to the Cultural After School Adventure Initiative in accordance with the Fiscal 2014 Expense Budget, as set forth in Chart 4; and be it further

Resolved, That the City Council approves the new designation and changes in the designation of a certain receiving funding pursuant to the Adult Literacy Services Initiative in accordance with the Fiscal 2014 Expense Budget, as set forth in Chart 5; and be it further

Resolved, That the City Council approves the new designation and changes in the designation of certain organizations receiving funding pursuant to the Obesity Prevention Initiative in accordance with the Fiscal 2014 Expense Budget, as set forth in Chart 6; and be it further

Resolved, That the City Council approves the new designation and changes in the designation of certain organizations receiving funding pursuant to the Child Care Vouchers Initiative in accordance with the Fiscal 2014 Expense Budget, as set forth in Chart 7; and be it further

Resolved, That the City Council approves the new designation and changes in the designation of certain organizations receiving funding pursuant to the Anti-Gun Violence Initiative/Gun Buy Back Program in accordance with the Fiscal 2014 Expense Budget, as set forth in Chart 8; and be it further

Resolved, That the City Council approves the new designation and changes in the designation of certain organizations receiving funding pursuant to the Mental Hygiene Contracted Services Partial PEG Restoration - Chemical Dependency/ADUPCT in accordance with the Fiscal 2012 Expense Budget, as set forth in Chart 9; and be it further

Resolved, That the City Council approves the new Description/Scope of Services for certain organizations receiving local, aging, and youth discretionary funding in accordance with the Fiscal 2014 Expense Budget, as set forth in Chart 10; and be it further

Resolved, That the City Council approves the new Description/Scope of Services for certain organizations receiving local and aging discretionary funding in accordance with the Fiscal 2013 Expense Budget, as set forth in Chart 11.

Adopted by the Council (preconsidered by the Committee o Finance; for text of the Exhibits, please see the attachment to the resolution following the Report of the Committee on Finance for Res No. 135 printed in these Minutes).

Int. No. 196

By Council Members Greenfield, Constantinides, Gentile and Lancman.

A Local Law to amend the administrative code of the city of New York, in relation to allowing community boards to determine whether parking meter regulations are in effect on Saturday or Sunday.

Be it enacted by the Council as follows:

Section 1. Section 19-167 of subchapter 2 of chapter 1 of title 19 of the administrative code of the city of New York is amended to read as follows:

§ 19-167. Suspending the activation of parking meters on Sundays *or Saturdays*. Notwithstanding any other provision of law, no person parking a vehicle at a parking meter is required to activate such meter on a Sunday and no notice of violation or summons may be issued solely for the failure to activate such parking meter, *except that, upon written request from a community board, the department shall change the suspension of parking meters from Sunday to Saturday in the community district represented by such community board.*

§ 2. This local law shall take effect immediately**.**

Referred to the Committee on Transportation.

Int. No. 197

By Council Members Johnson, Chin, Levine, Mendez, Wills and Rosenthal.

A Local Law to amend the New York city charter and the administrative code of the city of New York, in relation to retaliatory personnel actions by employers and wage transparency.

Be it enacted by the Council as follows:

Section 1. Subdivision (e) of section 2203 of the New York city charter, as added by local law number 46 for the year 2013, is hereby amended to read as follows:

(e) The commissioner shall have all powers as set forth in [chapter] *chapters* 8 *and 9* of title 20 of the administrative code relating to the receipt, investigation, and resolution of complaints thereunder regarding earned sick time *and wage transparency* and the power to conduct investigations regarding violations of such chapter upon his or her own initiative.

§ 2. Paragraph (1) of subdivision (h) of section 2203 of the New York city charter, as relettered by local law number 46 for the year 2013, is hereby amended to read as follows:

(h)(1) Notwithstanding any inconsistent provision of law, the department shall be authorized, upon due notice and hearing, to impose civil penalties for the violation of any laws or rules the enforcement of which is within the jurisdiction of the department pursuant to this charter, the administrative code or any other general, special or local law. The department shall have the power to render decisions and orders and to impose civil penalties for all such violations, and to order equitable relief for and payment of monetary damages in connection with enforcement of

[chapter] *chapters* 8 *and 9* of title 20 of the administrative code. Except to the extent that dollar limits are otherwise specifically provided, such civil penalties shall not exceed five hundred dollars for each violation. All proceedings authorized pursuant to this subdivision shall be conducted in accordance with rules promulgated by the commissioner. The remedies and penalties provided for in this subdivision shall be in addition to any other remedies or penalties provided for the enforcement of such provisions under any other law including, but not limited to, civil or criminal actions or proceedings.

§ 3. Title 20 of the administrative code of the city of New York is amended by adding a new chapter 9 to read as follows:

CHAPTER 9

Wage Transparency

§ 20-930 ***Definitions.*** *When used in this chapter, the following terms shall be defined as*

a. "Employee" shall mean any "employee" as defined in section 190(2) of the labor law who is employed for hire within the city of New York for more than eighty hours in a calendar year who performs work on a full-time or part-time basis, including work performed in a transitional jobs program pursuant to section 336-f of the social services law, but not including work performed as a participant in a work experience program pursuant to section 336-c of the social services law, and not including those who are employed by (i) the United States government; (ii) the state of New York, including any office, department, independent agency, authority, institution, association, society or other body of the state including the legislature and the judiciary; or (iii) the city of New York or any local government, municipality or county or any entity governed by general municipal law section 92 or county law section 207.

b. "Employer" shall mean any "employer" as defined in section 190(3) of the labor law, but not including (i) the United States government; (ii) the state of New York, including any office, department, independent agency, authority, institution, association, society or other body of the state including the legislature and the judiciary; or (iii) the city of New York or any local government, municipality or county or any entity governed by general municipal law section 92 or county law section 207.

c. "Retaliation" shall mean any threat, discipline, discharge, demotion, suspension, reduction in employee hours, or any other adverse employment action against any employee for exercising or attempting to exercise any right guaranteed under this chapter.

§ 20-931 ***Right to wage transparency.*** *a. It shall be an unlawful employment practice to discharge, demote, retaliate, interfere, intimidate, threaten or discriminate against any employee because the employee inquired about, disclosed, compared or otherwise discussed the employee's wages or employee benefits, or the wages or employee benefits of any other employee, or aided or encouraged any other employee to exercise his or her rights under this chapter, provided that any such wage or benefit information was obtained in a lawful manner.*

b. It shall be an unlawful employment practice to require an employee or prospective employee to sign a waiver or other document that purports to deny the employee the right to disclose the amount of his or her wages, salary, or paid benefits.

c. Nothing in this chapter shall require an employer to disclose confidential wage and employee benefit information to anyone other than the employee to whom it pertains.

§ 20-932 ***Retaliation and interference prohibited****. No employer shall engage in retaliation or threaten retaliation against an employee for exercising or attempting to exercise any right provided pursuant to this chapter, or interfere with any investigation, proceeding or hearing pursuant to this chapter. The protections of this chapter shall apply to any person who mistakenly but in good faith alleges a violation of this chapter. Rights under section 20-931 of this chapter shall include, but not be limited to, the right to file a complaint for alleged violations of this chapter with the department, communicate with any person about any violation of this chapter, participate in any administrative or judicial action regarding an alleged violation of this chapter, or inform any person of his or her potential rights under this chapter.*

§ 20-933 ***Notice of rights****. a. An employer shall provide any new employee at the commencement of employment or any existing employee within thirty days of the effective date of this local law, with written notice of such employee's right to wage transparency pursuant to this chapter, including the right to be free from retaliation and to bring a complaint to the department. Such notice shall be in English and the primary language spoken by that employee, provided that the department has made available a translation of such notice in such language pursuant to subdivision b of this section. Instead of providing each employee with such notice, an employer may instead conspicuously post such notice at such employer's place of business in an area accessible to employees.*

b. The department shall create and make available notices that contain the information required pursuant to subdivision a of this section. Such notices shall be posted in a downloadable format on the department's website in Chinese, English, French-Creole, Italian, Korean, Russian, Spanish and any other language deemed appropriate by the department.

§ 20-934 ***Enforcement and penalties****. a. The department shall enforce the provisions of this chapter and investigate complaints received by the department in a timely manner.*

b. Any person alleging a violation of this chapter shall have the right to file a complaint with the department within 180 days of the date the person knew or should have known of the alleged violation. The department shall maintain confidential the identity of any complainant unless disclosure of such complainant's identity is necessary for resolution of the investigation or otherwise required by law. The department shall, to the extent practicable, notify such complainant that the department will be disclosing his or her identity prior to such disclosure.

c. Upon receiving a complaint alleging a violation of this chapter, the department shall investigate such complaint and attempt to resolve it through mediation. The department shall keep complainants reasonably notified regarding the status of their complaint and any resultant investigation. If the department believes that a violation has occurred, it shall issue to the offending person or entity a notice of violation. The commissioner shall prescribe the form and wording of such notices of violation. The notice of violation shall be returnable to the administrative tribunal authorized to adjudicate violations of this chapter.

d. The department shall have the power to impose penalties provided for in this chapter and to grant an employee or former employee all appropriate relief. Any entity or person found to be in violation of the provisions of this chapter shall be liable for a civil penalty payable to the city not to exceed five hundred dollars for the first violation and, for subsequent violations that occur within two years of any previous violation, not to exceed seven hundred and fifty dollars for the second violation and not to exceed one thousand dollars for each succeeding violation.

§ 4. This local law shall take effect 180 days after it is enacted and the commissioner of consumer affairs shall take such measures as are necessary for its implementation, including the promulgation of rules, prior to such effective date.

Referred to the Committee on Civil Service and Labor.

Int. No. 198

By Council Members Johnson, Rodriguez, Ferreras, Lander and Rose.

A Local Law to amend the administrative code of the city of New York, in relation to side guards.

Be it enacted by the Council as follows:

Section 1. Title 19 of the administrative code of the city of New York is amended by adding a new chapter 8 to read as follows:

Chapter 8. Trucks and Tractors.

§ 19-801. Definitions.

§ 19-802. Side guards.

§ 19-801. Definitions. For the purposes of this chapter, the following terms shall be defined as follows:

a. "Side guard" means a structure that when fit to the side of a tractor or truck, shall help prevent a person from being swept beneath such tractor or truck.

b. "Tractor" has the meaning set forth in section 151-a of vehicle and traffic law.

c. "Truck" has the meaning set forth in section 158 of vehicle and traffic law.

§ 19-802. Side guards. All tractors and trucks loading and unloading items within the city shall be equipped with side guards.

§ 2. This local law shall take effect one hundred twenty days after its enactment.

Referred to the Committee on Transportation.

Res. No. 136

Resolution calling on the New York State Assembly to pass A.3941-A, the New York State Senate to introduce and pass a companion bill, and the Governor to sign such legislation into law, which would create the Children's Weapon Accident Prevention Act.

By Council Members Johnson, Chin, Cornegy, Gentile, Gibson, Levine, Mendez and Rosenthal.

Whereas, Unintended firearm related injuries and deaths are a national and local problem affecting many Americans and New Yorkers on a daily basis; and

Whereas, According to the Centers for Disease Control and Prevention, in 2010, there were 369 firearm related deaths in the United States among children ages one to fourteen; and

Whereas, According to various firearm safety experts, it is believed that establishing proper weapon safety procedures, such as equipping a gun with a child proof safety-lock, would drastically decrease accidental firearm injuries and fatalities; and

Whereas, In an effort to stem firearm related injuries and fatalities, New York State must increase its firearm safeguards to better protect our children and their families; and

Whereas, A.3941-A, introduced by Assemblyman Harvey Weisenberg and currently pending in the New York State Assembly, would amend New York State's Penal, General Business and Education Laws in an effort to enhance protection from firearms; and

Whereas, A.3941-A is also known as the Children's Weapon Accident Prevention Act ("The Act"); and

Whereas, The Act would amend the New York State Penal Law by creating new crimes: including, (i) failure to store a weapon safely in the second and first degree; (ii) aggravated failure to store a weapon safely resulting in the removal or discharge of the weapon by a child; and (iii) criminally negligent storage of a weapon in the second degree resulting in a child causing serious physical injury to themselves or any other individual, which would be a Class E Felony; and (iv) criminally negligent storage of a weapon in the first degree resulting in a child causing their own death or the death of any other individual, which would be a Class D Felony; and

Whereas, The Act would amend the New York State Education Law by requiring the commissioner of the State's Department of Education to develop a weapon safety program designed to teach children how to prevent gun-related injuries; and

Whereas, The Act would amend the New York State General Business Law by requiring gun dealers to post a conspicuous notice that it is a crime in New York to leave guns accessible to children; and

Whereas, The Act would help prevent New York's children from possessing loaded firearms and help save lives of innocent youth; now, therefore, be it

Resolved, That the Council of the City of New York calls on the New York State Assembly to pass A.3941-A, the New York State Senate to introduce and pass a companion bill, and the Governor to sign such legislation into law, which would create the Children's Weapon Accident Prevention Act.

Referred to the Committee on Public Safety.

Int. No. 199

By Council Members Koo, Chin, Dickens, Eugene, Gentile, Johnson, Lancman, Levine, Mendez, Rose, Vallone, Wills, Koslowitz, Rosenthal and Ulrich.

A Local Law to amend the administrative code of the city of New York, in relation to community board notification prior to installing or removing traffic calming devices or installing traffic control signals or devices.

Be it enacted by the Council as follows:

Section 1. Subchapter 3 of chapter 1 of title 19 of the administrative code of the city of New York is amended by adding a new section 19-190 to read as follows:

§ 19-190 Community board notification prior to installing or removing traffic calming devices or traffic control signals or devices. a. For the purposes of this section, "traffic calming device" shall have the same meaning as in section 19-183 of this subchapter.

b. Not less than forty-five days prior to the proposed installation or removal of a traffic calming device by the department or at the behest of the department, or prior to the undertaking of a study by the department or at the behest of the department to determine whether a traffic control signal or device would be warranted at a location pursuant to the manual on uniform traffic control signals or devices, the department shall notify via facsimile and electronic mail the respective community board or boards having jurisdiction of the location where such traffic calming device or traffic control signal or device is proposed to be installed or removed. From the time of such notification to the time of such proposed installation or removal, such community board may provide comments regarding such proposed installation or removal to the department.

§ 2. This local law shall take effect immediately.

Referred to the Committee on Transportation.

Int. No. 200

By Council Members Koo, Dickens, Mendez, Rose and Vallone.

A Local Law to amend the administrative code of the city of New York, in relation to free parking during nighttime hours.

Be it enacted by the Council as follows:

Section 1. Subchapter 2 of chapter 1 of title 19 of the administrative code of the city of New York is amended to add a new section 19-167.4 to read as follows:

§ 19-167.4 Parking fees during nighttime hours. Notwithstanding any local law or regulation to the contrary, there shall be no monetary fee to park a vehicle on any street in New York city between the hours of 7 p.m. and 8 a.m., except that penalties may be assessed in locations where parking is not permitted during such hours.

§2. This local law shall take effect immediately upon its enactment into law.

Referred to the Committee on Transportation.

Int. No. 201

By Council Member Koo.

A Local Law to amend the administrative code of the city of New York, in relation to the reuse or recycling of discarded carpeting from commercial units or buildings.

Be it enacted by the Council as follows:

Section 1. Title 16 of the administrative code of the city of New York is amended by adding a new chapter 4-F to read as follows:

CHAPTER 4-F

16-490 Definitions

16-491 Disposal ban

16-492 Source separation

16-493 Collection

16-494 Delivery

16-495 List of carpet recycling companies

16-496 Certificate of recycling

16-497 Carpet recycling company obligations

16-498 Enforcement

§16-490 Definitions. When used in this chapter the following terms shall have the following meanings:

a. "Conforming project" means a construction, alteration, demolition or other such project within the city in which carpeting covering a floor space equal to ten thousand or more square feet within the same commercial building or unit is to be removed as part of the same project.

b. "Covered carpeting" means carpeting that has been or will be removed from a commercial unit or building as part of a conforming project.

c. "Responsible party" means the owner, tenant, carpet retailer, carpet installer, general contractor, subcontractor, or any other party who is responsible for ensuring the proper disposal of the refuse generated by a conforming project.

d. "Recycle" has the same meaning as in section 16-303 of this title.

e. "Reuse" means the use of carpeting in a manner that retains the original purpose and performance characteristics of the carpeting.

f. "Carpet recycling company" shall mean an individual, company or other entity that (i) refurbishes or otherwise processes carpeting for reuse or resale, or (ii) removes, separates, or otherwise extracts components or commodities from carpeting either by manual or mechanical separation or by changing the physical or chemical composition of such carpeting for the purpose of reusing or recycling such components or commodities.

g. "Licensed carter" means the holder of a valid license issued pursuant to section 16-505 of this title.

h. "Source separation" has the same meaning as in section 16-303 of this title.

§ 16-491 Disposal ban. On and after January first, two thousand fifteen, no person shall dispose of covered carpeting within the city as solid waste.

§ 16-492 Source separation. On and after January first, two thousand fifteen, a responsible party shall ensure that all covered carpeting is separated and kept separate from all solid waste produced as a result of a conforming project.

§ 16-493 Collection. a. On and after January first, two thousand fifteen, a responsible party shall arrange for the collection and transportation for reuse or recycling of all covered carpeting pursuant to the terms of this chapter through a licensed carter or a carpet recycling company.

b. No carpet recycling company may collect covered carpeting within the city unless it is licensed in accordance with section 16-505 of this chapter.

§ 16-494 Delivery. Any licensed carter that collects source separated covered carpeting shall deliver such carpeting to a carpet recycling company.

§ 16-495 List of carpet recycling companies. On and after December first, two thousand fourteen, the department shall maintain and regularly update a list of carpet recycling companies. Such list shall include the name, address and contact information for each carpet recycling company, and shall be maintained on the department website. Upon request, the department shall distribute a printed copy of such list by mail.

§ 16-496 Certificate of recycling. a. On and after January first, two thousand fifteen, within thirty days of collection of the covered carpeting by a licensed carter or carpet recycling company, a responsible party shall submit to the commissioner a certificate for each conforming project for which it is responsible which shall include:

1. the location of the conforming project;

2. the amount of carpeting, calculated either by weight or area, collected at the conforming project;

3. the name of the licensed carter or carpet recycling company that collected and was to deliver the covered carpeting;

4. the name of the carpet recycling company to which the covered carpeting was delivered, if known;

5. any other information required by department rules; and

6. a sworn affidavit by a qualified representative of the responsible party attesting that:

i. the responsible party adhered to the source separation and collection requirements of this chapter; and

ii. the information provided by the responsible party is accurate.

b. On and after January first, two thousand fifteen, a licensed carter or carpet recycling company that collects covered carpeting from within the city pursuant to this chapter shall submit to the commissioner a certificate for each conforming project from which it collects covered carpeting which shall include:

1. the location of the conforming project from which the covered carpeting was collected;

2. the name of the responsible party;

3. the amount of carpeting, calculated either by weight or area, collected at the conforming project;

4. the name of the carpet recycling company where the covered carpeting was delivered, if different than the entity that collected the carpeting;

5. any other information required by department rules; and

6. an affirmation by a qualified representative of the licensed carter or carpet recycling company averring that:

i. the licensed carter or carpet recycling company adhered to the collection and delivery requirements of this chapter; and

ii. the information provided by the licensed carter or carpet recycling company is an honest reporting.

§ 16-497 Carpet recycling company obligations. Any carpet recycling company receiving covered carpeting shall (1) recycle, reuse, or sell for reuse, or cause to be recycled, reused or sold for reuse all source separated covered carpeting received by such operators that have been separated as required by section 16-492 of this chapter; or (2) at a minimum, maintain the separation of such covered carpeting before their transfer to another location; and (3) not bring source separated covered carpeting for disposal, or cause such materials to be brought for disposal, to any solid waste disposal facility, whether or not such facility is operated by the department, in an amount that should have been detected through reasonable inspection efforts by such operators.

§ 16-498 Enforcement. a. Any notice of violation alleging a violation of any provision of this chapter shall be returnable to the environmental control board, which shall have the power to impose civil penalties as provided herein.

b. On and after January first, two thousand fifteen, any person or entity who violates the provisions of sections 16-491, 16-492 or 16-493 of this chapter shall be liable for a civil penalty of five thousand dollars for each conforming project for which such person or entity improperly disposes of covered carpeting, fails to source separate such covered carpeting, or fails to observe the collection requirements of this chapter.

c. On and after January first, two thousand fifteen, any person or entity who violates the provisions of subdivision a of section 16-494 of this chapter shall be liable for a civil penalty of five thousand dollars for each conforming project for which such person or entity fails to properly deliver covered carpeting pursuant to the requirements of this chapter.

d. On and after January first, two thousand fifteen, any person or entity who violates the provisions of subdivision b of section 16-494 of this chapter shall be liable for a civil penalty of five hundred dollars for each conforming project for which such person or entity fails to properly mark, tag, segregate or otherwise identify covered carpeting as revised by such subdivision.

e. On and after January first, two thousand fifteen, any person or entity who fails to submit a certificate of recycling pursuant to section 16-496 of this chapter shall be liable for a civil penalty of ten thousand dollars for each conforming project for which the person or entity fails to submit a certificate.

f. On and after January first, two thousand fifteen, any person or entity who knowingly submits a certificate of recycling as required by section 16-496 of this chapter that contains a false or misleading statement as to a material fact or omits to state any material fact shall be liable for a civil penalty of five thousand dollars for each such statement or omission.

g. Any carpet recycling company which fails to comply with the provisions of section 16-497 shall be liable for a civil penalty of twenty thousand dollars for each such violation.

§2. This local law shall take effect immediately upon its enactment.

Referred to the Committee on Sanitation and Solid Waste Management.

Int. No. 202

By Council Member Koo.

A Local Law to amend the administrative code of the city of New York, in relation to public access stairways.

Be it enacted by the Council as follows:

Section 1. Section 28-101.4.3 of the administrative code, as amended by local law 141 for the year 2013, is amended to add a new exception 18, to read as follows:

*18. **Alterations requiring compliance with public access stairway provisions.** Where the cost of alteration equals or exceeds 60 percent of the value of the building, a public access stairway shall be designated in accordance with Section 1009.15 of the New York city building code and compliance with Section 1009.15 shall be required. Such stairway shall be subject to special provisions for prior code buildings as set forth in such section. For the purposes of this exception, the cost of alterations shall be determined by adding the estimated cost of the proposed alteration, excluding minor alterations and ordinary repairs, computed as of the time of submitting the application for construction document approval, to the actual cost of any and all alterations made in the preceding 12-month period. Where the proposed alteration includes an enlargement, the value of such alteration shall include the cost of the enlargement.*

§2. Section 403.5.3 of the New York city building code, as amended by local law 141 for the year 2013, is amended to read as follows:

403.5.3 Stairway door operation. Doors opening into interior stair enclosures shall not be locked from either side. However, a door locked from the stair side may be permitted provided that such door is equipped with an automatic fail safe system for opening in the event of the activation of any automatic fire detection system, or when any elevator recall is activated, or when any signal is received from the fire command center. Such door shall be deemed as openable from the stair side. Stair reentry signs shall be posted throughout the stairway indicating that reentry is provided only during fire emergencies. Such signs shall be in accordance with Section 1030.4.2.

Exception: *Public access stairway door operation shall comply with Section 1008.1.9.10.*

§3. Section 1002.1 of the New York city building code, as amended by local law 141 for the year 2013, is amended by adding two new definitions, in alphabetical order, to read as follows:

PUBLIC ACCESS STAIRWAY DOOR SIDELIGHTS. *Fixed transparent panels, which form part of a fire door assembly and are immediately adjacent to the vertical edge of an opening in which a public access stairway door is located.*

STAIRWAY, PUBLIC ACCESS. *A continuous interior stairway that complies with Section 1009.15 and enables building occupants to utilize stairs to travel between the building entrance level and other levels.*

§4. Section 1008.1.9.10 of the New York city building code, as amended by local law 141 for the year 2013, is amended to read as follows:

1008.1.9.10 Stairway doors. Interior stairway means of egress doors, *including public access stairway doors,* shall be openable from both sides without the use of a key or special knowledge or effort.

Exceptions:

[1. Stairway discharge doors shall be openable from the egress side and shall only be locked from the opposite side.

2. This section shall not apply to doors arranged in accordance with Section 403.5.3.

3. In stairways serving not more than four stories, doors are permitted to be locked from the side opposite the egress side, provided they are openable from the egress side and capable of being unlocked simultaneously without unlatching upon a signal from the fire command center, if present, or a signal by emergency personnel from a single location inside the main entrance to the building.

4. This section shall not apply to buildings permitted to be served by one exit in accordance with Item 4 or 5 of Section 1021.2.]

1. Doors serving interior stairways, other than public access stairways, under the following conditions:

1.1 Stairway discharge doors shall be openable from the egress side and shall only be locked from the opposite side.

1.2 This section shall not apply to doors arranged in accordance with Section 403.5.3.

1.3 In stairways serving not more than four stories, doors are permitted to be locked from the side opposite the egress side, provided they are openable from the egress side and capable of being unlocked simultaneously without unlatching upon a signal from the fire command center, if present, or a signal by emergency personnel from a single location inside the main entrance to the building.

1.4. In buildings five stories in height or more but not subject to Section 403, any door locked from the stair side of an interior stairway shall be equipped with an automatic fail safe system for opening in the event of the activation of any automatic fire detection system, or when any elevator recall is activated, or when any signal is received from the fire command center.

1.5 This section shall not apply to buildings permitted to be served by one exit in accordance with Item 4 or 5 of Section 1021.2.

2. Doors serving public access stairways, under the following conditions:

2.1 On levels other than the building entrance level, where access to the level from the elevator is restricted to individuals by use of security devices, such as keys, codes, or card key access, doors serving a public access stairway on such levels may be locked from the egress side provided any such door shall be openable by such individuals using the same security devices. In stairways serving not more than four stories, doors are permitted to be locked from the side opposite the egress side, provided they are openable from the egress side.

2.2 On the building entrance level, where access to all other levels from the elevator is restricted to individuals by use of security devices, such as key, codes, or card key access, access to the public access stairway on the building entrance level may be locked on the side opposite the egress side, provided any such door shall be openable by such individuals using the same security devices. Public access stairway discharge doors shall be openable from the egress side.

2.3 In buildings five stories in height or more, any door serving a public access stairway that is permitted to be locked shall be equipped with an automatic fail safe system for opening in the event of the activation of any automatic fire detection system, or when any elevator recall is activated, or when any signal is received from the fire command center. In stairways serving not more than four stories, any door serving public access stairway that is permitted to be locked must be capable of

being unlocked simultaneously without unlatching upon a signal from the fire command center, if present, or a signal by emergency personnel from a single location inside the main entrance to the building.

1008.1.9.10.1 Interior Stairways. *Interior stairways that are designated as public access stairways in prior code buildings that are subject to this section pursuant to item 18 of Section 28-101.4.3 of the Administrative Code shall comply with Section 1008.1.9.10, notwithstanding any provisions of sections 27-371(j)(b)(2), (3), or (4) of the 1968 building code that previously permitted doors to be locked from the stair side.*

§5. Section BC 1008 of the New York city building code, as amended by local law 141 for the year 2013, is amended by adding a new section 1008.1.11, to read as follows:

1008.1.11 Glazing in Doors. *All doors serving a public access stairway required by Section 1009.15 shall have fire-protection rated glazing in accordance with Section 715.3.4.1. Such glazing shall be at least 10 square feet (3050 square mm) in area for such doors at the building entrance level and at least 7 square feet (2135 square mm) in area for all other doors. Such glazing may be of any width, however, a portion shall be located between 4 feet (1,220 mm) and 6 feet (1,830 mm) above the finished floor landing.*

Exception: Glazing in doors shall not be required where Public Access Stairway Door Sidelights are provided on one or both sides of a door serving a public access stairway. The combined area of such sidelights must be equal to or greater than the square footage required for glazing in doors pursuant to Section 1008.1.11. Such sidelights may be of any width, however, a portion shall be located between 4 feet (1,220 mm) and 6 feet (1,830 mm) above the finished floor landing.

§6. Section BC 1009 of the New York city building code, as amended by local law 141 for the year 2013, is amended by adding a new Section 1009.15, to read as follows:

1009.15 Public Access Stairway. *At least one public access stairway in compliance with Sections 715.4, 1008.1.9.10, 1008.1.11, 1022.8.5, 1030.3, and 1030.13 shall be provided in buildings or structures. All levels within a building or structure shall have access to at least one public access stairway.*

Exceptions:

1. Buildings in which an elevator or escalator is not provided.

2. Buildings or portions of buildings in occupancy group E under the jurisdiction of the New York City Department of Education.

3. Public access stairway doors serving the following spaces:

3.1 Doors in places of detention or restraint that are permitted to be locked pursuant to item 1 of Section 1008.1.9.3 or to Section 27-371(j)(1)(a)(2) of the 1968 building code.

3.2 Doors in banks, jewelry stores and other places where extra safeguards are required that are permitted to be locked pursuant to item 2 of Section 1008.1.9.3 or to Section 27-371(j)(1)(a)(2) of the 1968 building code, subject to the approval of the commissioner.

3.3 Doors in museums that are permitted to be locked pursuant to item 2 of Section 1008.1.9.3 or to Section 27-371(j)(1)(a)(2) of the 1968 building code, subject to the approval of the commissioner and the Fire Commissioner.

3.4 For prior code buildings subject to this section pursuant to item 18 of Section 28-101.4.3 of the Administrative Code, doors opening directly into a dwelling unit or tenant's space without an intervening hall, vestibule or corridor.

3.5 For prior code buildings subject to this section pursuant to item 18 of Section 28-101.4.3 of the Administrative Code, doors that are permitted to be locked to prevent access to the stair at the street floor pursuant to section 27-371(j)(1)(b)(1) of the 1968 building code.

3.6 For prior code buildings subject to this section pursuant to item 18 of Section 28-101.4.3 of the Administrative Code, doors providing access to the roof that are permitted to be locked pursuant to section 27-371(j)(1)(a)(3) of the 1968 building code.

1009.15.1 Entry location. *Where the common entrance area at the building entrance level provides direct access to an elevator, direct access to a public access stairway shall also be provided within the same common entrance area.*

Exception for prior code buildings subject to this section pursuant to item 18 of Section 28-101.4.3 of the Administrative Code: Where the common entrance area at the building entrance level provides direct access to an elevator, but does not provide direct access to a stairway within such area, compliance with the provisions of Section 1009.15.1 regarding providing direct access to a public access stairway in the common entrance area shall not be required. Instead, the stairway with an opening closest to such common entrance area shall be designated the public access stairway.

1009.15.1.1 Stairways. *Stairways that are permitted to be unenclosed from the building entrance level pursuant to Section 1022.1 shall be permitted to serve as a portion of a public access stairway, provided that the top of such stairway has direct access to a public access stairway to the upper levels.*

1009.15.2 Roof top access. *In a building where access to the roof is provided by an elevator, such roof shall also be served by a public access stairway.*

Exception: Where doors are permitted to be locked pursuant to Section 1008.1.9.3, Item 6.

1009.15.3 Multiple occupancies. *Where multiple tenant spaces are not served by a common elevator, such tenant spaces shall be permitted to be served by separate public access stairways, provided that each such stair has access at the building entrance level.*

§7. Section 1020.1 of the New York city building code, as amended by Local Law 141 of 2013, is amended to read as follows:

1020.1 General. Exits shall comply with Sections 1020 through 1026 and the applicable requirements of Sections 1003 through 1013. An exit shall not be used for any purpose that interferes with its function as a means of egress. *The use of an exit for access between floors of a public access stairway in accordance with Section 1009.15 shall not be deemed to interfere with its function as a means of egress.* Once a given level of exit protection is achieved, such level of protection shall not be reduced until arrival at the exit discharge.

§8. The New York city building code, as amended by local law 141 for the year 2013, is amended by adding a new Section 1022.8.5, to read as follows:

1022.8.5 Public access stairway identification sign. *A public access stairway identification sign shall be provided on the occupied side of each door leading to a public access stairway, in accordance with the rules of the Department of Health and Mental Hygiene. Signs shall be mounted on the wall surface directly adjacent to the latch-side of the door, such that in no case shall there be more than 6 inches (152.4 mm) from the door to the edge of the sign. Where the wall surface directly adjacent to the latch side is too narrow to accommodate the sign, the sign may be placed on the adjacent perpendicular wall. The top of such sign shall be located no higher than 5 feet (1,525 mm) above the finished floor. Such signs shall comply with Section E107.3.*

§9. Section BC 1022 of the New York city building code, as amended by local law 141 for the year 2013, is amended to read as follows:

1030.3 Stairway and elevator identification signs. Stairway floor number and stairway identification signs shall be provided in accordance with Section 1022.8. Elevator identification and emergency signs shall be provided in accordance with Section 3002.3. *A public access stairway identification sign shall be provided in accordance with Section 1022.8.5. Stair prompt signs shall be provided in accordance with Section 3002.3.2. Where stair side doors provide restricted access in accordance with Section 1008.1.9.10, signs shall be posted in accordance with Section 1030.13.*

§10. Section BC 1030 of the New York city building code, as amended by local law 141 for the year 2013, is amended by adding a new section 1030.13, to read as follows:

1030.13 Public access stairway, restricted access list. *Where stair side doors provide restricted access in accordance with Section 1008.1.9.10, restricted access list signs shall be posted and maintained on the stair side at all public access stair doors at every floor. Such signs shall read: "DOORS TO THE FOLLOWING FLOORS ARE OPENABLE USING SECURITY DEVICES:…ALL OTHER DOORS ARE FULLY OPENABLE". Such signs shall comply with Section E107.3. In buildings where free access is provided on every floor, no such sign is required.*

§11. Section BC 3002 of the New York city building code, as amended by local law 141 for the year 2013, is amended by adding a new section 3002.3.2, to read as follows:

3002.3.2 Public Access Stairway Prompt. *A public access stairway prompt sign shall be posted and maintained on each wall where an elevator call button is located, in accordance with the rules of the Department of Health and Mental Hygiene. The contents of the sign shall comply with the rules of the Department of Health and Mental Hygiene. Signs shall be mounted on the wall surface directly adjacent to the elevator call station. Where there are two or more elevators, signs shall be centrally mounted on the wall between such elevators. The top of such sign shall be located no higher than 5 feet (1,525 mm) above the finished floor. Such signs shall comply with Section E107.3.*

§12. This local law shall take effect on January 1, 2015 except that the commissioner of buildings shall take such measures as are necessary for its implementation, including the promulgation of rules, prior to such effective date.

Referred to the Committee on Housing and Buildings.

Int. No. 203

By Council Member Koo.

A Local Law to amend the administrative code of the city of New York, the New York city building code and the New York city fire code, in relation to hold-open devices and automatic closing of exit doors serving vertical exit enclosures.

Be it enacted by the Council as follows:

Section 1. Section 707.7 of the New York city building code, as added by local law 33 for the year 2007, is amended to read as follows:

707.7 Openings. Openings in a shaft enclosure shall be protected in accordance with Section 715 as required for fire barriers. Such openings shall be self-closing or automatic-closing by smoke detection. Automatic-closing by smoke detection is not permitted for required [vertical exit] doors *serving vertical exit enclosures*.

Exceptions: *For buildings other than those in Occupancy Group H, doors serving vertical exit enclosures shall be permitted to be automatic-closing by smoke detection in the following buildings, provided the automatic closing of such openings complies with Section 707.7.2:*

1. Buildings that are not classified as high-rise pursuant to Section 403.1 of this code or Section 27-232 of the Administrative Code and that are equipped with a fire alarm system; or

2. Buildings, regardless of height, that are equipped with fire alarm systems and automatic sprinkler systems throughout; or

3. High-rise office buildings 100 feet or more in height that are equipped with fire alarm systems, and are subdivided into compartments pursuant to Section 27-339(c) of the Administrative Code.

707.7.1 Prohibited openings. Openings other than those necessary for the purpose of the shaft shall not be permitted in shaft enclosures.

707.7.1.1 Existing buildings. *Nothing in Section 28-101.4.4 shall preclude the use of automatic-closing by smoke detection for exit doors serving vertical exit enclosures in existing buildings, provided such automatic closing complies with Section 707.7.*

707.7.2 Automatic closing of doors by smoke detection. *Doors serving vertical exit enclosures permitted to be automatic-closing by smoke detection shall be subject to the following conditions:*

1. No more than one vertical exit enclosure in a building shall be permitted to be served by doors that are automatic-closing by smoke detection.

2. Such doors shall be permitted to serve not more than three levels within such vertical exit enclosure, which must be consecutive levels.

3. All levels served by such doors shall be served by at least one other exit.

4. Such doors shall be connected to a fire alarm system and installed in accordance with Section 715.3.7.3 and NFPA 80.

5. The hold-open devices of such doors shall be capable of manual release either (i) at a fire alarm control panel that is near the main building entrance, or (ii) at the fire command center when a fire command center is required.

6. The hold-open devices of such doors shall be capable of manual release by pulling the doors to the closed position.

§2. Section 715.3.7.3 of the New York city building code, as added by local law 33 for the year 2007, is amended by adding a new item 7 to read as follows:

7. Doors serving vertical exit enclosures that are permitted to be automatic-closing by smoke detection pursuant to the exception set forth in Section 707.7.

§3. Section 907.3 of the New York city building code, as added by local law 141 for the year 2013, is amended by adding a new section 907.3.1 to read as follows:

907.3.1 Monitoring of hold-open devices and closers. *All hold-open devices used in automatic-closing doors pursuant to Section 707 shall be electrically supervised to monitor the integrity of the wiring connections among the fire alarm system, the smoke detection system, and the hold-open devices.*

§4. Section 911.1.5 of the New York city building code, as added by local law 141 for the year 2013, is amended by adding a new item 8 to read as follows:

8. Manual controls for the release of doors that are automatic-closing by the actuation of smoke detectors or activation of the fire alarm in accordance with Section 707.7.2.

§5. Section 1022.1 of the New York city building code, as renumbered and amended by local law 141 for the year 2013, is amended by adding a new Exception 8 to read as follows:

8. Vertical exit enclosures with doors that are automatic-closing by smoke detection pursuant to the exception set forth in Section 707.7 may be used for travel between floors and this use shall not be deemed to interfere with function as a means of egress.

§6. Section 1022.8 of the New York city building code, as renumbered and amended by local law 141 for the year 2013, is amended by adding a new section 1022.8.5 to read as follows:

1022.8.5 Directions to openable doors. *Where doors serving vertical exit enclosures are locked on the stair side, signage shall be posted in compliance with Sections 1030.4.1, 1030.4.2 and 1030.4.3.*

§7. Section 703.2.2 of the New York city fire code, as added by local law 26 for the year 2008, is amended to read as follows:

703.2.2 Hold-open devices and *automatic door* closers. Hold-open devices *for fire doors* and automatic door closers *for self-closing fire doors*, where provided, shall be *inspected, tested, and otherwise* maintained *in accordance with Sections 703.2 and 907.20*. During the period that such *hold-open* device is out of service for repairs, the door it operates shall remain in the closed position.

§8. Section 907.20 of the New York city fire code, as amended by local law 148 for the year 2013, is amended by adding a new subdivision 907.20.7 to read as follows:

907.20.7 Hold-open devices. *The fire alarm system connections for hold-open devices installed on fire doors pursuant to the Building Code, including hold-open devices provided for vertical exit enclosure doors pursuant to the exception to Section 707.7 of the Building Code, shall be inspected, tested and otherwise maintained in accordance with Sections 703.2 and 907.20 and NFPA 72. Hold-open devices and automatic door closers provided for such vertical exit enclosure doors shall be inspected and tested annually to ensure the proper functioning of:*

1. the manual control on the fire alarm system control panel, or the fire command center where a fire command center is required, that transmits a signal to release the hold-open devices;

2. the fire alarm system output programming, which automatically transmits a signal to release the hold-open devices upon activation of an automatic alarm initiating device or manual elevator recall;

3. the circuitry for each hold-open device, which upon receipt of a manual or automatic signal, releases the door; and

4. each automatic door closer, which, upon release of the door by the hold-open device, mechanically moves the door to its fully closed position.

§ 9. This local law shall take effect immediately.

Referred to the Committee on Housing and Buildings.

Res. No. 137

Resolution calling upon the State Legislature to pass, and the Governor to sign, legislation prohibiting buses from using streets adjacent to houses of worship or schools for the purposes of layovers, staging, or idling.

By Council Members Koo, Gentile, Levine and Wills.

Whereas, There are thousands of schools and houses of worship in New York City; and

Whereas, The City is served by over 4,500 local buses operated by the Metropolitan Transportation Authority (MTA), in addition to many express buses and private buses; and

Whereas, In certain communities, buses utilize curbside space near schools or places of worship for layovers and staging; and

Whereas, For example, St. George's Church in Flushing, Queens is surrounded on two sides by bus stops and by a designated bus layover area on the remaining adjacent street; and

Whereas, Buses using the layover space have raised many concerns among community members, including pollution and noise related to engine idling, as well as problems associated with bus driver loitering; and

Whereas, Schools and houses of worship serve inherently vulnerable populations such as children and the elderly; now, therefore, be it

Resolved, That the Council of the City of New York calls upon the State Legislature to pass, and the Governor to sign, legislation prohibiting buses from using streets adjacent to houses of worship or schools for the purposes of layovers, staging, or idling.

Referred to the Committee on Transportation.

Int. No. 204

By Council Members Koslowitz, Constantinides, Wills, Richards, Ferreras, Gentile, Johnson, King and Ulrich.

A Local Law to amend the administrative code of the city of New York, in relation to increasing fines for the depositing of residential or commercial refuse into public litter baskets.

Be it enacted by the Council as follows:

Section 1. Subdivision f of section 16-120 of the administrative code of the city of New York is amended to read as follows:

f. Any person violating the provisions of this section, except subdivision e, shall be liable for a civil penalty of not less than twenty-five nor more than one hundred dollars for the first violation, not less than one hundred dollars nor more than two hundred dollars for a second violation within any twelve-month period, and not less than two hundred dollars nor more than three hundred dollars for a third or subsequent violation with any twelve-month period. Any person violating the provisions of subdivision e of this section shall be liable for a civil penalty of [not less than one hundred dollars nor more than three hundred] *two hundred* dollars for the first violation, [not less than two hundred fifty dollars nor more than three hundred fifty] *five hundred* dollars for a second violation within any twelve-month period, and [not less than three hundred fifty dollars nor more than four hundred] *six hundred* dollars for a third or subsequent violation within any twelve month period. *A third or subsequent violation shall be a class a misdemeanor.*

§2. This local law shall take effect ninety days after its enactment.

Referred to the Committee on Sanitation and Solid Waste Management.

Int. No. 205

By Council Members Lancman, Barron, Constantinides, Johnson, Levine, Mendez and Wills (by request of the Manhattan Borough President).

A Local Law to amend the administrative code of the city of New York, in relation to requiring that all hotels in the city of New York provide their housekeeping staff with silent alarms for their protection.

Be it enacted by the Council as follows:

Section 1. Section 10-101 of the administrative code of the city of New York is amended by lettering the existing paragraph as subdivision a and by adding a new subdivision b to read as follows:

a. The owners and proprietors of all manufactories, hotels, tenement houses, apartment houses, office buildings, boarding and lodging-houses, warehouses, stores and offices, theatres and music halls, and the authorities or persons having charge of all hospitals and asylums, and of the public schools and other public buildings, churches and other places where large numbers of persons are congregated for purposes of worship, instruction or amusement, and all piers, bulkheads, wharves, pier sheds, bulkhead sheds or other waterfront structures, shall provide such means of communicating alarms of accident or danger to the police department, as the police commissioner may prescribe.

b. 1. The owners and proprietors of all hotels shall provide their housekeeping staff with silent alarms for their personal protection as the police commissioner may prescribe.

2. The department of consumer affairs shall enforce the provisions of this subdivision, receive complaints regarding non-compliance with this chapter and investigate any such complaints received by the department of consumer affairs in a timely manner.

i. Any person alleging a violation of this chapter shall have the right to file a complaint with the department of consumer affairs within one hundred eighty days of the date such person knew or should have known of the alleged violation.

ii. Any person claiming to be aggrieved by an act that violates this section may make, sign and file with the department of consumer affairs a verified complaint in writing and proceed with such complaint. Upon receiving a complaint alleging a violation of this section, the department of consumer affairs shall investigate such complaint. The department of consumer affairs shall keep complainants reasonably notified regarding the status of their complaint and any resultant investigation. If the department of consumer affairs believes that a violation has occurred, it shall issue a notice of violation to the employer that is the subject of the complaint. The commissioner of consumer affairs shall prescribe the form and wording of such notices of violation. The notice of violation shall be returnable to the administrative tribunal authorized to adjudicate violations of this chapter.

iii. The department of consumer affairs may also itself make, sign and file a verified complaint alleging that an employer has violated this section and proceed with such complaint pursuant to the provisions of subparagraph ii of this section.

iv. Any owner or proprietor who violates this subdivision shall be subject to a fine of not more than fifty dollars for each instance a silent alarm was not provided to a housekeeper pursuant to subdivision b of this section up to a maximum of one thousand dollars per building.

§ 2. This local law shall take effect ninety days after it shall have been enacted into law.

Referred to the Committee on Public Safety.

Int. No. 206

By Council Member Lancman.

A Local Law to amend the administrative code of the city of New York, in relation to enacting the Diplomatic Immunity Notification Act.

Be it enacted by the Council as follows:

Section 1. Title 14 of the administrative code of the city of New York is amended by adding a new section 14-155 to read as follows:

§14-155. Diplomatic immunity notification. a. For the purposes of this section, the term "diplomatic immunity" shall mean the immunity granted to individuals under the Vienna Convention on Diplomatic Relations, the Vienna Convention on Consular Relations, section 254b or 254c of title 22 of the United States code, or under any other laws extending diplomatic privileges.

b. The department shall notify the United States Department of State and the Speaker of the City Council of any incident in which a person entitled to diplomatic immunity has been arrested for a crime or would have been arrested for a crime but for his or her diplomatic immunity within five calendar days of such incident. Such notification shall include the name of the person entitled to diplomatic immunity; the person's title, position and/or assignment in the United States; and the date, time, location and nature of the incident, including the penal law provision(s) such individual is alleged to have violated.

c. Beginning on January 31, 2015, and on every January 31 thereafter, the department shall issue a report to the Mayor, the Speaker of City Council, and the United States Department of State on the total number of incidents reported pursuant to subsection b of this section during the previous calendar year.

§2. This local law shall take effect 60 days after its enactment into law.

Referred to the Committee on Public Safety.

Int. No. 207

By Council Members Lancman and Mendez.

A Local Law to amend the administrative code of the city of New York, in relation to enacting the Child Protection Notification Act.

Be it enacted by the Council as follows:

Section 1. Title 14 of the administrative code of the city of New York is amended by adding a new section 14-155 to read as follows:

§14-155. Arrest of individuals with minor children. a. For the purposes of this section, the term "primary caregiver" shall mean the person who is primarily responsible for providing care to a child under the age of eighteen.

b. Upon making an arrest, the department shall ascertain whether the individual being arrested is the primary caregiver to a child under the age of eighteen. In the event that the department determines such individual is the primary caregiver to a child under the age of eighteen, the department shall notify the administration for children's services of such an arrest, unless the department determines that doing so would jeopardize an ongoing investigation.

§2. This local law shall take effect 60 days after its enactment into law.

Referred to the Committee on Public Safety.

Int. No. 208

By Council Members Lancman, Barron, Mendez and Wills.

A Local Law to amend the administrative code of the city of New York in relation to the creation of a safe patient handling advisory board.

Be it enacted by the Council as follows:

Section 1. Legislative findings and intent. The Council finds that it is in the public interest to develop Safe Patient Handling policy recommendations for health care facilities operating in New York City. There are many benefits that can be derived from the development and implementation of Safe Patient Handling policies. Patients benefit through improved quality of care and quality of life by reducing the risk of falls, being dropped, friction burns, skin tears and bruises. Caregivers benefit

from the reduced risk of career ending and debilitating injuries. If best practices in Safe Patient Handling are identified and if such practices were implemented, there would be improved health and safety across the City.

§2. Safe Patient Handling Advisory Board. a. For purposes of this subdivision, the following terms shall have the following meanings:

1. "Health care facility" shall mean any individual, partnership, association, corporation, limited liability company or any person or group of persons acting directly or indirectly on behalf of or in the interest of the employer, who provides health care services in a facility licensed or operated pursuant to articles twenty-eight, twenty-eight-a and thirty-six of the New York state public health law, the New York state mental hygiene law, the New York state education law and the New York state correction law, including any facility operated by New York state, a political subdivision or a public benefit corporation as defined by section sixty-six of the New York state general construction law, or any successor provision thereto.

2. "Nurse" shall have the same meaning as set forth in article one hundred thirty-nine of the New York state education law.

3. "Direct care worker" shall mean any employee of a health care facility that is responsible for patient handling or patient assessment as a regular or incident part of their employment, including any licensed or unlicensed health care worker.

4. "Safe patient handling" shall mean the use of engineering controls and lifting and transfer aids or assistive devices, by direct care workers, which may be used as a substitute for manual lifting to perform the acts of lifting, transferring or repositioning health care patients and residents. 5. "Safe patient handling policy recommendations" shall include a written statement explaining the purpose and health benefits of a safe patient handling policy, and a set of recommendations for procedures, methods and equipment that the department recommends that health care facilities operating in New York city adopt for the purpose of decreasing patient and employee injuries when handling patients.

b. Safe patient handling advisory board. There shall be an advisory board to study injuries to and problems facing patients and health care facility employees due to the unsafe handling of patients and recommended safe patient handling procedures.

c. Such advisory board shall consist of nine members as follows:

1. The commissioner, or his or her designee;

2. Four members to be appointed by the mayor, provided that one such member shall be a representative from an employee organization representing nurses, one such member shall be a representative from an employee organization representing direct care workers other than nurses, and two such members shall have expertise in fields of discipline related to health care or occupational safety.

3. Four members to be appointed by the speaker of the council, provided that one such member shall be a representative from an employee organization representing nurses, one such member shall be a representative from an employee organization representing direct care workers other than nurses, and two such members shall have expertise in fields of discipline related to health care or occupational safety.

d. The members shall be appointed within sixty days of the enactment of this local law.

e. At its first meeting, the advisory board shall select a chairperson from among its members by majority vote of the advisory board.

f. Each member shall serve for a term of twelve months, to commence after the final member of the advisory board is appointed. Any vacancies in the membership of the advisory board shall be filled in the same manner as the original appointment. A person filling such vacancy shall serve for the unexpired portion of the term of the succeeded member.

g. The department may provide staff to assist the advisory board.

h. No member of the advisory board shall be removed from office except for cause and upon notice and hearing by the appropriate appointing official.

i. Members of the advisory board shall serve without compensation and shall meet no less than once a month.

j. No later than twelve months from the date all nine members of advisory board are appointed, the advisory board shall submit to the mayor and the council a report that shall include the findings and recommendations of the advisory board. The department shall make such safe patient handling policy recommendations available to the public through the department's website. Such report shall include recommendations for standards to be adopted by health care facilities with regard to:

1. the equipment, devices or technology to be used by a nurse or direct care worker who is engaged in patient handling;

2. the ratio of such equipment or technology based upon the type of facility, the number of beds in a facility, the number of patient-handling tasks, types of care units, patient populations, and patient care areas; and

3. the minimum number of devices to ensure that current assessed hazards are eliminated or mitigated;

k. The advisory board shall dissolve upon submission of the report required by subdivision j of this section.

§3. This local law shall take effect immediately after its enactment into law.

Referred to the Committee on Health.

Int. No. 209

By Council Members Lander, Chin, the Public Advocate (Ms. James), Richards, Koo, Levin, Palma, Crowley, Dromm, Levine, Johnson, Van Bramer, Cohen, Constantinides, Rosenthal, Vallone, Menchaca, Kallos, Rodriguez, Cumbo, Miller and Torres.

A Local Law to amend the administrative code of the city of New York, in relation to reducing the use of carryout bags.

Be it enacted by the Council as follows:

Section 1. Title 16 of the administrative code of the city of New York is amended by adding a new chapter 4-F to read as follows:

CHAPTER 4-F: CARRYOUT BAG REDUCTION

16-490 Definitions
16-491 Carryout bag fee
16-492 Additional obligations for covered stores
16-493 Exemptions
16-494 Reporting
16-495 Outreach and education
16-496 Enforcement
16-497 Authority to promulgate rules

§ 16-490 Definitions. When used in this chapter the following terms shall have the following meanings:

"Carryout bag" means a single-use or reusable bag that is provided by a covered store to a customer at the point of sale and is used to carry goods from such store. Such term shall not include reusable carryout bags distributed under section 16-495 of this chapter or exempt bags.

"Covered store" means a general vendor, green cart or a retail or wholesale establishment engaged in the sale of personal, consumer or household items including but not limited to drug stores, pharmacies, grocery stores, supermarkets, convenience food stores, or foodmarts that provide carryout bags to consumers in which to place items purchased or obtained at such establishment. Such term shall not include food service establishments including mobile food vendors that are not green carts, retail stores licensed pursuant to chapter 3-B of the state alcohol beverage control law for the sale of liquor for off-premises consumption, emergency food providers, or as set forth in section 16-493 of this chapter.

"Exempt bag" means any of the following: (i) a bag without handles used to carry produce, meats, dry goods or other non-prepackaged food items to the point of sale within a store or market or to prevent such food items from coming into direct contact with other purchased items; (ii) a bag provided by a pharmacy to carry prescription drugs; or (iii) any other bag to be exempted from the provisions of this chapter as determined by rule of the commissioner.

"Food service establishment" has the same meaning as such term is defined in section 81.03 of the health code of the city of New York or any successor provision.

"General vendor" has the same meaning as such term is defined in subdivision b of section 20-452 of this code.

"Green cart" means a green cart as such term is defined in subdivision s of section 17-306 of this code or any other non-processing mobile food vending unit in or on which non-potentially hazardous uncut fruits and vegetables are sold or held for sale or service, regardless of geographic restrictions on operation of such green cart or mobile food vending unit.

"Reusable carryout bag" means a bag with handles that is specifically designed and manufactured for multiple reuse and is either (i) made of cloth or other machine washable fabric, (ii) made of durable plastic that is at least 2.25 mils thick, or (iii) defined as a reusable bag by rule of the commissioner.

§ 16-491 Carryout bag fee. a. Covered stores shall charge a fee of not less than ten cents for each carryout bag provided to any person. No covered store shall be required to charge such fee for an exempt bag. All monies collected by a covered store under this chapter shall be retained by the store.

b. No covered store shall charge a carryout bag fee for bags of any kind provided by the customer in lieu of a carryout bag provided by any such covered store.

c. No covered store shall prevent a person from using a bag of any kind that they have brought to any such covered store for purposes of carrying goods from such store.

§ 16-492 Additional obligations for covered stores. a. All covered stores shall post signs provided or approved by the department at or near points of sale located in such covered stores to notify customers of the provisions of this chapter.

b. No covered store shall provide a credit to any person specifically for the purpose of offsetting or avoiding the carryout bag fee required by subdivision a of section 16-491 of this chapter.

c. Paper carryout bags at covered stores shall contain a minimum of forty percent post-consumer recycled content.

d. Plastic carryout bags labeled as "compostable" must be certified as compliant with the American society for testing and materials 6400 standard specification for compostable plastics or other standard determined by rule of the commissioner. Plastic carryout bags shall not be labeled as "biodegradable," "degradable," or "decomposable."

§ 16-493 Exemptions. All covered stores that provide carryout bags to customers shall provide carryout bags free of charge for items purchased at such covered store by any person using the New York state supplemental nutritional assistance program or New York state special supplemental nutrition program for women, infants and children as full or partial payment.

§ 16-494 Reporting. No later than March first, two thousand fifteen and annually thereafter, the commissioner, in collaboration with the commissioners of environmental protection and consumer affairs and the mayor's office of long term planning and sustainability, shall report to the mayor and the council on the progress of carryout bag reduction including, but not limited to, the following: (i) the amount of plastic carryout bags in the residential waste and recycling streams; (ii) the amount of plastic or paper carryout bags identified as litter on streets, sidewalks and in parks; (iii) the amount of plastic or paper carryout bags found in city storm drains; (iv) the number of warning notices or notices of violation issued pursuant to this chapter, broken down by community district; (v) any cost savings for the city attributable to carryout bag reduction such as reduced contamination of the residential recycling stream or reduction in flooding or combined sewer overflows; (vi) gross revenue generated by covered stores from the sale of carryout bags, including the percent of such gross revenue attributable to paper, plastic or reusable carryout bags, respectively; and (vii) comparisons for such measures to their respective amounts at the effective date of this chapter.

§ 16-495 Outreach and education. a. The commissioner shall establish an outreach and education program aimed at educating residents and covered stores on reducing the use of single-use carryout bags and increasing the use of reusable carryout bags.

b. To the extent practicable, the commissioner shall seek the assistance of private entities and local not-for-profit organizations to provide and distribute reusable carryout bags to residents and signs compliant with subdivision a of section 16-492 to covered stores.

c. In conducting outreach and distributing reusable carryout bags to residents pursuant to this section, the commissioner shall prioritize such outreach and reusable bag distribution to residents in households with annual income below two hundred percent of the federal poverty line and covered stores and residents within the police precincts identified in subparagraph b of paragraph four of subdivision b of section 17-307 of this code.

d. No later than two months after the effective date of the local law that added this chapter, the commissioner shall distribute a multilingual letter to all covered stores informing them of their obligations to comply with the provisions of this chapter and any rules promulgated pursuant thereto. Failure to receive a letter pursuant to this subdivision shall not eliminate the obligations of a covered store pursuant to this chapter and any rules promulgated pursuant thereto.

§ 16-496 Enforcement. a. Any notice of violation issued pursuant to this chapter shall be returnable to the environmental control board, which shall have the power to impose civil penalties as provided herein.

b. The department and the department of consumer affairs shall have the authority to enforce the provisions of this chapter.

c. Beginning on the first Tuesday three months after the effective date of the local law that added this chapter, any covered store that violates section 16-491 or subdivisions b, c, or d of section 16-492 of this chapter or any rules promulgated pursuant thereto shall receive a warning notice for the first such violation.

d. Beginning nine months after the effective date of the local law that added this chapter any store that violates section 16-491 or subdivisions b, c, or d of section 16-492 of this chapter or any rules promulgated pursuant thereto subsequent to receiving a warning notice for a first violation pursuant to subdivision c of this section shall be liable for a civil penalty of two hundred fifty dollars for the first violation after receiving a warning and five hundred dollars for any subsequent violation of the same section or subdivision of this chapter or rule promulgated pursuant thereto in the same calendar year. For purposes of this chapter, each commercial transaction shall constitute no more than one violation.

e. It shall not be a violation of this chapter for a general vendor or green cart to fail to provide a receipt to a customer with an itemized charge for a carryout bag fee.

f. No covered store that fails to post signs in compliance with subdivision a of section 16-492 of this chapter shall be liable for a civil penalty.

§16-497 Authority to promulgate rules. The commissioner shall have the authority to promulgate rules as necessary and appropriate for the implementation of this chapter.

§2. This local law shall take effect three months after its enactment except that the commissioner shall take such measures as are necessary for its implementation including the promulgation of rules prior to such effective date.

Referred to the Committee on Sanitation and Solid Waste Management.

Int. No. 210

By Council Member Lander, Levin, Van Bramer, Chin, Cumbo, Constantinides, Johnson, Levine and Mendez.

A Local Law to amend the administrative code of the city of New York, in relation to requiring the compilation of Citi Bike usage data.

Be it enacted by the Council as follows:

Section 1. Subchapter 3 of chapter one of title 19 of the administrative code of the city of New York is amended by adding a new section 19-190 to read as follows:

§ 19-190 Citi bike usage data. a. Definitions. For the purposes of this section "citi bike" shall mean New York city's bike share program.

b. The department shall compile data on each citi bike trip including the duration, the start date and time, the end date and time, the start station, the end station, the bike number, and the membership type, but shall not include personally-identifiable information.

c. Beginning on January 1, 2015, and quarterly thereafter, the department shall post the citi bike usage data required by subdivision b of this section on its website in a commonly available non-proprietary format or spreadsheet format that is suitable for analysis. The department shall also simultaneously provide the council with a report on such citi bike usage data disaggregated by month, quarter, and year as such data is available and disaggregated by council district and community district as applicable.

§2.This local law shall take effect ninety days after its enactment into law.

Referred to the Committee on Transportation.

Int. No. 211

By Council Members Lander, Chin, Johnson, Levine, Mendez and Wills

A Local Law to amend the administrative code of the city of New York, in relation to a bus rapid transit plan.

Be it enacted by the Council as follows:

Section 1. Title 19 of the administrative code of the city of New York is amended to add a new chapter 8 to read as follows:

CHAPTER 8 - BUS RAPID TRANSIT

§ 19-801 Bus rapid transit plan. Not more than two years after the effective date of this section, the department shall consult with the metropolitan transit authority and with input from the public, submit to the council, the borough presidents and the community boards and post on the department's website a plan to create a citywide network of bus rapid transit lines connecting the boroughs of the city of New York. Such plan shall include, but not be limited to: (1)

identifying areas of the city in need of additional rapid transit options, (2) identifying priority corridors for additional intra-borough and inter-borough bus rapid transit lines serving those areas that the department intends to establish in the ten years following the release of such plan, (3) developing strategies for integration with current and future rapid transit and ferry lines in the region and (4) assessing the anticipated capital and operating costs of such additional bus rapid transit lines.

§ 2. This local law shall take effect immediately.

Referred to the Committee on Transportation.

Int. No. 212

By Council Members Lander, Koo, Chin, Gentile, Levine and Mendez.

A Local Law to amend the administrative code of the city of New York, in relation to serious collision victims' access to information and collision victims' resources.

Be it enacted by the Council as follows:

Section 1. Title 14 of the administrative code of the city of New York is amended by adding a new section 14-155 to read as follows:

§14-155. Collision Victim Access to Information.

a. Definitions. For the purposes of this section the following terms shall have the following meanings:

1. "Family representative" shall mean, upon written proof, the duly authorized executor of the serious collision victim's estate or any attorney retained by such victim or his or her next of kin;

2. "Next of kin" shall mean the closest living relative of the victim of a serious collision that has died or is rendered unconscious as a result of the injuries sustained in such serious collision. For the purposes of this section, the next of kin order of precedence shall be as follows: (i) spouse; (ii) issue; (iii) parent(s); (iv) other legal guardian(s); and (v) sibling(s);

3. "Serious collision" shall mean a motor vehicle collision involving one or more motor vehicles where the collision results in a serious physical injury as defined by article ten of the New York State Penal Law; and

4. "Victim" shall mean any person, including a motor vehicle operator, a motor vehicle passenger, a bicyclist, or a pedestrian, who as a result of a serious collision suffers a serious physical injury as defined by article ten of the New York State Penal Law.

b. Online access to serious collision information.

1. Within six months of the enactment of the law creating this section, the department shall create and maintain a secure website where the victim of a serious collision, the next of kin of such victim, attorney or other agent of such victim will be able to access certain information about such serious collision pursuant to rules set forth by the commissioner of the department. Such website shall include information such as: (i) date of the serious collision; (ii) location of the serious collision; (iii)

investigation status; (iv) whether or not any summonses have been issued or arrests affected; and (iv) whether or not any witnesses have been identified and interviewed.

2. The department shall make the serious collision information available via the website created and maintained pursuant to this section within a reasonable timeframe after the occurrence of such serious collision(s) and shall update the serious collision information within a reasonable timeframe after such new or updated information becomes available to the department; except that the department may withhold the disclosure of any information which would: (i) interfere with the investigation or prosecution of a crime involved in or connected with the collision; or (ii) be exempt from disclosure pursuant to section eighty-seven of the New York State Public Officer's Law;

3. The commissioner of the department shall make and promulgate such rules and regulations as he or she deems necessary for the proper implementation of this section. The rules promulgated by the commissioner shall include, but not be limited to:

(i) the process by which a victim, next of kin of such victim, or other family representatives of such victim, shall request access to the website created pursuant to this section;

(ii) the documentation necessary to prove that the person requesting website access is in fact a serious collision victim, the next of kin of such victim, or an attorney or agent of such victim; and

(iii) the manner in which the department will provide a serious collision victim, next of kin of such victim, or an attorney or agent of such victim with online access to the serious collision information website created pursuant to this section.

§2. Title 14 of the administrative code of the city of New York is amended by adding a new section 14-156 to read as follows:

§14-156. Collision Victim Resources.

a. Definitions. For the purposes of this section the following terms shall have the following meanings:

1. "Collision" shall mean any incident where (i) one or more motor vehicles comes in physical contact with another motor vehicle, a pedestrian, or a bicyclist; or (ii) one or more motor vehicles is operated in a manner that causes a pedestrian or bicyclist to sustain a physical injury or injuries, as defined by article ten of the New York State Penal Law, without coming into physical contact with such pedestrian or bicyclist;

2. "Victim" shall mean any a person, including a motor vehicle operator, a motor vehicle passenger, a bicyclist, or a pedestrian, who suffers physical injury, as defined by article ten of the New York State Penal Law, as a result of a collision, as defined by this section.

b. Collision Victim Resources.

1. Every victim of a collision shall be provided with a copy of the collision victim resources at the scene of such collision by the responding officer of the department in a form and manner to be determined by the commissioner of the department.

2. The collision victim resources shall be posted in every police precinct house, in a publicly visible location, and in a form and manner to be determined by the commissioner of the department.

3. The department shall conspicuously post the collision victim resources on the department's website.

4. The collision victim resources shall state the following information:

(i) All victims of a collision who are injured or suffered property damage are entitled to have an official police report, known as an MV-104AN, completed by an officer responding to the scene of the collision, whether or not there was contact between the victim and the vehicle that caused the victim's injuries;

(ii) All victims can request that a responding police officer complete an MV-104AN at the scene of the collision and thereafter provide such victim with the report number;

(iii) All victims of a collision are entitled to receive a copy of an MV-104AN from the precinct in which the collision occurred, within a reasonable timeframe thereafter, for a non-refundable fee of ten dollars, payable by check or money order to the "City of New York, Police Department";

(iv) All victims of a collision are entitled to obtain the insurance information of all motor vehicles involved in such collision and this information is included in the official police report;

(v) All collision victims are entitled to no-fault insurance benefits from either the insurance carrier covering the vehicle in which such victim was passenger or operator, or the insurance carrier of another vehicle involved in the collision, even if the victim is a pedestrian or bicyclist without his or her own automobile insurance;

(vi) In the event that an officer was not called, or did not respond, to the scene of a collision, all victims of a collision should report the collision to the police within twenty-four hours of its occurrence or risk losing access to no-fault insurance benefits;

(vii) No-fault insurance benefits are available to victims of a collision regardless of whether or not the parties to a collision file a lawsuit. No-fault benefits cover, with no deductibles or co-payments, medical bills, ambulance transportation, a portion of lost wages, and any out-of-pocket expenses, if applicable and supported by medical documentation;

(viii) In order to be eligible for no-fault insurance benefits, a victim of a collision must complete, sign, and deliver a no-fault application to the no-fault insurance carrier within thirty days of the collision;

(ix) All victims of a collision are also entitled to file a lawsuit for pain and suffering, disability, and any economic loss not covered by no-fault insurance if a serious injury, as defined by New York State Insurance Law Section 5102(d), has been sustained;

c. Authority to promulgate rules. The commissioner shall have the authority to promulgate rules as he or she deems necessary and appropriate for the implementation of this section.

§3. This local law shall take effect sixty days after its enactment into law.

Referred to the Committee on Public Safety.

Int. No. 213

By Council Members Lander and Johnson.

A Local Law to amend the administrative code of the city of New York, in relation to the issuance of temporary parking spaces for persons who are changing residences.

Be it enacted by the Council as follows:

Section 1. Section 19-162 of the administrative code of the city of New York is amended by adding a new paragraph 3 to read as follows:

3. Notwithstanding any local law or regulation to the contrary, it shall be permissible for persons who are changing residences to obtain a temporary parking permit for a loading space as close as is practicable to such residences within the city of New York, provided such parking does not violate any provision of the vehicle and traffic law. An application for a permit issued pursuant to this paragraph, and such supporting documentation as may be required by the commissioner, shall be submitted by such person or on behalf of such person if accompanied by a notarized statement of such person requesting such permit.

§ 2. This local law shall take effect thirty days after its enactment into law.

Referred to the Committee on Transportation.

Int. No. 214

By Council Members Levine, Gibson, Barron, Chin, Dickens, Eugene, Ferreras, Johnson, Lander, Mendez, Wills, Treyger, Rodriguez, Kallos, Koslowitz, King and Rosenthal.

A Local Law to amend the administrative code of the city of New York, in relation to providing legal counsel for low-income tenants who are subject to eviction, ejectment or foreclosure proceedings.

Be it enacted by the Council as follows:

Section 1. Title 27 of the administrative code of the city of New York is amended by adding a new chapter 4 to read as follows:

Chapter 4

Provision of Legal Services in Eviction, Ejectment and Foreclosure Proceedings.

§ 27-4001 Definitions.

§ 27-4002 Civil justice coordinator.

§ 27-4003 Designation of eligible organizations.

§ 27-4004 Method of assigning legal counsel.

§ 27-4005 Compensation.

§ 27-4001 Definitions. For purposes of this chapter the following terms shall have the following meanings:

"Covered proceeding" means any action or special proceeding to evict an eligible individual, including those seeking possession for the non-payment of rent or holdover, or proceedings for ejectment or foreclosure.

"Eligible individual" means an occupant of a rental dwelling unit, an owner of shares of a cooperative corporation who occupies the dwelling unit to which such shares are allocated, the owner and occupant of a dwelling unit owned as a condominium or the owner and occupant of a one- or two-family dwelling where such dwelling unit or dwelling is located in the city of New York who is a defendant or respondent in a covered proceeding and whose gross individual income is not in excess of one hundred twenty-five percent of the federal income official poverty line.

"Designated organization" means an organization or association that is identified and designated by the civil justice coordinator pursuant to section 27-4003 of this chapter.

"Legal counsel" means a lawyer or lawyers licensed to practice law in New York state.

§ 27-4002 Civil justice coordinator. The commissioner of housing preservation and development shall appoint a civil justice coordinator who shall be responsible for establishing and implementing a program for the provision of legal services for eligible individuals with respect to covered proceedings.

§ 27-4003 Designation of organizations. a. The civil justice coordinator shall

i. identify one or more organizations eligible to provide legal counsel in accordance with the provisions of this chapter, and/or

ii. develop a plan in conjunction with the New York city bar association whereby the services of private counsel are rotated and coordinated by an administrator, and such administrator may be compensated for such service.

b. The commissioner of housing preservation and development shall by rule establish procedures for the monitoring by the civil justice coordinator of the services provided pursuant to this chapter to ensure that designated organizations are providing competent legal services.

c. The civil justice coordinator shall annually review the performance of designated organizations and may decline to renew the designation of any such organization.

§ 27-4004 Method of assigning legal counsel. a. The civil justice coordinator shall cause a designated organization to be expeditiously assigned to represent an eligible individual upon receipt of a request for such services from:

i. the eligible individual;

ii. a judge to whom a covered proceeding has been assigned or an administrative judge; or

iii. a designated organization.

b. The civil justice coordinator shall require each designated organization to identify the geographic areas from which the organization will represent eligible individuals, and for each geographic area to maintain a list of such organizations that will represent such individual.

§ 27-4005 Compensation. a. The civil justice coordinator shall provide each designated organization assigned pursuant to this chapter with fair compensation which will allow each organization to provide an organizational structure with appropriate supervision, caseloads and oversight of staff and service delivery to promote high quality representation and legal work.

b. Services performed by a designated organization pursuant to this chapter or any contract or other agreement entered into pursuant to this chapter shall not be used to satisfy any obligations or responsibilities of such designated organization pursuant to any other program or any other agreement or contract.

§ 2. If any provision of this local law is for any reason found to be invalid, in whole or in part, by any court of competent jurisdiction, such finding shall not affect the validity of the remaining provisions of this local law, which shall continue in full force and effect.

§ 3. This local law shall take effect one hundred eighty days after enactment except that the commissioner of housing preservation and development shall take such actions as are necessary for its implementation, including the promulgation of rules, prior to such effective date.

Referred to the Committee on Housing and Buildings.

Int. No. 215

By Council Members Levine, Cabrera, Chin, Eugene, Mendez and Rodriguez (by request of the Manhattan Borough President).

A Local Law to amend the administrative code of the city of New York, in relation to requiring the department of transportation to make available on its website biographical information pertaining to all street and park name changes.

Be it enacted by the Council as follows:

Section 1. Declaration of legislative findings and intent. Due to increased awareness and questions from the people of the city of New York pertaining to the renaming and co-naming of streets, parks and structures, the Council believes it is appropriate to create a mechanism that will allow individuals to have biographical and/or background information available on an official city website that pertains to a renamed or co-named street, park or structure.

§2. Chapter 1 of title 25 of the administrative code of the city of New York, is amended by adding a new section 25-102.2, to read as follows:

§25-102.2 Posting certain information related to street and park names. Whenever a street, park, playground, facility or structure, or portion thereof is renamed or co-named pursuant to section 25-102.1 of this chapter, the department of transportation shall make, biographical and/or background information about the person or entity for whom the naming is on behalf of, available on its website within ninety days of the enactment of the local law which named the street, park, playground, facility or structure, or portion thereof.

§3. This local law shall take effect immediately upon its enactment into law and shall only be required for streets, parks and structures named after its enactment.

Referred to the Committee on Parks and Recreation.

Int. No. 216

By Council Members Levine, Chin, Johnson, Lander, Mendez, Rodriguez, Cohen and Rosenthal (by request of the Manhattan Borough President).

A Local Law to amend the administrative code of the city of New York, in relation to increasing the number of accessible pedestrian signals.

Be it enacted by the Council as follows:

Section 1. Section 19-188 of the administrative code of the city of New York is amended to read as follows:

§19-188 Accessible pedestrian signals program. a. *For purposes of this section, the following terms shall have the following meanings:*

1. "Accessible pedestrian signal" shall mean a device that communicates information about pedestrian signal timing in a nonvisual format.

2. "Exclusive pedestrian signal" shall mean a pedestrian control signal that allows pedestrians an exclusive interval at which to cross while traffic is stopped in all directions.

3. "Leading pedestrian signal" shall mean a pedestrian control signal that displays a walk indicator before a green indicator of a traffic control signal within the same intersection it is displayed.

4. "Protected bicycle lane" shall mean a portion of the roadway that has been separated for the exclusive use of bicycles.

b. The department shall establish an accessible pedestrian signals program. As part of this program, the department shall identify intersections where accessible pedestrian signals may be installed based on guidelines, including, but not limited to, those set forth in the most recent version of the manual on uniform traffic control devices. The department, after consultation with the mayor's office for people with disabilities and with advocates for and members of the visually impaired community, shall identify intersections which reflect the greatest crossing difficulty for persons with visual impairments. Commencing in 2012, the department shall annually install, based on such guidelines, an accessible pedestrian signal at each corner of twenty-five intersections identified by the department following such consultation. *In addition, the department shall install an accessible pedestrian signal at all corners of any intersection where the department plans to install a protected bicycle lane, an exclusive pedestrian signal or leading pedestrian signal. On an annual basis, commencing in 2015, the department shall also install an accessible pedestrian signal at all corners of any intersection where a protected bicycle lane, an exclusive pedestrian signal or leading pedestrian signal was installed prior to the effective date of the local law that amended this section, at a minimum of fifty such intersections per year until such time as all such intersections have such signals.*

[b] *c*. On or before November 30, 2012, and on or before every November 30 thereafter, the department shall post on its website a report analyzing the status of the accessible pedestrian signals program which shall include, but not be limited to, a detailed assessment of the program including cost, funding sources for such program including, but not limited to city, state and federal funding, recommendations for improvements to such program, availability of new technology that may be employed by the department for use in such program and any additional intersections in the city that may warrant inclusion in such program. In addition, such report shall list the fifty top ranked intersections for new accessible pedestrian signals, as evaluated by the department after consultation with the mayor's office for people with disabilities and with advocates for and members of the visually impaired community, based on the criteria set forth in subdivision a of this section.

[c] *d*. The department shall post on its website the locations of all such accessible pedestrian signals, disaggregated by community district and council district.

§2. This local law shall take effect immediately.

Referred to the Committee on Transportation.

Res. No. 138

Resolution calling on the New York State Legislature to pass, and the Governor to sign, A.5723-A/S.3995-A, legislation that would ensure that consumers have the option to access every covered medication from a local network participating pharmacy, including HIV/AIDS medications, and are not forced into mandatory mail order.

By Council Members Levine, Johnson, Chin, Dickens, Dromm, Lander, Mendez, Richards, Wills, Arroyo and Rosenthal.

Whereas, In recent years, health insurance plans have increasingly mandated use of mail-order pharmacies for members with chronic illnesses; and

Whereas, Mail-order prescriptions strip business away from small pharmacies in the community and deprive beneficiaries of the personal service, attention and opportunity to ask questions that a local pharmacy would provide; and

Whereas, Community pharmacists develop relationships with local residents and know their medical history; and

Whereas, Those with HIV/AIDS often take a complex combination of medications that can change frequently; and

Whereas, Speaking to a pharmacist can help with medication adherence and prevent confusion and frustration; and

Whereas, Medication that is left with a neighbor or on a doorstep, especially medication that needs to be refrigerated, can violate the privacy of recipients and potentially compromise the effectiveness of that medication; and

Whereas, A class-action lawsuit claiming discrimination by Anthem Blue Cross in California led to a settlement in 2013 allowing those with HIV/AIDS to opt out of mail-order prescriptions; and

Whereas, A similar lawsuit is pending against United Healthcare in California; and

Whereas, In January 2012, a State law took effect which had the intent of guaranteeing that consumers would always have the choice of obtaining covered prescription drugs from a local network participating pharmacy; and

Whereas, Insurers have been able to work around this law to continue to force beneficiaries into mandatory mail-order programs on the basis of the medications they were prescribed; and

Whereas, New York insurers have also recently required pharmacies to meet unreasonable conditions, such as costly accreditations, on-call 24-hour nursing services and excessive liability insurance demands; and

Whereas, Local neighborhood pharmacies often cannot meet these requirements, forcing beneficiaries to use mail-order prescription services; and

Whereas, A.5723-A/S.3995-A, sponsored by Assembly Member Carl Heastie and Senator George Maziarz, would eliminate the need for pharmacies to agree to "terms and conditions" to fill prescriptions, which is how the onerous requirements are incorporated and imposed; and

Whereas, This legislation would also clarify definitions to prevent insurers from flouting the true intention of current law and provide beneficiaries with the privacy and acquisition options they deserve; now, therefore, be it

Resolved, That the Council of the City of New York calls on the New York State Legislature to pass and the Governor to sign A.5723-A/S.3995-A, legislation that would ensure that consumers have the option to access every covered medication from a local network participating pharmacy, including HIV/AIDS medications, and are not forced into mandatory mail-order.

Referred to the Committee on Health.

Int. No. 217

By Council Members Matteo, Koo, Ignizio, Ulrich, Barron, Chin, Dickens, Eugene, Gentile, Johnson, Richards, Vacca, Vallone, Wills and Koslowitz (by the request of Staten Island Borough President).

A Local Law to amend the administrative code of the city of New York, in relation to requiring the department of health and mental hygiene to make automated external defibrillators available to primary, intermediate and high schools that do not already receive such devices under any other provision of law.

Be it enacted by the Council as follows:

Section 1. Chapter one of title 17 of the administrative code of the city of New York is amended by adding a new section 17-188.1 to read as follows:

§17-188.1 Automated external defibrillators in schools. A. For purposes of this section, the term "automated external defibrillator" shall mean a medical device, approved by the United States food and drug administration, that: (i) is capable of recognizing the presence or absence in a patient of ventricular fibrillation and rapid ventricular tachycardia; (ii) is capable of determining, without intervention by an individual, whether defibrillation should be performed on a patient; (iii) upon determining that defibrillation should be performed, automatically charges and requests delivery of an electrical impulse to a patient's heart; and (iv) upon action by an individual, delivers an appropriate electrical impulse to a patient's heart to perform defibrillation.

b. The department shall provide automated external defibrillators to schools upon request in quantities deemed adequate in accordance with rules promulgated pursuant to subdivision c of this section and in accordance with section 3000-b of the New York state public health law to each primary, intermediate and high school located within the city of New York that is not eligible to receive automated external defibrillators under section 917 of the New York state education law or any other provision of law and that submits a written request to the department. Any school receiving automated external defibrillators pursuant to this subdivision shall ensure that such devices are readily accessible for use during medical emergencies. Any information regarding use of automated external defibrillators deemed necessary by the department in accordance with rules promulgated pursuant to subdivision c of this section shall accompany and be kept with each automated external defibrillator. Any automated external defibrillator provided pursuant to this subdivision shall be acquired, possessed and operated in accordance with the requirements of section 3000-b of the New York state public health law.

c. The commissioner shall promulgate such rules as may be necessary for the purposes of implementing the provisions of this section, including, but not limited to, rules regarding the quantity of automated external defibrillators to be provided to schools that request such devices, and any information on the use of automated external defibrillators that must accompany and be kept with each automated external defibrillator.

d. Nothing contained in this section shall impose any duty or obligation on any person to provide assistance with an automated external defibrillator to a victim of a medical emergency.

e. Any person who, in accordance with the provisions of this section, voluntarily and without expectation of monetary compensation renders first aid or emergency treatment using an automated external defibrillator that has been made available pursuant to this section, to a person who is unconscious, ill or injured, and any person, agency, school or other entity that acquires or makes available an automated external defibrillator pursuant to this section, shall be entitled to the limitation of liability provided in section 3000-a of the New York state public health law.

f. Standard of care. Nothing contained in this section shall be deemed to affect the obligations or liability of emergency health providers pursuant to section 3000-b of the New York state public health law.

§2. Severability. If any section, subsection, sentence, clause, phrase or other portion of this local law is, for any reason, declared unconstitutional or invalid, in whole or in part, by any court of competent jurisdiction, such portion shall be deemed severable, and such unconstitutionality or invalidity shall not affect the validity of the remaining portions of this local law, which remaining portions shall continue in full force and effect.

§3. This local law shall take effect one hundred and eighty days after its enactment into law, except that the commissioner shall take such measures as are necessary for its implementation, including the promulgation of rules prior to its effective date.

Referred to the Committee on Education.

Int. No. 218

By Council Members Mealy, King, Deutsch, Eugene and Koo.

A Local Law to amend the administrative code of the city of New York, in relation to the annual repair of street defects.

Be it enacted by the Council as follows:

Section 1. Subchapter one of chapter one of title 19 of the administrative code of the city of New York is amended by adding a new section 19-156 to read as follows:

§19-156 Annual repair of streets defects. Commencing in 2015 and annually thereafter, the department shall survey streets for street defects which shall include but not be limited to potholes, on or before March 21, and shall ensure that all such street defects discovered during such survey are repaired, corrected and/or fixed on or before May 21 of the same year. This section shall not be construed as to limit the liability of any entities for the cost of such repair, correction and/or fixing required of such defects or from liability for any damages that result from such defects.

§2. This local law shall take effect immediately upon enactment into law.

Referred to the Committee on Transportation.

Int. No. 219

By Council Members Mendez, Barron, Cabrera, Eugene, Johnson, Levine and Rosenthal (by request of the Manhattan Borough President).

A Local Law to amend the administrative code of the city of New York, in relation to creating a bicycle safety task force.

Be it enacted by the Council as follows:

Section 1. Legislative findings and intent. New York City is a unique urban environment and factors such as limited parking, traffic congestion and the availability of public transportation discourages car use. Consequently, many New Yorkers ride bicycles to work and other destinations. Bicyclists also ride for recreation and to improve health and fitness. Bicycling reduces road congestion and motor vehicle related pollution. The Council recognizes that increasing bicycling in New York City can create health and environmental benefits. The Council also recognizes that creating a safe environment for bicyclists can prevent injuries and fatalities. The Council finds that by establishing a mechanism for comprehensive review of bicycle use, including routes and pathways and bicycle safety, we will better understand how to improve the use of bicycles in New York City and encourage safe bicycling practices. Accordingly, the Council finds that a task force dedicated to reviewing the trends and patterns of bicycle use and creating ways to encourage safe bicycling practices in New York City is needed.

§2. Title 19 of the administrative code of the city of New York is amended by adding a new section 19-190 to read as follows:

§19-190 Bicycle safety taskforce. a. There shall be established a bicycle safety task force to examine the city's bicycle utilization and infrastructure. Such task force shall develop recommendations on how to make New York city more bicycle-friendly, which shall include, but not be limited to, the best ways to use federal funding to improve bicycling in New York City; changes in rules and regulations regarding bicycle routes, infrastructure components for bicycle lanes and bicycle parking; and educational campaigns and other measures to promote bicycling while ensuring the safety of bicyclists and pedestrians.

b. Such task force shall consist of the commissioner of the department of transportation, or his or her designee; the commissioner of the department of city

planning, or his or her designee; and the commissioner of the department of parks and recreation, or his or her designee. The mayor shall appoint two additional individuals, including one transportation expert and one person who advocates on bicycle use related issues; provided, however, that such individuals shall not hold any other public office, employment or trust. The speaker of the city council shall appoint two additional individuals, including one transportation expert and one person who advocates on bicycle use related issues; provided, however, that such individuals shall not hold any other public office, employment or trust.

c. Such task force shall be in effect for a term of two years. Any vacancy shall be filled in the same manner as the original appointment.

d. All members of such task force shall serve without compensation, except that each member shall be allowed actual and necessary expenses to be audited in the same manner as other city charges.

e. Such task force shall meet at least five times a year and shall hold a hearing in each of the five boroughs. The commissioner of the department of transportation shall serve as chairperson of such task force and shall convene the first meeting of such task force within ninety days after the effective date of the local law that added this section. Such task force shall issue and submit a report of its findings and recommendations to the mayor and the speaker of the city council no later than twelve months and twenty-four months after the effective date of the local law that added this section.

§3. Severability. If any sentence, clause, phrase or other portion of this local law is, for any reason, declared unconstitutional or invalid, in whole or in part, by any court of competent jurisdiction, such portion shall be deemed severable and such unconstitutionality or invalidity shall not affect the validity of the remaining portions of the local law that added this section, which remaining portions shall remain in full force and effect.

§4. This local law shall take effect immediately and shall be deemed repealed on May 31, 2016.

Referred to the Committee on Transportation.

Int. No. 220

By Council Members Mendez, the Public Advocate (Ms. James), Chin, Barron, Gentile, Johnson, Koo, Levine, Richards, Wills, Koslowitz and Rosenthal (by request of the Manhattan Borough President).

A Local Law to amend the administrative code of the city of New York, in relation to requiring the department of buildings to conduct structural inspections of those multiple dwellings that have a dangerous number of hazardous or immediately hazardous violations and the department of housing preservation and development to correct structural defects when the owner fails to do so.

Be it enacted by the Council as follows:

Section 1. Article 216 of chapter two of title 28 of the administrative code of the city of New York is amended to read as follows:

§28-216.12 Buildings and structures that are potentially compromised. For purposes of this section 28-216.12, "potentially compromised" shall include a building or structure that has had an open roof for sixty days or longer, that has been shored and braced or repaired pursuant to an emergency declaration issued by the commissioner, that has been subject to a precept as a compromised structure under Article 216 of this code [or], that may have suffered structural damage by fire or other cause as determined by the commissioner *or that has been referred to the department by the department of housing preservation and development pursuant to subdivision b of section 27-2096.1 of the administrative code*.

§28-216.12.1 Structural inspections of potentially compromised buildings or structures. *a.* When a building or structure has become potentially compromised, the [owner] *department* shall [cause] *conduct* a structural inspection of such building or structure [to be performed]. Such inspection shall be performed within sixty days of the opening of the roof, within sixty days of the shoring and bracing or repair work[, or], within sixty days of a determination by the commissioner that the building has suffered structural damage by fire or other cause, *or within sixty days of a referral to the department by the department of housing preservation and development pursuant to subdivision b of section 27-2096.1 of the administrative code*. A report of such inspection shall be filed with the department within thirty days thereafter in such form and detail and with provision for periodic monitoring of the building or structure as the commissioner may require.

b. Where an inspection of a multiple dwelling pursuant to subdivision a reveals a structural defect, the department shall issue an order directing the respondent to correct such condition as provided in section 28-204.2 of this code.

c. Where the condition is not certified as corrected within the time specified in section 28-204.2, the department shall notify the department of housing preservation and development, which shall correct such condition if possible pursuant to subdivision a of section 27-2125.

§28-216.12.5. The [owner] *department shall perform or cause* a registered design professional to perform a structural inspection of buildings and structures subject to section 28-216.12 prior to the issuance of a permit to alter, repair, demolish or enlarge such building or structure, except that the commissioner may waive such inspection if a structural inspection of the entire building or structure has been performed within the prior year.

§2.Article one of subchapter four of chapter two of title 27 of the administrative code of the city of New York is amended by adding a new section 27-2096.1 to read as follows:

§27-2096.1 Mandatory referral and repair. a. For purposes of this section the following terms shall be defined as follows:

1. "Violation of record," shall mean violation of chapter two of title twenty-seven of this code.

2. "Dangerous number of violations of record," shall mean i. Twenty-five or more violations or record that are classified as immediately hazardous; or

ii. Fifty or more violations of record that are classified as hazardous or immediately hazardous; or

iii. Any number of violations of record that are classified as hazardous or immediately hazardous that in the aggregate are equal to or greater than two times the total number of dwelling units in the multiple dwelling.

b. After identifying a multiple dwelling that contains a dangerous number of violations of record, the department shall notify the department of buildings of such identification and the department of buildings shall conduct a structural inspection of such multiple dwelling pursuant to subdivision a of section 28-216.12 of this code.

§3.This local law shall take effect ninety days after its enactment, except that the commissioner of buildings shall take such action as is necessary for its implementation, including the promulgation of rules, prior to such effective date.

Referred to the Committee on Housing and Buildings.

Int. No. 221

By Council Members Mendez, Chin, Constantinides, Eugene, Johnson, Lander, Wills and Rosenthal.

A Local Law to amend the administrative code of the city of New York, in relation to providing legal counsel for parents and guardians with minor children who are subject to eviction, ejectment or foreclosure proceedings.

Be it enacted by the Council as follows:

Section 1. Title 27 of the administrative code of the city of New York is amended by adding a new chapter 4 to read as follows:

Chapter 4

Provision of Legal Services in Eviction, Ejectment and Foreclosure Proceedings.

§ 27-4001 Definitions.
§ 27-4002 Civil justice coordinator.
§ 27-4003 Designation of eligible organizations.
§ 27-4004 Method of assigning legal counsel.
§ 27-4005 Compensation.

§ 27-4001 Definitions. For purposes of this chapter the following terms shall have the following meanings:

"Covered proceeding" means any action or special proceeding to evict an occupant of a dwelling unit or dwelling to which an eligible individual is a party, including those seeking possession for the non-payment of rent or holdover, or proceedings for ejectment or foreclosure.

"Eligible individual" means an occupant of a rental dwelling unit, an owner of shares of a cooperative corporation who occupies the dwelling unit to which such shares are allocated, the owner and occupant of a dwelling unit owned as a condominium or the owner and occupant of a one- or two-family dwelling where such dwelling unit or dwelling is located in the city of New York who is a defendant or respondent in a covered proceeding and who is the parent or guardian of one or more minor children.

"Designated organization" means an organization that provides legal counsel and is identified and designated by the civil justice coordinator pursuant to section 27-4003 of this chapter.

"Legal counsel" means a lawyer or lawyers licensed to practice law in New York state.

§ 27-4002 Civil justice coordinator. The commissioner of housing preservation and development shall appoint a civil justice coordinator who shall be responsible for establishing and implementing a program for the provision of legal services for eligible individuals with respect to covered proceedings.

§ 27-4003 Designation of organizations. a. The civil justice coordinator shall identify one or more organizations eligible to provide legal counsel in accordance with the provisions of this chapter. An organization may be designated as an eligible organization by the civil justice coordinator if it:

i. has as a principal purpose the furnishing of free or low-cost legal services to persons who are unable to afford private legal counsel;

ii. has substantial expertise in housing law and landlord and tenant law and relevant experience in representing low-income tenants in the civil court of the city of New York;

iii. operates pursuant to the standards contained in section 4 (standards for relations with clients) and section 6 (standards for quality assurance) of the

standards for providers of civil legal aid established by the american bar association; and

iv. satisfies such other criteria as may be established by the commissioner of housing preservation and development.

b. The commissioner of housing preservation and development shall by rule establish procedures for the monitoring by the civil justice coordinator of the services provided pursuant to this chapter to ensure that designated organizations are providing competent legal services.

c. The civil justice coordinator shall annually review the performance of designated organizations and may decline to renew the designation of any such organization.

§ 27-4004 Method of assigning legal counsel. a. The civil justice coordinator shall cause a designated organization to be expeditiously assigned to represent an eligible individual upon receipt of a request for such services from:

i. the eligible individual;

ii. a judge to whom a covered proceeding has been assigned or an administrative judge; or

iii. a designated organization.

b. The civil justice coordinator shall require each designated organization to identify the geographic areas from which the organization will represent eligible individuals, and for each geographic area to maintain a list of such organizations that will represent such individual.

§ 27-4005 Compensation. a. The civil justice coordinator shall provide each designated organization assigned pursuant to this chapter with fair compensation which will allow each organization to provide an organizational structure with appropriate supervision, caseloads and oversight of staff and service delivery to promote high quality representation and legal work.

b. Services performed by a designated organization pursuant to this chapter or any contract or other agreement entered into pursuant to this chapter shall not be used to satisfy any obligations or responsibilities of such designated organization pursuant to any other program or any other agreement or contract.

§ 2. If any provision of this local law is for any reason found to be invalid, in whole or in part, by any court of competent jurisdiction, such finding shall not affect the validity of the remaining provisions of this local law, which shall continue in full force and effect.

§ 3. This local law shall take effect one hundred eighty days after enactment except that the commissioner of housing preservation and development shall take such actions as are necessary for its implementation, including the promulgation of rules, prior to such effective date.

Referred to the Committee on Housing and Buildings.

Int. No. 222

By Council Member Mendez, the Public Advocate (Ms. James), Barron, Chin, Gibson, Johnson, Koslowitz and Rosenthal (by request of the Manhattan Borough President).

A Local Law to amend the administrative code of the city of New York, in relation to amending the obligations of owners to provide notice to their tenants for non-emergency repairs.

Be it enacted by the Council as follows:

Section 1. Section 27-2005 of the administrative code of the city of New York is amended by adding a new subdivision e to read as follows:

e. (i) The owner of a dwelling shall provide legal occupants with at least seventy-two hours notice prior to making repairs or performing other work in a dwelling and within a particular dwelling unit which would cause an interruption in services. Such notice shall be posted in a prominent place within the public part of the building and shall be placed under the entrance doors of each dwelling unit. The notice shall state the type of work being performed and the estimated start and end of the service interruption.

(ii) The provisions of this section shall not apply to repairs or work performed on an emergency basis. The department shall by rule determine what constitutes an emergency basis. Any repairs made pursuant to section 27-2125 of this code shall be exempt from the provisions of this subdivision.

§2.This local law shall take effect ninety days after its enactment, except that the department shall take such measures, including the promulgation of rules, as are necessary for its implementation prior to such effective date.

Referred to the Committee on Housing and Buildings.

Int. No. 223

By Council Members Mendez, Barron, Chin, Eugene, Johnson and Rosenthal (by request of the Manhattan Borough President).

A Local Law to amend the New York City charter, in relation to the creation of an annual report to assess the city's indigent legal representation.

Be it enacted by the Council as follows:

Section 1. Statement of findings and purpose. New Yorkers who cannot afford private legal counsel in criminal cases rely on a system of attorneys funded primarily by the City with some contribution from the State. These attorneys represent adults in matters before Criminal and Supreme Courts, children and adults in Family Court, and children and adults in appeals from these courts. Access to such representation, is crucial as the outcome of a criminal case has life-altering consequences, ranging from whether someone goes to jail to whether a child is separated from his or her parents. Since this representation is so vital, it is important for both the administration and the Council to evaluate the quality of the representation provided.

It is difficult to apply objective criteria to legal representation, however, where the characteristics of a particular case may have greater affect on the outcome of the case than the quality of representation. Moreover, "success" can have very different meanings in different cases. For example, in some cases on termination of parental rights, the welfare of a child may be best protected if the child is separated from his or her parents; in other such cases, a child may be better off remaining with his or her parents. Accordingly, caution is required before using objective criteria to assess any particular attorney, or an organization's work in a small number of cases.

The Council finds that the lack of information available to the Council on a regular basis limits the Council's ability to understand and assess the quality of indigent legal representation in the City. Accordingly, the Council declares that it is reasonable and necessary to mandate the creation of an annual report to assess the City's indigent legal representation.

§2. Section 13 of chapter one of the New York City Charter is amended to read as follows:

§13. **Coordinator of criminal justice.** *a.* There is established in the executive office of the mayor a position of coordinator of criminal justice, to be appointed by the mayor. The coordinator shall:

(1) advise and assist the mayor in planning for increased coordination and cooperation among agencies under the jurisdiction of the mayor that are involved in criminal justice programs and activities;

(2) review the budget requests of all agencies for programs related to criminal justice and recommend to the mayor budget priorities among such programs; and

(3) perform such other duties as the mayor may assign.

b. By October 1 of each year, the coordinator of criminal justice shall submit a report to the council and mayor providing quantitative data assessing, for criminal court, supreme court, family court, and appellate courts, the cost and quality of representation provided by any organization funded by the city to provide indigent legal defense, including the panel of 18-b attorneys of the appellate division first judicial department and the panel of 18-b attorneys of the appellate division second judicial department.

§3. This local law shall take effect immediately upon enactment.

Referred to the Committee on Fire and Criminal Justice Services.

Res. No. 139

Resolution calling upon the New York State Legislature to pass, and the Governor to sign, S.2503/A.1533, legislation which would increase the penalties for leaving the scene of a motor vehicle incident without reporting.

By Council Members Mendez, Chin, Constantinides, Levine and Vallone.

Whereas, Instances of drivers leaving the scene of a motor vehicle collision without reporting ("hit-and-run") are a serious problem in New York City; and

Whereas, The New York City Police Department's Collision Investigation Squad, which until 2013 responded to vehicle crashes involving a victim who died or was deemed "likely to die," investigated 58 hit-and-run cases in 2012, resulting in 15 arrests; and

Whereas, The many tragic cases of hit-and-run drivers killing innocent New Yorkers include the death of a five-year-old boy in Staten Island in August 2013, the death of a teenager in Woodside, Queens in September 2013, and the death of a five-year-old boy in Crown Heights, Brooklyn in March 2014; and

Whereas, Under the New York State Vehicle and Traffic Law, the first offense of leaving the scene of a motor vehicle incident without reporting where a personal injury occurs is a class A misdemeanor with a maximum penalty of one year of imprisonment; and

Whereas, A driver faces charges of a class E felony only for a subsequent offense, or if a victim suffers "serious physical injury" as defined by the Penal Law; and

Whereas, If a driver remains at the scene of an incident where serious physical injury occurs and is intoxicated or impaired by drugs or a combination of drugs and alcohol, he or she can be charged with a class E felony with a maximum penalty of four years of imprisonment; and

Whereas, S.2503, sponsored by Senator Martin J. Golden, and A.1533, sponsored by Assembly Member Steven Cymbrowitz, would increase all penalties for leaving the scene of an incident without reporting; and

Whereas, Specifically, the legislation would result in a first-time hit-and-run offender who causes personal injury to face a charge of a class E felony, which would

be commensurate with the charge faced by a drunk driver who causes serious physical injury and remains at the scene; and

Whereas, Penalties should not be less severe for a driver who injures others and leaves the scene than for a drunk driver who causes serious physical injury and remains at the scene; and

Whereas, Increasing the penalties for leaving the scene will deter drivers from leaving injured victims on the road, facilitate police investigation, and permit chemical testing of drivers by the police in cases where such testing is warranted; now, therefore, be it

Resolved, That the Council of the City of New York calls upon the New York State Legislature to pass, and the Governor to sign, S.2503/A.1533, legislation which would increase the penalties for leaving the scene of a motor vehicle incident without reporting.

Referred to the Committee on Public Safety.

Res. No. 140

Resolution calling upon the United Parcel Service to revoke the notices of termination delivered to employees at its warehouse in Maspeth and resolve its dispute with these employees through negotiations with the International Brotherhood of Teamsters Local 804.

By Council Members Miller, Barron, Chin, Constantinides, Lander, Mendez, Richards, Kallos and Koslowitz.

Whereas, The United Parcel Service (UPS) fired an employee at its Maspeth, Queens warehouse and distribution hub in February 2014, according to the International Brotherhood of Teamsters Local 804 ("Local 804"), which represents the employee; and

Whereas, According to Local 804 news releases, other UPS employees and their Union felt that this employee's termination was undeserved and in violation of negotiated procedures for resolving disciplinary disputes and grievances; and

Whereas, In response to these concerns, roughly 250 employees of the UPS Maspeth warehouse staged a job action and protest, according to CBS News; and

Whereas, Following the job action, Local 804 engaged UPS in negotiations to try to resolve the dispute; and

Whereas, However, according to Local 804, on March 6th, 2014, UPS sent notices of termination to those 250 employees who had participated in the job action; and

Whereas, In so doing, UPS both imperiled the negotiation process and threatened the livelihoods of 250 workers; and

Whereas, Following the issuance of these termination notices, Local 804 again publicly voiced its commitment to addressing the dispute through negotiation; and

Whereas, Key leaders, including former United States Secretary of Labor Robert Reich, United States Representatives Joseph Crowley and Grace Meng, and New York City Public Advocate Leticia James, have expressed support for the UPS employees who were delivered termination notices, according to Local 804; and

Whereas, Although UPS maintains that the job action was illegal, these tools have long been staples of successful labor movements, and union members should not be restricted from employing these strategies if they feel workers are being treated unfairly; and

Whereas, The swift reinstatement of negotiations and withdrawal of the termination notices would restore labor-management relations, show respect for the rights of employees, and preserve the functioning of UPS's key Maspeth hub; now, therefore, be it

Resolved, That the Council of the City of New York calls upon the United Parcel Service to revoke the notices of termination delivered to employees at its warehouse in Maspeth and resolve its dispute with these employees through negotiations with the International Brotherhood of Teamsters Local 804.

Referred to the Committee on Civil Service and Labor.

Int. No. 224

By Council Member Palma.

A Local Law to amend the administrative code of the city of New York, in relation to personal online accounts and employment.

Be it enacted by the Council as follows:

Section 1. Subdivision (e) of section 2203 of the New York city charter, as added by local law number 46 for the year 2013, is hereby amended to read as follows:

(e) The commissioner shall have all powers as set forth in [chapter] *chapters* 8 *and 9* of title 20 of the administrative code relating to the receipt, investigation, and resolution of complaints thereunder regarding earned sick time *and confidentiality of personal online accounts*.

§ 2. Paragraph 1 of subdivision (h) of section 2203 of the New York city charter, as relettered by local law number 46 for the year 2013, is hereby amended to read as follows:

(h)(1) Notwithstanding any inconsistent provision of law, the department shall be authorized, upon due notice and hearing, to impose civil penalties for the violation of any laws or rules the enforcement of which is within the jurisdiction of the department pursuant to this charter, the administrative code or any other general, special or local law. The department shall have the power to render decisions and orders and to impose civil penalties for all such violations, and to order equitable relief for and payment of monetary damages in connection with enforcement of [chapter] *chapters* 8 *and 9* of title 20 of the administrative code. Except to the extent that dollar limits are otherwise specifically provided, such civil penalties shall not exceed five hundred dollars for each violation. All proceedings authorized pursuant to this subdivision shall be conducted in accordance with rules promulgated by the commissioner. The remedies and penalties provided for in this subdivision shall be in addition to any other remedies or penalties provided for the enforcement of such provisions under any other law including, but not limited to, civil or criminal actions or proceedings.

§ 3. Title 20 of the administrative code of the city of New York is amended by adding a new chapter 9 to read as follows:

CHAPTER 9

RIGHT OF EMPLOYEES AND PROSPECTIVE EMPLOYEES TO CONFIDENTIALITY OF PERSONAL ONLINE ACCOUNTS

§ 20-930 ***Definitions.*** *For purposes of this chapter, the following terms shall be defined as follows:*

a. "Electronic communications device" shall mean any device that uses electronic signals to create, transmit, and receive information, including a computer, telephone, personal digital assistant or similar device.

b. "Employee" shall mean any person who provides services to an employer in return for the payment of direct or indirect monetary wages or profit from such employer, or provides services to an employer for no monetary compensation for the purpose of obtaining employment experience and training from such employer.

c. "Employment agency" shall mean any person undertaking to procure employees or opportunities to work.

d. "Employer" shall mean any person, partnership, association, corporation or non-profit entity which employs one or more persons, including agencies of the city of New York, as defined in section 1-112 of the code, and the council of the city of New York, or an employer's agent, representative or designee. Employer shall also include an employment agency and a labor organization as defined in this section.

e. "Labor organization" shall mean any organization which exists and is constituted for the purpose, in whole or in part, of collective bargaining or of dealing with employers concerning grievances, terms and conditions of employment, or of other mutual aid or protection in connection with employment.

f. "Personal online account" shall mean any online account, service or profile on a website, including, but not limited to, any social media, email provider or electronic-commerce website, that is protected by a password or other means of authentication, and is intended to be used primarily or exclusively by an employee or prospective employee for personal communications or other personal use.

g. "Social and networking media account" shall mean any personal online account that allows individuals to: construct a public or semi-public profile within a bounded system created by such service; create a list of other users with whom such individuals share a connection within the system; and view and navigate such individuals' list of connections and those made by others within the system the content of which may include, but is not limited to, videos, still photographs, instant messages, text messages and email.

§ 20-931 ***Prohibition against employers requiring access to personal online accounts****. a. No employer shall request, require or otherwise coerce an employee, or a prospective employee in connection with the interview or hiring process, to:*

(1) provide a password or other means of authentication in order to gain access to such employee or prospective employee's personal online accounts;

(2) access such employee or prospective employee's personal online accounts in the presence of the employer or prospective employer; or

(3) alter the privacy settings on such employee or prospective employee's personal online accounts that would allow the employer or prospective employer to view the content of such accounts.

b. No employer shall require or otherwise coerce an employee or prospective employee to add any person, including the employer or prospective employer, to the list of contacts associated with such employee or prospective employee's personal online accounts, provided that a request to add such a person to the list of contacts associated with such accounts shall not itself be unlawful.

c. No employer shall discharge, discipline, threaten to discharge or discipline, or otherwise retaliate against an employee for failing to comply with a request or demand by such employer that violates this section or for filing a complaint pursuant to this chapter. However, this section does not prohibit an employer from terminating or otherwise taking an adverse action against an employee if otherwise permitted by law.

d. Paragraph two of subdivision a of this section shall not apply to accessing social and networking media accounts in connection with the investigation of a prospective employee for employment:

1. as a police officer, as that term is defined in subdivision thirty-four of section 1.20 of the criminal procedure law, or a peace officer, as that term is defined in section 2.10 of the criminal procedure law;

2. as an officer or uniformed member of the fire department of the city of New York; or

3. as an officer or uniformed member of the correction department of the city of New York.

§ 20-932 ***Application of chapter.*** *a. Nothing in this chapter shall prohibit an employer from obtaining information about an employee or prospective employee that is publicly available.*

b. Nothing in this chapter shall affect an employer's rights and obligations to require that an employee share specific content of such employee's personal online account, provided that access can be provided to such account to such employer without requiring such employee to provide a user name and password, or other means of authentication that provides access to such account, as part of an investigation:

1. for the purpose of ensuring compliance with applicable laws and regulatory requirements;

2. for the purpose of enforcing prohibitions against work-related employee misconduct based on the receipt of specific information by an employer or other source about activity of an employee on a personal online account; or

3. of an employee's actions based on the receipt of specific information about the unauthorized transfer by an employee of an employer's proprietary or confidential information, or financial data by an employee via such account.

c. Nothing in this chapter shall preclude an employer from requiring, or requesting an employee to disclose, a username, password, or other authentication means for accessing:

1. an online account created, provided or used by virtue of the employee's employment relationship with the employer; or

2. an electronic communications device supplied by or paid for by the employer.

d. Nothing in this chapter shall preclude an employer from lawful monitoring of employees' use of employer owned computers, networks or servers, including any use of personal online accounts on such computers, networks or servers.

e. If through lawful monitoring of an employee's use of employer owned computers, networks, servers, or electronic communications devices, an employer inadvertently received an employee's password or other authentication information, such employer is not liable for possessing such password or authentication information, but may not use such password or authentication information to access an employee's personal online account.

f. Nothing in this chapter shall preclude an employer from complying with requirements of state and federal statutes, rules or regulations, case law or self-regulatory organizations as defined in section 3(a)(26) of the securities and exchange act of 1934, 15 U.S.C. § 78(c)(a)(26), which require the recording and storage of certain business related communications. For purposes of this exception, an employer may require access to personal online accounts under such laws, rules and regulations only if such employer has a reasonable belief that such accounts have been used for business purposes.

g. Nothing in this chapter shall preclude an employer from reviewing information or receiving access to employees' personal online accounts pursuant to lawful subpoena or court order.

§ 20-933 ***Enforcement****. a. The department shall enforce the provisions of this chapter. The department shall utilize multiple means of communication to receive complaints regarding non-compliance with this chapter and shall investigate complaints received by the department in a timely manner.*

b. Any person alleging a violation of this chapter shall have the right to file a complaint with the department within one hundred eighty days of the date such person knew or should have known of the alleged violation. The department shall maintain as confidential the identity of any complainant unless disclosure of such complainant's identity is necessary for resolution of the investigation or otherwise required by law. The department shall, to the extent practicable, notify such complainant that the department will be disclosing his or her identity prior to such disclosure.

c. Any person claiming to be aggrieved by an act that violates section 20-931 of this chapter may make, sign and file with the department a verified complaint in writing and proceed with such complaint, or commence a civil action and proceed with such action. Upon receiving a complaint alleging a violation of this chapter, the department shall investigate such complaint. The department shall keep complainants reasonably notified regarding the status of their complaint and any resultant investigation. If the department believes that a violation has occurred, it shall issue a notice of violation to the employer that is the subject of the complaint. The commissioner shall prescribe the form and wording of such notices of violation. The notice of violation shall be returnable to the administrative tribunal authorized to adjudicate violations of this chapter.

d. The department may also itself make, sign and file a verified complaint alleging that an employer has violated section 20-931 of this chapter and proceed with such complaint pursuant to the provisions of subdivision c of this section.

e. In addition to the aforementioned provisions of this section, any person claiming to be aggrieved by a violation of this chapter shall have a cause of action in any court of competent jurisdiction for compensatory damages, injunctive and declaratory relief, attorney's fees and costs, and such other relief as such court deems appropriate. Submitting a complaint to the department shall be neither a prerequisite nor a bar to bringing a private action.

f. A person must file a complaint with the department or a court of competent jurisdiction within one hundred eighty days of when that person knew or should have known of an alleged violation of this chapter.

§ 20-934 ***Violations****. a. Notwithstanding any inconsistent provision of law, if, in an action instituted pursuant to this chapter judgment is rendered in favor of complainant, the department shall have the power to impose penalties provided for in this chapter and to grant an employee, prospective employee or former employee all appropriate relief. Such relief shall include a civil penalty of not less than two hundred and fifty dollars but not more than two thousand dollars for each violation, and equitable relief, as appropriate, including, but not limited to, ordering an injunction prohibiting any acts tending to render ineffectual relief that could be ordered by the department after a hearing as provided by this chapter.*

b. No employer shall be liable for more than one violation of section 20-931 pertaining to the same complainant during a single day.

§ 4. This local law shall take effect one hundred and twenty days after its enactment into law.

Referred to the Committee on Civil Service and Labor.

Res. No. 141

Resolution calling on the United States Congress to pass and the President to sign a comprehensive immigration reform bill that does not include any provisions that would further deny Social Security benefits to undocumented immigrants.

By Council Members Palma, Menchaca, Barron, Chin, Eugene, Johnson, Levine, Mendez and Rosenthal.

Whereas, On June 27, 2013, the United States Senate passed S. 744, a comprehensive immigration reform bill, which would, among other things, provide a pathway to citizenship for approximately 11 million undocumented immigrants residing in the United States; and

Whereas, Notwithstanding the tremendous benefits of the bill, section 2107(d) of S.744 would, for the first time, deny immigrants transitioning to citizenship credit toward Social Security benefits for work performed while undocumented; and

Whereas, The United States Social Security Administration ("SSA") administers the Social Security program, which provides retirement, disability, and survivor benefits to workers and their families, and is paid for, in part, by taxes on the earnings of workers, including many undocumented workers; and

Whereas, Currently, in order for immigrants to receive Social Security benefits they must: (i) work long enough to obtain insured status under the program; (ii) receive legal work status at some time; and (iii) receive legal immigration status for the time of their benefit entitlement; and

Whereas, The SSA created the Earnings Suspense File ("ESF") to reserve the Social Security tax payments of filers with mismatched names and Social Security numbers, in anticipation of later paying out those earnings; and

Whereas, According to The Medicare News Group's January 2013 article, 75 percent of ESF contributions are from undocumented workers, which, in 2010, totaled nearly $2 billion for Medicare and $8.7 billion for Social Security; and

Whereas, Immigrants, regardless of their status, contribute greatly to the City's economy; for example, according to a New York State Comptroller's November 2013 report, immigrants accounted for 44 percent of the City's workforce and $210 billion in economic activity; and

Whereas, Despite immigrants' contributions to the Social Security program and the economy as a whole, section 2107(d) of S. 744 would, more specifically, overturn existing law that allows immigrants transitioning to citizenship to receive credit toward Social Security benefits for work performed while undocumented between 2004 and 2014; and

Whereas, Denying these Social Security credits and benefits would essentially impose a lifelong penalty for legalizing immigration status, by reducing Social Security benefits for the immigrant elderly and denying disability and survivor's benefits to immigrant families; and

Whereas, Denying these Social Security credits and benefits would further impoverish immigrant families, forcing the City of New York to cover resulting social costs, and negatively affecting the City's economy; and

Whereas, Denying these Social Security credits and benefits would discourage immigrants from becoming citizens, and further push immigrants into the shadows; and

Whereas, The passage of S. 744 without section 2107 (d) would be fairer to all immigrants, especially to the estimated 500,000 undocumented immigrants who call New York City their home, as it would allow them to continue to receive the Social Security credits toward benefits they worked for and contributed to; now, therefore, be it

Resolved, That the Council of the City of New York urges the United States Congress to pass and the President to sign a comprehensive immigration reform bill that does not include any provisions that would further deny Social Security benefits to undocumented immigrants.

Referred to the Committee on Immigration.

Int. No. 225

By Council Members Rodriguez, Barron, Dromm, Lander, Levine and Ulrich.

A Local Law to amend the administrative code of the city of New York, in relation to citi bike financial reporting.

Be it enacted by the Council as follows:

Section 1. Subchapter 3 of chapter one of title 19 of the administrative code of the city of New York is amended by adding a new section 19-190 to read as follows:

§19-190 Citi bike financial data reporting. a. The department shall compile all financial data regarding the citi bike program. The data shall include, but not be limited to, revenues generated by the citi bike program, whether the program had a deficit or a profit and how much such deficit or profit was, and the amount of revenue that was allocated to the department and separately to the operator of the program. For purposes of this section, "citi bike" shall mean New York city's bike share program.

b. On or before March 1, 2015, and annually thereafter, the department shall provide a report to the council and post on its website the information compiled pursuant to subdivision a of this section for the prior calendar year.

§2. This local law shall take effect immediately.

Referred to the Committee on Transportation.

Res. No. 142

Resolution calling on the United States Congress to pass and the President to sign H.R. 1593, also known as the "STOP Act", which would establish a Sexual Assault and Oversight Response Council.

By Council Members Rose, Barron, Lander and Mendez.

Whereas, According to the United States ("U.S.") Army, women currently serve in 95 percent of all Army occupations and comprise 15.7 percent of individuals on active duty; and

Whereas, Women have long served with honor in U.S. armed forced, dating back to the establishment of the U.S. Army in 1775; and

Whereas, Woman play an integral role in preserving the freedom of the U.S.; and

Whereas, According to a 2013 report issued by The Pentagon, during fiscal year 2012, there were an estimated 26,000 incidents of sexual assault in the military with only 3,374 incidents reported; and

Whereas, Sexual assaults include, but are not limited to, rape, aggravated sexual contact, and abusive and wrongful sexual contact; and

Whereas, H.R. 1593, sponsored by Congresswoman Jackie Speier and currently pending before the United States House of Representatives, seeks to establish a sexual assault and oversight response council in order to properly address reported acts of sexual assault in the military; and

Whereas, H.R. 1593 is also known as "the Sexual Assault Training Oversight and Prevention Act" or "STOP Act"; and

Whereas, The STOP Act would establish a Sexual Assault Oversight and Response ("SAOR") Council, composed mainly of civilians, as an independent entity from the chain of command of the U.S. Department of Defense; and

Whereas, The STOP Act would establish within the U.S. Department of Defense a SAOR Office to undertake specified duties and responsibilities relating to the investigation, prevention, and reduction of sexual assault incidents within the Armed Forces; and

Whereas, The STOP Act would establish a Director of Military Prosecutions who would be appointed by the SAOR Council to have independent and final authority to oversee the prosecution of all sexual-related offenses committed by a member of the Armed Forces, and to refer such cases to trial by courts-martial; and

Whereas, The STOP Act would would help remove the reporting, oversight, investigation and victim care of sexual assaults from the U.S. military's normal chain of command, place jurisdiction in the newly created, autonomous SAOR Office comprised of civilian and military experts, and help victims receive justice; now, therefore be it

Resolved, That the Council of the City of New York calls on the United States Congress to pass and the President to sign H.R. 1593, also known as the "STOP Act", which would establish a Sexual Assault and Oversight Response Council.

Referred to the Committee on Women's Issues.

Int. No. 226

By Council Members Treyger, Barron, Chin, Cornegy, Deutsch, Dromm, Eugene, Koo, Lander, Levine, Mendez, Richards, Maisel, Arroyo, Lancman, Torres, Palma, and Cohen.

A Local Law to amend the administrative code of the city of New York, in relation to requiring snowplows to be fitted with lights and audible warnings to prevent pedestrian deaths.

Be it enacted by the Council as follows:

Section 1. Chapter 1 of title 10 of the administrative code of the city of New York is amended by adding a new section 10-172 to read as follows:

§ 10-172 Snowplows. All vehicles engaged in the removal of snow on roads, sidewalks, parking lots and pedestrian walkways shall be equipped with flashing lights and audible warnings no later than January first, two thousand sixteen. The flashing lights will be operational at all times and the audible warnings will be operational between the hours of seven a.m. and ten p.m. The audible warnings shall comply with section 24-218 of this code.

§ 2. Section 16-126 of the administrative code of the city of New York is amended by adding a new subsdivision e to read as follows:

e. All vehicles engaged in the removal of snow shall be equipped with flashing lights and audible warnings. The flashing lights will be operational at all times and the audible warnings will be operational between the hours of seven a.m. and ten p.m. The audible warnings shall comply with section 24-218 of this code.

§2. This local law shall take effect one hundred eighty days after enactment.

Referred to the Committee on Sanitation and Solid Waste Management.

Int. No. 227

By Council Members Ulrich and Vallone.

A Local Law to amend the New York city charter, in relation to requiring the department of education, in consultation with the New York city police department, to provide additional security measures in public schools.

Be it enacted by the Council as follows:

Section 1. Section 528 of the New York city charter is amended to read as follows:

§528. The installation and operation of security cameras *and additional security measures* at New York City public schools.

a. Installation of Security Cameras *and Buzzer Systems, and Other Security Measures*. The New York City department of education, in consultation with the New York City police department, shall install security cameras *and buzzer systems, and lock all entrance and exit doors* at schools and consolidated school locations operated by the department of education where the chancellor, in consultation with the New York City police department, deems such [cameras] *measures* appropriate for safety purposes. Such cameras may be placed at the entrance and exit doors of each school and may be placed in any area of the school where individuals do not have a reasonable expectation of privacy. *Such buzzer systems may be installed at main entry doors concurrently with security cameras or where security cameras have previously been installed.* The number, type, placement, and location of such cameras, *buzzer systems and equipment used to lock entrance and exit doors* within each school shall be at the discretion of the department of education, in consultation with the principal of each school and the police department.

b. Schedule of Installation. The department of education, in consultation with the police department, shall set the priorities for installation of cameras *and buzzer systems, and the plan to lock all entrance and exit doors* as set forth in subdivision a to include among other appropriate factors consideration of the level of violence in schools, as determined by the police department and the department of education. By the end of 2006, the potential installation of cameras shall have been reviewed for all schools under the jurisdiction of the department of education, including elementary schools. At the end of 2006, the department of education shall submit a report to the city council indicating, for each school under its jurisdiction, the findings of the review and the reasons for the findings contained therein. *By March 1, 2015, the potential installation of buzzer systems and the decision to lock entrance and exit doors shall have been reviewed for all schools under the jurisdiction of the department of education, including elementary schools. By October 1, 2015, the department of education shall submit a report to the city council indicating, for each school under its jurisdiction, the findings of the review and the reasons for the findings contained therein.*

§2. This local law shall take effect 90 days after its enactment.

Referred to the Committee on Education.

Int. No. 228

By Council Members Ulrich and Kallos.

A Local Law to amend the New York city charter, in relation to conflicts of interest and the board of elections.

Be it enacted by the Council as follows:

Section 1. Subdivision b of section 2604 of the New York city charter is amended by adding a new paragraph 16 to read as follows:

16. No regular employee of the board of elections of the city of New York shall receive compensation for any work performed on behalf of the campaign of any candidate for an elective office of the city or any elected official who is a candidate for any elective office of the city.

§2. This local law shall take effect ninety days after its enactment.

Referred to the Committee on Governmental Operations.

Res. No. 143

Resolution calling upon the New York State Legislature to pass, and the Governor to sign S.1707 and A.4098, legislation establishing a veterans tax credit for businesses that hire veterans and disabled veterans.

By Council Members Ulrich, Barron, Chin, Dickens, Eugene, Gentile, Vallone, Wills and Rosenthal.

Whereas, Veterans who have served since September 2001 are experiencing higher rates of unemployment than previously seen either among older veterans or the general population, even as the economy has improved following the recent recession; and

Whereas, For February 2014, the unemployment rate for veterans that have served since September 11, 2001, commonly referred to as post-9/11 or recent veterans, was 9.2 percent, compared to the general civilian unemployment rate of 6.3 percent; and

Whereas, During 2013, the average unemployment rate for post-9/11 veterans for the year was 9.1 percent, significantly higher than the average rate of 6.7 percent for all veterans and 7.4 percent for the general population; and

Whereas, In a survey of recent veterans, nearly 70 percent cited finding employment as their biggest challenge; and

Whereas, Many veterans report having difficulty translating their military experience and skills to terms more commonly used by civilian employers, while others have struggled in the job market due to the fact that they began looking for work during a serious recession; and

Whereas, The federal government previously offered tax credits to employers that hired unemployed veterans under the Work Opportunity Tax Credit program, but the program has not been renewed; and

Whereas, In January 2013, New York State Senator Mark Grisanti and Assembly Member Fred Thiele, Jr. introduced S.1707 and A.4098, bills that would provide New York companies with a financial incentive to hire veterans by offering such businesses tax credits in return for employing those who have served our country in the United States military; and

Whereas, S.1707 and A.4098 would provide a tax credit of $3,000 per veteran hired or $4,000 for every disabled veteran hired; now, therefore, be it

Resolved, That the Council of the City of New York calls upon the New York State Legislature to pass, and the Governor to sign S.1707 and A.4098, legislation establishing a veterans tax credit for businesses that hire veterans and disabled veterans.

Referred to the Committee on Veterans.

Int. No. 229

By Council Members Vacca, Barron, Constantinides and Mendez.

A Local Law to amend the administrative code of the city of New York, in relation to requiring the display of likenesses of missing children in taxis and HAIL vehicles.

Be it enacted by the Council as follows:

Section 1. Chapter 5 of title 19 of the administrative code of the city of New York is amended by adding a new section 19-540 to read as follows:

§19-540 Display of likenesses of missing children. a. Upon request of the police department, all taxis and HAIL vehicles that contain a mechanism to display moving images shall display likenesses of missing children and any accompanying information as provided by the police department on such mechanism for the length of time requested by the police department.

b. A violation of this section shall subject the owner of such vehicle to a civil penalty of not less than nor more than fifty dollars provided that not more than one violation may be issued within a twenty-four hour period.

c. It shall be an affirmative defense to a violation of this section that the mechanism to display moving images was not operational at the time that the request by the police department was made, and that the owner of such vehicle abided by the rules applicable to such mechanism's lack of operation as set forth by the commission and this code; provided however, that such mechanism shall display such likenesses and accompanying information as provided for by this section when the operation of such mechanism resumes.

§2. This local law shall take effect immediately.

Referred to the Committee on Transportation.

Int. No. 230

By Council Members Vacca, Koo, Mendez and Richards.

A Local Law to amend the New York city charter, in relation to vehicle idling restrictions.

Be it enacted by the Council as follows:

Section 1. Section 24-163 of the administrative code of the city of New York is amended to read as follows:

§24-163 Operation of motor vehicle; idling of engine restricted. (a) [No] *Definitions. When used in this section:*

(1) "Bus" shall have the same meaning as set forth in section one hundred four of the vehicle and traffic law.

(2) "Loading and unloading" means the activity of passengers boarding or exiting a bus.

(3) "Loading and unloading device" means a device used to move goods or people on or off of a vehicle.

(4) "Processing device" means a device necessary to operate an engine-powered refrigeration system designed to control the environment of temperature sensitive cargo, including but not limited to food. Processing device shall also mean a device necessary to accomplish the work, other than transporting goods, for which the vehicle or equipment was designed, including, but not limited to: operating a lift, crane, pump, drill, hoist, mixer or other auxiliary equipment other than a heater or air conditioner.

(5) "School bus depot" means any garage, lot or other facility where buses that transport children to or from schools are parked overnight.

(6) "Multiple use bus terminal point" means a location that is both a terminal point of at least one bus route, other than a school bus route, and at least one bus stop, other than a school bus stop, on a different bus route.

(b) (1) Except as provided in this subdivision or subdivisions (f) or (g) of this section, no person shall cause or permit the engine of a motor vehicle, other than a legally authorized emergency motor vehicle, to idle for longer than three minutes, [except as provided in subdivision (f) of this section,] while parking as defined in section one hundred twenty-nine of the vehicle and traffic law, standing as defined in section one hundred forty-five of the vehicle and traffic law, or stopping as defined in section one hundred forty-seven of the vehicle and traffic law, unless the engine is *being* used to *actively* operate a loading[,] *and* unloading *device* or processing device. [When the ambient temperature is in excess of forty degrees Fahrenheit, no person shall cause or permit the engine of a bus as defined in section one hundred four of the vehicle and traffic law to idle while parking, standing, or stopping (as defined above) at any terminal point, whether or not enclosed, along an established route.

(b)] *(2) The prohibitions of this section shall not apply when a hybrid electric vehicle, as defined in section 86.1702-99 of title forty of the code of federal regulations, is idling for the purpose of providing energy for a battery or other form of energy storage recharging.*

(3) The prohibitions of this section shall not apply to electric powered vehicles.

(4) Buses are permitted to idle for five minutes in any thirty minute period in order to operate heating or air conditioning during active loading and unloading of passengers. Any diesel powered vehicle that does not move for more than two hours shall be allowed to idle up to fifteen minutes for every three hour period in which it remains stationary when the outside temperature is continuously below twenty-five degrees Fahrenheit.

(5) Any motor vehicle that has an independent refrigeration system that includes a compressor operating on diesel fuel shall not run such system longer than five minutes in a particular location.

(c) The department of transportation shall post signs relating to prohibited idling that shall comply with the standards set forth in the Manual on Uniform Traffic Control Devices and, where practicable, include the maximum penalty that may be imposed for a violation of subdivision [a] *(b)* of this section as follows:

(1) a sign shall be posted at each exit within the city of New York of each bridge and tunnel having only one terminus in the city of New York;

(2) signs shall be posted at a minimum of five locations in each borough where two or more truck routes, whether local or through routes, intersect;

(3) a sign shall be posted at each bus layover area (other than school bus layover areas), designated by the commissioner of transportation pursuant to section 4-10(c)(3) of title 34 of the rules of the city of New York, *or any successor rule*;

(4) a sign shall be posted at each multiple use bus terminal point;

(5) a sign shall be posted in close proximity to each school bus depot; and,

(6) signs shall be posted at other appropriate locations throughout the city as jointly determined by the commissioner and the commissioner of transportation, including but not limited to, locations for which the city receives a substantial number of complaints of idling motor vehicles.

[(c) For the purpose of this section only the term "school bus depot" shall mean any garage, lot or other facility where buses that transport children to or from schools are parked over night and the term "multiple use bus terminal point" shall mean a location that is both a terminal point of at least one bus route (other than a school bus route) and a bus stop (other than a school bus stop) on one or more other bus routes.]

(d) In any proceeding relating to a violation of the restrictions on idling it shall not be a defense that a sign required by this section was absent at the time of the violation.

(e) In addition to the department and the police department, the department of parks and recreation and the department of sanitation shall have the authority to enforce subdivision [a] *(b)* of this section and shall have the power to issues summonses, appearance tickets and/or notices of violation for violations of such subdivision.

(f) No person shall cause or permit the engine of a motor vehicle, other than a legally authorized emergency motor vehicle, to idle for longer than one minute if such motor vehicle is adjacent, as determined by rule, *to any public park or* to any public school under the jurisdiction of the New York city department of education or to any non-public school that provides educational instruction to students in any grade from pre-kindergarten to the twelfth grade level, while parking as defined in section one hundred twenty-nine of the vehicle and traffic law, standing as defined in section one hundred forty-five of the vehicle and traffic law, or stopping as defined in section one hundred forty-seven of the vehicle and traffic law, unless the engine is used to operate a loading, unloading or processing device, and provided that idling of an engine of a school bus may be permitted to the extent necessary: (1) for mechanical work; (2) to maintain an appropriate temperature for passenger comfort; or (3) in emergency evacuations where necessary to operate wheelchair lifts. It shall be an affirmative defense that any such school was not easily identifiable as a school by signage or otherwise at the time a violation of this subdivision occurred.

(g) *Service vehicles operated by a gas or electric company or by a city or state agency or the port authority of New York and New Jersey are permitted to idle in order to operate traffic control signals during street work.*

(h) A report shall be submitted to the city council on an annual basis by: (1) the environmental control board that states the number of notices of violation issued for engine idling violations returnable to the environmental control board, including the total amount of penalties imposed for such notices of violations; and (2) the department of finance that states the number of summonses issued for engine idling violations pursuant to subdivision (p) of section 4-08 of title 34 of the rules of the city of New York, *or any successor rule*, including the total amount of penalties imposed for such summonses.

§ 2. This local law shall take effect ninety days after its enactment.

Referred to the Committee on Environmental Protection.

Int. No. 231

By Council Members Vacca, Gentile, Koo, Mendez and Wills.

A Local Law to amend the administrative code of the city of New York, in relation to notifying sidewalk construction permit applicants if there will be a new tree planting during the next tree planting season.

Be it enacted by the Council as follows:

Section 1. Chapter one of title 18 of the administrative code of the city of New York is amended by adding a new section 18-106.1 to read as follows:

§ 18-106.1 Tree planting; notification to the department of transportation. a. For the purposes of this section "tree planting season" shall mean the months of March through May and October through December, or any other time period which the department designates for tree plantings.

b. The department shall inform the department of transportation of the locations of any tree plantings planned for the immediately subsequent tree planting season not more than seven days following the selection of any such location.

§2. Subchapter one of chapter one of title 19 of the administrative code of the city of New York is amended by adding a new section 19-156 to read as follows:

§ 19-156 Notification of tree planting when applying for sidewalk construction permits. a. For the purposes of this section "tree planting season" shall mean the months of March through May and October through December, or any other time period which the department of parks and recreation designates for tree plantings.

b. The department shall notify the applicant upon the filing of an application for a sidewalk construction permit if there will be a tree planting on such sidewalk during the next tree planting season to the extent the department has received such information.

§3. This local law shall take effect immediately.

Referred to the Committee on Transportation.

Int. No. 232

By Council Members Vacca, Barron, Chin, Koo, Mendez and Rosenthal.

A Local Law to amend the administrative code of the city of New York, in relation to requiring all street hail livery vehicles be accessible to those with visual impairments.

Be it enacted by the Council as follows:

Section 1. Section 19-538 of the administrative code of the city of New York is amended to read as follows:

§ 19-538 Vision impairment accessibility requirements. a. For the purposes of this section, "accessible to people with vision impairments" shall mean a taxicab *or HAIL vehicle* that is equipped with instructions for contacting the commission in Braille and large-print text and if such taxicab *or HAIL vehicle* has payment technology [installed], such technology must provide a payment option to permit visually impaired passengers to pay unassisted. Such payment option shall have audio instruction and shall have audible announcements of the initial charge, the fare periodically during the trip, at the end of the trip, and when there is a rate code change and/or toll charge, in such manner as provided for and adopted by the commission. *If such payment technology is not installed in a taxicab or HAIL vehicle, then no payment technology shall be placed into a taxicab or HAIL vehicle unless the commission has consulted with advocates for and members of the visually impaired community regarding such technology.*

b. Commencing May 1, 2013, all taxicabs must be accessible to people with vision impairments. *Commencing January 1, 2015, all HAIL vehicles must be accessible to people with vision impairments.* The instructions about contacting the commission described in subdivision a of this section shall be on the same side and in the same passenger compartment in each taxicab *or HAIL vehicle*, and the payment technology described in subdivision a of this section *if installed in a taxicab or HAIL vehicle* shall be in the same passenger compartment in each *such* taxicab *or HAIL vehicle*.

c. The commission may by rule establish greater levels of accessibility for taxicabs *or HAIL vehicles* than those required by this section.

§ 2. This local law shall take effect immediately.

Referred to the Committee on Transportation.

Res. No. 144

Resolution calling upon the New York State Legislature to pass, and the Governor to sign, legislation that would make a violation of Hayley and Diego's Law a misdemeanor.

By Council Members Vacca and Mendez.

Whereas, In 2010, the New York State Legislature passed, and the Governor signed, Hayley and Diego's Law, which makes it a traffic infraction for a driver to injure a pedestrian or bicyclist while failing to "exercise due care"; and

Whereas, A violation of Hayley and Diego's Law is punishable by a fine of up to $500 (or up to $750 if the driver causes "serious physical injury") or by imprisonment for up to 15 days or by both such fine and imprisonment; and

Whereas, Hayley and Diego's Law is named after two children who were killed in 2009 in Chinatown in Manhattan when a delivery van that had been left idling and in reverse climbed the curb and hit them; and

Whereas, The driver in question was not charged with any infraction resulting from the children's deaths; and

Whereas, Enforcement of Hayley and Diego's Law has been limited because a police officer needs to witness a traffic infraction in order to issue a summons or make an arrest; and

Whereas, Making violation of Hayley and Diego's Law a misdemeanor would increase the penalties associated with carelessly harming a pedestrian or bicyclist; and

Whereas, The change would also make enforcement easier by allowing a police officer to issue a summons for failing to exercise due care and injuring someone based upon probable cause, even if the officer was not present to witness the crash; and

Whereas, In the interest of enhancing pedestrian and bicyclist safety, a violation of Hayley and Diego's Law should be a misdemeanor; now, therefore, be it

Resolved, That the Council of the City of New York calls upon the New York State Legislature to pass, and the Governor to sign, legislation that would make a violation of Hayley and Diego's Law a misdemeanor.

Referred to the Committee on Transportation.

Res. No. 145

Resolution calling upon the New York State Legislature to introduce and pass and the Governor to sign a law, which would allow the City of New York to use Design-Build contracts for construction projects.

By Council Members Vacca and Levin.

Whereas, In Fiscal Year 2013 the City of New York spent $2.8 billion on construction projects; and

Whereas, According to a March 2014 report by the Center for an Urban Future entitled, "Caution Ahead: Overdue Investments for New York's Aging Infrastructure," New York City has the highest construction costs in the United States, and those costs have risen 33% more than the rate of inflation over the last decade; and

Whereas, The current process by which construction projects are contracted for in the City requires firms to create a design, submit it to the City as a bid, and if the bid meets the project specifications and is the lowest price, the firm is awarded the contract and then works with the builder to build the design; and

Whereas, Furthermore, this methodology often result in bids that do not fully consider the costs and challenges of maintaining the construction project once it is built, thereby increasing the risk that the project will either fail or the costs will significantly increase; and

Whereas, An alternative model is for the designer and construction firms to jointly submit design bids so that the construction firm is fully engaged in the project at the outset, ensuring its expertise is incorporated into the design of the project; and

Whereas, In 2011, New York State passed a law that allowed certain State authorities to use design-build contracts, but did not give that option to municipalities; now, therefore, be it

Resolved, That the Council of the City of New York calls upon the New York State Legislature to introduce and pass and the Governor to sign a law, which would allow the City of New York to use Design-Build contracts for construction projects.

Referred to the Committee on Contracts.

Int. No. 233

By Council Members Vallone, Constantinides, Koo and Ulrich.

A Local Law to amend the administrative code of the city of New York, in relation to veteran identification cards.

Be it enacted by the Council as follows:

Section 1. Subchapter 3 of chapter 1 of title 3 of the administrative code of the city of New York is amended by adding a new section 3-132 to read as follows:

§ 3-132 Veteran identification cards. a. For the purposes of this section, the following definitions shall apply:

1. "Administering agency" shall mean any city agency, office, department, division, bureau or institution of government, the expenses of which are paid in whole or in part from the city treasury, as the mayor shall designate.

2. "Qualified applicant" shall mean any veteran who seeks to obtain a veteran identification card as authorized by this chapter and who has met all requisite qualifications and provided all relevant documentation for the issuance of a veteran identification card as provided by this section.

3. "Veteran" shall mean a person who has served in the active duty military of the United States and who has been released from such service otherwise than by dishonorable discharge.

b. The administering agency shall establish, produce and issue a veteran identification card to all qualified applicants. Such card shall display the name, signature and photograph of such applicant and indicate that the card was issued to a veteran.

c. In order to obtain a veteran identification card, an applicant shall complete an application requiring proof of such applicant's identity and veteran status, as well as any other information deemed necessary by the administering agency. The administering agency shall prescribe the form of such application, as well as the acceptable proofs of identity and veteran status.

d. All information obtained from applications received shall be maintained in a database maintained by the department. Such database shall not be available for public examination.

e. Prior to distribution of any veteran identification card, the administering agency may charge a qualified applicant a fee. Such fee shall not exceed the administrative costs reasonably associated with the production of such card.

§ 2. This local law shall take effect ninety days after it shall have been enacted into law.

Referred to the Committee on Veterans.

Res. No. 146

Resolution calling upon the New York State Legislature to pass and the Governor to sign S.6570/A.8742, requiring all textbooks to also refer to the Sea of Japan as the East Sea.

By Council Members Vallone and Koo.

Whereas, There has been a longstanding debate between Japan and Korea regarding the name of the body of water located between the Japanese archipelago and the Korean peninsula; and

Whereas, Japan refers to that body of water as the "Sea of Japan," while Korea recognizes it as the "East Sea"; and

Whereas, Whereas, According to the Ministry of Foreign Affairs of Japan, the name Sea of Japan had been geographically and historically established since the late 18th to early 19th century and is currently used in most countries all over the world; and

Whereas, The Ministry of Foreign Affairs of Japan also stated that more than 97% of maps used throughout the world display the name Sea of Japan; and

Whereas, Korean advocates argue that the name Sea of Japan was standardized worldwide while Korea was under Japanese colonial rule, after the International Hydrographic Organization (IHO) published its definitive "Limits of the Oceans and the Seas" in 1929, according to *Reuters*; and

Whereas, In response to the name dispute, the National Geographic Society in Washington, DC, began including the term East Sea in parentheses following any reference to the Sea of Japan in its maps in 1999; and

Whereas, On February 6, 2014, the Virginia State Legislature passed a bill that requires all new textbooks to also refer to the Sea of Japan as the East Sea, which is expected to be signed into law by Governor Terry McAuliffe; and

Whereas, Similar legislation is currently being considered in the states of New Jersey and New York; and

Whereas, According to *U.S. News and World Report*, a bill was recently introduced in New Jersey that would require the body of water to be called the East Sea for all governmental purposes, although it does not require the term to be used in school textbooks; and

Whereas, In New York, S.6570, sponsored by State Senator Stavisky, and A.8742, sponsored by Assembly Member Braunstein, would amend the Education Law, requiring all textbooks in the State to reference the Sea of Japan as also the East Sea; and

Whereas, This bill would align New York's textbooks with a growing, international movement to recognize both names as acceptable; now, therefore, be it

Resolved, That the Council of the City of New York calls upon the New York State Legislature to pass and the Governor to sign S.6570/A.8742, requiring all textbooks to also refer to the Sea of Japan as the East Sea.

Referred to the Committee on Education.

Res. No. 147

Resolution in support of A.8587/S.6386, which would amend the New York State Penal Law by increasing the penalties for drivers who cause serious physical injury or death to another person while knowingly operating a motor vehicle without a license or with a revoked or suspended license.

By Council Members Vallone, Crowley, Gentile and Koslowitz.

Whereas, Dangerous drivers whose reckless behavior results in serious physical injuries and fatalities are a serious concern in the nation, the State and New York City; and

Whereas, Of particular concern are those offenders who continue to put the public at risk by driving without obtaining a license, or who have had their license suspended or revoked; and

Whereas, According to the New York City Police Department's preliminary data, a total of 203,390 motor vehicle collisions occurred in New York City during 2013; and

Whereas, In 2013, 286 people, including 168 pedestrians and 11 cyclists, were killed in traffic crashes in New York City, a 24 percent increase in pedestrians killed compared to 2012; and

Whereas, In New York City there were over 16,000 pedestrian and cyclist injuries in 2013 and more than 54,000 total traffic-related injuries; and

Whereas, According to the AAA Foundation for Traffic Safety, drivers who have a suspended or revoked license are 3.7 times more likely to be involved in a fatal crash than are validly licensed drivers, while unlicensed drivers are 4.9 times more likely to be involved in a fatal accident; and

Whereas, The *New York Times* reported that Angela Hurtado was killed on January 18, 2014 when she was struck by a vehicle as she crossed Grand Avenue in Queens, and the driver of that vehicle, Abel Tinoco, 28, was charged with a misdemeanor for driving with a suspended license; and

Whereas, In another reported motor vehicle accident that took place on December 31, 2013 in Flushing, Queens, a 24 year-old driver, whose license had been suspended nine times, crashed into a car, killing the driver, Annamarie Tromp; and

Whereas, Current State law fails to sufficiently punish those drivers who are unlicensed or who drive with suspended or revoked licenses and cause serious injury or death; and

Whereas, A.8587, sponsored by Assembly Member Margaret Markey, and companion bill, S.6386, sponsored by Senator Michael Gianaris, currently pending in the New York State Assembly and Senate, respectively, would protect New Yorkers from individuals who should not be on our roads; and

Whereas, A.8587/S.6386 would amend the Penal Law by including, within the offense of vehicular assault in the second degree, those drivers who cause serious physical injury or death to another person while operating a motor vehicle, knowing or having reason to know that their privilege to drive was suspended or revoked, or that they are unlicensed; and

Whereas, A driver convicted of vehicular assault in the second degree, a class E felony, would face a prison sentence of up to four years; and

Whereas, It is imperative to help ensure the safety and well-being of those who use New York's roadways; now, therefore, be it

Resolved, That the Council of the City of New York supports A.8587/S.6386, which would amend the New York State Penal Law by increasing the penalties for drivers who cause serious physical injury or death to another person while knowingly operating a motor vehicle without a license or with a revoked or suspended license.

Referred to the Committee on Public Safety.

Int. No. 234

By Council Members Van Bramer, Constantinides and Johnson.

A Local Law to amend the administrative code of the city of New York in relation to an invasive species advisory board.

Be it enacted by the Council as follows:

Section 1. Chapter 1 of title 18 of the administrative code of the city of New York is amended by adding new section 18-107.1 to read as follows:

§18-107.1 Control of invasive plant species. a. There shall be established an invasive species advisory board which shall consist of eleven members who shall include the commissioner of parks and recreation or a designee, the commissioner of environmental protection or a designee, the commissioner of transportation or a designee, the director of the department of city planning or a designee, the director of the office of long term planning and sustainability, and six public members including a representative from the New York city soil and water conservation district, a specialist in terrestrial invasive species, two representatives of environmental advocacy organizations, and two representatives from the nursery industry. Representatives from the Brooklyn botanic garden, the New York botanical garden, the nature conservancy, the New York state department of environmental conservation, the United States fish and wildlife service and the United States department of agriculture shall be invited to participate but shall not be members of the advisory board. The speaker of the New York city council and the mayor shall jointly make the public members appointments.

b. The invasive species advisory board shall hold its first meeting no later than thirty days from the appointment of all its public members and at such meeting shall elect a chairperson and a secretary from its members. The advisory board shall meet at least quarterly, keep a record of its proceedings, and determine the rules of its own proceedings with special meetings to be called by the chairperson upon his or her own initiative or upon receipt of a written request signed by at least four members of the board. Written notice of the time and place of such special meetings shall be given by the secretary to each member at least two weeks before the date fixed by the notice for such special meeting.

c. The invasive species advisory board may conduct such hearings and meetings at any place or places within the city designated by the board for the purpose of obtaining necessary information or other data to assist it in the proper performance of its duties and functions as it deems necessary.

d. The invasive species advisory board shall expire, and the terms of office of its members shall terminate three years from the date that all of its public members have been appointed.

e. No later than two years from its first meeting the invasive species advisory board shall submit a written report of its findings and determinations together with its recommendations for action, to the mayor and the speaker of the council. Such report may include a list of invasive species for which the boards recommends a prohibition on the import, sale, purchase, and/or possession in the city of New York.

f. Duties of the invasive species advisory board. The invasive species advisory board shall develop recommendations for: (1) a control policy designed to eradicate, suppress, reduce or manage invasive plant species populations, including preventing the spread of invasive species where they are present, including the restoration of native species or habitats; (2) detecting and responding rapidly to and controlling populations of invasive species in a cost-effective and environmentally sound manner; (3) enhancing monitoring of invasive species populations accurately and reliably; (4) restoring native species and habitat conditions in ecosystems that have been invaded and conducting research on invasive species and detection protocols to prevent introduction; (5) making taxonomic information more readily available to the public and promoting public education on invasive species control. The invasive species advisory board shall also work to foster greater coordination between agencies and the public, examine existing staff and funding resources needed to implement the proposed program and recommend ways to close any potential staff or funding gaps which could impede implementation.

§2. This local law shall take effect immediately.

Referred to the Committee on Environmental Protection.

Int. No. 235

By Council Member Van Bramer.

A Local Law in relation to renaming two thoroughfares and public places in the Borough of Queens, Court Square East and Court Square West, and to amend the official map of the city of New York accordingly.

Be it enacted by the Council as follows:

Section 1. The following street name, in the Borough of Queens, is hereby renamed as hereafter indicated.

New Name	Present Name	Limits
Court Square East	Court Square	Between Thomson Avenue and the Sunnyside Rail Yards

§2. The following street name, in the Borough of Queens, is hereby renamed as hereafter indicated.

New Name	Present Name	Limits
Court Square West	Court Square	Between Jackson Avenue and the Sunnyside Rail Yards

§3. The official map of the city of New York shall be amended in accordance with the provisions of sections one and two of this local law.

§4. This local law shall take effect immediately.

Referred to the Committee on Parks and Recreation.

Int. No. 236

By Council Members Van Bramer, Constantinides, Gentile and Levine.

A Local Law to amend the administrative code of the city of New York, in relation to requiring signage as to the location of libraries.

Be it enacted by the Council as follows:

Section 1. Subchapter two of chapter one of title 19 of the administrative code of the city of New York is amended by adding a new section 19-175.5 to read as follows:

§19-175.5 Library Signage. The department shall post signage at prominent locations within a five block radius of public libraries that indicates the location of such public libraries.

§2. This local law shall take effect ninety days after its enactment into law.

Referred to the Committee on Transportation.

Int. No. 237

By Council Members Van Bramer, Chin and Mendez.

A Local Law to amend the administrative code of the city of New York, in relation to requiring all children with an individualized education program to be transported in buses with air-conditioning.

Be it enacted by the Council as follows:

Section 1. Subdivision a of section 19-605 of the administrative code of the city of New York is amended to read as follows:

a. Any bus or other motor vehicle transporting a child with a disability to and from a school in the city pursuant to any agreement or contract shall be air-conditioned when the ambient outside temperature exceeds seventy degrees Fahrenheit. Drivers of all such vehicles shall utilize such air conditioning systems in order to make the internal climate of such vehicles comfortable to passengers in order to protect or enhance the health of children with disabilities. Any failure, mechanical or otherwise, of an air-conditioning system required by this section shall be repaired and restored to operable condition as soon as is practicable, but in no event more than three business days subsequent to the failure. For purposes of this section, "child with a disability" shall mean a child with a disability as defined in section 4401(1) of the education law [who requires an air-conditioned environment for health reasons].

§2. This local law shall take effect ninety days after it is enacted into law.

Referred to the Committee on Education.

Res. No. 148

Resolution calling on the Metropolitan Transportation Authority to install soundproofing systems near schools where subway and train noise reach disruptive decibel levels.

By Council Members Van Bramer, Barron, Cabrera, Chin, Constantinides, Levine and Vallone.

Whereas, The Metropolitan Transportation Authority ("MTA") has over 600 miles of subway tracks, and operates 6,000 subway cars that serve 468 subway stations; and

Whereas, A large portion of the MTA's track infrastructure is above ground, running through many commercial and residential areas; and

Whereas, While New York City arguably has one of the largest and most efficient subway systems in the world, the largely above-ground system poses many problems for City residents; and

Whereas, In particular, subway noise has become a concern to many parents; and

Whereas, According to one media report, a public school in Queens that is located near an elevated train registered decibel levels in the high 90s; and

Whereas, According to the National Institutes of Health, prolonged exposure to noise levels of 85 decibels or higher may lead to hearing loss; and

Whereas, The New York City Department of Health recently launched a campaign to educate City residents about the negative effects of headphone use; and

Whereas, In Seattle, Washington, the local transit authority began work in 2013 to soundproof a portion of its light rail system that runs close to a residential neighborhood due to concerns about noise levels; and

Whereas, The MTA, in conjunction with other relevant City and State agencies, should begin studying ways to soundproof subway tracks located near public schools; now, therefore, be it

Resolved, That the Council of the City of New York calls upon the Metropolitan Transportation Authority to install soundproofing systems near schools where subway and train noise reach disruptive decibel levels.

Referred to the Committee on Transportation.

Int. No. 238

By Council Members Weprin, Rodriguez and Levine.

A Local Law to amend the administrative code of the city of New York, in relation to the right of way of pedestrians and bicyclists.

Be it enacted by the Council as follows:

Section 1. Subchapter 3 of chapter 1 of title 19 of the administrative code of the city of New York is amended by adding a new section 19-190 to read as follows:

§19-190 Right of way. a. Except as provided in subdivision b of this section, any driver of a motor vehicle who interferes with the right of way of a pedestrian by failing to yield to a pedestrian lawfully in a marked crosswalk or otherwise lawfully crossing a street or by failing to yield to a bicyclist lawfully riding a bicycle shall be guilty of a traffic infraction, which shall be punishable by a fine of not more than fifty dollars or by not more than fifteen days in jail or both such fine and imprisonment. In addition to or as an alternative to such penalty, such driver shall be subject to a civil penalty recoverable at the environmental control board of not more than two hundred fifty dollars. For purposes of this section, "motor vehicle" shall have the same meaning as in section one hundred twenty five of the vehicle and traffic law.

b. Any driver of a motor vehicle who interferes with the right of way of a pedestrian by making contact with a pedestrian who is lawfully in a marked crosswalk or otherwise lawfully crossing the street, or by making contact with a pedestrian on the sidewalk, shall be guilty of a misdemeanor, which shall be punishable by a fine of not more than two hundred fifty dollars, or imprisonment of not more than thirty days in jail or both such fine and imprisonment. In addition to or as an alternative to such penalty, such driver shall also be subject to a civil penalty recoverable at the environmental control board of not more than two hundred fifty dollars.

c. It shall be a defense to subdivision b of this section that the actions or inactions of the driver of such motorized vehicle were not a proximate cause of the contact that occurred.

§2. This local law shall take effect sixty days following enactment into law.

Referred to the Committee on Transportation.

Res. No. 149

Resolution calling on the New York City Department of Education to require that all public school students receive age-differentiated anti-bullying instruction and complete an anti-bullying course focused especially on cyberbullying.

By Council Members Weprin, Barron, Chin, Gibson, Levine, Mendez, Richards, Vallone and Wills.

Whereas, Bullying is a serious and widespread problem in schools throughout the United States (U.S.); and

Whereas, A survey by the U.S. Departments of Education and Justice found that about 28% of students ages 12–18 reported being bullied at school in 2011; and

Whereas, Cyberbullying is bullying that takes place using electronic technology such as cell phone texting, email and social media internet sites and is a growing problem in U.S. schools; and

Whereas, Data collected by the National Center for Education Statistics and Bureau of Justice Statistics indicates that 6% of students in grades 6–12 experienced cyberbullying in 2008–2009; and

Whereas, By 2011, 16% of high school students (grades 9-12) were electronically bullied according to the Youth Risk Behavior Surveillance Survey conducted by the Centers for Disease Control and Prevention; and

Whereas, Bullying has a negative impact on student attendance, academic outcomes and psychological well-being; and

Whereas, Students who are bullied or cyberbullied are more likely to skip a class or miss days of school, receive poor grades, experience depression, have lower self-esteem, use alcohol and drugs, and have more health problems; and

Whereas, Bullying prevention has received increasing focus from educators and policymakers in recent years, as evidenced by annual bullying prevention summits hosted by the U.S. Department of Education and similar events held in individual states; and

Whereas, New York State enacted its own anti-bullying law, the "Dignity for All Students Act" (DASA), in September 2010, which took effect on July 1, 2012; and

Whereas, The goal of DASA is to provide the State's public school students with a safe and supportive environment free from discrimination, harassment, and bullying; and

Whereas, DASA also amended Section 801-a of New York State Education Law which requires that the course of instruction in grades kindergarten through twelve include a component on civility, citizenship and character education; and

Whereas, Such component shall instruct students on the principles of honesty, tolerance, personal responsibility, respect for others, with an emphasis on discouraging acts of harassment, bullying and discrimination; and

Whereas, Further, such component must include instruction in the safe and responsible use of the internet and electronic communications; and

Whereas, The New York City Department of Education (DOE), in collaboration with the City Council and advocates, launched the citywide Respect For All initiative in 2007 to combat bias-based bullying and harassment in schools; and

Whereas, The Respect For All initiative includes staff training and curriculum for students in secondary schools; and

Whereas, In addition, DOE's Chancellor's Regulation A-832 establishes a procedure for the filing, investigation, and resolution of complaints of student-to-student bias-based harassment, intimidation, and/or bullying; and

Whereas, Chancellor's Regulation A-832 requires principals to ensure that students have been provided with information and training on the policy and procedures in this Regulation by October 31st of each year; and

Whereas, However, Chancellor's Regulation A-832 does not mandate comprehensive anti-bullying and cyberbullying instruction for all students; and

Whereas, Such instruction would assist in the prevention of bullying, harassment and violence, enabling schools to better maintain supportive learning environments; and

Whereas, Students deserve to learn in a safe space that encourages positive learning conditions and increases academic achievement for all students; now, therefore, be it

Resolved, That the Council of the City of New York calls upon the New York City Department of Education to require that all public school students receive age-differentiated anti-bullying instruction and complete an anti-bullying course focused especially on cyberbullying.

Referred to the Committee on Education.

Int. No. 239

By Council Members Williams and Johnson.

A Local Law to amend the New York city charter and the administrative code of the city of New York, in relation to the provision of vacation leave and employment.

Be it enacted by the Council as follows:

Section 1. Subdivision (e) of section 2203 of the New York city charter, as added by local law number 46 for the year 2013, is hereby amended to read as follows:

(e) The commissioner shall have all powers as set forth in [chapter] *chapters* 8 *and 9* of title 20 of the administrative code relating to the receipt, investigation, and resolution of complaints thereunder regarding earned sick time *and paid vacation leave*, and the power to conduct investigations regarding violations of such chapter upon his or her own initiative.

§ 2. Paragraph (1) of subdivision (h) of section 2203 of the New York city charter, as relettered by local law number 46 for the year 2013, is hereby amended to read as follows:

(h)(1) Notwithstanding any inconsistent provision of law, the department shall be authorized, upon due notice and hearing, to impose civil penalties for the violation of any laws or rules the enforcement of which is within the jurisdiction of the department pursuant to this charter, the administrative code or any other general, special or local law. The department shall have the power to render decisions and orders and to impose civil penalties for all such violations, and to order equitable relief for and payment of monetary damages in connection with enforcement of [chapter] *chapters* 8 *and 9* of title 20 of the administrative code. Except to the extent that dollar limits are otherwise specifically provided, such civil penalties shall not exceed five hundred dollars for each violation. All proceedings authorized pursuant to this subdivision shall be conducted in accordance with rules promulgated by the commissioner. The remedies and penalties provided for in this subdivision shall be in addition to any other remedies or penalties provided for the enforcement of such provisions under any other law including, but not limited to, civil or criminal actions or proceedings.

§ 3. Title 20 of the administrative code of the city of New York is amended by adding a new chapter 9 to read as follows:

CHAPTER 9

RIGHT OF EMPLOYEES TO VACATION LEAVE

§ 20-930 ***Definitions.*** *When used in this chapter, the following terms shall be defined as follows:*

a. "Calendar year" shall mean a regular and consecutive twelve month period, as determined by an employer.

b. "Chain business" shall mean any employer that is part of a group of establishments that share a common owner or principal who owns at least thirty percent of each establishment where such establishments (i) engage in the same business or (ii) operate pursuant to franchise agreements with the same franchisor as defined in general business law section 681; provided that the total number of employees of all such establishments in such group is at least ten.

c. "Employee" shall mean any "employee" as defined in section 190(2) of the labor law who is employed for hire within the city of New York for more than eighty hours in a calendar year who performs work on a full-time or part-time basis, including work performed in a transitional jobs program pursuant to section 336-f of the social services law, but not including work performed as a participant in a work experience program pursuant to section 336-c of the social services law, and not including those who are employed by (i) the United States government; (ii) the state of New York, including any office, department, independent agency, authority, institution, association, society or other body of the state including the legislature and the judiciary; or (iii) the city of New York or any local government, municipality or county or any entity governed by general municipal law section 92 or county law section 207.

d. "Employer" shall mean any "employer" as defined in section 190(3) of the labor law, but not including (i) the United States government; (ii) the state of New York, including any office, department, independent agency, authority, institution, association, society or other body of the state including the legislature and the judiciary; or (iii) the city of New York or any local government, municipality or county or any entity governed by general municipal law section 92 or county law section 207.

e. "Paid vacation leave" shall mean paid leave from work for vacation, personal holiday, or paid leave for an absence from work approved by an employer.

f. "Retaliation" shall mean any threat, discipline, discharge, demotion, suspension, reduction in employee hours, or any other adverse employment action against any employee for exercising or attempting to exercise any right guaranteed under this chapter.

§ 20-931 ***Right to paid vacation leave; accrual.*** *a. All employees of employers with ten or more employees who work at least an average of twenty hours per week have the right to paid vacation leave pursuant to this chapter. In determining the number of employees performing work for an employer for compensation during a given week, all employees performing work for compensation on a full-time, part-time or temporary basis shall be counted, provided that where the number of employees who work for an employer for compensation per week fluctuates, business size may be determined for the current calendar year based upon the average number of employees who worked for compensation per week during the preceding calendar year, and provided further that in determining the number of employees performing work for an employer that is a chain business, the total number of employees in that group of establishments shall be counted.*

b. 1. An employee shall begin accruing paid vacation leave after working for the same employer for six months.

2. After the initial six-month period, employees are entitled to accrue leave in equal installments at every pay period while working for the employer, as follows:

i. Forty hours for the twelve-month period following the initial six-month period;

ii. Sixty hours for the twelve-month period beginning with the eighteenth month of employment;

iii. Eighty hours for each twelve-month period beginning after the thirtieth month of employment; and

iv. One hundred twenty hours for each twelve-month period beginning after the sixtieth month of employment.

3. For an employee who work more than twenty but less than forty hours per week, the number of vacation leave hours accrued shall be determined by taking the average number of hours per week such employee worked in the previous six months and reducing the accrual amounts in subparagraphs i.-iv. of paragraph 2 of subdivision b of this section by the same percentage that such employee worked less than forty hours per week.

c. Nothing in this chapter shall be construed to discourage or prohibit an employer from providing workers with a more generous vacation leave policy including, but not limited to, additional paid vacation leave.

d. An employer required to provide paid vacation leave pursuant to this chapter who provides an employee with an amount of paid leave, including, but not limited to, paid time off or paid personal days, sufficient to meet the requirements of subdivision b of this section and who allows such paid leave to be used for the same purposes and under the same conditions as paid vacation leave required pursuant to this chapter, is not required to provide additional paid vacation leave for such employee.

e. Employees who are not covered by the overtime requirements of New York state law or regulations, including the wage orders promulgated by the New York commissioner of labor pursuant to article 19 or 19-A of the labor law, shall be assumed to work forty hours in each work week for purposes of vacation leave accrual unless their regular work week is less than forty hours, in which case vacation leave accrues based upon that regular work week.

f. The provisions of this chapter do not apply to (i) work study programs under 42 U.S.C. section 2753, (ii) employees for the hours worked and compensated by or through qualified scholarships as defined in 26 U.S.C. section 117 and (iii) independent contractors who do not meet the definition of employee under section 190(2) of the labor law.

g. Unused vacation leave as provided pursuant to this chapter shall be carried over to the following calendar year, unless the employee is paid for any unused paid vacation leave at the end of the calendar year in which such leave was not used.

h. Nothing in this chapter shall be construed as requiring financial or other reimbursement to an employee from an employer upon the employee's termination, resignation, retirement or other separation from employment for paid vacation leave that has not been used.

i. If an employee is transferred to a separate division, entity or location in the city of New York, but remains employed by the same employer, such employee is entitled to all paid vacation leave accrued at the prior division, entity or location and is entitled to retain or use all vacation leave as provided pursuant to the provisions of this chapter.

j. When there is a separation from employment and the employee is rehired within six months of separation by the same employer, previously accrued vacation leave that was not used shall be reinstated and such employee shall be entitled to use such accrued vacation leave at any time after such employee is rehired, provided that no employer shall be required to reinstate vacation leave to the extent the employee was paid for unused accrued vacation leave prior to separation and the employee agreed to accept such pay for such unused vacation leave.

§ 20-932 ***Compensation for vacation leave; requests for leave****. a. An employer must compensate an employee who uses vacation leave at the same rate of pay and with the same benefits, including employer-provided healthcare benefits, as the employee would have earned during the time leave is taken, except that in no case shall the paid vacation leave hourly rates be less than the hourly rate provided in section 652(1) of the labor law.*

b. An employer may require reasonable notice for the use of vacation leave.

c. An employer shall not require an employee, as a condition of taking vacation leave, to search for or find a replacement worker to cover the hours during which such employee is utilizing vacation leave.

§ 20-933 ***Collective bargaining agreements****. The provisions of this chapter shall not apply to any employee covered by a valid collective bargaining agreement if (i) such provisions are expressly waived in such collective bargaining agreement and (ii) such agreement provides for a comparable benefit for the employees covered by such agreement in the form of paid days off; such paid days off shall be in the form of leave, compensation, other employee benefits, or some combination thereof. Comparable benefits shall include, but are not limited to, personal time, and holiday and Sunday time pay at premium rates.*

§ 20-934 ***Retaliation and interference prohibited****. No employer shall engage in retaliation or threaten retaliation against an employee for exercising or attempting to exercise any right provided pursuant to this chapter, or interfere with any investigation, proceeding or hearing pursuant to this chapter. The protections of this chapter shall apply to any person who mistakenly but in good faith alleges a violation of this chapter. Rights under this chapter shall include, but not be limited to, the right to request and use vacation leave, file a complaint for alleged violations of this chapter with the department, communicate with any person about any violation of this chapter, participate in any administrative or judicial action regarding an alleged violation of this chapter, or inform any person of his or her potential rights under this chapter.*

§ 20-935 ***Notice of rights****. a. An employer shall provide any new employee at the commencement of employment or any existing employee within thirty days of the effective date of this local law, with written notice of such employee's right to*

vacation leave pursuant to this chapter, including the accrual and use of vacation leave, the calendar year of the employer, and the right to be free from retaliation and to bring a complaint to the department. Such notice shall be in English and the primary language spoken by that employee, provided that the department has made available a translation of such notice in such language pursuant to subdivision b of this section. Instead of providing each employee with such notice, an employer may instead conspicuously post such notice at such employer's place of business in an area accessible to employees.

b. The department shall create and make available notices that contain the information required pursuant to subdivision a of this section and such notices shall allow for the employer to fill in applicable dates for such employer's calendar year. Such notices shall be posted in a downloadable format on the department's website in Chinese, English, French-Creole, Italian, Korean, Russian, Spanish and any other language deemed appropriate by the department.

c. Any person or entity that willfully violates the notice requirements of this section shall be subject to a civil fine in an amount not to exceed fifty dollars for each employee who was not given appropriate notice pursuant to this section.

§ 20-936 ***Employer records.*** *An employer shall retain records documenting such employer's compliance with the requirements of this chapter for a period of three years unless otherwise required pursuant to any other law, rule or regulation, and shall allow the department to access such records, with appropriate notice and at a mutually agreeable time of day, in furtherance of an investigation conducted pursuant to this chapter.*

§ 20-937 ***Other legal requirements****. a. This chapter provides minimum requirements pertaining to vacation leave and shall not be construed to preempt, limit or otherwise affect the applicability of any other law, regulation, rule, requirement, policy or standard that provides for greater accrual or use by employees of paid vacation leave or otherwise extends protections to employees.*

b. Nothing in this chapter shall be construed as creating or imposing any requirement in conflict with any federal or state law, rule or regulation, nor shall anything in this chapter be construed to diminish or impair the rights of an employee or employer under any valid collective bargaining agreement.

§ 20-938 ***Enforcement and penalties****. a. The department shall enforce the provisions of this chapter. In effectuating such enforcement, the department shall establish a system utilizing multiple means of communication to receive complaints regarding non-compliance with this chapter and investigate complaints received by the department in a timely manner.*

b. Any person alleging a violation of this chapter shall have the right to file a complaint with the department within two years of the date the person knew or should have known of the alleged violation. The department shall maintain confidential the identity of any complainant unless disclosure of such complainant's identity is necessary for resolution of the investigation or otherwise required by law. The department shall, to the extent practicable, notify such complainant that the department will be disclosing his or her identity prior to such disclosure.

c. Upon receiving a complaint alleging a violation of this chapter, the department shall investigate such complaint and attempt to resolve it through mediation. The department shall keep complainants reasonably notified regarding the status of their complaint and any resultant investigation. If the department believes that a violation has occurred, it shall issue to the offending person or entity a notice of violation. The commissioner shall prescribe the form and wording of such notices of violation. The notice of violation shall be returnable to the administrative tribunal authorized to adjudicate violations of this chapter.

d. The department shall have the power to impose penalties provided for in this chapter and to grant an employee or former employee all appropriate relief. Such relief shall include: (i) for each instance of vacation leave taken by an employee but unlawfully not compensated by the employer: three times the wages that should have been paid under this chapter or two hundred fifty dollars, whichever is greater; (ii) for each instance of vacation leave requested by an employee but unlawfully denied by the employer and not taken by the employee or unlawfully conditioned upon searching for or finding a replacement worker, or for each instance an employer requires an employee to work additional hours without the mutual consent of such employer: five hundred dollars; (iii) for each instance of unlawful retaliation not including discharge from employment: full compensation including wages and benefits lost, five hundred dollars and equitable relief as appropriate; and (iv) for each instance of unlawful discharge from employment: full compensation including wages and benefits lost, two thousand five hundred dollars and equitable relief, including reinstatement, as appropriate.

e. Any entity or person found to be in violation of the provisions of sections 20-931, 20-932 or 20-934 of this chapter shall be liable for a civil penalty payable to the city not to exceed five hundred dollars for the first violation and, for subsequent violations that occur within two years of any previous violation, not to exceed seven hundred and fifty dollars for the second violation and not to exceed one thousand dollars for each succeeding violation.

f. The department shall annually report on its website the number and nature of the complaints received pursuant to this chapter, the results of investigations undertaken pursuant to this chapter, including the number of complaints not substantiated and the number of notices of violations issued, the number and nature of adjudications pursuant to this chapter, and the average time for a complaint to be resolved pursuant to this chapter.

§ 4. This local law shall take effect 120 days after its enactment and the commissioner shall take such measures as are necessary for its implementation, including the promulgation of rules, prior to such effective date.

Referred to the Committee on Civil Service and Labor.

Int. No. 240

By Council Members Williams, Constantinides, Gentile, Koo and Mendez.

A Local Law to amend the administrative code of the city of New York, in relation to filing semi-annual reports on catch basin cleanup and maintenance.

Be it enacted by the Council as follows:

Section 1. Legislative findings and intent. The Council finds that maintenance of catch basins is an important function of storm water management and ultimately wastewater treatment in New York City. With more than 144,000 catch basins, inspection and maintenance is a formidable responsibility. The Department of Environmental Protection Bureau of Water and Sewer Operations are responsible for regularly inspecting catch basins. However it would be useful for the public to know how often the catch basins are inspected and cleaned, the number of complaints the department receives of clogged or malfunctioning catch basins and how long it takes for a complaint of a clogged catch basin to be resolved.

Therefore the Council finds that it is appropriate to require semi-annual reporting of catch basin inspection, cleanup and maintenance, including the number of clogged and broken catch basin reports received, by community board, and the time it takes to resolve the complaint.

§2. Section 24-503 of the administrative code of the city of New York is amended by adding a new subdivision f to read as follows:

f. The commissioner of environmental protection shall submit semiannual reports of the citywide catch basin inspection, cleanup, maintenance and repair, disaggregated by community board, to the mayor and the council. Such reports shall include the number of catch basins inspected, the number of clogged catch basins identified, the number of catch basins unclogged or repaired, whether the inspection was responsive to any complaints in the community board and the response time for resolution of any complaints. The commissioner shall also ensure that catch basins are inspected, at a minimum of once every year and are repaired or unclogged at least three days after the receipt of a complaint about a clogged or malfunctioning catch basin.

§3. This local law shall take effect immediately.

Referred to the Committee on Environmental Protection.

Int. No. 241

By Council Members Williams, Koo and Mendez.

A Local Law to amend the administrative code of the city of New York, in relation to borough-specific coordination of snow event response and communication.

Be it enacted by the Council as follows:

Section 1. Chapter 1 of title 16 of the administrative code of the city of New York is amended by adding a new section 16-124.2 to read as follows:

§ 16-124.2 Borough-specific snow event coordinator. a. The commissioner shall designate a department supervisor or manager within each borough who, during a snow event, as such term is defined in paragraph 6 of subdivision a of section 16-124.1 of this chapter shall be responsible for the following:

(1) Implementing the borough-specific snow plan pursuant to section 16-124.1 of this chapter;

(2) Directing communication with the office of emergency management, the commissioner, other relevant agencies and offices, and relevant city employees, non-city workers and private entities involved in snow removal activities within the borough;

(3) Directing communication with borough elected officials and community boards in order to receive and respond to information from such elected officials and community boards regarding snow event conditions, and to provide snow management-related information to such elected officials and community boards; and

(4) Coordinating borough-wide snow removal activities of all relevant agencies and offices, city employees, non-city workers and private entities based on snow event conditions.

All plans issued to the council or the public relating to snow removal shall include the contact information of such designated snow event coordinator for each borough.

§ 2. This local law shall take effect ninety days after enactment.

Referred to the Committee on Sanitation and Solid Waste Management.

Res. No. 150

Resolution calling upon the New York State Legislature to pass and the Governor to sign legislation that would establish a public campaign

financing system for campaigns for the office of New York State Comptroller.

By Council Member Williams.

Whereas, New York State does not currently have a public campaign financing system for candidates running for New York State Comptroller or other statewide public offices; and

Whereas, The current New York State campaign contribution limit for a candidate running in a primary and general election for Comptroller is $60,800, as compared to $5,000 for a United States Presidential candidate; and

Whereas, The current New York State limit on direct corporate contributions to candidates is $5,000, as compared to an absolute ban on such contributions under New York City and federal law: and

Whereas, In 2010, the United States Supreme Court issued a decision in *Citizens United v. Federal Election Commission*, holding that corporations and other groups may engage in unlimited independent spending on elections; and

Whereas, The Supreme Court decision, combined with New York State's current contribution limits and lack of a public campaign financing system, has the potential to hinder electoral competition and increase the risk of corruption by allowing wealthy individuals and corporations to spend large amounts to fund political campaigns; and

Whereas, This is particularly problematic for the office of the Comptroller, since this office is responsible for overseeing the State's multi-billion dollar pension system, including making determinations regarding how these funds are to be invested; and

Whereas, Public campaign financing provides candidates with resources to run competitive races, improves election transparency through more stringent disclosure requirements and reduces the risk of corruption and the appearance of impropriety by decreasing the potential for undue influence from wealthy contributors; now, therefore, be it

Resolved, That the Council of the City of New York calls upon the New York State Legislature to pass and the Governor to sign legislation that would establish a public campaign financing system for campaigns for the office of New York State Comptroller.

Referred to the Committee on State and Federal Legislation.

Int. No. 242

By Council Members Wills, Palma, Arroyo, Ignizio, Cornegy, King and Rosenthal.

A Local Law in relation to reporting of data by the Independent Budget Office regarding the Earned Sick Time Act.

Be it enacted by the Council as follows:

Section 1. a. Independent budget office report. Pursuant to section 260 of the New York city charter, no later than March 31, 2015 and on or before every March 31 thereafter, the independent budget office ("IBO") shall report to the mayor, public advocate, comptroller and the council, and post on its website a report presenting data for the previous calendar year related to the costs and benefits of the earned sick time act, Local Law 46 of 2013 as amended by Local Laws 6 and 7 of 2014. Such report shall include to the extent practicable a comparison of New York city with surrounding counties and large cities comparable to New York City that do not provide sick time, and shall include, to the extent practicable given available data and methodologies, but not be limited to, data regarding:

1. Wage and employment rates.

2. Small business start-up and failure rates, and the number of such businesses 3that were minority or women owned.

3. Infectious disease rates.

4. Complaints received by the department of consumer affairs or any other agency designated by the mayor to administer the earned sick time act regarding alleged violations of the earned sick time act, including:

A. the number of complaints filed against employers, disaggregated by the number of employees of such employers as follows: under 5; 5-10; 11-20; 21-50; 51-100; 101-200; 201-300; 301-500; more than 500;

B. the number of notices of violation issued against employers, disaggregated by the number of employees of such employer as follows: under 5; 5-10; 11-20; 21-50; 51-100; 101-200; 201-300; 301-500; more than 500;

C. the number of complaints resolved through mediation; and

D. the number of complaints resolved by a hearing.

5. Penalties and other relief, including:

A. the total amount of civil penalties ordered paid by employers to the city, including the subtotal of such penalties ordered against small businesses with under twenty employees;

B. the total amount of monetary awards ordered paid by employers to employees, including the subtotal of such awards ordered against small businesses with under twenty employees; and

C. a list of the types of injunctive relief ordered against employers including, but not limited to, reinstatement.

b. The first report shall compare statistics from the period of January 1, 2010 until December 31, 2013 to the period of between April 1, 2014 until December 31, 2014 in order to assess the effect of the earned sick time law on the city, particularly on small businesses. Such comparison shall include, but not be limited to, small business start-up and failure rates and whether start-ups hired on average more or fewer employees prior to the earned sick time act going into effect.

c. Methodology. When reporting the data required by this local law, the IBO director shall ensure that IBO uses appropriate and professionally accepted methodologies for comparing similar data and identifies such methodologies in the report, and shall clearly specify the extent to which the earned sick time act can properly be determined to have had an impact on any of the data analyzed. The report shall be contingent on the availability to IBO of data the IBO director determines to be necessary to complete such report. The IBO director shall be authorized to secure such information, data, estimates and statistics from the agencies of the City as the director determines to be necessary in the preparation of such report, including, but not limited to, the department of the consumer affairs and the department of mental health and mental hygiene, and such agencies shall provide such information to the extent that it is available in a timely fashion.

§ 2. This local law shall take effect immediately.

Referred to the Committee on Civil Service and Labor.

Res. No. 151

Resolution calling upon the United States Department of Justice to fund projects that aid in the protection and location of missing persons with autism.

By Council Members Wills, Cornegy, Torres, Vallone, Barron, Chin, Constantinides, Gentile, Levine, Mendez and Rosenthal.

Whereas, Autism is one of a group of neurodevelopmental disorders, known as autism spectrum disorders, that are characterized by social impairments, difficulties with verbal and nonverbal communication, and repetitive behaviors; and

Whereas, Approximately 30,000 children and teenagers in New York have been identified as having autism; and

Whereas, Nearly half of children with an autism spectrum disorder attempt to wander or bolt from supervised areas, and more than half of those that wander go missing; and

Whereas, In October 2013, Avonte Oquendo, a 14 year-old autistic teenager who had tendency to wander from safe environments, went missing from his school in Queens; and

Whereas, Despite a Citywide effort to locate Avonte, the search ended tragically with the discovery of his remains in January 2014; and

Whereas, The United States Department of Justice operates the Missing Alzheimer's Disease Patient Assistance Program, which provides funds for projects that aid in the protection and location of missing seniors with Alzheimer's; and

Whereas, The Missing Alzheimer's Disease Patient Assistance Program funds local projects that develop outreach programs to increase awareness regarding the needs of missing persons with Alzheimer's, implement processes for aiding in the location of lost persons with Alzheimer's, and provide training to local law enforcement agencies; and

Whereas, Seniors with Alzheimer's tend to wander and go missing, similar to those with autism, and are at a serious risk of injury or death if they are not located quickly; and

Whereas, Establishing a program for children with autism modeled upon the Missing Alzheimer's Disease Patient Assistance Program could benefit thousands of families with autistic children in New York City; and

Whereas, There is an urgent need to increase awareness regarding missing persons with autism and to develop systems for ensuring the timely location of children with autism that go missing; and

Whereas, Federal funding for such programs could help to prevent future tragedies like the death of Avonte Oquendo; now, therefore, be it

Resolved, That the Council of the City of New York calls upon upon the United States Department of Justice to fund projects that aid in the protection and location of missing persons with autism.

Referred to the Committee on Health.

Preconsidered L.U. No. 38

By Council Member Ferreras:

Section 202 Supportive Housing Program For The Elderly, Artsbridge Senior Housing 1446-1458 Plimpton Avenue & 1416-1426 Edward L. Grant Highway, Bronx, Community District No. 4, Council District No. 16.

Adopted by the Council (preconsidered by the Committee on Finance).

L.U. No. 39

By Council Member Greenfield:

Application no. 20145305 TCM, pursuant to §20-226 of the Administrative Code of the City of New York, concerning the petition of Seven A Café Inc., for a revocable consent to continue to maintain and operate an unenclosed sidewalk café located at 109 Avenue A, in the Borough of Manhattan, Community District 3, Council District 2.

Referred to the Committee on Land Use and the Subcommittee on Zoning and Franchises.

L.U. No. 40

By Council Member Greenfield:

Application no. 20145306 TCM, pursuant to §20-226 of the Administrative Code of the City of New York, concerning the petition of Mama Bar LLC, d/b/a Mama Bar, for a revocable consent to establish, maintain and operate an unenclosed sidewalk café located at 32 Avenue B, in the Borough of Manhattan, Community District 3, Council District 2. This application is subject to review and action by the Land Use Committee only if called-up by vote of the Council pursuant to Rule 11.20b of the Council and §20-226(e) of the New York City Administrative Code.

Referred to the Committee on Land Use and the Subcommittee on Zoning and Franchises.

L.U. No. 41

By Council Member Greenfield:

Application No. C 130336 ZMM submitted by 606 W. 57 LLC pursuant to Sections 197-c and 201 of the New York City Charter for an amendment of the Zoning Map, Section No. 8c, changing M1-5 and M2-3 districts to a C4-7 district, in the Borough of Manhattan, Community District 4, Council District 6.

Referred to the Committee on Land Use and the Subcommittee on Zoning and Franchises.

L.U. No. 42

By Council Member Greenfield:

Application No. C 130339 ZSM submitted by 606 W. 57 LLC pursuant to Sections 197-c and 201 of the New York City Charter for the grant of a special permit pursuant to Sections 13-45, 13-451 and 13-454 of the Zoning Resolution to allow a public parking garage with a maximum capacity of 500 spaces, on portions of the ground floor, P1, P2, and P3 levels of a proposed mixed use development on property located at 606 West 57th Street, (Block 1104, Lots 31, 40, 44 and 55), in a C4-7 District, within the Special Clinton District, Borough of Manhattan, Community District 4, Council District 6. This application is subject to review and action by the Land Use Committee only if appealed to the Council pursuant to 197-d(b)(2) of the Charter or called up by a vote of the Council pursuant to 197-d(b)(3) of the Charter.

Referred to the Committee on Land Use and the Subcommittee on Zoning and Franchises.

L.U. No. 43

By Council Member Greenfield:

Application No. C 130337 ZRM submitted by 606 W. 57 LLC c/o TF Cornerstone Inc. pursuant to Section 201 of the New York City Charter, for an amendment of the Zoning Resolution relating to Article IX, Chapter 6 (Special Clinton District), and Appendix F concerning regulation in Northern Subarea C1 and Inclusionary Housing designated areas in the Borough of Manhattan, Community District 4, Council District 6.

Referred to the Committee on Land Use and the Subcommittee on Zoning and Franchises.

At this point the Speaker (Council Member Mark-Viverito) made the following announcements:

ANNOUNCEMENTS:

Thursday, March 27, 2014

10:00 a.m. Fire & Criminal Justice Services Committee – Council Chambers – City Hall

10:00 a.m. **Fire/Emergency Medical Service**
12:00 p.m. **Department of Probation**
12:30 p.m. **Department of Correction**
1:30 p.m. **Office of Emergency Management**
2:15 p.m. **Legal Aid / Indigent Defense Services**
3:00 p.m. **Public**

10:00 a.m. Mental Health, Developmental Disabilities, Alcoholism, Drug Abuse & Disability Services Committee – Committee Room – City Hall

10:00 a.m. **Department of Health & Mental Hygiene (joint with Subcommittee on Drug Abuse)**
11:30 a.m. **Public**

1:00 p.m. Parks & Recreation Committee – Committee Room – City Hall

1:00 p.m. **Department of Parks & Recreation (Expense)**
2:30 p.m. **Department of Parks & Recreation (Capital)**
3:00 p.m. **Public**

Committee on **CIVIL SERVICE AND LABOR ..... 1:00 P.M.**
Oversight - The school bus industry in the aftermath of the removal of Employee Protection Provisions from contracts and its impact on workers
Committee Room – 250 Broadway, 16th Floor ..... I. Daneek Miller, Chairperson

Friday, March 28, 2014

★ ***Addition***
Committee on **WATERFRONTS.....10:00 A.M.**
Oversight - An Update on the City's Comprehensive Waterfront Plan as it Relates to Expanding Public Access to the City's Waterfront
Committee Room – City Hall .....Deborah Rose, Chairperson

Monday, March 31, 2014

★ ***Addition***
Committee on **RECOVERY AND RESILIENCY** jointly with the
Committee on **ENVIRONMENTAL PROTECTION** and
COMMITTEE ON HOUSING AND BUILDINGS.. .....10:00 a.m.
Oversight - Housing Recovery Post-Sandy: The Status of the Build-It-Back Program
Council Chambers – City Hall ..... Mark Treyger, Chairperson
.....Donovan Richards, Jr., Chairperson
..... Jumaane D. Williams, Chairperson

★ ***Addition***
Committee on Veterans..... 1:00 p.m.
Res 143 - By Council Member Ulrich – **Resolution** calling upon the New York State Legislature to pass, and the Governor to sign S.1707 and A.4098, legislation establishing a veterans tax credit for businesses that hire veterans and disabled veterans.
Committee Room – City Hall..... Eric Ulrich, Chairperson

Tuesday, April 1, 2014

★ ***Note Location Change***
Subcommittee on **ZONING & FRANCHISES.....9:30 A.M.**
See Land Use Calendar
Council Chambers – City Hall ..... Mark Weprin, Chairperson

★ ***Note Location Change***
Subcommittee on **LANDMARKS, PUBLIC SITING & MARITIME USES.....11:00 A.M.**
See Land Use Calendar
Committee Room – City Hall..... Peter Koo, Chairperson

★ ***Note Location Change***
Subcommittee on **PLANNING, DISPOSITIONS & CONCESSIONS..... 1:00 P.M.**
See Land Use Calendar

Committee Room – City Hall .....Inez Dickens, Chairperson

Wednesday, April 2, 2014

★ ***Addition***

Committee on **HOUSING AND BUILDINGS .....10:00 A.M.**

Int 13 - By Council Member Koslowitz, Chin, Constantinides, Koo, Levin, and Palma - **A LOCAL LAW** - To amend the administrative code of the city of New York, in relation to requiring the base building systems of certain buildings to be operated by individuals with a certificate in building energy efficiency from an approved program.

Int 14 - By Council Member Levin, Constantinides, Koo, Levine, Palma, Johnson, and Mendez - **A LOCAL LAW** - To amend the New York city mechanical code, in relation to requiring analysis of heating and cooling needs during building design.

Int 16 - By Council Members Levin, Chin, Koo, Palma, Williams, Johnson, Mendez and Richards - **A LOCAL LAW** - To amend the administrative code of the city of New York, in relation to requiring insulation of existing concealed pipes exposed during alterations or repair.

Int 93 - By Council Members Matteo, Ignizio, Gentile, Rose, Richards and Rosenthal (by request of The Staten Island Borough President) - **A LOCAL LAW** - To amend the New York city building code, in relation to requiring the use of mold-resistant gypsum board and cement board in moisture-prone locations.

Int 181 - By Council Members Williams, Chin, Johnson, Koo, Torres and Rosenthal - **A Local Law** to amend the New York city charter and the administrative code of the city of New York, in relation to community board review of hotel development plans.

Int 184 - By Council Member Chin - **A LOCAL LAW** - To amend the administrative code of the city of New York, in relation to the allowable maximum heat loss through building walls.

Int 202 - By Council Member Koo - **A Local Law** to amend the administrative code of the city of New York, in relation to public access stairways.

Int 203 - By Council Member Koo - **A Local Law** to amend the administrative code of the city of New York, the New York city building code and the New York city fire code, in relation to hold-open devices and automatic closing of exit doors serving vertical exit enclosures.

Preconsidered Int____ - By Council Member Levin - **A LOCAL LAW** - To amend the administrative code of the city of New York and the New York city energy conservation code, in relation to system commissioning.

Preconsidered Int____ - By Council Member Levin - **A LOCAL LAW** - To amend the New York city building code, in relation to construction site lighting.

Preconsidered Int____ - By Council Member Mendez (by request of the Manhattan Borough President) - **A LOCAL LAW** - To amend the administrative code of the city of New York and the New York city building code, in relation to protecting street trees during construction activities.

Council Chambers – City Hall ..... Jumaane D. Williams, Chairperson

Thursday, April 3, 2014

Committee on **RULES, PRIVILEGES & ELECTIONS .....10:30 A.M.**

M 35 - Communication from the Mayor - Submitting the name of **Meera Joshi** to the Council for its advice and consent regarding her appointment as a member of the New York City Taxi and Limousine Commission, Pursuant to Sections 31 and 2301 of the City Charter.

AND SUCH OTHER BUSINESS AS MAY BE NECESSARY

Committee Room – 250 Broadway, 16th Floor ..... Brad Lander, Chairperson

Committee on Land Use.....11:00 a.m.

All items reported out of the subcommittees

AND SUCH OTHER BUSINESS AS MAY BE NECESSARY

Committee Room – City Hall .....David G. Greenfield, Chairperson

Tuesday, April 8, 2014

Committee on **EDUCATION .....10:00 A.M.**

Agenda to be announced

Council Chambers – City Hall .....Daniel Dromm, Chairperson

Subcommittee on **SENIOR CENTERS.....10:00 A.M**.

Oversight – Culturally relevant meal services for seniors

Committee Room – City Hall .....Paul Vallone, Chairperson

Wednesday, April 9, 2014

Committee on **PUBLIC HOUSING .....1:00 P.M.**

Agenda to be announced

Committee Room – City Hall .....Ritchie Torres, Chairperson

Thursday, April 10, 2014

Stated Council Meeting..... Ceremonial Tributes – 1:00 p.m.
.....Agenda – 1:30 p.m.

Whereupon on motion of the Speaker (Council Member Mark-Viverito), the Public Advocate (Ms. James) adjourned these proceedings to meet again for the Stated Meeting on Thursday, April 10, 2014.

MICHAEL M. McSWEENEY, City Clerk
Clerk of the Council

Editor's Local Law Note: *Int No. 1-A, adopted by the Council at the February 26, 2014 Stated Meeting, was signed into law by the Mayor on March 20, 2014 as Local Law No. 7 of 2014. Int No. 98, also adopted by the Council at the February 26, 2014 Stated Meeting, was signed into law by the Mayor on March 21, 2014 as Local Law No. 8 of 2014.*