ATTACHMENT # 4
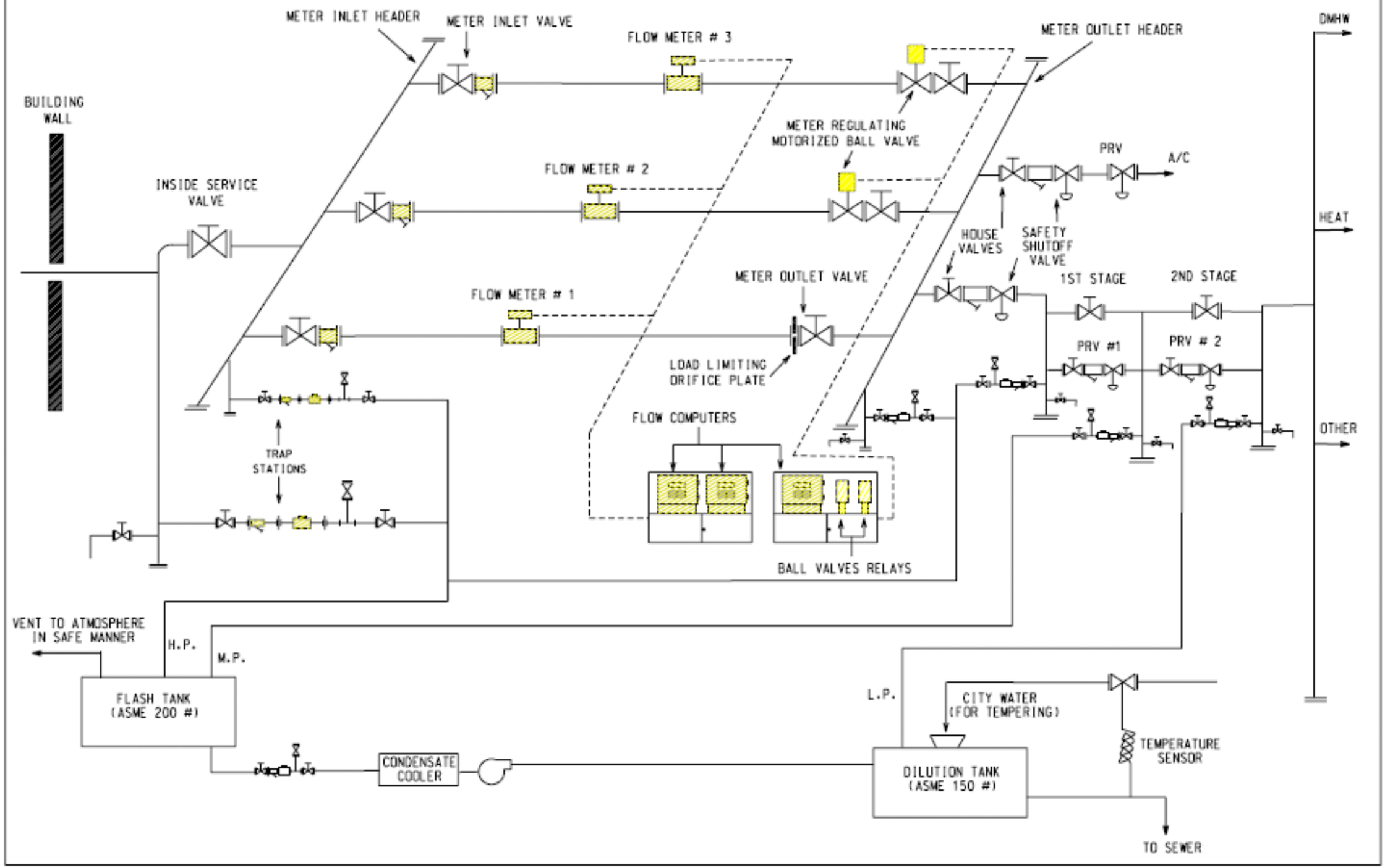
TYPICAL STEAM METER STATION LAYOUT
(FOR INFORMATION ONLY)